EMPIRICAL PRECISION

THE HANDLOADING HANDBOOK — AMMUNITION MANUFACTURING AND FUNCTION TESTING

In This Book

Two standalone companion handbooks that can be read in any order:

- ***Empirical Precision: The Handloading Handbook — Ammunition Manufacturing and Function Testing*** *(this book).* Parts I to VI cover foundations, equipment, components, load research, assembly, function testing, records, and troubleshooting. Parts VII to IX are the Components Quick Reference, and Part X holds the Simulated Load Ladders across 131 rifle cartridges.
- ***Empirical Precision: The Precision Rifle Handbook — Shooting Accuracy, Ballistics, and Cartridge Evaluation.*** Rifle systems, optics, marksmanship, fieldcraft, cartridge evaluation, statistical group analysis, external ballistics, hit probability, and terminal performance.

EMPIRICAL PRECISION

THE HANDLOADING HANDBOOK — AMMUNITION MANUFACTURING AND FUNCTION TESTING



LE Precision

Empirical Precision: The Handloading Handbook — Ammunition Manufacturing and Function Testing

First Edition

The Easier on EP boxes in this edition refer to Empirical Precision as of November 2026.

Published by LE Precision

© 2026 LE Precision. This book is licensed under the Creative Commons Attribution-NonCommercial-NoDerivatives 4.0 International License (CC BY-NC-ND 4.0). You may copy and share it in any medium, unchanged and not for sale, with credit to LE Precision. Anything beyond that needs written permission from the publisher. The license is at creativecommons.org/licenses/by-nc-nd/4.0. Quoted material remains its owners' and is not covered by this license.

Disclaimer. In Parts I to VI and the Appendices, every worked example is labeled as example numbers and is not load data. The tables in Part X are simulated predictions computed on 11 November 2026 with the Ignition internal ballistics engine, which is fitted to the published load data of Alliant, Barnes, Berger, Federal, Hodgdon, Hornady, Lyman, Nosler, Reload Swiss, Shooters World, Sierra, Speer and Vihtavuori. They show how closely the engine follows tested load data, and they are not load data. The burn rate order in Part VIII is relative. It is never a basis for substituting one powder for another. Check the dimensions and pressure limits in Part IX against the current SAAMI or C.I.P. standard. Handloading uses flammable and explosive materials at high pressure. The author and the publisher have no control over the firearms, components, equipment or methods used by the reader. This information is provided as is, without warranty of any kind, and the reader assumes all risk in using it. The author and the publisher disclaim all liability for injury, death or damage arising from its use. Always start from the component maker's current published data for your exact components. Pressures and velocities predicted by any software, Empirical Precision included, are predictions. They are not measurements and they are not load data. Read Before You Begin and Chapter 2 before you load.

No affiliation. This book is not affiliated with any maker of firearms, ammunition, components or reloading tools. Apart from the Empirical Precision app, which shares its author, it is not affiliated with any publisher of load data or ballistic software. No maker or publisher has endorsed it, sponsored it or paid for any mention in it. Company and product names appear only to identify a source or as examples among several makers. They are trademarks of their owners.

Contents

Before You Begin ... viii
How to Use This Book ... x

Part I. Foundations ... 1

Chapter 1. Why Handload, and Why Measure ... 2
Chapter 2. Safety in the Workshop, at the Range and in Storage ... 7
Chapter 3. The Rifle as a System ... 13
Chapter 4. How a Cartridge Works ... 24

Part II. Equipment ... 30

Chapter 5. Presses and Dies ... 33
Chapter 6. Case Cleaning Tools ... 38
Chapter 7. Case Preparation and Priming Tools ... 40
Chapter 8. Scales and Powder Measures ... 44
Chapter 9. Measuring Tools ... 47
Chapter 10. Range Equipment ... 49

Part III. Components ... 52

Chapter 11. Brass ... 53
Chapter 12. Primers ... 58
Chapter 13. Powders ... 62
Chapter 14. Bullets ... 70

Part IV. Load Research ... 75

Chapter 15. Reading Published Load Data ... 76
Chapter 16. Planning the Load ... 79

Part V. Load Assembly ... 84

Chapter 17. The Workshop and the Order of Operations ... 85
Chapter 18. Inspecting and Cleaning Cases ... 89
Chapter 19. Sizing and Shoulder Bump ... 94
Chapter 20. Trimming and Chamfering ... 102
Chapter 21. Annealing ... 108
Chapter 22. Primer Pockets and Priming ... 112
Chapter 23. Charging ... 117
Chapter 24. Seating ... 121
Chapter 25. Finishing, Labeling and Storage ... 129
Chapter 26. Loading for Semi-Automatic Rifles ... 133

Part VI. Function Testing, Records, and Troubleshooting ... 139

Chapter 27. Keeping Records ... 140
Chapter 28. Working Up Safely ... 148
Chapter 29. Popular Methods Examined ... 154
Chapter 30. Living With a Load ... 159
Chapter 31. Troubleshooting ... 165

Part VII. Projectile Directory ... 175

.224 Caliber (5.56mm) Projectiles ... 175
.243 Caliber (6mm) Projectiles ... 178
.257 Caliber (6.35mm) Projectiles ... 181
.264 Caliber (6.5mm) Projectiles ... 182
.277 Caliber (6.8mm) Projectiles ... 185
.284 Caliber (7mm) Projectiles ... 187
.308 Caliber (7.62mm) Projectiles ... 189
.323 Caliber (8.2mm) Projectiles ... 195
.338 Caliber (8.6mm) Projectiles ... 196
.358 Caliber (9.1mm) Projectiles ... 198
.375 Caliber (9.5mm) Projectiles ... 198
.458 Caliber (11.63mm) Projectiles ... 199

Part VIII. Powders ... 201

Part IX. Cartridge Dimensions and Pressure Standards ... 205

Part X. Simulated Load Ladders ... 208

.224 Caliber (5.56mm)

.218 Bee ... 209
.219 Zipper ... 212
22 ARC ... 214
.22 BR Remington ... 218
22 Creedmoor ... 223
.22 Hornet ... 227
22 Nosler ... 229
.22 PPC USA ... 235
.22-250 Remington ... 237
.220 Swift ... 243
.222 Remington ... 248
.222 Remington Magnum ... 251
.223 Remington ... 254
.223 WSSM ... 259
.224 Valkyrie ... 264
.224 Weatherby Magnum ... 268
.225 Winchester ... 271
5.56x45mm NATO ... 274

.243 Caliber (6mm)

24 Nosler ... 277
.240 Weatherby Magnum ... 280
.243 Winchester ... 285
.243 WSSM ... 291
6 GT ... 298
6mm ARC ... 304
6mm BR ... 309
6mm Creedmoor ... 315
6mm Dasher ... 321
6mm PPC ... 325
6mm Remington ... 330
6mm XC ... 336
6mm-284 ... 341
6x45 (6mm-223) ... 347
6x47 Lapua ... 353

.257 Caliber (6.35mm)

25 Creedmoor ... 358
.25 WSSM ... 361
.25-06 Remington ... 363
.25-20 Winchester ... 366
.250 Savage ... 367
.256 Winchester Magnum ... 370
.257 Roberts ... 372
.257 Weatherby Magnum ... 375

.264 Caliber (6.5mm)

26 Nosler ... 378
.260 Remington ... 381
.264 Winchester Magnum ... 384
6.5 Creedmoor ... 388
6.5 Grendel ... 391
6.5 PRC ... 394
6.5-284 Norma ... 396
6.5-300 Weatherby Magnum ... 399
6.5mm BR Remington ... 400
6.5mm Carcano ... 403
6.5mm Remington Magnum ... 406
6.5mm-06 ... 408
6.5x47 Lapua ... 411
6.5x50 Japanese ... 414
6.5x55 Swedish ... 417
6.5x57 Mauser ... 420

.277 Caliber (6.8mm)

.270 Weatherby Magnum ... 423
.270 Winchester ... 426
.270 WSM ... 429
6.8 Western ... 431
6.8mm Remington SPC ... 433

.284 Caliber (7mm)

28 Nosler ... 436
.280 Ackley Improved ... 441
.280 Remington ... 444
.284 Winchester ... 448
7-30 Waters ... 451
7mm BR Remington ... 455
7mm PRC ... 459
7mm Remington Magnum ... 462
7mm Remington SAUM ... 467
7mm RUM ... 471
7mm STW ... 475
7mm Weatherby Magnum ... 479
7mm WSM ... 483
7mm-08 Remington ... 487
7x57 Mauser ... 491
7x64 Brenneke ... 495
7x65R ... 498

.308 Caliber (7.62mm)

.30 AR Remington 500
.30 BR Remington 502
30 Nosler 505
.30 TC 509
.30-06 Springfield 512
.30-06 Springfield Ackley Improved 517
.30-30 Winchester 521
.30-378 Weatherby Magnum 524
.30-40 Krag 528
300 Blackout 532
.300 H&H Magnum 536
.300 Norma Magnum 541
300 PRC 545
.300 Remington SAUM 549
.300 Remington Ultra Magnum 554
.300 Ruger Compact Magnum 559
.300 Savage 563
.300 Weatherby Magnum 566
.300 Winchester Magnum 571
.300 WSM 576
.308 Marlin Express 581
.308 Norma Magnum 584
.308 Winchester 589
7.5x55 Swiss 594

.323 Caliber (8.2mm)

.325 WSM 597
8mm Remington Magnum 600
8mm-06 603
8x57 IRS 605
8x57 IS (8mm Mauser) 607

.338 Caliber (8.6mm)

33 Nosler 610
338 ARC 614
.338 Federal 616
.338 Lapua Magnum 619
.338 Norma Magnum 623
.338 Remington Ultra Magnum 626
.338 Ruger Compact Magnum 630
.338 Winchester Magnum 633
.338-06 637
.338-378 Weatherby Magnum 640
.340 Weatherby Magnum 644

.358 Caliber (9.1mm)

.35 Remington 648
.35 Whelen 650
.350 Remington Magnum 652
.356 Winchester 654
.358 Norma Magnum 656
.358 Winchester 658

.375 Caliber (9.5mm)

.375 Holland & Holland Magnum 660
.375 Remington Ultra Magnum 663
.375 Ruger 666
.375 Weatherby Magnum 669
.378 Weatherby Magnum 671

.458 Caliber (11.63mm)

.460 Weatherby Magnum 673

Reference 675

Conversions 675
Appendix A. Statistics and Formulas Reference Sheet 675
A.1 Workshop and target formulas 675
Appendix B. Safety Card 677

Manufacturers and Data Sources 678

Notes 679

Glossary 687

Sources 689

Index 695

Before You Begin

These rules apply to every load you make. Read them before your first session. They are repeated as a card in Appendix B.

In the workshop

1. Load only when you can give the job your full attention. Never load when tired, ill, hurried or after drinking.
2. Wear safety glasses whenever you load.
3. Keep one powder and one primer type on the workbench. Put everything else away.
4. Use published load data for your exact components. Never substitute a powder because its name or its place on a burn chart looks similar. Never load a powder you cannot identify.
5. Start every new load at the published start load, never below it, and work up in small steps. If a source lists only a maximum, start at least 10 percent below it. Never exceed a published maximum.
6. Work up again from the start load if you change the primer, case maker, bullet, powder, barrel or barrel length. For a new lot of the same component, record the lot and load 10 check rounds. If your charge is at or near the published maximum, load those check rounds one step lower. Load in bulk only after the check at the range.
7. Discard cases with an incipient head separation ring, a split or an enlarged, loose primer pocket. Never load a case longer than its maximum case length.
8. Verify your scale with a check weight at the start of every session.
9. Look into every charged case under good light before you seat a bullet. A double charge or an empty case must never leave the workshop.
10. If you seat a bullet deeper than the published cartridge overall length (COAL), deeper than your recipe, or into the lands (the raised ribs of the rifling), treat it as a new load and work up again from the start load. Measure the cartridge base to ogive (CBTO) and the COAL. Do not guess.
11. At the end of each session, return unused powder to its original container and empty the powder measure completely.

At the range

12. Wear eye and ear protection.
13. Fire the steps of a work-up in order, lowest first, and chronograph every shot. Stop at the published maximum charge or at your velocity ceiling, whichever comes first. Your velocity ceiling is the published velocity at the maximum charge, lowered for a shorter barrel but never raised for a longer one. Stop at a step that gains far more velocity than the steps before it. After any stop, take the unfired rounds home and pull their bullets. Chronograph a new lot's check rounds and compare their velocity with your records. If they run faster by more than twice the noise, the amount two averages can differ by chance (see Chapter 30), lower the charge and work up again from below.
14. Stop at once at any pressure sign. Signs include a stiff bolt lift, an ejector mark and a flattened, cratered or pierced primer. In a semi-automatic, an ejector mark is a sign

when it is new or heavier than at the start load (see Chapter 26). The absence of signs does not prove a load is safe.

15. Keep loaded rounds out of the sun and out of a hot chamber. A load near the maximum on a mild day has no margin left for a hot day.
16. If a shot sounds or feels wrong, stop. Unload the rifle and check the bore for a stuck bullet before you fire again. If a round fails to fire, keep the muzzle downrange for at least 30 seconds before you open the action.

In storage and afterward

17. Store powder and primers in their original containers, cool and dry, away from heat, flame and children. Never store powder in a sealed or strong container such as a gun safe. Wash your hands and face after loading, shooting or handling fired cases. Do not eat, drink or smoke until you have washed.

With any software prediction

18. Every predicted pressure is for learning. It is never intended to replace published data. Never change a model's powder settings to match your chronograph, since that moves its predicted pressure too.

How to Use This Book

What you will learn

You will learn to handload bottleneck rifle cartridges for bolt-action and semi-automatic rifles. You will learn every step for the workshop and every step for the range, and how to make each decision with measured data. The work ends with safe, functional ammunition that meets your velocity and consistency expectations, handing off to *The Precision Rifle Handbook* for extended statistical evaluation, external ballistics, DOPE cards, and hit probability.

What is not covered

Handgun cartridges, straight-wall rifle cartridges, shotshells and cast bullets are not covered. The methods for measuring and comparing loads still apply to them. The workshop steps and the pressure rules differ. Use a reloading manual with specific steps for those cartridges.[1]

Where to start

Start at Chapter 1. Each chapter builds on the ones before it. Where a step uses a later chapter, a cross-reference names it. Later, turn to whichever chapter fits the job at hand. Chapter 2 holds the safety rules behind every step. Do not skip it.

Some jobs need only part of the book first:

- Before you load your first round, read Chapters 2 to 25, 28, and 30. For a semi-automatic, add Chapter 26.
- Before you work up a load, read Chapters 2, 15, 16, 27, 28, and 30. For a semi-automatic, add Chapter 26.
- For a hunter needing a safe load and a DOPE card, read Chapters 2, 15 to 25, 27, 28, and 30, then turn to *The Precision Rifle Handbook* Chapters 10, 11, 18, 20, and 22.
- Before you choose between loads, read Chapters 27 to 29, then *The Precision Rifle Handbook* Chapters 14 to 16.
- Before you shoot at distance, read *The Precision Rifle Handbook* Chapters 18 to 21.
- When a lot, the season or the barrel changes, read Chapter 30.
- When something goes wrong, start at Chapter 31.

This is how it is done. This is how it is easier on EP.

Empirical Precision (EP) is a reloading and ballistics app at empiricalprecision.com. It works offline and needs no account. Your data stays on your device unless you choose to send it. EP is free and open source, so there will never be a charge to use it.

Each method is taught in full with step-by-step instructions. Where there is math, you also get the formulas and a worked example. You can do every job with a notebook, a calculator or a spreadsheet (except the drop chart, which needs a ballistic solver). Where EP can do the same job, an *Easier on EP* box says which of its tools does it and what you get. Each box

includes a QR code and a direct link to that page. EP is a tool like a tumbler or a chronograph but never a requirement.

How each chapter is built

Chapters 1 to 31 use the same parts in the same order, so you always know where to look. The boxes appear only where they apply.

- **Key points.** The main ideas kept brief.
- **Why it matters.** The physics or the risk in plain words.
- **How it is done.** The full method. Workshop and range tasks come as numbered steps. Math comes with formulas and a worked example.
- **Safety boxes.** Warnings that prevent injury or rifle damage, cross-referenced to Chapter 2.
- **Evidence boxes.** What the data says about contested or unproven claims.
- **Easier on EP boxes.** The EP tool for the same job with a QR code and direct link.

Chapter 31 ends with short answers to common questions. Each answer points to the chapter that teaches the method in full.

Unit conversions, Appendices A and B, the manufacturer directory, the notes for each chapter, the glossary, the sources and the master index are at the back of the book. A small raised number in the text points to its note.

Safety tags

Never ignore a safety rule. A **Safety · See Chapter 2** box marks a step where a mistake can damage the rifle or hurt you.

Evidence tags

Handloading carries a lot of habit and dogma. Some of it is proven. Some of it is plausible. Some of it is wrong. This manual gives each technique with an open evidence question one of three evidence tags.

Tag	What it means
Evidence · Supported by data	Controlled tests or large samples support it. A note gives the source.
Evidence · Plausible but unproven	The physics suggests it may help. No public test with enough shots has shown it.
Evidence · Folklore	Tested and not supported, or at odds with the physics.

Contested topics follow one pattern: the claim, the physics, the test, the data and the verdict. A tag can change when new data arrives. Your own data counts too. You can test a claim yourself with enough shots to settle it (see *The Precision Rifle Handbook*).

Figures

Figures are simple drawings and charts, numbered by chapter. For example, Figure 19-2 is the second figure in Chapter 19.

Example numbers and units

Worked examples use velocities, group sizes and measured lengths. They never use a charge weight for a real cartridge, bullet and powder. Every example is labeled “Example numbers. Not load data.”

Charges are in grains (gr) and velocities in feet per second (fps). Lengths in the text read like “.002 inch”. Pressures are in psi. SAAMI and C.I.P. are the two bodies that set cartridge standards, and C.I.P. states its limits in bar (see Chapter 4). Part IX gives a C.I.P. limit in bar. The Part X tables give every pressure in psi, C.I.P. cartridges included. Cross-references read like “(see Chapter 28)”.

In formulas, × means times, ÷ means divided by, x^2 means x squared, √ means the square root and Σ means the sum of. ≈ means about equal to and ± means plus or minus. π, read pi, is about 3.1416, and sin(x) is the sine of the angle x. A power that is not a whole number uses ^, so x^1.83 is x to the power 1.83, and exp(x) is e to the power x. σ, read sigma, is a standard deviation. Spreadsheet formulas keep the spreadsheet’s own symbols, such as * and SQRT().

Parts VII to X · Component reference and simulated ladders

Parts VII, VIII and IX contain the projectile directory, the combined propellant specifications, the relative burn rate order table, and the SAAMI and C.I.P. cartridge dimensions and pressure limits.

Part X holds the simulated load ladders from the Ignition internal ballistics engine. Each cartridge opens with a short history and a specification card from the SAAMI or C.I.P. standard. Next are tables ordered by bullet weight that include the cartridge overall length (COAL), representative bullet length, seating depth and usable and total case water capacity.

Each row in the table shows simulated charge and velocity at five steps, from step 1 (90 percent of step 5) to step 5 (the limit). Step 5 also includes simulated peak pressure in psi and case fill. Step 5 stops where predicted pressure reaches the SAAMI limit or the powder fills 105 percent of usable case capacity, whichever comes first. Where SAAMI sets no limit, step 5 uses the C.I.P. limit converted to psi. A fill over 100 percent is a compressed charge. The rows are predictions, not load data. Part X opens with how these simulations are computed and how to compare them against published manuals. Always develop your load from the component maker’s current published data, starting at the published start load and never exceeding the published maximum (see Chapters 15 and 28). Check the errata of the manual you load from and the component makers’ online data for anything newer than your copy.

Part I

Foundations

Before you load a round, learn why you measure and why a few shots mislead (Chapter 1). Learn the safety rules and the mistake each one prevents (Chapter 2). Know your rifle: its barrel, its measurements and its hardware, recorded and locked (Chapter 3). Then see how a cartridge fires in that rifle and what limits its pressure (Chapter 4). Bullet stability and external flight physics are covered in *The Precision Rifle Handbook*.

Chapter 1. Why Handload, and Why Measure 2
Chapter 2. Safety in the Workshop, at the Range and in Storage 7
Chapter 3. The Rifle as a System 13
Chapter 4. How a Cartridge Works 24

Chapter 1

Why Handload, and Why Measure

Key points

- People handload for precision, for supply, for a specific fit to one rifle and for understanding.
- A 3-shot group is a tiny sample. It can make a poor load look good and a good load look poor.
- The Law of Large Numbers: an average settles only as the number of shots grows.
- Evidence means enough recorded impacts from one rifle, measured by one method, and an honest statement of the uncertainty.
- The workflow runs from the firearm to impacts on the target. Its steps are equipment and components, research, assembly, work-up, testing and records, and adjustment. It loops back to research when the recipe changes.

Why it matters

People handload for good reasons.

- **Precision.** You choose the bullet, the powder and the seating depth. You assemble every round to a written recipe and measure the result to reduce spread and uncertainty.
- **Supply.** Factory ammunition for a cartridge can be scarce or missing. Components often remain. You can also load combinations that no factory sells.
- **Fit to one rifle.** You size brass to your own chamber and seat bullets to your own throat. You choose bullets that your barrel's twist will stabilize.
- **Understanding.** Each step teaches you what one variable does. You stop guessing why a rifle shoots the way it does.

Some people start handloading to save money. Loading in bulk with budget components can do that. Precision handloading is not likely to. Its reward is the result.

All four reasons share one weak spot. Handloading gives you many choices, and every choice invites a test. Many range tests are too small to answer the question they ask. A handloader changes one thing, fires 3 shots and sees a smaller group. The change seems to work. It may have done nothing. The group may have been small by chance.

Telling the difference takes measurement. Real-world analysis is neither cheap nor easy. Many mid-priced modern rifles already shoot very well with factory ammunition. Improving on that takes time, discipline and often a lot of money. There are no shortcuts, gadgets, lucky charms or rituals that allow you to skip the process. Treat measurement as an essential skill.

From three shots to evidence

My father had me zero my own rifle one afternoon. I remember that day fondly. We used a simple method that nobody questioned. Fire 3 shots. Adjust the scope. Repeat until the shots were "dead nuts on." Maybe throw out a few "flyers" I must have pulled. We left the range with a little less than half a box of .30-30 Winchester ammunition still in its yellow cardboard box. It was a rite of passage, and it "just worked."

For years I carried that tradition forward. I relied on 3-shot and 5-shot groups to tell me everything I thought I needed to know about a rifle. The process was cheap, it was simple and it "just worked." It was the way it had always been done.

Time passed. The targets stretched farther out and the rifles changed. The old ways began to show their cracks. But the process still "just worked." Didn't it?

Then the internet arrived. It brought a flood of forum posts, competing theories and endless arguments. Everyone had a system. Many claimed theirs was the only system that "just worked."

I met a competition shooter at the range. I was intrigued. I always knew those shooters existed (F-Class, benchrest and the like). I just thought they were good ol' boys with more money than sense, playing with shiny rifles and reloading to save money. It turned out they were much more serious than I could have imagined. They were the real deal. They all had a system too, and it "just worked."

That caused the first reckoning in me. Being told a process "just worked" was no longer good enough. I wanted to know exactly how well it worked. I wanted to know how well one process works compared to another. I wanted to know how to change my process so it works better. And I wanted to know whether a change actually made an improvement.

Then I had a second reckoning. I made a pan of cheap weeknight lasagna. I took a square from the corner. It was as close to perfect as any I have ever made. It was browned on top, with crispy cheese on the sides. It was not too sloppy and not too dry. It was just what I wanted. Then I got a second cut from near the center. It was still cold. The cheese was not even melted. How could this be? The answer was obvious. I had no right to call my lasagna perfect on the strength of one square cut from my favorite corner. A 3-shot group is that corner square.

Those early range days are a great memory. They are one of my favorites. But what worked for an old .30-30 with ammunition from the local hardware store was not working for me anymore. As the saying goes, "In God we trust; all others must bring data."[1] So let's go get some data.

How it is done

Anecdote versus evidence

An anecdote is an observation offered as proof. "This load shoots" after only one small group is an anecdote. Anecdotes are not lies. They are claims resting on samples too small to back them up.

Evidence has four marks: enough shots to answer the question asked, every shot recorded (including the ones you dislike), the same method of measurement for every load, and an honest statement of the uncertainty that remains.

Extraordinary claims require extraordinary evidence. "My rifle groups well at 100 yards" is a modest claim that only needs a modest sample of shots. "This 0.1 gr change halved my group size" is an extraordinary claim. Large tests rarely find effects that big from changes that small (see Chapter 29). Before you believe it, you need enough shots to rule out everything else, including luck (see *The Precision Rifle Handbook*).

The Law of Large Numbers

The Law of Large Numbers says that the average of a sample moves toward the true average as the sample grows. Short runs are noisy and obscure the truth. Long runs settle toward the truth. Three examples from outside shooting show how strong the effect is.

The casino. A gambler bets on black at a roulette table and wins three times in a row. In that sample of three, black has won every time. Should the gambler assume he has found a winning method? The casino is not worried. An American wheel has 38 pockets, and 18 of them are black. Over the long run, black wins 47.4 percent of spins. Over 10,000 spins, the share of black settles close to that figure. The house keeps its edge of about 5.26 percent on every even-money bet.

The shooting parallel. A 3-shot group is the gambler's three wins. It feels like a winning method. It may be a lucky cluster of noise.

The coin. Flip a fair coin 10 times. Eight heads and two tails is an ordinary result. A split of 8 to 2 or worse, in either direction, happens about 11 times in 100. Stop there, and your data says the coin lands heads 80 percent of the time. Flip the same coin 10,000 times. The share of heads will land between 49 and 51 percent about 9,500 times in 10,000.

The shooting parallel. A rifle shoots one tiny group, with 2 shots outside it written off as "flyers." One group, and especially one group with the "flyers" removed, cannot separate a good rifle from good luck. Only more shots and honest shots can prove a rifle.

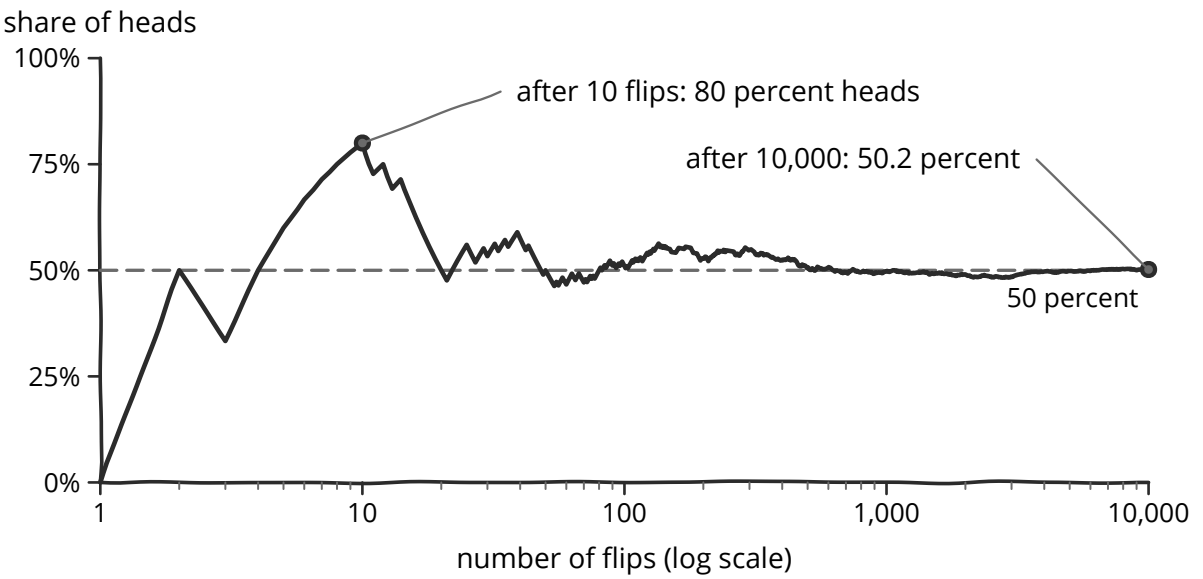

Simulated.

Figure 1-1. The share of heads in a long run of coin flips. It wanders early and settles near 50 percent.

The medical trial. A drug company gives a new heart medicine to five patients. Each patient gets a different dose. Patients 3 and 4 improve. Has the company found the perfect dose? No regulator would approve the drug on that evidence. Five patients cannot separate the drug's effect from chance. Regulators want large trials to wash out that noise. A late-stage trial typically enrolls 300 to 3,000 patients.[2]

The shooting parallel. A ladder test fires one shot at each charge. Two neighboring charges that land close together are patients 3 and 4 (see Chapter 29). Two bad results do not condemn a load, and two good results do not prove one.

The problem with small groups

Small groups mislead in three major ways.

1. **High volatility ("They swing widely").** Two small groups fired from the same rifle and ammunition often look completely different by chance alone. Fire two 5-shot groups from the same load, and one will be at least 1.5 times the size of the other about 30 times in 100. With 3-shot groups, that happens 46 times in 100.
2. **Selection bias ("The best of several is flattering").** Picking the best group and ignoring the rest gives a false picture of precision. Across seven 5-shot groups from the same load, the smallest group averages 0.66 times the load's true 5-shot average. The largest averages 1.38 times that average. The smallest group is usually just the luckiest of the seven.
3. **Statistical center bias ("They read small").** You measure a group from the center of the shots on the target, not the true center the load would show over many shots. Because that center is pulled toward the shots you just fired, the group reads smaller than the load's true spread. Mean radius (the average distance of shots from the center) reads low by:
   - about 18 percent for a 3-shot group
   - about 11 percent for a 5-shot group
   - about 5 percent for a 10-shot group

The fewer shots in the group, the more it understates your true spread (see *The Precision Rifle Handbook*).

All three sets of figures are calculations that assume normally distributed shots.

It is not just groups. A velocity standard deviation (SD) from a 5-shot string swings from one string to the next even more widely than a 5-shot group does (see *The Precision Rifle Handbook*).

A larger sample fixes all three problems. It also tells you when two loads really differ.

Small samples are not useless. A few shots can reject a gross fault, such as a loose scope (see Chapter 3). They cannot prove a small gain.

The price of certainty

The shots you need depend on the size of the difference you want to detect, not on whether you want to prove a load good or reject it as poor. A gross fault shows in a few shots. A small gain or loss takes dozens. The usual statistical standards allow a false alarm 1 time in 20 and ask for an 80 percent chance of catching a real difference. By those standards, you need about 35 shots per load (seven 5-shot groups) to tell apart two loads whose true group sizes differ by 1.5 to 1. A 1.25 to 1 difference takes about 110 shots per load (see *The Precision Rifle Handbook*).

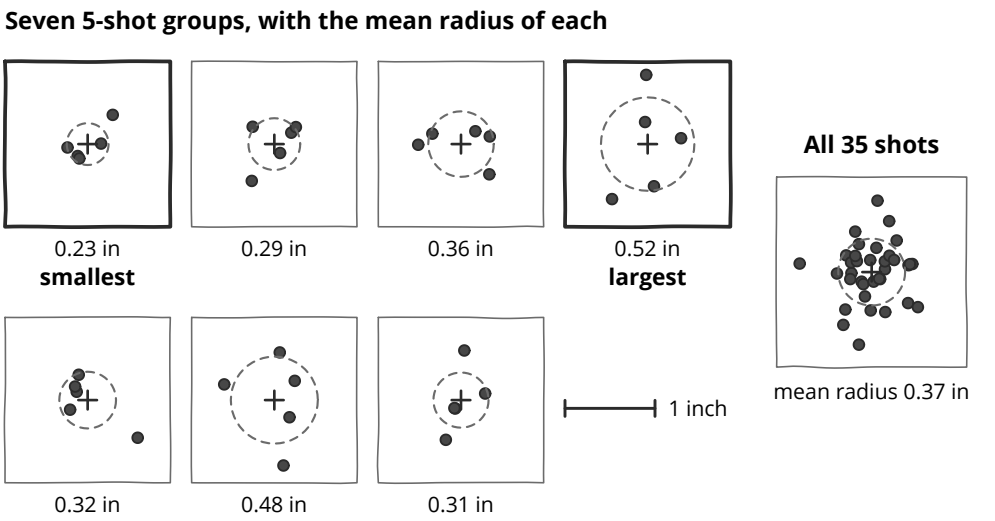

Figure 1-2. Seven 5-shot groups from one load, and the same 35 shots plotted about one center. The best and worst small groups differ by luck alone.

Uncertainty does not shrink in a straight line. It shrinks with the square root of the shot count. To cut your uncertainty in half, you must fire four times as many shots (for example, 40 shots instead of 10). Going from 3 shots to 30 cuts your uncertainty to less than a third. Going from 30 shots to 60 cuts it by only about 30 percent more, so the extra time and ammunition buy a much smaller gain.

The workflow on one page

The work follows a continuous path that loops from the rifle to the final application:

1. **Firearm.** Record the rifle specifications and lock its hardware.
2. **Equipment and components.** Learn what each tool and each component does and how to choose the right ones for your goals.
3. **Research.** Read published data, check bullet stability, and plan the load on paper.
4. **Assembly.** Assemble the rounds carefully according to your written recipe.
5. **Work-up.** Safely climb from the start load in small steps, chronographing every shot. Stop at the published maximum, at your velocity ceiling or at any pressure sign.
6. **Testing and records.** Keep meticulous records of every load and every shot (Chapter 27), confirm safe function and velocity, and run a proper statistical evaluation (*The Precision Rifle Handbook*).
7. **Adjustment.** Compare loads and diagnose any issues (Chapter 31). Adjust the recipe or try a new approach, and loop back through research, work-up and testing if necessary.
8. **Shoot for record.** Take your verified load to the field. Build its drop chart, find its hit probability and use it in a match or on a hunt (*The Precision Rifle Handbook*).

Steps 1 through 5, along with record keeping, safe work-ups, and workshop troubleshooting, take you from raw components to safe, functional ammunition that meets

your expectations. Extended statistical evaluation, external ballistics, drop charts, and hit probability are covered in *The Precision Rifle Handbook*.

Even a load that works comes back round. Barrels wear, seasons change and powder lots run out (see Chapter 30).

Chapter 2

Safety in the Workshop, at the Range and in Storage

Key points

- A loaded round is a small pressure vessel, and you are the person closest to it.
- The worst mistakes are often the simplest ones, and each rule prevents at least one of them.
- Safety comes from preventing errors. Pressure signs are poor warnings.
- Published data holds only for the exact components it was tested with.
- Storage and lead carry slower risks. Confined powder can burst its container, and lead enters the body by mouth and breath.

Why it matters

A rifle chamber holds tens of thousands of psi on every shot. The SAAMI limit for the .308 Winchester, for example, is 62,000 psi (see Chapter 4).[1]

The simple mistakes are the wrong powder, a double charge, an empty case, a bullet seated too deep or a charge pushed past the maximum. Every rule below prevents at least one of them. These rules stop mistakes at the workbench instead of trying to catch them after the shot.[2] Pressure signs are poor warnings (see Chapter 28).[3]

How it is done

Set up the workshop

Set up in a space that is free of distractions, well lit and dry. Keep carpet out of the loading area. It traps combustible dust and builds static charges that can fire a primer. Clear the workbench before you begin. Keep only one powder and one primer type on it, with the published data for your exact components. Keep open flame and tobacco away from the workbench, the powder and the primers. Wear safety glasses whenever you load. A primer can go off as you seat it, and your eyes are right above it.

Load only when you can give the job your full attention. Do not load when tired, ill, hurried or after drinking. Those are the times a step gets skipped or doubled. Develop a fixed routine and follow it every time. A consistent routine makes a skipped or doubled step immediately stand out.

Every loading session

1. Verify the scale with a check weight before the first charge (see Chapter 23). Record any anomalies.
2. Read the powder label and compare it with the recipe. Confirm the lot number.
3. Check that the measure is completely empty from the last session. Pour only the powder you need for the session.

4. Charge the cases in a logical order in a loading block, such as right to left and top to bottom. Weigh every charge for a work-up or a precision load. If you throw charges from a powder measure, check-weigh the throws often.
5. Look into every charged case under good light before you seat any bullet. The powder levels should match. Dump and recharge any case that looks higher or lower than its neighbors. Take extra care with reduced loads or any charge that fills less than half the case. Those cases can hold a double charge without overflowing. A load that fills 95 to 105 percent of the case cannot be double-charged without spilling (see Chapter 13).
6. Seat the bullets. Measure each round's CBTO and cartridge overall length against the recipe (see Chapter 24).
7. At the end of the session, pour unused powder back into its original container. Powder left out draws moisture from the air, which can change the pressure it produces. Unmarked powder can be mistaken for another.
8. Empty the hopper completely. Kernels left in the measure can drop into the first cases of your next session and hide under the new powder.
9. Put unused primers back in their original packaging.
10. Label the box with the load and the date (see Chapter 25).

Loads and component changes

Always begin at the published start load for your exact components, never at the maximum. The start load leaves room for the ways your rifle differs from the test barrel. If a source lists only a maximum, start at least 10 percent below it. Never load below a published start charge.[4] Too light a charge can ignite erratically or stick a bullet in the bore. Do not exceed a published maximum charge. The maximum was safe in the source's test barrel with the source's components. Your rifle may reach the same pressure with less powder (see Chapter 28).

Stop the work-up if you reach your velocity ceiling before the last step. Your velocity ceiling is the published velocity at the maximum charge. Lower it for a shorter barrel, and never raise it for a longer one, because the gain from extra barrel length is only an estimate (see Chapter 16). The ceiling is a pressure limit, not a goal (see Chapter 28).

Predicted data never replaces published data. Never change a model's powder settings to match your chronograph. That shifts its predicted pressure too.[5]

Work up again from the start load after any change of primer, case maker, bullet or powder. Do the same with a new barrel or a changed barrel length. A different component can change peak pressure substantially. A new lot of the same component usually shifts it only a little. Record the new lot number. Load 10 check rounds at your current charge, or one step lower if it sits at or near the published maximum. Compare their velocity with your records before you load in bulk. If the new lot runs faster by more than twice the noise (see Chapter 30), lower the charge and work up again from below. Do not substitute a powder because its name or its place on a burn chart looks similar. A burn chart is only a rough ranking, and two powders can swap places from one cartridge to another (see Chapter 13).

If you seat a bullet deeper than the published COAL, deeper than your tested recipe, or into the lands, work up again from the start load. Deeper seating shrinks the powder space and raises pressure (see Chapter 4). Seating into the lands raises it too (see Chapter 24). Never enlarge a flash hole past its specified diameter. A larger hole changes the primer flame and can spike pressure.

Cases and rounds

- Discard any case with an incipient head separation ring, a split or an enlarged, loose primer pocket (see Chapter 18). A case that fails on firing releases gas into the action, toward your face.
- Trim any case longer than the maximum case length before you load it. An overlong case can jam its mouth into the end of the chamber neck. The mouth then pinches the bullet and pressure rises (see Chapter 20).
- Anneal only empty cases. Heat can fire a live primer or light any powder left in the case. Keep water away from molten salt. Water that reaches the pot turns to steam at once and throws molten salt (see Chapter 21).
- Seat every primer fully, below flush. A high primer can make the action hard to close or misfire, and in a semi-automatic it can fire as the bolt closes (see Chapters 22 and 26).
- Do not force a primer. A primer that resists has encountered a crimp, a tilted start or carbon in the pocket (see Chapter 22). Crushing it can fire it.
- Do not force a live round into or out of the chamber. A round that resists does not fit, and forcing the bolt can leave a live round stuck with the bolt not locked. Reject the round instead (see Chapter 25).
- Monolithic copper bullets need their own published data and more jump than lead-core bullets. A monolithic bullet is longer than a lead-core bullet of the same weight. It sits deeper in the case and carries more bearing surface, and both raise pressure (see Chapters 14 and 24).
- In a semi-automatic, use gas-gun data where the maker publishes it. Gas-gun data stops at a lower pressure than bolt-action data for the same cartridge, and a bolt-action load can be unsafe in a gas gun (see Chapter 26).

To take a live round apart, pull the bullet and pour out the powder. Do not punch out a live primer. The decapping pin strikes it much as a firing pin does, and it can fire in the die. If the primer sits below flush, fire the empty primed case in the rifle at the range, then decap it. Do not chamber a case with a high or crooked primer. Closing the bolt can fire the primer before the bolt locks. Dispose of it as the primer maker directs (see Chapters 22 and 25).

At the range

Wear eye and ear protection at all times, and make sure everyone nearby does the same. Fire the steps of a work-up in order, lowest first, and chronograph every shot (see Chapter 28). Stop at once at any pressure sign. Signs include a stiff bolt lift, an ejector mark and a flattened, cratered or pierced primer. The absence of signs does not prove a load is safe. Stop as well when a shot reaches your velocity ceiling, or when a step gains far more velocity than the steps before it. After any stop, take the unfired rounds home and pull their bullets.

If a shot sounds or feels weak or abnormal, stop immediately. Unload the rifle and inspect the bore for a stuck bullet before you fire again. A squib is a shot too weak to push the bullet out of the barrel. The next shot behind that stuck bullet can cause a catastrophic failure. Take any suspect rounds home and pull them apart. Do not try to fire them.

If a round fails to fire, keep the muzzle pointed downrange for at least 30 seconds, because the round may be a hang-fire, one that fires after a delay.[6] Keep your face away from the action. Then open it, remove the round and look at the primer.[7] A dented primer means the round failed to fire. Take it home and pull the bullet (see Chapter 25). A primer with no dent means the firing pin did not strike it. Have the rifle checked before you fire it again. Check that the bore is clear before you load another round.[8]

Keep ammunition out of direct sunlight and hot vehicles. Never leave a round in a hot chamber between strings. Heat raises chamber pressure, and on a load near maximum that leaves no safety margin. At an indoor range, shoot only where the mechanical ventilation is adequate. Every shot puts lead from the primer into the air you breathe (see "Lead hygiene" below).

Lead hygiene

Lead builds up in the body over time and harms the nervous system. It can cause birth defects, reproductive harm and other serious injury.[9] It enters mainly through the mouth and the lungs. Primers and bullets contain lead. Spent primers and fired cases carry a residue of it.

Wash your hands and face thoroughly with soap and water after loading, shooting or cleaning a rifle. Wash them as well after you handle fired cases, spent primers or cleaning media. Do not eat, drink or smoke in the workshop or at the range until you have washed. Keep your hands away from your nose and mouth while you handle components. Keep children entirely away from the workshop and from fired brass. A growing child absorbs lead more readily than an adult, and no safe level of lead in children is known. Children also put their hands in their mouths.[10]

Wear a fitted respirator with N100 or P100 filters whenever you empty dry tumbling media.[11] The media traps and concentrates fine lead residue. Clean the workbench and floor with a damp cloth or mop, not a vacuum cleaner. A vacuum blows fine lead dust into the air and risks igniting spilled powder.

If you shoot or load frequently, consult a physician about whether periodic blood lead testing makes sense for your routine.

Storing powder

Store smokeless powder in its original container, which is built to split or vent at low pressure if the powder ignites. Never store powder in any other container.[12] Keep the containers in a cool, dry place. Choose one away from heat sources, furnaces, water heaters, direct sunlight and electrical equipment. Keep them well separated from solvents, flammable gases and other combustibles.

House powder in a storage cabinet built of insulating material with weak seams or vents that allow gas to escape freely. Never store powder in a sealed or strong container such as a gun safe. Confined gas can burst a rigid container with explosive force.

Keep only the quantities you need. Several small containers present less hazard than a single large one. Clean up any spilled powder promptly with a brush and dustpan. Many places limit how much powder and how many primers you may store, so find out what applies where you live.

Storing primers

Keep primers in their original factory packaging until you use them. Store them cool and dry so heat does not degrade them. Never store primers loose or in bulk containers. Massed primers can detonate together, producing a blast equal to a grenade in an enclosed space.[4] Handle primers only with clean, dry hands. Skin oils can degrade ignition sensitivity. Do not load a primer you cannot identify. Primers of different types look alike, and a change of primer can change peak pressure substantially (see Chapter 12). Dispose of old or unidentified primers as a primer maker's published guidance directs.[4]

Old powder and disposal

Check stored powder now and then. Open the lid and smell it. An acrid, acidic smell is a sign of breakdown (see Chapter 13). Dispose of such powder immediately. Deteriorating powder releases heat and acid, which speeds up the reaction and can cause spontaneous fire.

Dispose of old or suspect powder as its container directs. If the container gives no direction, burn it in an open, isolated clearing. Spread it in shallow trails no more than an inch deep, one pound at a time. Light it with a fuse or slow-burning train that gives you time to get well clear before the flame reaches the powder.[4] Empty each container completely before you dispose of it.

Do not load a powder you cannot identify. Powders that look alike can burn at very different rates, and an unknown powder has no data. Pass up inherited or second-hand containers of unknown history. Do not blend powders. A blend has no published data, and no one can say how it will burn.

You may reuse the powder from a round you pull at the workbench in the same session, such as one with a badly seated bullet. You still know what that powder is. Once a round has left the workbench, dispose of its powder when you pull it. After a night in a range bag you can no longer prove what is in it. The same goes for powder from discarded cartridges. Only this session's powder goes back into its container: powder from the measure, the scale pan, a case you charged and dumped, or a round you pulled before it left the workbench.

Why each rule exists

Each number is a rule in Before You Begin and on the Appendix B card:

Rule	What it prevents
1. Full attention	A skipped or doubled step
2. Safety glasses whenever you load	An eye injury from a primer that goes off as you load
3. One powder and one primer type on the workbench	The wrong powder or primer in a case
4. Exact published data, and only known powder	A substitute or unknown powder that burns far too fast
5. Start at the start load, in small steps, never past the maximum	Pressure you cannot see in your rifle, and case or action failure
6. Work up again after a component or barrel change, and check a new lot	A pressure jump from a new primer, case, bullet, powder or barrel
7. Discard damaged cases, and trim overlong ones	A case that fails and releases gas, or a pinched bullet
8. Verify the scale every session	Charges heavier or lighter than you think
9. Look into every charged case	A double charge, or an empty case that lodges a bullet in the bore
10. Treat seating deeper or into the lands as a new load and work up again	Pressure from less powder space or a jammed bullet
11. Empty the measure at the end of a session	A hidden layer of the wrong powder
12. Eye and ear protection	Injury from a case failure, or from noise
13. Steps fired in order, a chronograph and two limits	Passing the published maximum pressure with no sign
14. Stop at any pressure sign	More shots at a pressure already too high
15. Keep rounds cool	Heat pushing a near-maximum load over pressure
16. Stop after a shot that sounds or feels wrong, and wait out a misfire	A second shot behind a bullet stuck in the bore, or a hang-fire that fires as the action opens
17. Original containers, cool storage and lead hygiene	A fire that turns into an explosion, and lead taken in by mouth or breath
18. Predictions are for learning	A load set from a model instead of published data

Chapter 3

The Rifle as a System

Key points

- A handload is specific to one rifle, and your baseline data only applies to the exact setup it was tested in.
- Cut, button and hammer-forged barrels can all shoot well. A heavier contour warms less, and heat moves the point of impact.
- A damaged crown or a new muzzle device moves the point of impact.
- Barrel length moves velocity. It barely moves peak pressure.
- Record twist, sight height, magazine length and the lands. The lands move forward as the throat wears.

Why it matters

Every result you measure comes from the rifle and the load together. Two rifles in the same chambering can fire the same load at different velocities because their bores, throats and finishes differ.[1] A shifting scope, a loose action screw or a new trigger changes your groups as surely as a new powder does. Until the rifle stays the same from one test to the next, you cannot tell what the load is doing.

How it is done

Learn the barrel first. Then measure the rifle, lock its hardware and record it.

The barrel

A rifle barrel is a precisely made steel tube. The chamber is cut into the breech end, and the crown is cut at the muzzle. The bore joins the two. Spiral ridges called rifling line the bore. They grip the bullet and spin it so it stays stable in flight (Figure 3-1).

- **Lands** are the raised spiral ridges inside the bore. **Grooves** are the recessed channels cut between them.
- **Bore diameter** is measured across the tops of the opposing lands. **Groove diameter** is measured across the bottoms of the grooves. Bullets are made to the larger groove diameter, so the raised lands engrave the bullet as it enters the rifling. The engraved bullet seals the propellant gases behind it and takes up the spin.
- **The crown** is the machined exit of the bore at the muzzle. It is the last point the bullet touches before free flight. A burr or an uneven edge there deflects the escaping gas and moves the point of impact (see “The muzzle” below). Protect the crown from knocks, and keep a cleaning rod from wearing it.

Most modern rifle barrels are made from chrome-moly steel (such as 4140) or martensitic stainless steel (such as type 416).[2] The two differ in how well they resist rust and how easily they machine. Neither is more accurate than the other.[3] Whether stainless keeps its accuracy longer is not settled.[3]

At the breech end, the chamber supports the cartridge case. The rifling begins just ahead of the case mouth. The transition between them is the throat, where the loaded round meets the barrel (see Chapter 4).

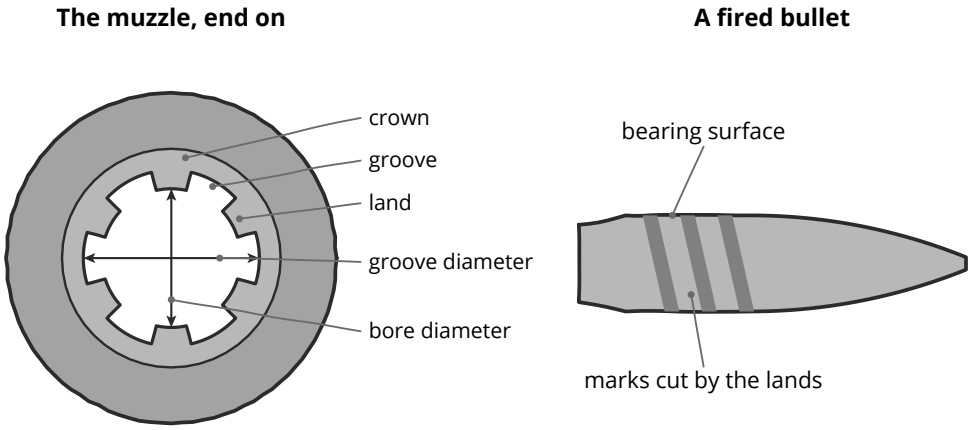

Rifling and engraving depth exaggerated.

Figure 3-1. The bore seen from the muzzle, with the lands, the grooves, the bore diameter and the groove diameter. Beside it, a fired bullet engraved by the rifling.

Contour and fluting

The contour, or profile, is the outside shape of the barrel along its length. The barrel blank is turned on a lathe centered on the bore. That keeps the outside of the barrel concentric with the bore.[2] Most contours have a straight shank just ahead of the action and then taper toward the muzzle. Makers give their profiles names such as sporter, varmint or heavy. They also publish drawings that give the diameters along the barrel. The names are not standard, so one maker's varmint contour differs from another's. Compare the drawings, not the names.

A heavier contour has more steel. That makes it stiffer. The extra steel also soaks up more heat, so each shot raises the barrel temperature less. In controlled tests over long firing strings, the point of impact shifted by more than 1 MOA as barrels heated. Heavier contours generally moved less.[4] One MOA (minute of angle) is about 1.047 inches at 100 yards. The price of a stiffer barrel that holds steadier under heat is more weight to carry and support.

Fluting cuts lengthwise grooves into the outside of the barrel. It saves weight and adds surface area, which aids cooling. A fluted barrel is stiffer than an unfluted barrel of equal weight, because the unfluted barrel needs a slimmer contour to weigh the same.[5] But a fluted barrel is always less stiff than an unfluted barrel of the same starting contour. Removing steel reduces stiffness.

A carbon-fiber barrel wraps a thin steel liner in structural carbon fiber. It is very stiff for its weight. In the same heat tests, a carbon-fiber barrel ranked among the most stable. Its point of impact shifted little as it heated.[6]

Heat in the barrel

Every shot puts heat into the barrel. The hot powder gas heats the bore hardest at the throat, where temperature and pressure peak. That heat moves outward through the steel to the outside of the barrel. The surface then sheds heat to the air by radiation and by convection, where moving air carries it away. A barrel takes in heat in seconds but needs many minutes to cool.

How fast a barrel warms depends on the powder charge compared with the weight of the barrel steel. A large case behind a small bore in a slim barrel heats the fastest. A small case in a heavy barrel heats the slowest.

Heat that builds up changes how the rifle and the load shoot.

- **Point of impact moves.** As a barrel heats, its shots can walk and its groups can open (see "Contour and fluting" above).
- **Velocity climbs.** Velocity can rise through a string as the chamber heats. A round left in a hot chamber warms, and its pressure rises. Never leave one there (see Chapters 2 and 30).
- **The throat wears faster.** Heat speeds the erosion that moves the lands forward (see "Throat erosion" below).

Pace your shots to keep heat from skewing a test. Start each test with a cool barrel and fire at a steady pace, so every load is shot at the same barrel heat (see *The Precision Rifle Handbook*). Open the action between strings so air can move through the bore. Keep the rifle in the shade.

Contested: a black barrel cools faster than a bright one

The claim. A black barrel sheds heat faster than a bright stainless one.

The physics. The finish does not change how much heat a shot puts in. It changes how well the surface radiates. A flat black finish radiates over 90 percent of the most any surface can. Cleaned stainless steel radiates about 30 percent, and polished stainless even less.[7] With the barrel at about 140 °F in 70 °F still air, radiation carries about as much heat as the air does. A black barrel can then shed roughly half again as much heat as a bright one. In a 10 mph breeze, the moving air carries most of the heat. A black barrel then sheds only about a tenth more heat than a bright one.[8] A coating is too thin to hold heat in. Sunlight works the other way. A black finish takes in more of the sun's heat, so in full sun a black barrel sits warmer between strings.

The test. Heat two barrels of one contour, one black and one bright, to the same temperature. Log their cooling with thermocouples. Do it in still air and in wind, and in shade and in sun. An infrared thermometer misleads here. It reads bright steel far cooler than it is, because bright steel radiates less.

The data. No controlled cooling test of black and bright rifle barrels has been published. The physics rests on measured surface values and standard heat-transfer methods.

The verdict. Plausible but unproven. Expect a real gain in still air and shade, little in wind and a loss in full sun. Time between strings cools a barrel more than any finish.

Throat erosion

Hot gas at high pressure wears the throat on every shot. The wear eats away the start of the rifling and moves the lands forward. In 6 mm and 6.5 mm barrels the lands move a few thousandths of an inch per 100 rounds. At a fixed seating length, the bullet's jump grows over time. Measure the distance to the lands from time to time (see Chapter 24). Manage throat wear and velocity drift over the life of the barrel (see Chapter 30).

The muzzle

When the bullet leaves the muzzle, the gas behind it is still under high pressure. As the bullet clears the crown, that gas expands around its base and overtakes it. Even expansion pushes the bullet straight ahead. If gas escapes early on one side, it pushes unevenly on the bullet's base and tips the bullet slightly off line. That tilt is called yaw. In tests of large-caliber barrels, uneven pressure at the muzzle tracked the bullet's first yaw closely.[9]

Muzzle pressure is the gas pressure still behind the bullet as it leaves. It is far lower than the peak pressure reached early in the shot (see Chapter 4). In a test of a 5.56x45mm NATO rifle, peak pressure near the chamber was about 55,700 psi. Muzzle pressure was about 4,800 psi from a 24-inch barrel, 8,150 psi at 14.5 inches and over 25,000 psi at 5 inches. It rose faster and faster as the barrel got shorter.[10] Slower powders and heavier charges also leave more pressure at the muzzle, with more blast and noise.[11]

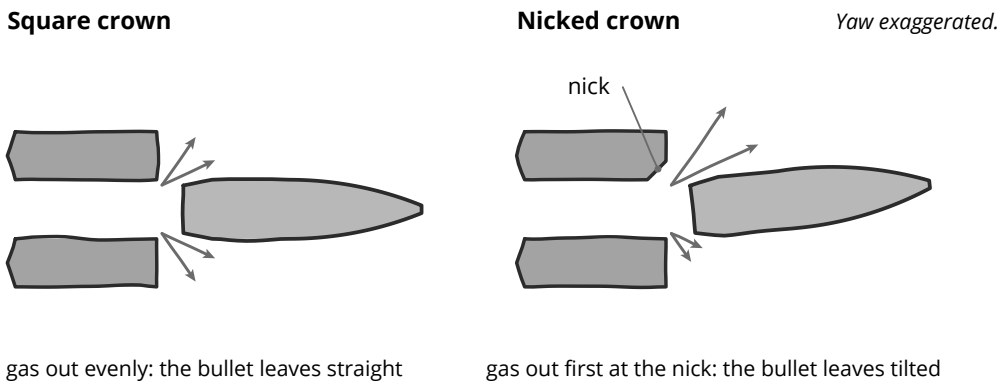

Figure 3-2. Gas leaving the muzzle behind the bullet. A square crown lets it out evenly all round. A nicked crown lets it out first on one side, and the bullet leaves tilted.

The crown. A crown cut square to the bore with a sharp, even edge lets gas escape evenly around the bullet base. A nick, a burr or wear from a cleaning rod lets gas out early on one side. Look over the crown from time to time under bright light and a magnifier. A gunsmith can recut a damaged crown square to the bore. Re-zero the rifle after any crown work.

Contested: a damaged crown ruins a rifle's precision

The claim. A nick in the crown permanently opens a rifle's groups.

The physics. A flaw in the crown lets gas out early on one side and tilts the bullet. A tilt that is the same on every shot moves the point of impact. A tilt that changes from shot to shot opens the group.

The test. Fire enough groups to find a reliable mean radius for the rifle. Damage the crown on purpose and fire the same number of shots. Then recut the crown square to the bore, fire a third set, and compare the three (see *The Precision Rifle Handbook*).

The data. Three published tests damaged rifle crowns on purpose to measure the effect. All three saw a clear shift in the point of impact. A crown cut with a grinder moved the point of impact about 16 MOA.[12] A crown struck with a hammer moved it well over a foot. Recutting the crown brought it back.[13] The effect on group size is less clear. The ground crown still shot six 5-shot groups that averaged about 1 MOA, against a single 0.55 MOA group before the damage.[12] The hammered crown averaged 2.26 inches over five 5-shot groups, against 1.55 inches before. Yet the same rifle averaged 1.40 inches after its muzzle was sawn off and deburred with a knife.[13] A third test damaged the crowns of four barrels, from mildly to severely. Every damaged barrel shot less accurately than before, and the first shots strayed the most. The report gave no group sizes.[14] None of these tests fired enough shots to tell a small change in group size from chance (see Chapter 1).

The verdict. Plausible but unproven. Every test shows that a damaged crown moves the point of impact. Whether crown damage reliably opens groups is not settled. Treat a damaged crown as a hardware change: recut it, re-zero the rifle and shoot a new baseline.

Muzzle devices

A muzzle brake vents gas to the sides to cut recoil. A suppressor traps the gas and lets it out slowly. Either one changes the blast the bullet flies through. Either one also adds weight at the muzzle, and that changes how the barrel vibrates (see Chapter 29). In one test, muzzle devices were threaded to run true to the bore within .002 inch.[9] A device that runs off the bore line lets the gas out unevenly.

- **Point of impact moves.** Expect the zero to move when you fit or remove a device. Zero with the device you will shoot with.
- **Velocity can change.** In one test, a suppressor lowered one load's velocity by about 30 fps (about 1 percent). It raised two others a little. Measure velocity with the device you will shoot with.[9]
- **Yaw can change.** In the same test, a .300 Winchester Magnum rifle fired four bullets with no device and with three suppressors. It fired 5 to 10 shots of each bullet in each setup. For three bullets, the drag changed by 4 percent or less. One bullet was prone to yaw. Its drag was highest with no device and fell with each suppressor, most with a two-stage design.[15]

Evidence · Plausible but unproven
Brakes and suppressors are said both to open groups and to tighten them. In one published test, a rifle fired one 5-shot group with each of five brakes and one with none, too few to tell a real change from luck (see Chapter 1).[16] A device is part of the rifle's hardware. Fitting, removing or changing one voids the baseline (see "The hardware baseline" below).

How rifling is made

Every barrel begins as a solid round bar. A deep-hole drill bores a hole slightly under the final bore diameter. A reamer then brings the hole to size and smooths its surface.[2] The rifling is then formed by one of three main methods (Figure 3-3).

- **Cut rifling.** A hook-shaped cutter with a single point is drawn through the bore again and again. It turns as it travels, so the groove follows the twist rate. Each pass shaves a very thin layer of steel from one groove. The cutter removes steel without cold-working it, so it leaves very little stress in the barrel.[2] Cut rifling is the oldest method and the slowest.[17]
- **Button rifling.** A button is a hard carbide die ground with the reverse of the rifling. It is pulled or pushed through the reamed bore in one pass. The button does not cut metal. It presses the grooves in by pushing the steel aside. That cold-forming leaves a lot of stress in the steel, so the barrel must be heat-treated after rifling to relieve it. Without stress relief, the bore can open up or the barrel can warp when its outside is turned to contour.[2]
- **Hammer forging.** A short, thick-walled barrel blank is fitted over a hard mandrel that carries the reverse of the rifling. Opposing power hammers beat the outside of the blank down onto the mandrel. The steel stretches longer and thinner as the rifling forms inside the bore.[17] Done at room temperature, the process is called cold hammer forging. The machinery costs a great deal, but the cost per barrel is low. Many modern factory rifles use hammer-forged barrels.[17]

The method a maker uses tends to follow its size. The largest makers mostly hammer forge, mid-sized makers button rifle and small shops cut.[18]

Whatever the method, a match bore needs the same bore and groove diameters along its full length. Its twist must also follow its design from breech to muzzle. Most barrels have a constant twist. Some match barrels use a gain, or progressive, twist that quickens toward the muzzle. A flaw in the bore can be pressed into each bullet that passes through it. A bullet marked that way can be less stable in flight.

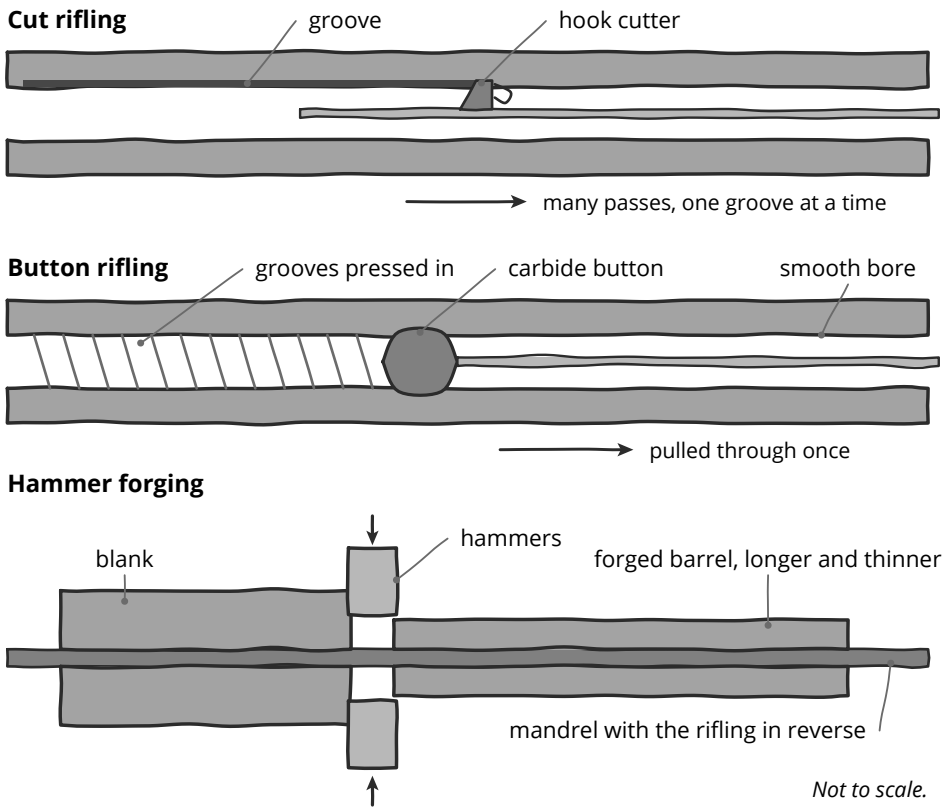

Figure 3-3. The three main rifling methods. Cut rifling cuts one groove at a time. Button rifling presses in all the grooves in one pass. Hammer forging beats the blank down onto a mandrel.

Evidence · Plausible but unproven

Cut rifling is widely held to be the most accurate method. No controlled test of well-made barrels from each process has been published. All three methods can make an equally accurate barrel.[18] What counts is the finished bore, not the process that made it. Cut rifling is slow, and small shops favor it. A small shop can inspect each barrel closely. Button rifling and hammer forging are faster and suit mass production. Judge a barrel by its maker's quality control and the groups it shoots.

Barrel length and velocity

Unload the rifle and check that the chamber is empty before you take any measurement.

To measure barrel length, take off any muzzle brake, suppressor or thread protector so the crown is bare. Close the bolt on the empty chamber. Slide a cleaning rod in from the muzzle until it stops against the bolt face. Mark the rod flush with the crown. Pull the rod out and measure from its tip to the mark (see Figure 3-4).

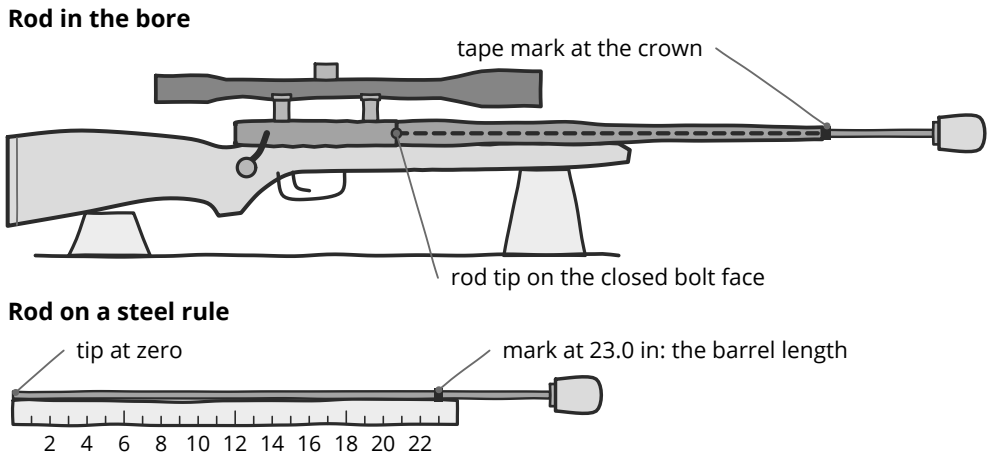

Figure 3-4. Measuring barrel length with a cleaning rod against the closed bolt face.

Published load data comes from test barrels that your rifle will rarely match. A shorter barrel gives less muzzle velocity. A longer barrel gives more, but each added inch gains less. Published barrel tests show a change of about 17 to 43 fps per inch, depending on the cartridge.[19] Test barrels also often give higher velocities than sporting rifles.[20] Treat a published velocity as a reference, not a promise.

Barrel length has almost no effect on peak pressure. Pressure peaks in the first few inches of bullet travel, long before the bullet reaches the muzzle (see Chapter 4).[21]

To estimate how barrel length changes velocity, multiply the difference in length by the change per inch. For a shorter barrel, lower your velocity ceiling by 43 fps per inch unless you have a published test for your cartridge. The 43 fps figure gives the lower, safer ceiling. Do not raise the velocity ceiling for a longer barrel, because the gain from extra length is only an estimate (see Chapter 16).

EASIER ON EP · IGNITION · INTERNAL BALLISTICS

Ignition shows how predicted velocity changes with barrel length. Like every prediction, it is for learning.

empiricalprecision.com/heurisko?tab=ignition

Twist and stability

A rifled barrel spins the bullet so it stays stable and flies point first. Twist rate is the length of bore in which the rifling makes one full turn. One turn in 8 inches is written as 1:8. A shorter length is a faster twist, and it gives the bullet more spin.

Longer bullets need a faster twist. Check that your barrel's twist will stabilize a bullet before you buy it (see *The Precision Rifle Handbook*).

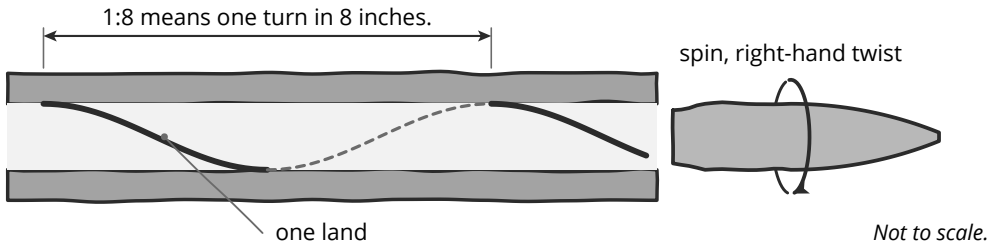

Figure 3-5. Twist rate. The rifling makes one full turn over the twist length, and the bullet leaves the muzzle spinning.

Use the maker's figure for the twist or measure it yourself. Push a tight patch on a free-spinning cleaning rod a short way into the bore, so the patch grips the rifling. Mark the rod at the muzzle and stick a tape flag on it near the handle. Push the rod in until the flag has made one full turn, then mark the rod at the muzzle again (see Figure 3-6). The distance between the two marks is the twist rate. Watch which way the rod turns from the handle end as you push it forward. Clockwise is a right-hand twist, and counterclockwise is a left-hand twist. Record both the rate and the direction (such as 1:8 right-hand), because spin drift depends on both (see *The Precision Rifle Handbook*).

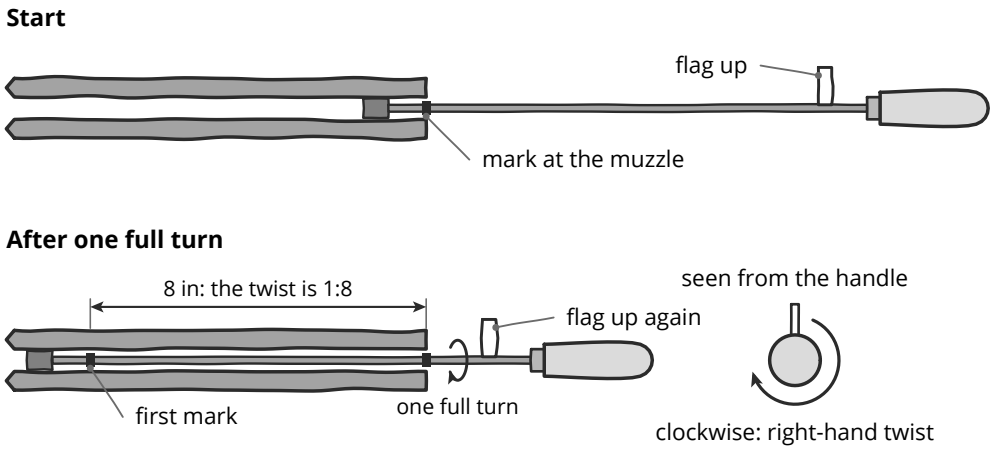

Figure 3-6. Measuring twist rate and direction with a patched rod and a flag on the rod. Seen from the handle, the rod turns clockwise in a right-hand twist.

Sight height and trajectory

The scope sits above the bore, so the line of sight and the bullet's path start apart. The bullet leaves the muzzle below the line of sight. It rises through the line of sight to its highest point and drops back through it at the zero distance. Sight height is the distance from the center of the bore to the center of the scope. It sets where the two lines cross, and every drop chart needs it. Inside the zero distance, an error in sight height can move the predicted point of impact by more than an inch.[22] Beyond the zero distance, the error grows with distance. With a 100-yard zero, it reaches about 0.9 MOA per inch of error at 1,000 yards. A drop chart trued at long range absorbs that far error. A wrong sight height then shows up at close range (see *The Precision Rifle Handbook*).

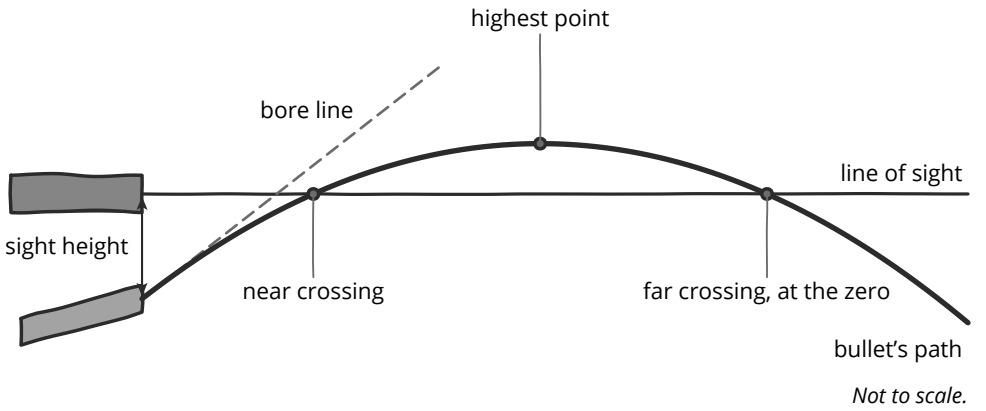

Figure 3-7. Sight height, and the line of sight crossing the bullet's path near the muzzle and again at the zero distance.

Worked example. Example numbers. Not load data.

To find sight height, use calipers that read to .001 inch. Measure the gap between the bottom of the scope's main tube and the round receiver or barrel below it. Measure that part's diameter at the same spot. Then add half of each diameter to the gap. This assumes the receiver or barrel is round and centered on the bore.

```
sight height = gap + (tube diameter ÷ 2)
                   + (receiver or barrel diameter ÷ 2)

gap                                    = .290 inch
30 mm tube = 1.181 inch, so half       = .591 inch
receiver   = 1.350 inch, so half       = .675 inch

sight height = .290 + .591 + .675      = 1.556 inch, about 1.56 inch
```

Magazine length and seating

A round that feeds from a repeating rifle's magazine must fit inside it. The longest round that feeds reliably is the rifle's magazine length. It can be shorter than the cartridge's maximum COAL (cartridge overall length, measured from the case head to the bullet tip). For rounds that must feed from the magazine, magazine length caps how far out you can seat a bullet. If the lands sit beyond that limit, those bullets must jump to reach the rifling.

A repeater can also be single-fed. A round too long for the magazine can be loaded by hand, one round at a time. Some Highpower service rifle shooters do this with

semi-automatic rifles (see Chapter 26). In the slow-fire stages they load each round by hand, so they seat their bullets long, past magazine length. They keep magazine-length rounds for the rapid-fire stages.

Measure magazine length with dummy rounds once you have a seating die, sized cases and bullets (see Chapters 19 and 24). Until then, a factory round that feeds and chambers reliably gives you a length known to fit.

1. Make dummy rounds with no primer and no powder. Mark them for good so they can never mix with live ammunition. Coloring the case or drilling a hole through the case wall works well (see Figure 3-8).
2. Seat a bullet long on purpose and try the round in the magazine. Seat the bullet deeper in small steps until the round fits inside the magazine.
3. Cycle the dummy round from the magazine through the action several times. Check that the bullet tip clears the front of the magazine without binding and that the round chambers smoothly.
4. Record the longest overall length that feeds reliably every time. That length is your magazine length.

Three limits cap how long you can load a round: magazine length (for magazine-fed rounds), distance to the lands, and neck grip. Seat the bullet at least one caliber deep in the neck so the case holds it securely. The published COAL is the lower limit. If you seat a bullet deeper than the published COAL or deeper than your tested recipe, work up the load again from the start load (see Chapter 28). Choose an overall length between these upper and lower limits (see Chapter 24).

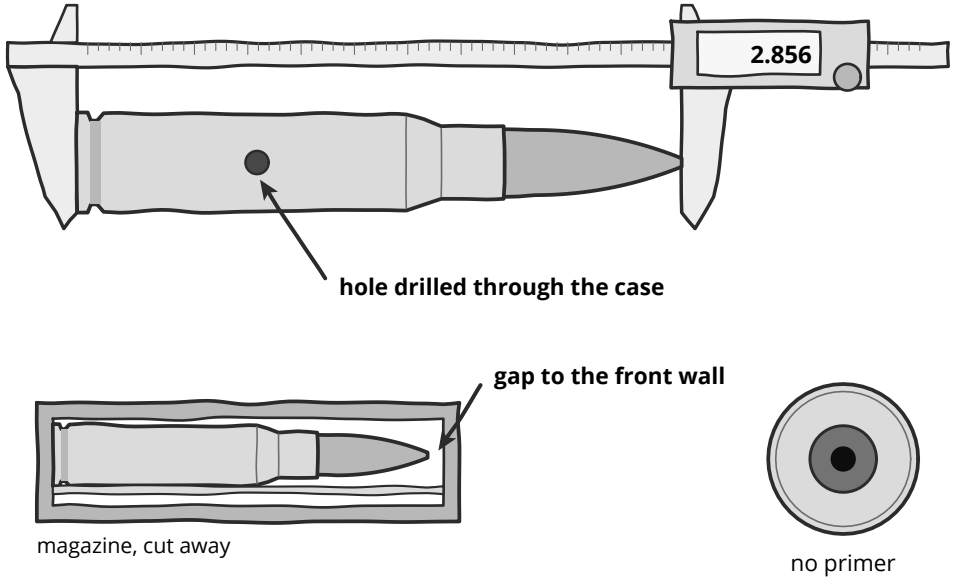

Figure 3-8. A clearly marked dummy round beside the magazine, with its length measured.

Bedding, rings and trigger

The action, stock, scope and trigger work as one system. Every joint between them is a place where something can move.

A thin witness line of paint across each screw head and onto its seat shows movement at a glance. A broken line means the screw has backed out or loosened under recoil.

Look over the action bedding and the barrel channel. Check that a free-floating barrel clears the stock along its full length and that nothing shifts under load. Measure and record the trigger pull weight if you have a gauge.

A loose scope shows up quickly on target. Suppose a rifle that should group well prints a 6-inch group at 100 yards with 3 shots. Something is wrong, such as loose mounting hardware or faulty ammunition. Fix the fault before you test any load. Three shots are enough to show a fault that large. Now suppose you replace the rings and the next 3 shots still spread across 5 inches. The rings were not the cause, and more shots will not change that. Example numbers. Not load data.

The hardware baseline

A baseline records how the rifle shoots in one fixed setup. You compare every later load against it. That baseline holds only while the hardware stays the same. Changing the scope, rings, stock, trigger or muzzle device changes the system and voids the baseline.

Never change hardware in the middle of a test. Suppose you fit a lighter trigger halfway through testing a batch of loads and your groups shrink. The later loads look better than the earlier ones, even though the trigger made the difference, not the ammunition. When you change two things at once, you cannot tell which one caused the result. The test is ruined, and you must start over.

1. Finish all hardware work before you start load development. This includes the scope, rings, mounting base, stock, bedding, trigger and any muzzle device.
2. Torque every fastener to the maker's specification with a torque driver (see Chapter 10) and mark each screw head with a paint witness line. Record the torque values.
3. Write the full hardware setup and the date in the rifle record.
4. Shoot a baseline with this setup before you test any load (see *The Precision Rifle Handbook*).
5. Leave the hardware untouched until the test is complete.
6. If any part changes or shifts, close the old entry in the rifle's baseline log and shoot a new baseline (see Chapter 27).

Record the rifle

Write every measurement in the rifle record (see Chapter 27).

- **Cartridge.** Read the chambering stamped on the barrel, and use load data for exactly that cartridge.
- **Measurements.** Barrel length, twist rate and direction (such as 1:8 right-hand), sight height and magazine length, as measured above.
- **Distance to the lands.** Measure it for each bullet you load, by one method every time (see Chapter 24). Record each sitting in the rifle's lands log (see Chapter 27).
- **Barrel.** The maker, rifling method, contour, finish and round count.
- **Hardware.** The scope, rings, mounting base, stock and bedding, trigger and any muzzle device, with the torque values.

Chapter 4

How a Cartridge Works

Key points

- A cartridge has four parts: the case, the primer, the powder and the bullet.
- Firing is a pressure event. Pressure peaks in the first few inches of bullet travel, then falls.
- Peak pressure is what the case and the action must hold, so it is what the standards limit.
- Most bottleneck cases headspace on the shoulder.
- SAAMI and C.I.P. are two standards with different limits. Pressures in psi and in CUP cannot be converted.

Why it matters

Every pressure decision you make rests on how a cartridge works. Case capacity, seating depth, bullet weight, powder and primer each change the pressure curve. Once you know how a round fires, you can see why a small change in the workshop matters. You also see a published maximum for what it is: a number measured one way, under one standard, in one test barrel.

How it is done

Inside the barrel and after it

Internal ballistics runs from the firing pin's strike until the bullet leaves the muzzle. It covers ignition, pressure and velocity. Every choice you make in the workshop acts there first: case capacity, charge, powder, primer, seating depth and bullet. External ballistics covers the bullet's flight from the muzzle to the target: stability, drop and drift. The bullet you choose and the velocity you give it decide whether it flies point first and how much it drops and drifts (see *The Precision Rifle Handbook*).

The four components

- **The case.** A brass container that holds the other three parts. Its head carries the extractor groove, the primer pocket and the flash hole. The body, shoulder and neck form the bottleneck, and the neck grips the bullet. When the round fires, the case walls swell against the chamber and seal the gas in. The space inside the case, its capacity, is one of the strongest levers on pressure (see Chapter 11).
- **The primer.** A small metal cup that holds a shock-sensitive compound and a tiny anvil. A blow from the firing pin crushes the compound against the anvil and lights it. Primers differ in size and in output (see Chapter 12).
- **The powder.** Smokeless powder is a propellant, not a high explosive. It burns at a controlled rate. It carries its own oxygen, so it burns without air, even sealed inside a case. It also burns faster as pressure rises (see Chapter 13).
- **The bullet.** The projectile. Its bearing surface is the full-diameter part that grips the rifling. Its weight, length and shape matter inside the barrel as well as in the air (see Chapter 14).

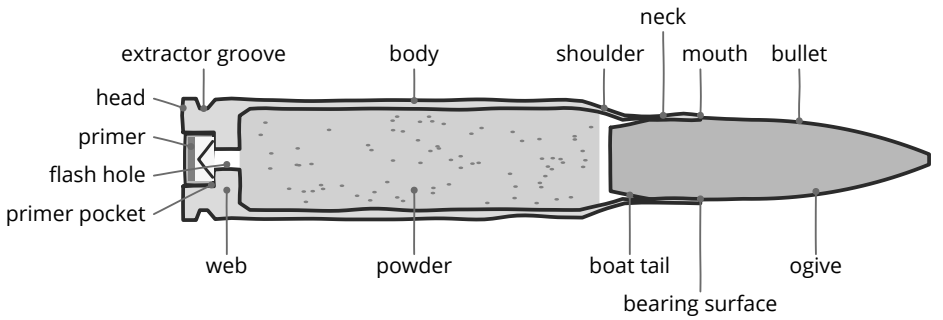

Figure 4-1. Cutaway of a loaded bottleneck rifle cartridge with its parts labeled.

Chamber, throat, freebore and lands

The chamber is the cavity at the rear of the barrel that holds the cartridge. It is cut to the shape of the case, with a little clearance at the body, the shoulder and the neck. Ahead of the neck, the bore begins.

- **Freebore** is a smooth, unrifled section just ahead of the case neck. A bullet can travel through it before it touches the rifling. Some chambers have very little. Others have a lot.
- **The throat**, or leade, is the tapered start of the rifling. Here the lands rise to full height.
- **The lands**, the raised ridges of the rifling, start at the throat. The bullet must be forced into them (see Chapter 3).

Jump is how far the bullet travels before it meets the lands. **Jam** means the bullet is seated into them. For seating, the length that matters is the cartridge base to ogive (CBTO). It runs from the case head to a point on the bullet's curved nose, near where the nose meets the lands. You measure where the lands sit in your own rifle (see Chapter 24).

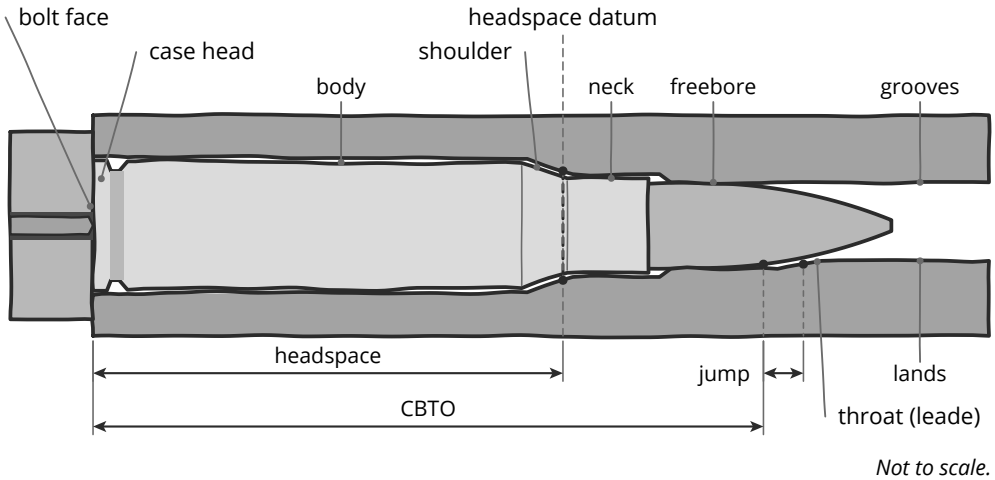

Figure 4-2. The chamber and throat of a bottleneck rifle, with the headspace datum marked. The clearances are drawn larger than life so they show.

Headspace on the shoulder

Headspace is the distance from the bolt face to the feature in the chamber that stops the cartridge from moving forward. On most bottleneck cases, that feature is the shoulder. The

measurement runs from the bolt face to a datum line. The datum is the point on the shoulder where it reaches a set diameter. Rimmed cartridges, such as the .30-30 Winchester, headspace on the rim.[1] By standard, a new belted magnum case headspaces on the front of the belt.[2] Once fired, size it by the shoulder like any other bottleneck case (see Chapter 19).

Two lengths meet at that datum.

- **The chamber's headspace** is set when the barrel is fitted. It is checked with GO and NO-GO gauges.
- **The case's base-to-shoulder length** is set by your sizing die. You measure it with a comparator on calipers (see Chapter 9).

The case must be a little shorter than the chamber so the bolt closes freely. A case that is too long makes the bolt hard to close. Never force a round into the chamber. A case whose shoulder is pushed back much too far stretches near the head each time it is fired. Repeated stretching ends in a head separation, where the case breaks in two. Too much clearance can also flatten primers at low pressure. That is one reason primer reading is unreliable (see Chapter 28).

The ignition sequence

1. The firing pin strikes the primer. The compound is crushed against the anvil and ignites.
2. Flame and hot particles pass through the flash hole into the powder.
3. The powder grains ignite at their surfaces and begin to make gas. Pressure rises inside the sealed case.
4. The case walls swell against the chamber and seal it.
5. The bullet starts to move once the pressure behind it overcomes the neck's grip. This moment is called shot start.
6. The bullet crosses any freebore and meets the rifling. It must be forced into the lands, which takes extra pressure. After that, friction in the bore holds it back.
7. The powder burns faster as pressure climbs. At the same time, the space behind the moving bullet grows. Pressure peaks when that growing space begins to outrun the gas.
8. After the peak, pressure falls. The space behind the bullet now grows faster than the powder can fill it with gas, even if some powder is still burning. The barrel walls also draw heat from the gas.
9. The bullet leaves the muzzle and the pressure drops. The case springs back slightly from the chamber wall, so it can be extracted.

The pressure curve

Plot pressure against time and you get the same basic shape for every rifle load (Figure 4-4). Pressure climbs steeply from shot start. It peaks early, while the bullet has moved only a few inches.[3] Then it falls along a long tail until the bullet leaves the muzzle.

Peak pressure matters because it is the load that the case, the chamber and the action must hold. Too much of it can let gas escape around the primer or through a failed case. A

large overload can wreck the rifle and injure the shooter. That is why SAAMI and C.I.P. set limits on peak pressure. It is also why published maximum loads stay at or below those limits.

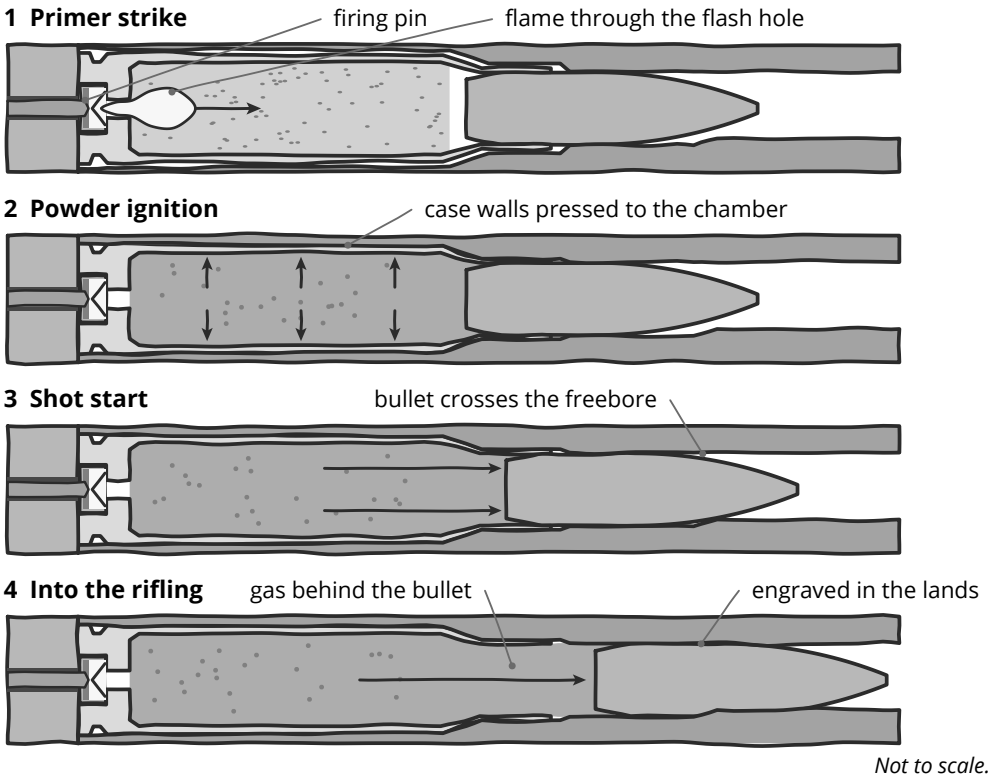

Figure 4-3. The ignition sequence in four panels: primer strike, powder ignition, shot start and the bullet entering the rifling.

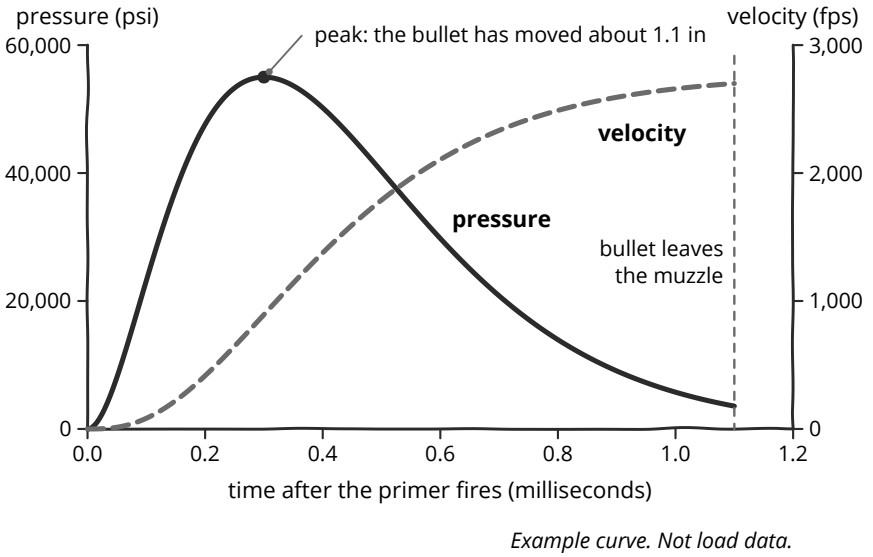

Figure 4-4. Pressure and velocity against time for one rifle load. Pressure peaks early. Velocity keeps rising until the muzzle.

Velocity is a different matter. It comes from the area under the pressure curve in Figure 4-4, not from the peak alone. That area is the push summed over the whole time the bullet is in the barrel. So a lower peak pressure is no guarantee of a lower velocity.

For one powder and one bullet, more powder raises the peak pressure and the velocity together. That is why velocity serves as your pressure gauge in a work-up (see Chapter 28). Different powders produce different curve shapes. A slower powder can peak lower than a faster one yet hold pressure longer down the barrel. Because that wider curve covers as much area or more, it can match or beat the velocity of the higher-peaking load.

Each row below changes one variable in the workshop and holds the rest of the load constant:

Change in the workshop	Peak pressure	Velocity
More powder	Up	Up
A faster powder at the same charge	Up, and earlier	Varies
A heavier bullet	Up	Down
Less case capacity, as with thicker brass	Up	Up
Bullet seated deeper	Up	Up
Bullet seated into the lands	Up	Hard to predict
Warmer powder	Up	Up
A different primer	Can move a lot	Can move a little
A longer barrel	Little change	Up

Safety · See Chapter 2
Seating deeper shrinks the space the powder burns in and raises pressure. The effect is significant.[4] Seating into the lands raises pressure too (see Chapter 24). Treat either as a new load and work up again from the start load (see Chapter 28).

SAAMI and C.I.P.

Two bodies publish standards for cartridges and chambers.

- **SAAMI**, the Sporting Arms and Ammunition Manufacturers' Institute, is the American industry body. It states pressure limits in psi.
- **C.I.P.**, the Permanent International Commission for the Proof of Small Arms, sets the standards used by the proof houses of its member states. It states pressure limits in bar.

Each publishes drawings of the cartridge and the chamber and a maximum pressure for each cartridge. Each measures pressure its own way. SAAMI's test barrel has a transducer set flush in the chamber wall, near the shoulder. Its face is shaped to fit the case, and the pressure reaches it through the case wall.[5] C.I.P. has a hole drilled in the wall of each test case, so the gas reaches the transducer directly.[6] For most rifle cartridges, C.I.P. takes the pressure 25 mm (about 1 inch) from the breech face.[7] Because the two bodies measure pressure differently, their limits are not simply the same number in different units. For some cartridges, they differ widely.[8]

Some older European cartridges show the gap clearly. SAAMI sets their limits for older rifles, well below C.I.P.'s. SAAMI's limit for the 8x57 IS is 35,000 psi, and for the 6.5x55 Swedish it is 51,000 psi.[9] Data built to C.I.P. limits can therefore exceed SAAMI's figure for the same cartridge. One European powder maker builds its maximum loads to the lower of the two limits.[4] Know which standard your data follows and whether your rifle is built for it.

MAP versus Pmax

SAAMI's limit is the maximum average pressure, or MAP. It is the highest average pressure a maker should load to. SAAMI's pressure figures assume samples of 10 rounds.[10] Single rounds in that sample can run above the average. SAAMI does not cap single rounds. It caps the spread instead. In a sample of 10, the highest and lowest rounds may differ by up to about 20 percent of the MAP.[11] C.I.P.'s limit is called Pmax. It is also a maximum average pressure, set and measured under C.I.P.'s own rules. C.I.P. also sets a statistical ceiling for single rounds at 15 percent above Pmax.[7]

Two points follow. First, a MAP and a Pmax for the same cartridge are not interchangeable, even after you convert bar to psi. Second, neither is a target for your handloads. Both are ceilings for test ammunition fired in test barrels. Your rifle, your components and your weather are not the test conditions.

psi versus CUP

Older data often gives pressure in CUP, copper units of pressure. In the crusher method, a piston sits in a hole drilled through the chamber wall, with a small copper slug above it. When the round fires, the gas drives the piston and crushes the slug.[12] The crushed slug is read against a table and the result is reported in CUP. Modern labs use an electronic transducer instead and report psi.

The two systems measure in different ways. Compare CUP only with CUP, and psi only with psi. For a few older cartridges, SAAMI still gives only a CUP limit.[13]

Contested: converting CUP to psi

The claim. A fixed factor turns a CUP figure into psi.

The physics. A crusher reads the permanent dent the pressure leaves in copper. A transducer reads the pressure as it happens. The two respond to the same shot in different ways.

The test. Fire the same loads in both systems and compare the readings.

The data. Pressures are published both ways. The two systems do not give the same maximum number for each cartridge, and the gap between a cartridge's CUP and psi limits differs from one cartridge to the next. No single factor converts them.[14]

The verdict. Folklore. Keep the two scales apart.

Part II

Equipment

The press, the dies and the other tools do the work of handloading. Each chapter covers one family of tools. It says what the tools do, what types there are and how to choose one.

- Presses and dies (Chapter 5).
- Case cleaning tools (Chapter 6).
- Case preparation and priming tools (Chapter 7).
- Scales and powder measures (Chapter 8).
- Measuring tools (Chapter 9).
- Range equipment (Chapter 10).

The procedures that use these tools come later. The workshop steps are in Chapters 17 to 26. Safe work-ups and function testing are in Part VI (Chapters 27 to 31), and extended range testing is in *The Precision Rifle Handbook*.

Equipping the workshop

Workshop kit lists by function

Judge a tool by what it does, not by its brand. Any tool that does the job with measured repeatability will serve.

- **Starter workshop.**
  - A solid workbench (see Chapter 5).
  - A storage cabinet for powder and primers (see Chapter 2).
  - A rigid single-stage press (see Chapter 5).
  - A priming tool and a primer flip tray (see Chapters 7 and 22).
  - A primer pocket swager or piloted reamer, if you load military brass (see Chapters 7 and 22).
  - A full-length sizing die, a seating die and the shell holder the die maker lists for your cartridge (see Chapter 5).

  - A universal decapping die, used on every batch before cleaning (see Chapters 5 and 18).
  - Case lubricant, a neck brush and dry lube (see Chapters 5 and 19).
  - A case cleaning system (see Chapters 6 and 18).
  - A scale resolving to 0.1 gr, with check weights (see Chapters 8 and 23).
  - A powder measure, a trickler and a funnel (see Chapters 8 and 23).
  - A 6-inch caliper (.001 inch resolution), with base-to-shoulder and bullet (base-to-ogive) comparators (see Chapters 9, 19 and 24).
  - A case trimmer, and a chamfer and deburring tool (see Chapters 7 and 20).
  - A case gauge (see Chapters 9 and 25).
  - Loading blocks (see Chapter 5).
  - A kinetic bullet puller (see Chapter 5).
  - A workshop log (see Chapter 17).
  - A chronograph, with Doppler radar preferred for load testing (see Chapter 10 and *The Precision Rifle Handbook*).
  - Eye and ear protection (see Chapter 2).
  - Current published load data from the powder and bullet makers (see Chapter 15).
- **Rifle and range kit.**
  - A torque driver and a paint pen for the hardware baseline (see Chapters 3 and 10).
  - A solid rest, or a bipod and a rear bag (see Chapter 10 and *The Precision Rifle Handbook*).
  - A spotting scope or a target camera (see Chapter 10 and *The Precision Rifle Handbook*).
  - Targets printed at actual size (see *The Precision Rifle Handbook*).
  - A pocket weather meter that reads air temperature and station pressure, and an insulated ammunition box with a thermometer in it (see Chapters 10 and 30, and *The Precision Rifle Handbook*).
  - A scope level (see Chapter 10 and *The Precision Rifle Handbook*).
- **Precision workshop additions.**
  - Bushing or expander mandrel dies, for fine control of neck tension (see Chapters 5 and 19).
  - A competition micrometer seating die with a sliding alignment sleeve (see Chapters 5 and 24).
  - An analytical scale or automated dispenser resolving to 0.02 gr, once charge error is a real share of your velocity spread (see Chapters 8 and 23).
  - A concentricity gauge for runout (see Chapters 9 and 19).
  - A ball micrometer for neck wall thickness (see Chapters 9 and 19).
  - A motorized 3-in-1 trimmer that indexes on the shoulder datum (see Chapters 7 and 20).
  - An induction or flame annealer, with temperature-indicating paint (see Chapters 7 and 21).
  - A modified-case length gauge (see Chapters 9 and 24).

Which prep tasks to do

Safety and function come first. Inspect cases, probe for incipient head separation (see Chapter 18), bump the shoulder by measurement (see Chapter 19) and trim under maximum case length (see Chapter 20). Always do these.

Every other prep task is optional. None has shown a gain on target in a large-sample test, and each costs money, time or both. The table below measures cost in "rounds' worth," where 1 unit equals the component cost of one loaded round. A tool's cost is the number of rounds its price would buy, and one hour of work counts as 20 rounds (see *The Precision Rifle Handbook*, "Where effort pays"). The total cost for your first 1,000 rounds adds the tool cost to the labor hours. Tasks are listed from least to most expensive over the first 1,000 rounds. Example numbers. Tool costs are approximate.

Task	Chapter	Tools, rounds' worth	Hours per 1,000	Cost, first 1,000	What the evidence shows
Case weight sorting	11	None extra	0.4	8	Unproven. No group benefit on brass from one lot
Primer pocket uniforming and flash-hole deburring	22	60	0.7	74	Unproven. Thin and mixed evidence
Expander mandrel for neck tension	19	95	1.7	128	No link found between neck tension and group size
Trim every case every firing, hand lathe	20	None extra	8.3	167	Unproven
Runout check on every round	19	140	4.2	223	Unproven
Bushing die for neck tension	19	240	0	240	No link found between neck tension and group size
Anneal every firing, flame	21	240	1.4	268	Extends neck life. Unproven on target
Trim every case every firing, motorized trimmer	20	520	−1.9	481	Unproven. Saves time over hand trimming
Anneal every firing, induction	21	1,600	1.4	1,628	Extends neck life. Unproven on target

Even if a task shrank groups by 5 percent, it would add about 1 hit per 100 at 700 yards, and less at 1,000 (see *The Precision Rifle Handbook*). Annealing's proven benefit is longer neck life. That saves brass only if split necks are what retire your cases (see Chapter 21).

Test any optional step before you adopt it. Split one brass lot in half: prepare one half and leave the other alone. Fire the two halves in interleaved 5-shot blocks (see *The Precision Rifle Handbook*). Fire about 35 shots of each to compare mean radius, or about 50 of each to compare velocity SD. Those sample sizes catch a 1.5 to 1 difference 8 times in 10. Catching a 5 percent difference would take about 2,255 shots per half, so a 35- or 50-shot test will almost always show no difference. That result simply tells you the effect is smaller than 1.5 to 1.

Chapter 5

Presses and Dies

Key points

- A press supplies the force and a die supplies the shape. A rigid single-stage press suits load development and small batches.
- A sizing die restores the case, bumps the shoulder and sets neck tension. A bushing works on the outside of the neck, a mandrel on the inside.
- A universal decapping die takes out the spent primer before the first clean. Dirty brass then meets only this cheap die, never the sizing die.
- A competition seating die holds the case and the bullet on one axis. A stem that fits the ogive leaves the tip alone.
- Lube keeps a case from sticking in the sizing die. A loading block keeps every case in view between steps.

Why it matters

Sizing, expanding, seating and crimping all happen inside a die. The die gives the case and the bullet their shape. Its fit and alignment decide how straight they come out. Sizing and seating can tip the neck or the bullet off the case axis. That is runout (see Chapter 19).

Grit scratches dies (see Chapter 18). A case short of lube can stick in a sizing die.

How it is done

A press gives you the leverage to push a brass case into a hardened steel die. With it you size the body, bump the shoulder, seat primers and seat bullets straight in the neck.

Single-stage presses

A single-stage press holds one die in a rigid frame, typically a heavy cast-iron or steel “O-frame”. A shell holder on a steel ram grips the case, and a compound toggle linkage drives the ram (see Figure 5-1).

- **Rigidity and alignment.** There is no moving toolhead or turning carousel. A solid O-frame stretches and flexes very little under heavy sizing loads, so the die and the ram stay in line.
- **Process control.** You work in batches, one step at a time. You can see and feel every case before it moves on.

Turret presses

A turret press holds three to seven dies in a rotating head above a single ram.

- **How it works.** You can index the head by hand or with an auto-advance linkage to bring each die over the case in turn. Or you can run a whole batch through one die before rotating to the next.
- **Trade-offs.** Your whole die set stays adjusted in the head. The cost is a little play in the rotating head, which lets it tilt slightly. Modern heavy-duty turrets clamp down firmly during the stroke.

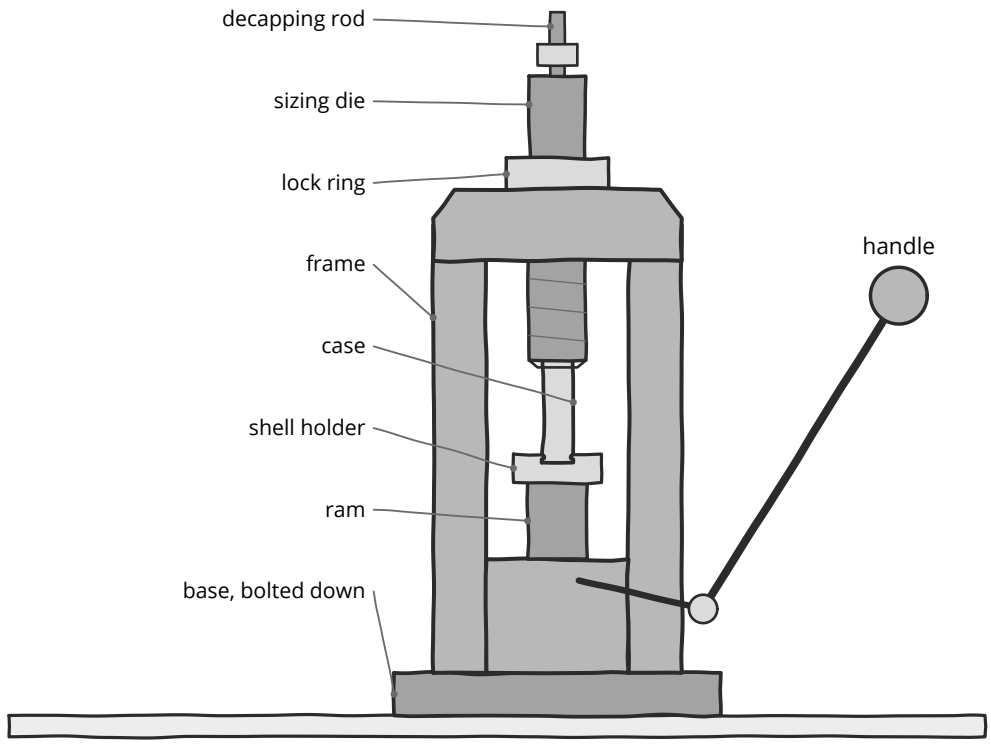

Figure 5-1. A single-stage press and its parts.

Progressive presses

A progressive press works on several cases at once, across four to eight stations on a rotating shell plate. Each pull of the handle moves every case to the next station and drops a finished round off the last one.

- **Stations.** A typical rifle setup takes cases already sized and trimmed in a separate prep pass. Station 1 primes. Station 2 throws a powder charge by volume. Station 3 holds a powder-check die. Its rod rests on the powder and warns of an empty or double-charged case. It backs up looking into each case, but never replaces it (see Chapter 17). Station 4 seats the bullet. Station 5 applies an optional crimp.
- **Primer feed.** Primers feed from a vertical tube that holds 100, inside a steel blast shield (see Chapter 7).

Inline arbor presses

An arbor press is a small rack-and-pinion hand press for threadless benchrest dies, such as neck-sizing and seating dies.

- **Feel.** It drives the die directly, with no compound leverage. Your hand feels the force each neck needs to size and each bullet needs to seat, so you notice at once when neck tension varies (see Chapter 19).

The table sums up the four types.

Press type	How it operates	Leverage and setup	Best suited for
Single-stage press	Holds one die at a time in a rigid O-frame. The ram strokes one case through one step.	High (compound linkage). Little frame deflection.	Precision rifle load development, small batches and learning the craft.
Turret press	Holds several dies in a rotating head above a single ram. The head rotates between steps.	High. Dies remain set in the head between operations.	Moderate-volume loading with fast caliber changes.
Progressive press	Holds multiple dies and cases simultaneously. Every stroke produces a finished round.	Moderate to high. Multi-station shell plate auto-indexes.	High-volume competition and practice ammunition. Semi-automatic rifles.
Inline arbor press	Hand-operated rack-and-pinion benchrest press driving threadless hand dies.	Direct hand feel (no compound link). Sensitive force feedback.	Benchrest match ammunition. Seating at the range with threadless hand dies.

Shell holders

A hardened steel shell holder fits the press ram and grips the case rim. A standard shell holder has a nominal deck height of .125 inch, from the floor under the case head to its top face. Use the shell holder the die maker lists for your cartridge. Sizing die setup starts from the shell holder (see Chapter 19).

Sizing dies

Sizing dies restore the outside dimensions, push back the shoulder and set neck tension (see Chapter 19).

- **Full-length sizing dies.** A full-length die sizes the whole body, squeezes the neck and bumps the shoulder back so the case chambers freely. Most have a decapping spindle with an expander ball. As the case comes out of the die, the ball pulls back through the neck and sets its inside diameter. If the spindle is out of line, or the inside of the neck has no dry lube, the ball can pull the neck off center.
- **Neck sizing dies.** A neck die sizes only the neck and leaves the fire-formed body and shoulder alone. It works the brass less. But a neck-sized case has little clearance in the chamber. It can chamber stiffly or fail to extract in dust, in a semi-automatic or in another rifle.
- **Bushing dies.** A bushing die, full-length or neck only, replaces the fixed neck with an interchangeable steel or carbide bushing. Bushings come in steps of .001 inch in diameter. Measure the neck of a loaded round and pick a bushing a few thousandths smaller. That sets neck tension in one step without overworking the brass or pulling an expander ball back through the neck. Because a bushing sizes only the outside of the neck, any variation in wall thickness transfers to the inside diameter. Brass springs back after it leaves the bushing, so the neck reads larger than the bushing (see Chapter 19).
- **Body dies.** A body die sizes the body taper and bumps the shoulder back without touching the neck. Pair it with a neck die or an expander mandrel.

Expander dies

- **Expander mandrel dies.** An expander die pushes a polished carbide or hardened steel mandrel down through the mouth to open an undersized neck from the inside. It sets the

inside diameter and pushes any variation in wall thickness to the outside. The neck springs back a little smaller than the mandrel. A mandrel can add runout too, so measure your own (see Chapter 19).

- **Two-step neck expanding dies.** A two-step expander has a plug with two diameters. The first step opens the neck to just under bullet diameter, for neck tension. The second is a short, larger step. It opens the mouth to bullet diameter or slightly over, so a flat-base bullet starts square. Turning the plug deeper adds a slight flare.[1] It is used after sizing, for flat-base bullets (see Chapter 20).

Decapping dies

A universal decapping die pushes out the spent primer without sizing the case. Run every batch through it before the first clean (see Chapter 18). Cleaning then removes grit and grime before the case touches your sizing die. Knocking the primers out first drops their lead residue into the press's catch tray and lets cleaning solution reach the primer pockets.

Seating dies

Seating lines the bullet up with the bore, sets the overall length and the jump to the rifling, and leaves the bullet held by the neck. Alignment and seating depth matter both for precision and for predictable pressure. The inside of the die decides how straight the bullet goes in and whether its nose gets damaged (see Chapter 24).

- **Standard 7/8-14 seating dies.** A standard seating die has a hardened steel body with a crimp shoulder inside and a threaded seater stem. It is machined with generous clearance to take brass fired in many different chambers. You set the bullet loosely in the case mouth, and the ram drives the round up into the die. The bullet base enters the case neck before the die body fully guides the bullet shank. If the mouth chamfer is uneven or the neck wall varies in thickness, the bullet can start crooked and add runout.
- **Competition micrometer seating dies.** A competition seating die has a spring-loaded sliding sleeve with close clearance. As the ram rises, the sleeve slides down over the neck and the whole bearing surface of the bullet before seating begins. It holds case and bullet on one axis while the stem pushes the bullet in. A micrometer top is graduated in steps of .001 inch and has a bezel you can zero. It gives small, repeatable changes when you switch bullets or adjust jump. These dies have no crimp shoulder, so they leave the neck tension alone.
- **Arbor press seating dies.** Threadless steel seating dies work in a small hand arbor press. The sized case and the bullet go inside the close-fitting die body, and you press a sliding stem down by hand or with the arbor's rack.
- **Seater stems.** The stem is the part inside the die that pushes on the bullet. A standard stem has a broad, shallow cup made for round-nose and flat-base spitzer bullets. On a sleek Very Low Drag (VLD), secant or polymer-tipped bullet, a standard stem can bottom out on the point instead of the ogive (see Chapter 14). That can deform a polymer tip or crush a hollow-point meplat. A VLD stem has a deep, steep taper that meets the bullet lower on its solid ogive and leaves the tip alone. One bullet maker calls for VLD stems with its hybrid bullets.[2]

Crimp dies

A crimp holds the bullet against recoil and magazine feeding (see Chapters 24 and 26).

- **Roll crimp dies.** A roll crimp die has a curved shoulder inside that rolls the case mouth into a cannelure or crimp groove on the bullet. A roll crimp depends on case length. A case .010 inch longer than the rest is driven hard into that shoulder and can buckle the case shoulder outward, so the round will not chamber. A short case gets no crimp at all.
- **Taper crimp dies.** A taper crimp die has a shallow, smooth taper inside, typically 0.5 to 1 degree. The taper squeezes the mouth inward against the bullet shank. It irons out mouth flare without biting into the jacket or rounding the sharp edge of the mouth.
- **Collet crimp dies.** A collet crimp die uses a four-jaw spring-steel collet inside a tapered sleeve. At the top of the stroke, the shell holder pushes the collet up into the taper, and the jaws squeeze the case mouth evenly from all sides. The crimp force comes from the ram stroke, not the case length, so shoulders do not buckle. It can crimp a match bullet with no cannelure by pressing a light crimp into the jacket without pushing the bullet off center.

Case lube

A lube pad rolls a thin film onto the body. Spray lube mists cases standing in a loading block. Dry lube on a neck brush eases the expander ball through the neck (see Chapter 19).

Stuck-case removers

A case short of lube can stick in a sizing die. A stuck-case remover drills and taps its head and draws it out with a screw. Use a remover made for your die (see Chapters 19 and 31).

Bullet pullers

When a charge or a seating depth must be corrected, pull the bullet without damaging it (see Chapter 25).

- **Kinetic (inertia) pullers.** A plastic hammer holds a three-part aluminum collet with an O-ring, or a standard shell holder. The round sits in the collet with the bullet toward the head of the hammer. Strike the hammer sharply on a solid surface. The sudden stop lets the bullet's momentum overcome the neck's grip. The bullet slides out of the neck into the hollow head without damage to its shank and without spilling powder.[3] A foam earplug in the bottom of the cavity keeps a soft point or a polymer tip from deforming.
- **Press-mounted collet pullers.** A collet puller threads into a standard 7/8-14 press station and takes a spring-steel collet sized for the caliber. The ram raises the round until the bullet sits inside the collet jaws. A lever or knurled cam on top closes the collet on the exposed bearing surface. Lowering the ram draws the case down while the collet holds the bullet. The powder stays in the upright case, so you can weigh it to find a charge error. Then dispose of it (see Chapter 2).

The workbench and loading blocks

Set up the press on a solid workbench. A loading block holds cases upright in rows between steps. When you charge, the charged cases sit on one side of the block and the empty ones on the other (see Chapter 23). Keep only one powder and one primer type on the workbench, and store the rest in their cabinet (see Chapter 2).

Case Cleaning Tools

Key points

- Deprime first. A coarse clean protects dies and shows defects. A final clean after sizing and trimming takes off the lube and chips.
- Dry tumblers scrub cases in walnut or corncob media. Their dust carries lead, so wear a fitted respirator when you empty them.
- Wet tumblers with stainless steel pins clean inside and out, down to bare metal. Too much citric acid or a long soak weakens the brass.
- Ultrasonic cleaners loosen carbon by cavitation, without abrasion or airborne lead dust.
- Dry every case fully. Water trapped in a pocket or flash hole can kill a primer or spoil a powder charge.

Why it matters

Fired cases carry carbon, powder residue and range grit. Grit wears sizing dies and chamber walls. Dirt also hides cracks. Clean cases measure true (see Chapter 18).

Each cleaning method trades speed against wear on the brass. Choose a method based on your batch size, the time you have and how clean you want the cases.

How it is done

Depriming comes first, with a universal decapping die (see Chapter 5). A coarse clean then takes off grit and heavy grime before inspection and sizing. A final clean after sizing and trimming takes off the lube and chips (see Chapter 18). Shine is cosmetic.

Dry tumblers

A dry vibratory tumbler uses a motor with an off-center weight to shake a bowl of dry media. The media rolls in a ring and scrubs the cases clean in two to four hours. Crushed walnut hull has sharp, angular edges that strip stubborn outside carbon and baked-on soot quickly. Corncob (14/20 or 20/40 mesh) is softer and more absorbent. It burnishes brass to a high gloss rather than cutting heavy deposits. A capful of liquid polymer polish or mineral spirits cuts the dust and leaves a thin film that slows tarnish. Strips of used dryer sheet collect loose dust.

Dry tumbling makes fine dust that carries lead from fired primers. Use a sealed bowl. Run it outdoors or in a well-ventilated room. Wear a fitted respirator with N100 or P100 filters when you empty the media (see Chapter 2).[1] Dry media also packs into primer pockets and lodges in flash holes. Inspect every case after tumbling and clear any blocked flash holes by hand (see Chapter 18).

Wet tumblers with pins

A rotary wet tumbler turns a watertight drum filled with water, cases and magnetic stainless steel pins. Add a little mild liquid detergent to lift oils and a pinch of citric acid (about 1/4 teaspoon per gallon). The pins clean the inside walls, the necks and the primer

pockets down to bare metal in one to two hours. Pins can lodge endwise in a flash hole or crosswise in a small neck. Check every case after you separate the media (see Chapter 18).

Too much citric acid, or a long soak, leaches zinc out of the brass. This is dezincification. It leaves a telltale pink color and a weaker case. The used water carries lead from primer residue. Wear gloves or wash up after handling it (see Chapter 2).

Ultrasonic cleaners

Piezoelectric transducers in the tank floor send sound waves through the liquid. The waves form tiny vapor bubbles that collapse hard against the brass. This is cavitation. It loosens carbon inside and out without abrasion. Run the tank for several minutes before you add brass. This degassing drives off dissolved air that would otherwise weaken the cavitation.

An ultrasonic cleaner strips carbon without making airborne lead dust. It leaves a matte, satin finish rather than a shine. The used liquid still carries lead from primer residue. Wear gloves or wash up after handling it (see Chapter 2). Rinse and dry the cases fully before loading.

Separating and drying

Separate cases and pins with a rotary sifter and a magnetic pick-up wand. Then dry the cases fully before you anneal, size or prime them. A food dehydrator below 180 °F or a warm air rack does the job. Water trapped in a pocket or flash hole can kill a primer or spoil a powder charge (see Chapter 18).

Case Preparation and Priming Tools

Key points

- Choose a trimmer to suit how many cases you load. A lathe trimmer, a motorized 3-in-1 trimmer and a press-mounted trim die all cut the case back to length.
- An inside chamfer and an outside deburr smooth the mouth after trimming. A shallow chamfer suits long boat-tail bullets.
- A swager removes a military pocket crimp without removing metal. A piloted reamer with a depth stop cuts away only the crimp.
- Flame, induction and salt-bath annealers all soften the neck. Temperature-indicating paint sets the dwell of any of them.
- A hand priming tool lets you feel each primer bottom. A press arm or a progressive feed hides that feel.

Why it matters

These tools work on the case between the first clean and the loaded round. A trimmer keeps every case in a batch at one length. Chamfer and deburring tools give the bullet a smooth entry. Pocket tools ready the pocket for a new primer. An annealer softens necks that firing and sizing have hardened. A priming tool seats each primer firmly on the pocket floor.

Each tool trades speed against gentle brass handling and repeatable dimensions. Annealing, pocket uniforming and flash-hole deburring are optional (see “Which prep tasks to do” in the Part II opener).

How it is done

Trimmers

Firing and sizing draw brass forward into the neck, so the case grows. A case that is too long jams its mouth into the end of the chamber neck. That can spike pressure dangerously (see Chapter 20). Choose a trimmer to suit how many cases you load. Each type locates the case on a different surface.

- **Manual lathe trimmers.** A lathe trimmer holds the case head in a collet or a universal shell holder on a rigid base. You turn a high-speed steel or carbide cutter against the mouth with a hand crank or a cordless drill. A pilot sized for the caliber rides in the neck and keeps the cut square to the case axis. A standard lathe trimmer indexes off the case head, so an adjustable micrometer stop sets the length from head to mouth. A rotating or carbide pilot cuts friction and keeps the pilot from galling the inside of the neck.
- **Motorized 3-in-1 trimmers.** A motorized trimmer feeds the case into a spinning carbide cutter head. Many index off the shoulder datum rather than the case head, so the neck length past the shoulder stays even. A trimmer that locates on the shoulder cuts even lengths only when the shoulders are sized evenly (see Chapter 19). The head has three cutting edges. In two to three seconds per case it trims to length, cuts the inside chamfer and deburrs the outside. Three hand jobs become one pass.

- **Press-mounted motorized trim dies.** A motorized trim die screws into a single-stage or progressive press. The die body full-length sizes the case while a motor at the top of the die spins a carbide end mill at 3,000 rpm or more. At the top of the stroke, the mill shears off any neck that sticks out past the die, and a port draws the chips into a shop vacuum. Because a vacuum can ignite spilled powder, run this tool only during case prep with all powder and primers put away. It trims several hundred cases an hour. The cut leaves a flat, square edge, so you still need to chamfer the inside of the mouth after the final clean, just before priming (see Chapter 20).

Chamfer and deburring tools

Trimming leaves a sharp corner inside the mouth and a burr outside. An inside chamfer tool cuts a smooth entry bevel for the bullet base. A standard tool cuts a steep 45-degree angle. A Very Low Drag (VLD) chamfer tool cuts a shallower 15- to 22-degree taper. That shallow angle guides a long boat-tail bullet into the neck without peeling copper from the jacket. An outside deburring tool bevels the outer edge of the mouth so no burr keeps the round from chambering freely. Both tools can be turned by hand or mounted on a motorized case prep center. In the case-prep order, chamfering and deburring come after the final clean, just before priming (see Chapter 20).

Primer pocket tools

These tools remove military crimps and clean, square or deburr the pocket and flash hole (see Chapter 22).

- **Primer pocket swagers.** Military brass, such as 5.56x45mm NATO and 7.62x51mm NATO, has a crimp staked into the case head to hold the primer under automatic fire. It is a full ring or three stab marks.[1] A swager presses that displaced brass back into the pocket wall. A bench-mounted swager pushes a hardened support rod through the case mouth to back up the web while a lever drives a carbide mandrel into the pocket. A press-mounted swager uses a die body and a cup on the ram of a single-stage press. Swaging removes no metal and keeps the case head at full strength. It leaves a smooth, rounded entry that guides a new primer in. It is the better choice for large batches.[1]
- **Pocket reamers and countersink cutters.** A reamer cuts the crimp away with a fluted cutter turned by hand, in a cordless drill or on a motorized case prep center. Reaming is fast. But an aggressive or unguided cutter held off center can remove supporting wall brass or leave an oval, oversized pocket mouth. A pocket cut too far may not support its primer properly.[1] A piloted reamer with a depth stop collar removes only the crimped ring.
- **Pocket brushes and scrapers.** Small stainless or brass wire brushes and flat scrapers clean baked-on carbon from the pocket floor between firings. Built-up carbon would hold the next primer high.
- **Primer pocket uniformers.** A uniformer is a flat-bottomed carbide cutter with a shoulder stop. In a handle or a motorized spindle, it cuts the pocket floor flat and square to the case axis, to one depth across the lot. It also clears manufacturing burrs.
- **Flash-hole deburring tools.** A punched flash hole often leaves a ragged burr inside the case web. A deburring tool has a long shaft that enters through the case mouth, a conical pilot that centers it and a cutting head that shaves the burr flat. A fixed stop collar keeps the cutter from enlarging the flash hole.

Annealers

Firing and sizing work-harden brass. Hard necks grow brittle and split. Controlled heat softens the neck and shoulder and leaves the case head hard (see Chapter 21). The three methods are flame, induction and molten salt.

- **Flame annealers.** A flame annealer turns cases on a motorized wheel or rollers through one or two torches burning propane or MAPP gas. The case must keep turning. A case that sits still heats unevenly and ends up harder on one side. Dwell is usually four to eight seconds. The flame is set so its inner blue cone touches the junction of neck and shoulder without heating the lower body.
- **Induction annealers.** An induction annealer passes high-frequency alternating current through a copper work coil. Its field heats the case neck quickly and evenly, in two to three seconds. With no flame, it also avoids the drift that torch pressure and drafts bring. Some units read the conductivity and mass of the case and set the power and time themselves.
- **Molten salt baths.** A salt bath melts a 50/50 mix of sodium nitrate and potassium nitrate in a temperature-controlled electric pot at 900 to 1,000 °F (482 to 538 °C). You dip the case neck for a short dwell, typically four to six seconds. Liquid salt passes heat very evenly. Any moisture carried into the pot causes an instant, violent steam explosion that throws molten salt. Cases must be fully dry. Nitrate salt feeds a fire. Keep anything that burns away from the pot, and store the salt sealed and dry. Wear a full face shield, heavy heat-resistant gloves and a leather apron.
- **Temperature-indicating paint.** Temperature-indicating paint, or lacquer, melts at a rated temperature. Use it to set the dwell of any annealer. A mark inside the neck shows whether the brass got hot enough to soften. The paint shows the heat, not the hardness, so it is an indirect check. A mark low on the body, near the head, shows whether the heat stayed out of the head and web. The head and web must stay hard to contain firing pressure (see Chapter 21 for the ratings and the setup).

Priming tools

Priming presses a small explosive cup into the case head. Steady, even force seats it firmly on the pocket floor without crushing the pellet or bending the cup (see Chapter 22).

Method	How it seats the primer	Tactile feel	Best suited for
Hand priming tool	A squeeze lever pushes a primer punch into a case held in its own shell holder.	Excellent. You feel the primer bottom.	Precision batches, and priming away from the workbench.[2]
Press priming arm	An arm on the press ram holds the primer. The ram lowers the case onto it at the bottom of the stroke.	Moderate. The press's leverage hides slight resistance.	Small batches on a single-stage press with no extra tool.
Bench-mounted priming tool	A compound lever pushes the primer home, vertically or horizontally.	Good. Smooth leverage with a clear stop.	Moderate to large batches with little hand fatigue.
Progressive press priming feed	Primers feed from a vertical tube into a sliding or rotating punch at one station.	Low. The machine's cycle hides the feel of each primer.	High-volume loading. Needs careful tube handling.[3]

The tool's leverage decides whether you seat by feel or against a mechanical stop.

- **Hand priming tools.** A squeeze handle drives a steel primer punch up into a shell holder. You feel the moment the anvil feet touch the pocket floor, then the slight extra resistance

as the cup seats below flush. Most modern hand tools have a safety gate that separates the primer on the punch from the primers in the tray. If that primer pops, the gate keeps it from setting off a chain fire in the tray.[2] Hand tools take their own snap-in shell holders or standard press shell holders (see Chapter 5). They let you prime away from the workbench.

- **Press priming arms and ram punches.** Many single-stage presses come with a priming arm that swings into a slot in the ram, or a priming cup at the bottom of the stroke. A press priming arm needs no extra tool, but the press's leverage hides resistance. That leverage is often between 15 and 25 to 1. It is easy to crush the pellet or flatten the cup against a tight or crimped pocket without noticing.
- **Bench-mounted priming tools.** A bench-mounted tool (such as those from RCBS, Forster and Primal Rights) bolts to the edge of the workbench. A dedicated lever or rack-and-pinion drive gives a smooth, straight seating stroke. Many have an adjustable stop that seats every primer to the same depth below the case head. Set the stop so primers still bottom out in the deepest pockets of the lot, or a shallow stop will leave them high. Primers feed from a horizontal tray or a vertical magazine tube.
- **Progressive press priming systems.** A progressive press primes at one station of its cycle. A slide bar, rotating disc or shuttle carries a primer from a vertical magazine tube over the seating punch as the ram cycles. With several dies working at once, you feel almost nothing of the seating. Keep the primer tube inside its heavy steel blast shield. If a pinched or upside-down primer goes off, the shield contains the fragments and vents the blast straight up, away from your face and eyes.[3]

Primer handling tools. These tools turn primers the right way up and load them into a priming tool. A primer seating depth gauge checks how deep they sit (see Chapter 9).

- **Primer flip trays.** A flip tray is a shallow pan with ridges molded into its floor. Pour the primers from the maker's sleeve into the tray and swirl it gently. Upside-down primers flip over the ridges until all 100 sit anvil side up. Trays of anti-static plastic or heavy metal drain off static charge. Working from a tray also keeps skin oil off the primer cups. From the tray, load primers straight into a hand tool or pick them up into a magazine tube.[2]
- **Primer pick-up tubes.** A pick-up tube is a long, thin aluminum or brass tube with a flexible plastic tip at one end and a cotter pin at the other. Press the tip over an anvil-up primer in the flip tray, and the primer goes into the tube. Repeat until the tube holds all 100. To load a bench tool or progressive press, invert the tube over the magazine and pull the cotter pin so the primers slide in. A full tube is a column of primers that can go off together. Wear safety glasses, and fill and empty the tube gently (see Chapters 2 and 22).[4]

Scales and Powder Measures

Key points

- A beam scale needs no power and never drifts with room temperature, so it makes a lasting reference. A digital scale reads fast but reacts to temperature swings, drafts, static and radio noise.
- A scale that zeroes properly can still read wrong at load weight. Check it with reference weights near your target charge.
- A measure throws ball and fine flake powders evenly and long stick powders less so. A baffle keeps its throws even as the hopper empties.
- A trickler tops up a light charge on the scale. An automated dispenser weighs and trickles each charge for you.
- A metal funnel that fits the neck puts every kernel in the case. A drop tube settles long kernels closer together.

Why it matters

You measure powder by weight or by volume. The charge must stay within tight limits to keep pressure safe and velocity consistent (see Chapter 23).

These tools dispense and weigh each charge, and each has its own weak spots. An electronic scale can drift. Any scale can read true at zero and wrong at charge weight. A powder measure's throws vary with kernel shape and hopper level, and static can hold kernels inside a plastic funnel. Knowing how each tool works tells you what to watch for and which one to buy.

How it is done

Scales

Scales differ in how they sense weight and in what throws them off.

- **Mechanical beam scales.** A beam scale balances an aluminum beam on polished agate or hardened steel knife edges. Sliding poise weights mark steps of 10 gr, 1 gr and 0.1 gr. Magnetic damping settles the beam quickly, without friction. A leveling screw in the base lines the pointer up with the zero mark. A beam scale needs no power, never drifts with room temperature and ignores electrical or radio noise, making it a reliable long-term reference. Keep the knife edges and agate bearings clean with a soft brush. Read the pointer square on, at eye level, to avoid parallax.
- **Digital strain-gauge scales.** An electronic scale uses a cantilever load cell fitted with foil strain gauges. A charge on the pan bends the cell very slightly. That changes its electrical resistance, and the scale turns the change into a reading. The reading comes in a fraction of a second, but the scale is sensitive to its surroundings. Temperature swings make it drift, so let it warm up as its maker directs before you calibrate it. Drafts from vents or fans move the reading. Static on a plastic pan or on your clothes adds a false weight. Radio interference from phones, fluorescent light ballasts or Wi-Fi routers can make the numbers

wander. Use a grounded metal pan and keep your phone away from the workbench. Re-zero often during a session.

- **Electromagnetic force restoration (EMFR) balances.** A laboratory-grade EMFR balance holds the pan still with a magnet coil. It reads the weight from the current the coil needs. An EMFR scale resolves 0.02 gr or 0.001 gram, about the weight of one kernel of extruded rifle powder. It is very sensitive, so it comes with a glass or acrylic draft shield. Set it on a heavy granite slab to damp vibration.

  A finer scale pays off only when scale error makes up a meaningful share of your velocity spread. Calculate how much velocity spread your current scale adds before you buy a finer one (see Chapter 23, "What a charge error costs"). Verify whichever scale you use at the start of every session (see Chapter 23). You can use the same scale to weigh cases for water capacity (see Chapter 11).

Check weights

Check weights are certified Class F or ASTM reference masses, often marked in grams. A scale that zeroes correctly is not always accurate across its range. Use check weights near the charges you actually load. For example, combine a 20 gr and a 30 gr weight to check the scale at 50.0 gr (see Chapter 23 for the check and the conversion from grams). Handle check weights with plastic tweezers or clean cotton gloves. Oil from your fingers changes their mass for good.

Powder measures

A measure throws a charge by volume.

- **Volumetric powder measures.** A drum measure has a rotating drum under a powder hopper. The drum holds a cavity you set by micrometer. Raise the handle to fill the cavity. Lower it to turn the cavity over the spout and throw the charge. A measure is fast and usually very accurate, especially with ball powders.[1] How well it meters depends on the powder's shape (see Chapter 13).[1] Ball powders and fine flake powders flow like liquid and often throw within ±0.05 to ±0.1 gr. Long extruded stick powders can bridge across the cavity mouth or shear against the drum edge. When the drum cuts kernels, you feel a crunch and throws can vary by ±0.3 to ±0.5 gr. Work the handle with the same smooth rhythm every time. Pause briefly at the top and bottom of each stroke (see Chapter 23).
- **Powder baffles.** A curved or V-shaped metal baffle sits in the lower third of the hopper, just above the drum. Without a baffle, a tall column of powder packs the cavity tighter when the hopper is full, so throws start heavy and lighten as the hopper empties. A baffle takes the weight of the powder column off the drum so throws stay consistent from the first case to the last.

Tricklers

A trickler tops up a charge on the scale. A manual trickler has a heavy, steady base, a small powder reservoir and a threaded feed tube. Turn the knob, and a spiral inside the tube moves a few kernels at a time out into the scale pan. Throw a charge slightly light from a measure. Then trickle it up to the exact weight in seconds (see Chapter 23).

Automated dispensers

An automated dispenser weighs and trickles each charge for you. It joins an electronic scale to a motorized trickler. Makers include RCBS, Hornady and Lyman. A large tube feeds the first 90 to 95 percent of the charge fast. A small tube or a stepper motor then trickles single kernels up to the programmed weight. Modern units learn how a given powder flows, so they overshoot less. If a charge overshoots the target, pour it back into the hopper and dispense it again. Never seat a bullet over a charge that overshot. Check the dispenser's scale with check weights like any other (see Chapter 23).

Funnels and drop tubes

A funnel guides the charge into the case. A drop tube settles it.

- **Caliber-matched powder funnels.** An aluminum or brass funnel is machined to fit snugly over one neck size. A universal plastic funnel builds static, and fine flakes or kernels cling to its walls and drop late. A metal funnel drains the static, so every kernel goes into the case.
- **Drop tubes.** A drop tube is an aluminum or brass tube that sits between the funnel and the case mouth. It is typically four to six inches long. As the powder falls down the tube, long stick kernels line up and nest closer together in the case. That raises the bulk fill density by 2 to 4 percent. A charge that would be lightly compressed can then settle lower, so the bullet seats with less push-back or crunching (see Chapter 23).

Measuring Tools

Key points

- A caliper measures case length, loaded length and neck diameter. Comparators clamped to its jaws read base to shoulder and base to ogive.
- Use the same comparator insert every time. A different insert gives a different number.
- A runout gauge reads the total indicated runout (TIR) of a neck or a seated bullet. A ball micrometer reads neck wall thickness.
- A case gauge checks a case against standard chamber dimensions, not your rifle's throat. A modified-case gauge or a lands-gauge dummy finds the lands.
- You can make the probe for incipient head separation from a paper clip.

Why it matters

Case prep and assembly run on measured numbers. You size to a base-to-shoulder reading, trim to a length and seat to a base-to-ogive length. These tools take those readings.

A reading means something only if you can repeat it. Use the same tool, the same insert and the same light touch every time. Then a change in the reading is a change in the brass or the round, not in the way you measured.

How it is done

Calipers

A dial or digital caliper of hardened stainless steel reads in steps of .001 or .0005 inch. Use it to measure case length, loaded round length and outside neck diameter (see Chapters 19, 20 and 24). Clean the jaws and check them against a zero stop or a reference standard before every session.

Base-to-shoulder comparators

The case's fit in the chamber depends on its base-to-shoulder length, from the head to a datum line on the shoulder (see Chapter 4). A comparator body clamps to the caliper jaws and holds a hardened steel insert that meets the shoulder at a set diameter. Choose the insert its maker lists for your cartridge, and use the same insert every time. The absolute reading depends on the insert. The difference between two readings does not.

Bullet comparators

A bullet comparator is an aluminum body that clamps to a caliper. It holds an insert sized for each caliber. The insert rests on the bullet's ogive at a fixed diameter, near where the lands meet the bullet, to measure cartridge base to ogive (CBTO; see Chapter 24). Overall length to the tip (COAL) can vary by .005 to .012 inch from round to round because bullet tips vary, even when the ogives match. CBTO is much more consistent and tracks jump to the lands directly.[1] Use the same insert every time and write down which one.

Ball and tubing micrometers

A flat-anvil micrometer cannot measure the curved wall of a neck accurately. A ball micrometer has a round anvil that sits inside the neck against a flat spindle outside. It reads neck wall thickness to .0001 inch, so you can find thick and thin spots around the neck (see Chapter 19).

Runout gauges

A runout gauge, or concentricity gauge, rests the case on ball-bearing rollers under a dial test indicator. The indicator reads in steps of .0005 or .0001 inch. Turn the case, and the dial shows the total indicated runout (TIR) of the neck or of the seated bullet. Where the runout first shows points to its source (see Chapter 19).

Case gauges

A drop-in case gauge is a hardened steel cylinder reamed to the minimum SAAMI or C.I.P. chamber dimensions, with stepped reference ledges at the head and the mouth. Drop a sized case in. The ledges show at a glance whether the shoulder datum and case length are within limits for a factory chamber. A case too wide in the body will not drop in fully (see Chapter 25).

Lands gauges

Two tools find where the lands start in your chamber. Pick one and keep to it (see Chapter 24).

Modified-case gauge. A modified-case gauge is a rigid tube with a sliding plunger rod. A case drilled and tapped at the head (5/16-36 thread) screws onto it. In the chamber, the rod pushes a test bullet forward until its ogive just touches the lands. A bullet comparator then reads the CBTO at touch (see Chapter 24).

Lands-gauge dummy. A lands-gauge dummy is an unprimed, empty case with light neck tension and a bullet seated long. Mark the case so it can never be mistaken for a live round. When you close the bolt, the lands push the bullet back into the neck, and its new CBTO gives the distance to the lands (see Chapter 24).

Primer seating depth gauges

A primer seating depth gauge has a spring-loaded center probe in a wide, flat base that rests across the case head. It reads how far the primer cup sits below the head in steps of .0005 inch, so you can check the seating depth against its target (see Chapter 22).

Probes and borescopes

A feeler probe is a stiff wire with a short right-angle bend at the tip, filed to a point. Drawn up the inside wall of a fired case, it catches on the internal groove of an incipient head separation (see Chapter 18).

You can make one from a paper clip. Straighten the clip. Bend the last eighth of an inch to a right angle. File the tip to a point.

A digital borescope lets you see erosion or stress cracks inside the case.

Range Equipment

Key points

- A chronograph is your primary safety gauge in a work-up. It tracks velocity against your velocity ceiling and measures velocity spread.
- Every chronograph adds its own noise to each reading. For work-ups and load testing, prefer Doppler radar because light and weather do not affect it.
- A barrel-mounted magnetic unit works for velocity work-ups, but it can shift point of impact. Test it before you shoot groups with it on.
- A steady rest and clear targets let you check function and basic precision without shooter error blurring the result.
- A thermometer in the ammunition box and a torque driver with witness paint keep session conditions and rifle hardware under control.

Why it matters

Safe work-ups and function testing depend on the gear you bring to the range. A chronograph tells you when a work-up reaches your velocity ceiling (see Chapter 28). A noisy or inaccurate unit blurs velocity spread and can let you pass a pressure limit unnoticed. A steady rest and a clear target setup keep shooter movement out of function checks and group tests.

Conditions you cannot control still have to be recorded. Ammunition temperature, air temperature and station pressure all change from one range trip to the next. Readings taken at every session let you separate load behavior from weather later. Long-range optics, wind meters, and extended field gear are covered in *The Precision Rifle Handbook*.

How it is done

Chronographs

Velocity data is only as good as the instrument. Every chronograph adds its own error to each reading. That error adds to the true spread of your ammunition. The two combine like the sides of a right triangle.

$$\text{measured SD} = \sqrt{(\text{true SD}^2 + \text{instrument SD}^2)}$$

For example, ammunition with a true SD of 5 fps shows 15.8 fps when read through 15 fps of instrument noise.[1]

Worked example. Example numbers. Not load data.

Your load has a true SD of 10 fps.

$$\text{Noisy unit, 15 fps of noise: } \sqrt{(10^2 + 15^2)} = \sqrt{325} = 18.0 \text{ fps}$$
$$\text{Good unit, 3 fps of noise: } \sqrt{(10^2 + 3^2)} = \sqrt{109} = 10.4 \text{ fps}$$

Through the noisy unit, a 5 fps load reads 15.8 fps and a 10 fps load reads 18.0 fps. The true SD doubled, but the reading moved about 2 fps. A noisy chronograph cannot tell a good load from an ordinary one (see Figure 10-1).

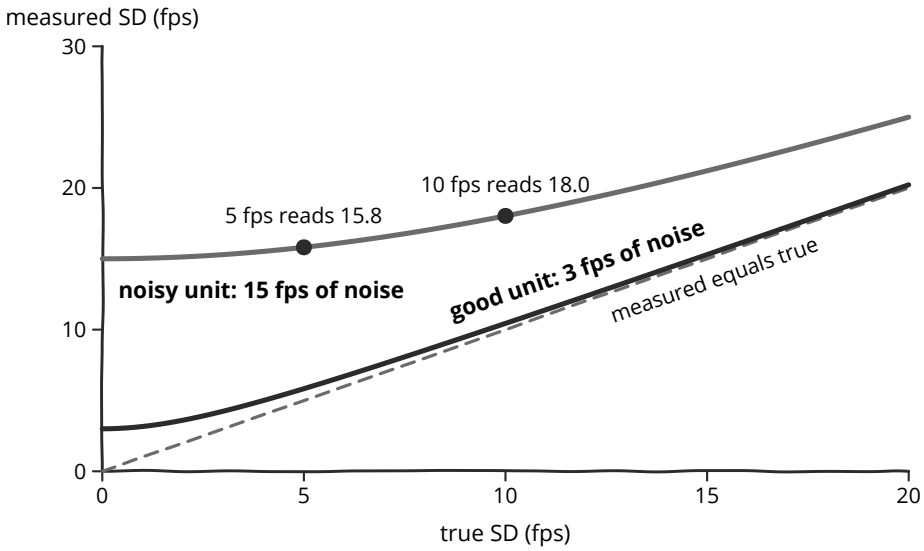

Example numbers. Not load data.

Figure 10-1. Measured SD against true SD for two chronographs. The noisy unit hides the difference between good and ordinary ammunition.

If you know your instrument's noise, you can take it back out.

```
true SD = √(measured SD² − instrument SD²)
Example: √(12² − 3²) = √135 = 11.6 fps
```

Use this only with a noise figure you trust. A guessed figure gives a guessed answer.

There are three common chronograph types used in handloading. For load testing, prefer Doppler radar.

Type	How it reads	Practical considerations
Doppler radar	Tracks the bullet by radar from beside the muzzle	Points along the bullet's path. Light and weather do not affect it.
Optical	The bullet passes over light sensors in front of the muzzle	Sunlight, cloud shadows, poor alignment and muzzle blast all change readings.
Magnetic	Senses the bullet from a bayonet mounted on the barrel	Hangs extra weight off the barrel.

A barrel-mounted magnetic unit can shift your point of impact and change barrel harmonics and group size. The effect varies from rifle to rifle.[2] You can leave the unit on during a work-up, because a work-up checks velocity, not group size. Before you shoot groups with a barrel-mounted unit attached, test the rifle with the unit on and off in interleaved strings (see *The Precision Rifle Handbook*, "Testing any claim yourself").[3] Until you prove it does not change your groups, remove it for group shooting and chronograph separate strings. When you shoot groups and velocities in separate strings, you cannot pair each bullet hole with its velocity to check vertical spread against speed (see Chapter 31).

Evidence · Supported by data
In one test, optical units with screens less than 2 feet apart had average errors of 13 to 55 fps. An average error moves a drop chart and the charge at which you reach the velocity ceiling, not the SD. Two of those units added only about 4 fps of noise, and the other two added far more.[1] In another test, two Doppler units agreed within about 1 to 5 fps.[4]

Set up and check the unit at every session (see Chapter 28).

Rests, bags and targets

A steady rest holds the rifle still during work-ups and function tests, so the target shows the load rather than your hold. A solid rest on a shooting bench is best. Prone with sandbags is next. Away from a shooting bench, a bipod and a rear bag do the same job. Use targets printed at actual size with clear aim marks so you can spot hits and verify zero easily.

Spotting scopes and target cameras

A spotting scope or target camera lets you see each bullet hole from the firing line. Use it to verify safe impact on paper during a work-up and to match each hole with its chronograph reading in your log. If you call a bad shot, write down your call before you look at the target (see Chapter 27).

Thermometers and weather meters

Keep your ammunition in an insulated box with a thermometer in it, and read the ammunition temperature at every session (see Chapter 30). That reading tells you whether a velocity shift came from heat or from the load. A pocket weather meter reads the air temperature and station pressure where you stand, rather than the sea-level pressure in weather reports. Record both with the session for later reference.

Torque drivers, witness paint and scope levels

A torque driver sets each fastener on the rifle to the manufacturer's specification. A paint pen draws a thin witness line across each screw head onto its seat. A broken line shows at a glance that a screw has turned. Both keep the hardware baseline fixed (see Chapter 3). A scope level shows cant. Level the reticle to a plumb line when you mount the scope, then use the scope level for every shot.

For long-range optics, wind meters, ballistic solver inputs, and extended field gear, see *The Precision Rifle Handbook*.

Part III

Components

Every cartridge is built from four components: the brass case (Chapter 11), the primer (Chapter 12), the powder charge (Chapter 13) and the bullet (Chapter 14).

Chapter 11. Brass 53
Chapter 12. Primers 58
Chapter 13. Powders 62
Chapter 14. Bullets 70

Brass

Key points

- The inside of the case is the room the powder burns in. Less room for the same charge means more pressure.
- Cases of one cartridge hold different amounts of water from one maker to the next. About 2 gr of water is a real pressure difference near a maximum load.
- Your own fired cases, not the published test case, show how much room the powder has in your rifle.
- Brass comes in lots and wears out with each firing and sizing. A separating head, a split or a loose primer pocket ends a case's life.
- Case weight is only a loose stand-in for capacity. Where capacity matters, measure the water each case holds.

Why it matters

The case holds the primer, the powder and the bullet. It swells against the chamber wall as the round fires. That seals the gas behind the bullet.

The inside of the case is the space the powder burns in. Until the bullet moves, the gas has nowhere else to go. A smaller space gives a higher pressure from the same charge. Two cases that look the same from outside can give two different pressures.

Every maker builds its cases to the outside dimensions of the cartridge standard. The standard's drawings set no thickness for the walls or the web. That is the maker's choice.[1] Thicker walls or a thicker web leave less room for powder. Military brass is a common example of a thick case. Cases of one cartridge can differ by a couple of grains of water from maker to maker.[2]

Brass also wears out. Each firing stretches the case and each sizing works it back. In time the brass hardens and thins in places. A worn case can split. It can also pull apart just above the head and let high-pressure gas into the action. So you need to know three things about every case: its capacity, its firing count and its condition.

How it is done

Makers and capacity

Published load data names the case used in the test. Your cases may hold more or less water than that case. That is one reason every work-up starts at the published start load. Some published data also lists the water capacity of the test case.[3] Compare your own measurement with it when you can.

A change of maker is a change of component. Treat it like a change of powder or bullet. Drop to the published start load and work up again (see Chapter 28).

Some cartridges are sold with a small rifle primer pocket by one maker and a large rifle primer pocket by another. Check the pocket of your actual case before you buy primers

(see Chapter 12). Range brass of mixed makers needs sorting by headstamp before anything else (see Chapter 18).

Brass lots

A lot is a batch of cases made under one set of conditions and marked with one number. When raw material or tooling changes, the maker starts a new lot. If a batch fails a test, the lot number shows which cases to set aside.

Many makers print a lot number on the box. Copy it onto your own label.

Keep lots apart. Do not mix makers, lots or firing counts in one test. A mixed batch adds a variable you cannot see on the target.

Buy enough cases of one lot for the work ahead. A new lot from the same maker usually holds nearly the same capacity. In published comparisons, lots from one maker differed in water capacity by about 1 percent or less.[4] Measure a few cases and compare them with your records. Act on a measured difference rather than an assumed one. Record the new lot. Before you load it in bulk, load 10 check rounds at your current charge, or one step lower if it sits at or near the published maximum. If the new lot runs faster by more than twice the noise (see Chapter 30), lower the charge and work up again from below.

Label each box with the maker, the lot, the firing count and the rifle.

Measuring water capacity

Water capacity is the weight of water that fills a case to the mouth. It is given in grains of water (gr H_2O). Water is used because its density is well known.

Measure cases fired in your rifle before you size them. A fired, unsized case matches your chamber and shows the true room the powder has in your rifle. If your brass is new, measure its capacity after its first firing. Your first work-up starts at the published start load either way, so you do not need to wait on this measurement to begin (see Chapter 28).

You need these items.

- A scale that reads to 0.1 gr or finer (see Chapter 8).
- A check weight close to the weight of a full case.
- Five to ten cases fired in your rifle from one lot with their spent primers still in place.
- A small cup of distilled water at room temperature, with a drop of dish soap if you like.
- A syringe or a dropper.
- Paper towels and a fine marker.

1. **Choose the cases.** Take five to ten cases from one maker, one lot and one firing count. Do not size them. Do not remove the spent primers. A spent primer seals the flash hole.
2. **Clean and dry them.** Wipe the outside of each case. Tip out any loose powder residue. The inside must be dry for the empty weighing.
3. **Check the scale.** Verify it with the check weight before you weigh anything. Fix it before you go on if the reading is off (see Chapter 23).

4. **Number and weigh each empty case.** Write a number on each case body with a marker. Weigh each case. Record its weight to the last digit the scale shows.
5. **Fill the case.** Fill it from the syringe up to the mouth (see Figure 11-1). Tap the case gently to free any air bubbles. A drop of dish soap in the cup of water lowers the surface tension. It helps the water lie flat at the mouth.

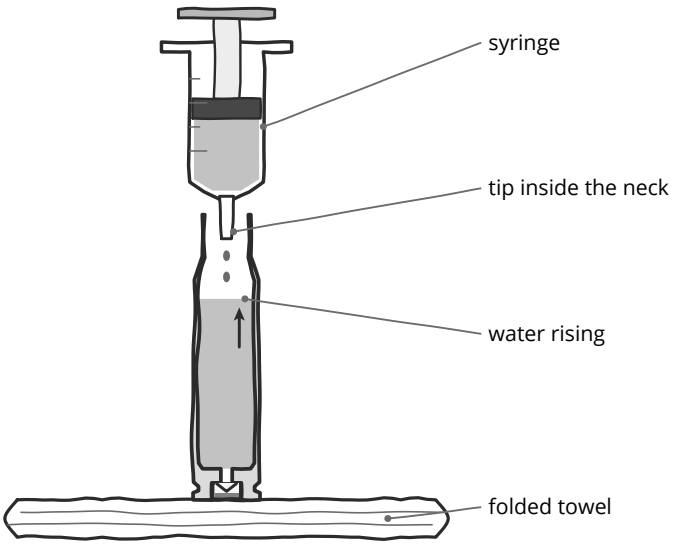

Figure 11-1. Filling a fired case with water from a syringe.

6. **Level the water at the mouth.** Let a small dome of water stand above the mouth. Touch the corner of a paper towel to the dome. Draw water off until the surface sits level with the mouth (see Figure 11-2). Choose one rule for level and use it on every case.

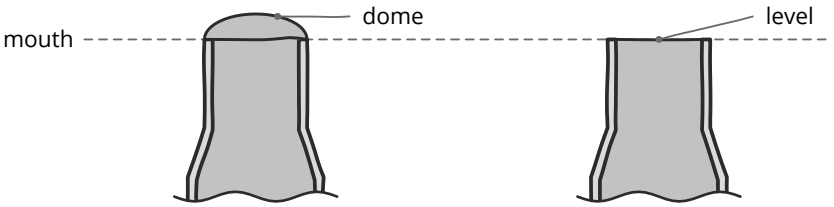

Figure 11-2. Overfilled and level. The left case has a dome of water above the mouth. The right case is filled level with the mouth.

7. **Dry the outside and weigh the full case.** Wipe any water from the outside and the head. Weigh the full case at once and record its weight (see Figure 11-3). Water evaporates from the open mouth while you wait.
8. **Subtract and record.** The capacity of each case is its full weight less its empty weight. Work out the mean and the spread for the lot with the formulas below.
9. **Empty and dry the cases.** Pour out the water. Dry the cases fully before you size or prime them.

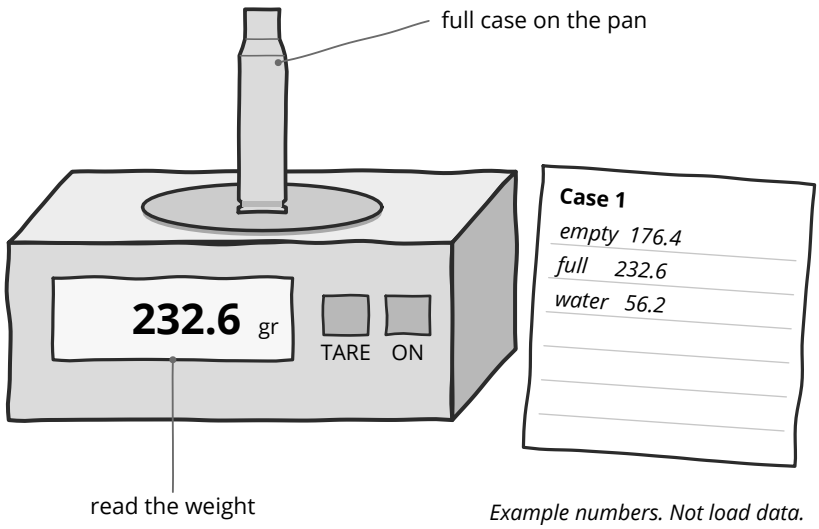

Figure 11-3. Weighing the full case.

```
Capacity (gr H₂O) = full weight (gr) − empty weight (gr)
Mean capacity     = (c1 + c2 + ... + cn) ÷ n
Spread            = largest capacity − smallest capacity
Difference (%)    = (mean A − mean B) ÷ mean A × 100
```

Worked example. Five fired cases from one lot. Example numbers. Not load data.

Case	Empty (gr)	Full (gr)	Capacity (gr H_2O)
1	176.4	232.6	56.2
2	175.9	232.0	56.1
3	177.1	233.5	56.4
4	176.0	232.3	56.3
5	176.6	232.6	56.0

The five capacities add up to 281.0 gr. The mean is 281.0 ÷ 5 = 56.2 gr H_2O. The spread is 56.4 less 56.0, or 0.4 gr H_2O.

Now measure five cases from a second maker the same way. Say their mean is 54.4 gr H_2O. The second maker's cases hold 1.8 gr less water. The difference is 1.8 ÷ 56.2 × 100 = 3.2 percent of the room. That is close to the 2 gr of water that makes a real pressure difference near a maximum load.[2]

EASIER ON EP · COMPONENTS · BRASS

Enter each maker's mean capacity in Components, and Ignition models your loads with the room your own cases hold.

empiricalprecision.com/components?tab=brass

Contested: sorting cases by weight evens out their capacity

The claim. Many handloaders weigh their cases and sort them into groups by weight. Cases of equal weight hold equal water. Sorting by weight should therefore lower the velocity spread.

The physics. Weight counts all the brass in a case. Some of that brass sits in the rim and the solid head. Brass there adds weight but takes no room from the powder. Only the brass in the walls and the web changes capacity. So weight can only be a loose stand-in for capacity.

The test. Take fired cases from one lot with their spent primers in place. Weigh each empty case and sort the cases by weight into a light group and a heavy group. Then fill and weigh each case to find its water capacity (see "Measuring water capacity" above). This tests the claim directly, without firing a round. Firing the cases to judge their capacity from velocity wastes components and measures capacity poorly.

Compare the water capacities of the two groups. If case weight tracks capacity, the heavy group will hold less water than the light group by more than the spread within each group.

The data. Controlled tests of weight sorting are few. A small shooting test cannot settle the question. Heavy case prep on brass from one lot has shown no group benefit.[5]

The verdict. Plausible but unproven. Sorting by weight may still group cases of similar capacity. Where capacity matters, measure it directly.

Case life and inspection

A case has no fixed lifespan. Count its firings and inspect every case before loading (see Chapter 18). Too much shoulder bump stretches and thins the brass above the web, and in time the head separates. Bump the shoulder only .001 to .002 inch for a bolt action, or .003 to .005 inch for a semi-automatic (see Chapters 19 and 26). Annealing softens worked brass and extends neck life (see Chapter 21). Retire any case with a bright stretch ring above the head, an inside groove that a probe catches, a split neck or shoulder, a crack or a loose primer pocket. Crush its neck so it cannot return to the batch.

Chapter 12

Primers

Key points

- Rifle primers come in two sizes, large and small. The pocket in the case decides which one fits.
- There are four common types: standard, magnum, match and military-specification. Use the type the published data names.
- A high primer can misfire, or fire as a semi-automatic's bolt closes. A pocket that takes a primer too easily belongs to a worn case.
- A different primer makes a different load. In percentage terms, pressure can move 10 times as much as velocity, so the chronograph may not warn you.

Why it matters

The primer starts the fire. The firing pin dents the cup and crushes a small pellet of priming compound against the anvil. The compound flashes. The flash passes through the flash hole and lights the powder.

The strength and duration of that flash matter. A hotter flash lights more powder at once, so pressure builds sooner and peaks higher. Because velocity comes from the total push down the barrel rather than the peak alone, a primer change can raise peak pressure sharply while velocity barely moves.

Velocity is your best pressure gauge at home, but after a primer swap it can understate the change. Pressure signs on the case are poor warnings too (see Chapter 28).

How it is done

Sizes

Rifle primers come in two diameters, large and small. The primer pocket in the case head decides which one you use. The two sizes are not interchangeable.

Most cartridges use one size. A few are made with small primer pockets by one maker and large primer pockets by another. Look at your actual cases before you buy primers.

Pistol primers come in the same two diameters. Do not use them in rifle cases. Pistol and rifle primers are not safely interchangeable.[1] A large pistol primer, for example, is shorter than a large rifle primer and fits a shallower pocket.[2]

Types

Type	Use it for	What differs
Standard	Most rifle loads	The baseline
Magnum	Loads whose data names a magnum primer	A stronger or longer flash
Match	Precision loads	Sold as more uniform
Military-specification	Rifles with a floating firing pin	Less sensitive to a light strike

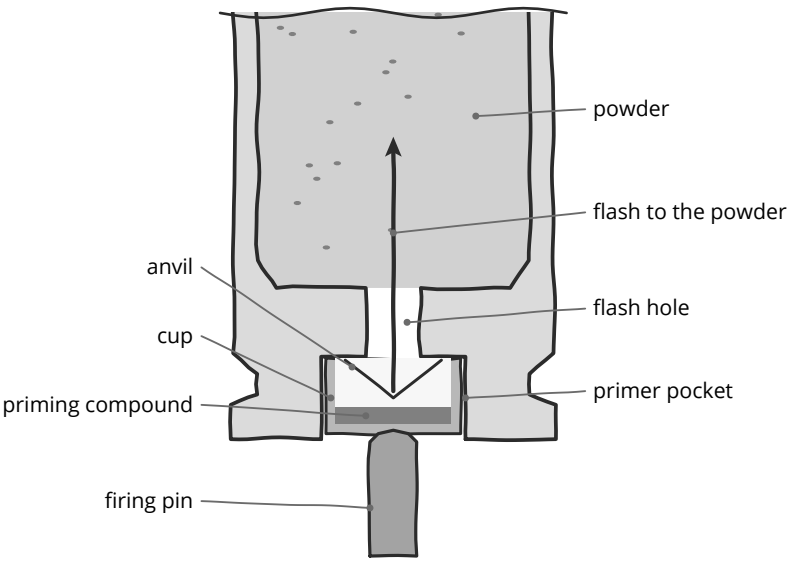

Figure 12-1. A primer seated in its pocket. The firing pin crushes the compound between the cup and the anvil, and the flash passes through the flash hole to the powder.

Standard rifle primers suit most rifle loads.

Magnum primers give a stronger or longer flash. Published data sometimes names one for large charges or for ball powders. Ball powders light less readily than stick powders in a case that is not full.[3] Use a magnum primer when the published data for your load names one. Do not switch to one on a hunch.

Match primers are sold as more uniform from one primer to the next. Whether a given match primer lowers the velocity spread in your rifle is a question for a test (see *The Precision Rifle Handbook*).

Evidence · Plausible but unproven

Published live-fire tests have compared standard and match primers.[4] In one test of five small rifle primers (20 shots each in the same load), velocity SDs ran from 8 to 12 fps. The match primer tied its maker's standard primer, and the benchrest primer gave the highest SD.[5] Still, 20 shots per primer cannot reliably separate SDs of 8 and 12 fps. That takes about 50 shots each (see *The Precision Rifle Handbook*).

Military-specification primers are made less sensitive. Some semi-automatic rifles have a floating firing pin. When the bolt slams home, the pin can tap the primer. A sensitive primer can fire from that tap. This is called a slam fire. Military-specification primers have thicker, harder cups than standard commercial primers, so the tap is less likely to fire them.[6] They lower the risk of a slam fire but do not remove it (see Chapter 26).[7]

Pocket fit

A primer should need firm, even pressure to seat. Seated fully, it bottoms in the pocket and sits about .003 to .005 inch below the case head (see Chapter 22).

A high primer stands proud of the head. It can misfire because part of the firing pin's blow is spent seating it the rest of the way.[8] In a semi-automatic rifle it can fire as the bolt closes.[9]

A primer that slides in with little effort means a loose pocket, stretched by pressure or many firings. A loose primer can leak gas or back out of the pocket. Retire the case (see Chapter 11).

A pocket that fights the primer needs attention, not force. Never force a primer. Military brass often has a crimped pocket, and the crimp must come out before a new primer will seat (see Chapters 7 and 22). Some handloaders also uniform pockets or deburr flash holes, though the evidence for both is thin (see Chapter 22).

Storage and handling

Keep primers in the maker's packaging until you load them. Keep one primer type on the workbench at a time, just as with powder. Store primers cool and dry. Never store them loose or in a bulk container, where one primer that goes off can set off the rest (see Chapter 2).[10] Primers are made in lots like every other component. Write the lot number on your batch record (see Chapter 27). Before you load a new lot in bulk, load 10 check rounds at your current charge, or one step lower if it sits at or near the published maximum. If the new lot runs faster by more than twice the noise (see Chapter 30), lower the charge and work up again from below.

Why a primer change requires a new work-up

Published data names the primer used in the test (see Chapter 15). That primer is part of the load. A different primer makes a different load, even at the same charge.

Count any of these as a primer change:

- A different maker.
- A different type from the same maker, such as standard to magnum.
- A different model of the same type.

A rule of thumb puts numbers on the risk. In percentage terms, pressure moves about 3 times as much as velocity for a change of charge, and 10 times or more for a primer swap (see Chapter 28).[11]

```
Velocity change (%)          = (V new − V old) ÷ V old × 100
Possible pressure change (%) ≈ 10 × velocity change (%)
```

Worked example. Example numbers. Not load data. A load averages 2,750 fps with its old primer. At the same charge, the new primer averages 2,778 fps.

```
Velocity change         = (2,778 − 2,750) ÷ 2,750 × 100 = 1.0%
Pressure change, primer ≈ 10 × 1.0%                     = about 10%
```

A 1 percent rise in velocity looks harmless. Read with the primer ratio, it may mean about 10 percent more pressure. Suppose the old load ran at 95 percent of the maximum pressure. A 10 percent rise takes it to about 105 percent. That is over the limit, and nothing at the chronograph looked alarming.

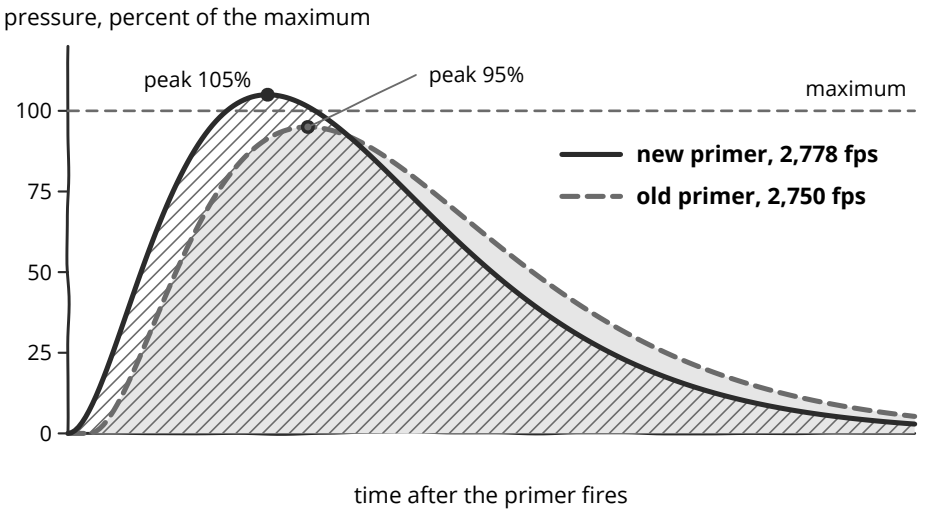

Illustration only. Example numbers. Not load data.

Figure 12-2. Two pressure curves from the same charge with two different primers. The velocities are almost the same. The peaks are not.

Safety · See Chapter 2
In percentage terms, a primer swap can move pressure 10 or more times as much as velocity, so a small velocity difference can hide a dangerous pressure rise.[11] Drop back to the published start load and work up again after any primer change.

Record the new primer and its lot on your batch record (see Chapter 27).

Chapter 13

Powders

Key points

- Smokeless powder is nitrocellulose. Double-base powders add nitroglycerin, but the type alone does not tell you which powder holds more energy.
- Burn rate is a relative ranking, not a number, and powders adjacent on a burn chart are never interchangeable.
- Warm powder generates more pressure. “Temperature stable” depends on the cartridge, the lot and the rifle.
- Store powder sealed, cool and dry. In one test, damp storage moved velocity more than heat or cold usually does.
- A powder that fills the case at its published maximum is the forgiving choice for a first load. A double charge cannot hide in it.

Why it matters

Powder is the energy in the cartridge. It is also the component that is easiest to get wrong. Two powders at the same charge weight can differ by 20,000 psi.[1] A charge that is safe with one powder can be dangerous with its neighbor on a burn chart.

So the rules for powder are strict. Keep one powder on the workbench at a time. Use published data for the exact powder. Record the lot, and check a new lot before you rely on it.

Powder also responds to its surroundings. Warm powder burns faster when fired. Moisture changes it in storage. Age slowly uses up the chemicals that keep it stable.

How it is done

Single base and double base

All smokeless rifle powder starts as nitrocellulose. Single-base powders are nitrocellulose with stabilizers and other additives. Double-base powders add nitroglycerin. The share varies widely. One maker’s powders run from 2 percent in a shotgun powder to 40 percent in a pistol powder.[2]

The nitroglycerin raises the energy per grain.[3] In one maker’s data, its single-base rifle powders have an energy content of about 3,500 to 3,950 kJ/kg. Its double-base rifle powders have about 3,700 to 4,000 kJ/kg.[4] The ranges overlap, so the type alone does not tell you which powder holds more energy. More energy per grain can mean more velocity from a given case. The hotter gas can also wear the throat faster.

Grain shapes

Rifle powders come in three common shapes.

- **Extruded or stick powder.** Short cylinders cut from a pressed strand. Most have one hole through the middle. Some have several.

- **Ball or spherical powder.** Small spheres. Many are rolled flatter and coated to slow the start of the burn.[5]
- **Flake powder.** Thin discs. Flake is more common in pistol and shotgun powders than in rifle powders.

The shape decides how the burning surface changes as the grain burns. A solid sphere or flake shrinks as it burns, so its surface falls. That is a degressive shape. A stick with one hole burns from the inside and the outside at once, so its surface stays close to constant. That is a neutral shape. A stick with several holes gains surface as the holes widen, until the grain breaks into slivers. That is a progressive shape. Progressive shapes hold pressure up longer. Degressive shapes peak early.

Shape also changes how powder pours. Ball powder flows easily through a measure and packs densely, at about 950 to 1,000 kg/m³. Stick powder mostly pours a little lighter, at about 880 to 990 kg/m³. It also meters less evenly.[6] Weigh every charge for a work-up or a precision load, whatever the shape (see Chapters 8 and 23).

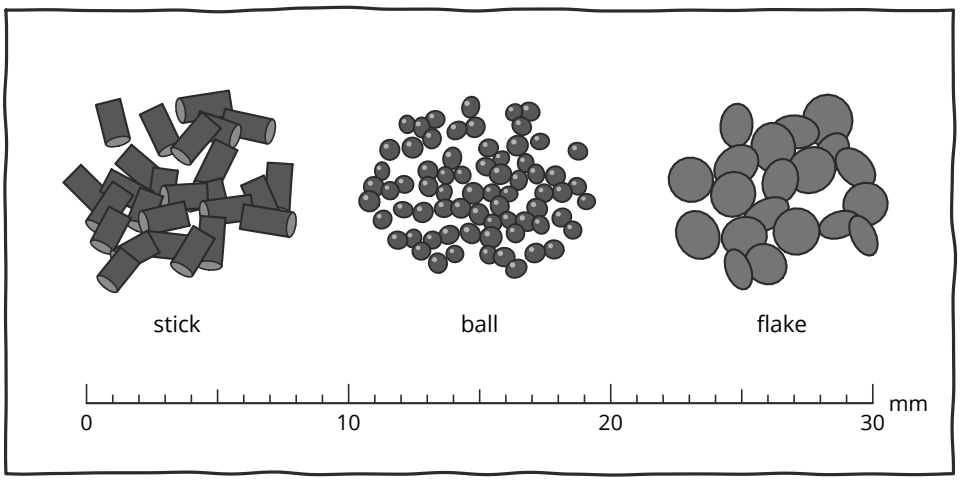

Figure 13-1. Stick, ball and flake powder under magnification.

Burn rate as a relative idea

"Burn rate" is not a number printed on the container. It is a place in an order from fast to slow. Powder makers publish burn rate charts that rank powders from fastest to slowest.

The order is only relative because powder burns faster as pressure rises. This is Vieille's law.

```
r = B × Pⁿ

r = speed at which the burning surface moves into the grain
B = the powder's burn coefficient
P = pressure
n = burn exponent
```

Because burn speed depends on pressure, and pressure depends on the case, bullet and charge, two powders can swap places on a burn chart from one cartridge to another.

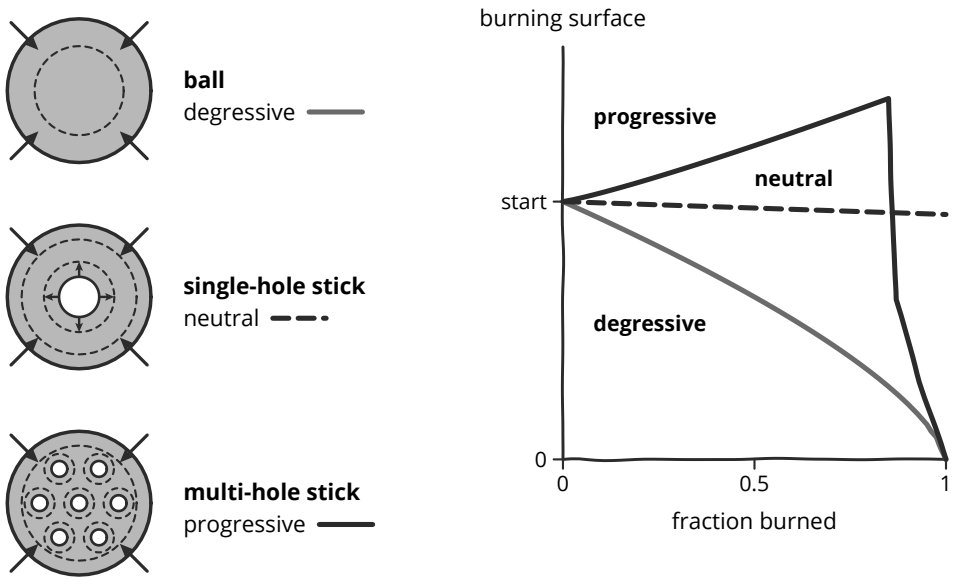

Figure 13-2. How grain shape changes the burning surface. A ball shrinks, a single-hole stick stays nearly constant and a multi-hole stick grows.

Use a burn chart to narrow your search. Never use it to set a charge (see Chapter 16).

1. **Start from published data for your cartridge and bullet** (see Chapter 15). Note the powders it lists.
2. **Find those powders on a burn chart.** Note where they cluster.
3. **Pick candidates from that region.** These are the powders worth reading about.
4. **Find published data for each candidate.** It must cover your exact cartridge and bullet. A powder with no published data for your components is not a candidate.
5. **Take every charge from that data.** Start at its start load.

Never substitute one powder for another because they sit close together on a chart. A powder one place faster can be dangerously over pressure at the slower powder's charge. Two powders can also share a number in their names and still be different powders. Read the full name on the container every time.

A burn chart is a guide, not load data. Burn order shifts with cartridge, bullet, pressure, temperature and lot. Where two charts disagree, trust the powder maker's. A chart tells you which manual pages to open. It does not give you a charge. Every powder still needs its own published start load.

EASIER ON EP · LOAD LIBRARY · MY LOADS

The Burn Chart ranks the library's rifle powders from fastest to slowest, and can show the order for one cartridge. Use it to see where a powder sits, never to swap one powder for another.

empiricalprecision.com/loads?tab=burn-chart

Case fill and compressed loads

Case fill is how much of the case the powder takes up. It is the charge's poured volume as a share of the usable capacity. Usable capacity is the case capacity (see Chapter 11) less the room the seated bullet takes. You can estimate that room by hand. Treat the part of the bullet below the case mouth as a solid cylinder of the bullet's diameter.

```
Seated depth (inch)
    = bullet length − (COAL − case length)
Bullet's seated volume (gr H₂O)
    ≈ seated depth × 0.7854 × bullet diameter² × 252.4
Usable capacity (gr H₂O)
    = case capacity − bullet's seated volume
Charge volume (gr H₂O)
    = charge (gr) × 998.2 ÷ bulk density (kg/m³)
Case fill (%)
    = charge volume ÷ usable capacity × 100
```

The figure 998.2 kg/m³ is the density of water at about 20 °C. At that density, one cubic inch of water weighs 252.4 gr. The figure 0.7854 is π ÷ 4, so 0.7854 × diameter² is the area of the bullet's cross-section in square inches. A boat tail takes a little less room than a cylinder, so the estimate runs a little high. Bulk density is the density of the powder as poured, air gaps included. To measure it, use the fired case you measured for water capacity. Pour powder in through a funnel until it is level with the mouth. Do not tap the case. Weigh the powder. Then bulk density (kg/m³) ≈ powder weight (gr) ÷ water capacity (gr H_2O) × 998.2.

Worked example. An imaginary case, bullet and powder. Example numbers. Not load data. The case holds 58.0 gr H_2O. A .308 inch bullet 1.165 inch long is seated in a case 2.050 inch long, to a COAL of 2.850 inch. The powder pours at 930 kg/m³.

```
Seated depth
    = 1.165 − (2.850 − 2.050) = .365 inch

Bullet's seated volume
    ≈ .365 × 0.7854 × .308² × 252.4 = 6.9 gr H₂O

Usable capacity
    = 58.0 − 6.9 = 51.1 gr H₂O

Weight that fills the usable capacity (100% fill)
    = 51.1 × 930 ÷ 998.2 = 47.6 gr

A charge of 90% of that weight
    = a case fill of 90%
```

Published data often shows fill. Some manuals print the load density or fill ratio beside each charge and flag compressed loads.[7] Follow those flags.

Published loads show where case fill normally sits.[1]

Case fill	What it means
Below 60%	Very low. Published loads rarely go here
60 to 70%	Low fill. The powder may light less consistently
70 to 80%	The low side of published loads. One rifle start load in four sits here
80 to 100%	The normal range

Case fill	What it means
100 to 105%	Lightly compressed. One published load in six sits here
105 to 110%	Compressed. Common at maximum charges
Above 110%	Heavily compressed. Published loads rarely go here

A compressed load is one over 100 percent load density. In testing, compressed loads still ignite consistently.[8] Seating a bullet on a compressed charge crushes the powder. Compressed powder can push the bullet out over time.[1] Measure compressed rounds again before you fire them.

Low fill is not a reason to add powder. Never go past the published maximum to fill a case. If fill is low, the cure is a slower powder with its own published data.

Within the normal 80 to 100 percent range, a fuller case does not guarantee a lower velocity SD. In a test across five cartridges from .223 Remington to .338 Lapua Magnum, powders at 80, 90 and 100 percent fill showed no link between fill and SD. Both the lowest and the highest SDs came from 80 percent loads.[9]

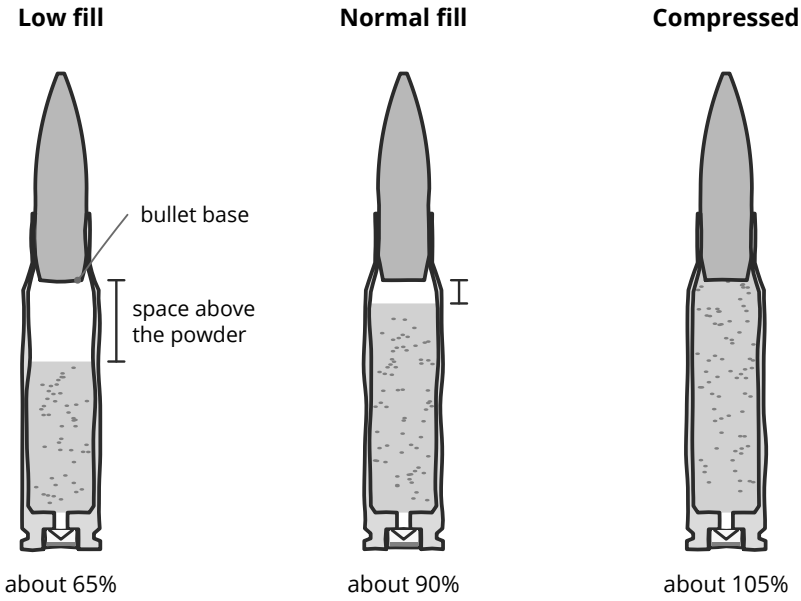

Figure 13-3. Three cases cut away to show low fill, normal fill and a compressed charge under the seated bullet.

EASIER ON EP · IGNITION · INTERNAL BALLISTICS

Ignition works out the usable capacity and the case fill for any charge you model.

empiricalprecision.com/heurisko?tab=ignition

Full-case loads: the forgiving first load

Some powder and cartridge pairs are hard to overcharge. The powder is bulky enough that its published maximum charge fills the case, or nearly fills it. A double charge cannot fit. It

spills over the case mouth before a bullet can be seated. A gross overcharge cannot fit either. A full-case load turns the two worst charging mistakes into something you can see.

The classic example is a bulky extruded powder in the .223 Remington with a light bullet. Its published maximum charges fill the case or compress it slightly.[10] Many cartridges have a powder like this. The published data shows which.

Low fill works the other way. A fast, dense powder can reach the pressure limit with the case half full.

> **Safety · See Chapter 2**
> Take extreme care with any load that fills less than half the case, because it leaves room for a double charge. Look into every charged case before you seat a bullet.[11]

Finding a full-case load:

1. Start with the powders listed in published data for your exact bullet and cartridge.
2. Look for maximum charges marked compressed or case full. Compressed is often marked with a “C” and case full with an “F”. Those powders fill the case at their maximum.[12]
3. If the data does not mark fill, work it out with the case-fill formula above. Use your own fired brass, since brass from different makers holds different amounts of powder. If your brass is new, measure it after its first firing. Until then, use the test case’s capacity where the data lists one (see Chapter 11).
4. Prefer the powder whose published maximum most nearly fills the case for the velocity you want.[8]
5. Work up from the published start load as always (see Chapter 28). A full case at the maximum is a safeguard. It is not a reason to skip the work-up.

What a full-case load does not prevent:

- **The wrong powder.** A faster powder poured to the same level can be far over pressure while the case looks normal. Keep only one powder out in the workshop at a time (see Chapter 2).
- **A bullet seated too deep.** Deeper seating raises pressure with no change in charge (see Chapter 24).
- **A changed component or hot weather.** A primer swap, brass that holds less or a hot chamber can raise pressure at the same charge (see Chapter 12 and the next section).
- **Compressing past the published maximum.** Never add powder just to fill a case.

> **EASIER ON EP · IGNITION · INTERNAL BALLISTICS**
> Model each candidate powder at its published maximum in Ignition and compare the case fills. A powder near 100 percent is the forgiving choice.
> **empiricalprecision.com/heurisko?tab=ignition**

Temperature sensitivity

Warm powder burns faster. Faster burning raises pressure and velocity. Cold powder does the reverse. The same charge that is comfortable at 40 °F can be over pressure at 100 °F.[1]

Published data is shot at one set temperature, such as 68 °F.[13] Your ammunition will see colder and hotter days than that.

Some powders are sold as temperature stable. The term has no fixed meaning. How a powder responds depends on the cartridge, the lot and the rifle. The response is often not a straight line, and many powders change faster in the cold than in the heat. As a rough guide, concern starts near 0.5 fps per °F.[14]

Heat in the chamber matters too. A round left in a hot chamber warms up before you fire it. The chamber can warm it as much as a hot day does. Do not let a round sit in a hot chamber while you wait to shoot.

> **Evidence · Supported by data**
> Two popular powders sold as temperature stable measured 0.136 and 0.140 fps per °F across about 100 °F. For one of them, the slope in the cold was about twice the slope in the heat.[14] In a 2016 test from 25 to 140 °F, three such powders changed by 25, 46 and 68 fps.[15] "Temperature stable" is a range of results, not a promise.

Always leave a margin for heat. A near-maximum load developed in cool weather can produce dangerous pressures in summer heat. Lower your velocity ceiling by 1 fps for every °F between your work-up ammo temperature and the hottest weather you will shoot in, even with a "temperature-stable" powder (see Chapter 28).

Lot-to-lot variation

Powder is made in lots, and burn rate can vary slightly between lots. Record the lot number from every container on your batch record (see Chapter 27). Buy enough of one lot for the life of a load. Before you load a new lot in bulk, load 10 check rounds at your current charge, or one step lower if it sits at or near the published maximum. If the new lot runs faster by more than twice the noise (see Chapter 30), lower the charge and work up again from below.

Storage, shelf life and signs of breakdown

Smokeless powder breaks down slowly from the day it is made. As nitrocellulose ages, it gives off acidic nitrogen oxides. Stabilizers such as diphenylamine and ethyl centralite absorb them. Heat speeds the breakdown. Cool storage slows it.

Store powder in its original container with the lid closed tight. Keep it dry and away from heat, friction and electrical discharge. Aim to keep it below 70 °F (21 °C) and never above 100 °F (38 °C).[16] Stored this way, powder keeps for many years.[17] Sealed in the original container at about 68 °F (20 °C), one maker's powders have an estimated shelf life of at least 10 years.[18] Use the oldest container first. Return unused powder from the measure to its own container at the end of every session (see Chapter 2).

Check old powder before you use it. These are the signs of breakdown.

- **A sharp, acrid smell.** Decaying powder smells of acid. Fresh powder smells of solvent.
- **Reddish-brown dust or fumes** on the grains or in the container.
- **Discolored grains.**

Once the stabilizers are used up, the breakdown speeds itself up. In the worst case it can end in spontaneous combustion. Stop using any powder that shows these signs. Dispose of it (see Chapter 2).

Humidity in storage

Powder takes up or gives off moisture until it matches the air around it. That moisture changes how it burns, and the effect can be large.

Evidence · Supported by data

In one controlled test, the same powder was stored at 10 percent and at 80 percent relative humidity. The dry sample gave 2,823 fps. The damp sample gave 2,628 fps.[19] That 195 fps gap is far larger than the temperature effects above, but it comes from a single test.

Keep powder sealed in its original container so its moisture stays where the maker left it. Do not leave powder in an open measure or hopper for days. Store loaded rounds with the same care. A brass case is not sealed against the air unless you seal it. Ammunition kept for months in a damp garage or basement can give erratic velocities, hang-fires or duds.

Chapter 14

Bullets

Key points

- Construction decides how a bullet behaves in the bore and in the target.
- Monolithic bullets are longer for their weight. They need their own published data and more jump.
- The ogive decides how fussy a bullet is about seating depth. Tangent ogives are the most forgiving.
- Length decides the twist a bullet needs, so measure your own bullets.
- A new bullet is a new load, even at the same weight. Work up again after any bullet change.

Why it matters

The bullet touches every part of the load. Its weight and bearing surface set how hard the powder must push. Its length sets how deep it sits in the case and whether your twist can keep it flying point first. Its shape sets its drag, which governs drop and wind drift.

Each of these feeds pressure. A heavier bullet raises pressure for the same charge. More bearing surface adds friction in the bore and nudges pressure up. A longer bullet seated to the same overall length sits deeper and takes room from the powder (see Chapter 24).

How it is done

Construction types

- **Cup and core.** A lead core inside a jacket of copper alloy. Most match bullets and many hunting bullets are built this way. Match bullets usually have a small open tip and a boat tail.
- **Bonded.** A cup-and-core bullet with the core fused to the jacket. Bonding is meant to keep the two together on impact, so a hunting bullet holds its weight.
- **Monolithic.** One piece of copper or copper alloy, with no lead. Copper is less dense than lead, so a monolithic bullet is longer than a lead-core bullet of the same weight. Many have grooves cut around the shank to reduce bearing surface, fouling and pressure.[1]
- **Tipped.** A tip fills the nose of any of the types above. A polymer tip adds length but almost no weight. An aluminum tip adds some weight.

Choose the construction for the job first. Match bullets are built for precision and a high ballistic coefficient, or BC. A BC compares a bullet's drag with that of a standard projectile. A higher BC means less velocity loss and less wind drift (see *The Precision Rifle Handbook*). Hunting bullets are built to expand and hold together in game.

The parts of a bullet

From the front, a bullet has a meplat, an ogive, a bearing surface and a base. The meplat is the small flat or opening at the very tip. The ogive is the curved nose. The bearing surface is the full-diameter shank that grips the rifling. The base is either flat or tapered into a boat tail.

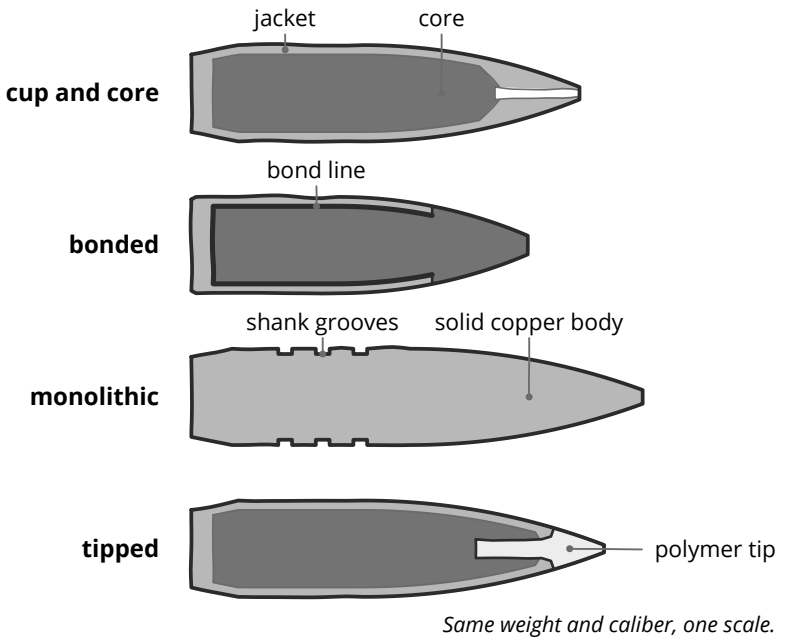

Figure 14-1. Four constructions cut in half: cup and core, bonded, monolithic and tipped.

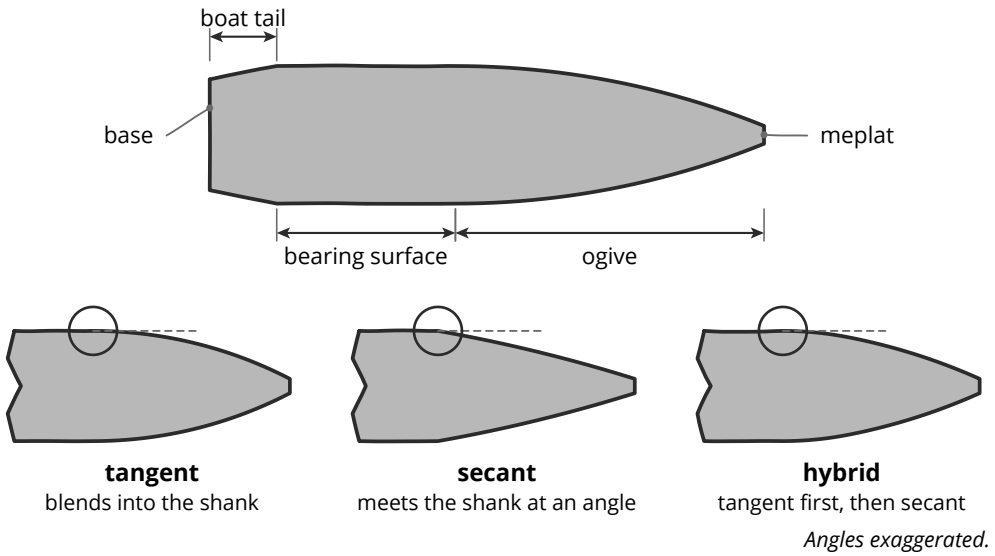

Figure 14-2. The parts of a bullet, with the three ogive types compared.

Ogive types

- **Tangent.** The nose curve blends smoothly into the shank. There is no corner where they join. Tangent ogives are the most forgiving of seating depth.
- **Secant.** The nose curve meets the shank at a slight angle. It uses a larger radius than a tangent ogive of the same nose length. That gives a sleeker nose and often a higher BC. Secant bullets can be fussy about seating depth.
- **Hybrid.** A tangent section where the bullet meets the lands and a secant section toward the tip. Hybrids aim for the BC of a secant nose with the seating tolerance of a tangent nose.

Ogive type changes how much seating depth matters (see Chapter 24).

Boat tail and flat base

A boat tail tapers the base to reduce drag. Long-range match bullets usually have one. A flat base is shorter for its weight. It is also harder to start square in the case mouth, so it may need a slight flare (see Chapter 20). The base shape also decides which drag model, G1 or G7, fits the bullet (see *The Precision Rifle Handbook*).

Bearing surface

More bearing surface means more friction and more force to engrave the bullet. Both nudge pressure up.

Bearing surface is not always published. In measured bullets it is typically about a third of the bullet's length.[2]

Length and stability

Length is what makes a bullet hard to stabilize, so a longer bullet needs a faster twist (see *The Precision Rifle Handbook*).

Measure your bullets with calipers. Catalog lengths are often nominal.[2] Measure a few from each box and use the longest. For a tipped bullet, also measure the metal length, from the base to where the jacket ends. The stability check uses it (see *The Precision Rifle Handbook*).

Spin ceiling and jacket failure

Spin stabilizes a bullet, but spin has a ceiling too. Pushing a light or thin-jacketed bullet to high velocity in a fast-twist barrel creates high centrifugal stress on the jacket. Past that limit, the bullet can come apart in mid-air as a gray puff of smoke instead of reaching the target. From about 250,000 rpm, thin-jacketed bullets have been known to fail.[2]

Check the spin rate from muzzle velocity (MV, in fps) and barrel twist (in inches per turn):

```
RPM = MV * 720 / twist
```

Example numbers. Not load data. A bullet fired at 3,000 fps from a 1:8 twist barrel spins at `3,000 * 720 / 8 = 270,000 rpm`. That exceeds the 250,000 rpm caution, so a thin-jacketed bullet could fail in flight.

> **Safety · See Chapter 2**
> Check bullet spin rate before loading light or thin-jacketed bullets in a fast-twist barrel. High spin rates above about 250,000 rpm can cause mid-air jacket failure, especially in rough or hot bores.[2] Choose a thicker-jacketed or monolithic bullet, or lower the velocity, if your load approaches that ceiling.

For full gyroscopic stability calculations, twist matching, and external flight physics, see *The Precision Rifle Handbook*.

Monolithic bullets

A monolithic bullet's extra length sits deeper in the case. It also carries more bearing surface, which adds friction. Both raise pressure. So never use lead-core data for a monolithic bullet.

Monolithic bullets also need jump. One maker starts its copper bullets at least .050 inch off the lands.[3] Seat them with the jump the bullet maker gives (see Chapter 24).

> **Safety · See Chapter 2**
> Monolithic bullets are longer than lead-core bullets of the same weight (see Figure 14-3), and bullets from different makers produce different pressures. Use published data and the recommended jump for your exact bullet (see Chapter 24).[4] Work up again from the start load before seating deeper than your tested length. Jamming raises pressure with any bullet.

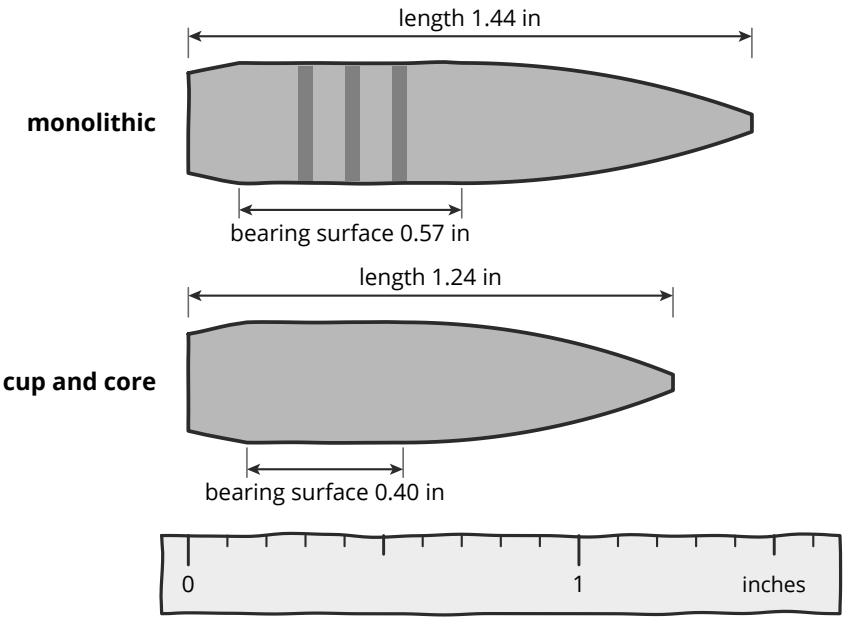

Figure 14-3. A monolithic bullet beside a cup-and-core bullet of the same weight and caliber.

Follow these steps for a monolithic bullet.

1. **Find published data for the exact bullet.** The bullet maker's data is the place to start.
2. **Measure the bullet.** Check its stability for your twist (see *The Precision Rifle Handbook*).
3. **Measure the lands with your usual method,** and seat with the jump the bullet maker gives (see Chapter 24).
4. **Start at the published start load.** Work up with a chronograph (see Chapter 28).
5. **Test jump** once the charge is set (see Chapter 24). Increasing jump seats the bullet deeper into the case. If you seat deeper than the length you used for your work-up, drop back to the start load and work up again (see Chapter 28). Fire enough shots at each depth to tell a real change from noise (see *The Precision Rifle Handbook*).
6. **Record the jump with the load.** Measure the lands again as the throat wears.

Bullet pointing and base-to-ogive sorting

Open-tip match bullets come out of forming dies with slight differences at the meplat, the small opening at the nose. Meplat trimming squares the tips to one length, and a pointing die closes the opening slightly to make the noses more uniform and reduce aerodynamic drag a little. Base-to-ogive (BTO) sorting measures bullets from the same box with a bullet comparator (see Chapter 9) and groups them into narrow length bands so seating depth (CBTO) varies less across a batch.

Evidence · Plausible but unproven
Trimming and pointing open-tip match bullets is supported by data only for a slight gain in ballistic coefficient and BC uniformity, which shows up mainly as a small drop in vertical spread at 1,000 yards and beyond. At shorter distances, and for base-to-ogive sorting of quality match bullets, controlled large-sample tests have not shown a clear group-size benefit. Both steps add workshop time, so test them with adequate samples before making them routine (see *The Precision Rifle Handbook*, Chapter 16).

Choosing a bullet step by step

1. **Decide the job.** Pick the construction for target, match or hunting use (see Chapter 16). For a hunting bullet, note the maker's lowest impact velocity for reliable expansion. The velocity column of your drop chart gives the farthest distance at which the load still reaches it (see *The Precision Rifle Handbook*).
2. **Check stability.** Measure the bullet and check its stability for your twist in your coldest air (see *The Precision Rifle Handbook*).
3. **Check the data.** Make sure published data exists for the exact bullet in your cartridge (see Chapter 15).
4. **Check the fit.** The bullet must sit at least one caliber deep in the case. If the round will feed from the magazine, it must also fit your magazine (see Chapter 24).
5. **Compare BCs fairly.** Compare G7 numbers with G7 numbers. Prefer measured drag data where it exists (see *The Precision Rifle Handbook*).
6. **Buy enough of one lot.** Record the lot on the batch record (see Chapter 27). A different bullet means working up again (see Chapter 28). A new lot of the same bullet needs a check, not a new work-up. Re-measure CBTO with the new lot, since the ogive can differ slightly between lots.[5] Before you load it in bulk, load 10 check rounds at your current charge, or one step lower if it sits at or near the published maximum. If the new lot runs faster by more than twice the noise (see Chapter 30), lower the charge and work up again from below.

IV

Part IV

Load Research

Every load starts as a recipe on paper. Read the published data it comes from (Chapter 15). Then plan the load (Chapter 16). Set the goal, shortlist powders, measure your case capacity and see what to expect before you spend a primer. Plan the work-up. For an improved cartridge or a wildcat, borrow data from a published cartridge.

Published data sets every charge you load.

Chapter 15. Reading Published Load Data **76**
Chapter 16. Planning the Load **79**

Chapter 15

Reading Published Load Data

Key points

- Published data for your exact bullet and powder sets the range you load within, from the start load up to the maximum.
- Each row was measured in one test barrel with one primer, one case and one COAL. Your rifle will differ.
- Pressures in psi and in CUP come from different instruments. They cannot be converted into each other.
- Sources disagree because their rifles, components and methods differ. That is normal.
- A charge printed without a start load is a ceiling only. Your start sits well below it.

Why it matters

Published load data comes from powder and bullet makers. Each load was fired in a test barrel, and only charges that stayed within the cartridge's pressure limit were printed. Many sources also print the pressure they measured. For most handloaders, these tables are the only link to real pressure measurement. Everything else in load development rests on them.

A row in a load table is the record of one test. It is not a promise about your rifle. Your chamber, bore, brass and primer can push pressure higher or lower than the test barrel did. A careful reading tells you three things: where to start, where to stop and how far your setup is from the one that was tested.

Misreading a load table is how handloaders get hurt, and the mistakes are simple ones: reading the row for a powder with a similar name, using one bullet's data for another bullet of the same weight, or treating a maximum-only charge as a start load. Here is how to avoid each mistake.

How it is done

Start and maximum loads

Most tables give two charges for each powder.

- **The start load** is the charge the source tells you to begin with. It sits well below the limit, so it leaves room for a rifle that runs hotter than the test barrel.
- **The maximum load** is the heaviest charge the source fired that stayed within the limit in its test barrel. It is a ceiling, not a target. Never exceed it.

Each charge comes with the velocity the source measured. That velocity belongs to the test barrel, and yours will differ. Some manuals print several steps between start and maximum.

Safety · See Chapter 2
Start at the published start load for your exact components and work up from there (see Chapter 28).

The test conditions

Every source records how its data was taken. These are the conditions that matter.

Test barrel. A shorter barrel gives less velocity (see Chapter 3). Even two barrels of the same length often differ in velocity, because their bores, throats and finishes differ.[1]

Primer. A different primer makes a different load.

Case. Water capacity varies from maker to maker (see Chapter 11).

COAL. Seating deeper than tested raises pressure (see Chapter 24).

Bullet. Two bullets of the same weight can differ in length, bearing surface and construction (see Chapter 14).

Each difference can change pressure, and some can change it a great deal (see Chapter 28).

Pressure: psi and CUP

Published pressures come in psi or in CUP (copper units of pressure). The two scales come from different measurement systems and cannot be converted into each other (see Chapter 4). Compare a CUP figure only with other CUP figures, and a psi figure only with psi.

Published load tables use both units. A CUP figure can sit above or below a cartridge's psi limit, because the two numbers are on different scales. Where a row lists only one pressure, it applies to the maximum charge. Some sources also list pressure for the start load. A dash means the source did not report pressure, not that the pressure was low.

Why sources disagree

Open two sources for the same bullet and powder and their numbers will rarely match. The reasons are ordinary.

- Different test barrels: length, bore, throat and chamber.
- Different primers and cases, so different ignition and different capacity.
- Different COAL for the same bullet.
- Different powder lots. Burn rate varies from lot to lot.
- Different test temperatures, pressure systems and limits. One European powder maker tests at 68 °F and holds its loads to the lower of the C.I.P. and SAAMI limits.[2]

Disagreement is usually not an error in either source, though misprints do happen. That is one more reason to compare sources (see below). Mostly, the spread shows how far a load can move between rifles. So you work up in your own rifle instead of loading someone else's maximum.

Choose the source whose test components match yours most closely. If two sources match equally well, take the lower start load and treat the lower maximum as your limit. If they

disagree widely for your exact components, a pressure test may be needed (see Chapter 16, “When to pay for pressure testing”).

Maximum-only loads

Some sources publish only a maximum charge, with no start load. Work out your own start from it.

```
start charge = maximum charge × 0.90
```

Round the result down to your scale’s resolution, never up. Then work up from there (see Chapter 28).

> **Safety · See Chapter 2**
> Where only a maximum load is published, start at least 10 percent below it. Where a maker asks for a larger margin, such as 15 percent, follow the maker.[3]

Reading published data, step by step

1. Open the maker’s current data, from its latest manual or its website. Makers revise their data, and each new edition replaces the one before.[4]
2. Find your cartridge. Note the maximum COAL and the standard, SAAMI or C.I.P., that sets the pressure limit (see Chapter 4).
3. Find the data for your exact bullet, not just its weight.
4. Read the test conditions. Compare test barrel length, COAL, primer and case with yours, and write down every difference.
5. Find the rows for your exact powder. Never use a powder with a similar name.
6. Read the published start load. Copy the charge and its velocity.
7. Read the published maximum load. Copy the maximum charge, its velocity and the pressure with its unit.
8. If the source publishes only a maximum charge, work out your start load with the formula above.
9. Write all of it on your load record, the written recipe for this load (see Chapter 27), before you open the powder.

> **EASIER ON EP · LOAD LIBRARY · PUBLISHED DATA**
> Load Library shows the published loads for a cartridge and bullet, laid out like a manual page.
> **empiricalprecision.com/loads?tab=published**

Chapter 16

Planning the Load

Key points

- A plan made on paper rules out bad ideas before they cost a bullet, a primer or barrel life.
- A load model shows what to expect between the published start and maximum. Every predicted pressure is for learning, never a replacement for published data.
- An improved cartridge starts from its parent's published data. A wildcat borrows a start load, a maximum charge and a velocity ceiling from a published cartridge with the same bore and a capacity close to its own, but no larger.
- Without published data, only a pressure test measures pressure.
- Plan the work-up on paper before you load: the steps, the rounds per step and the two limits.

Why it matters

Every shot fired to learn something costs a bullet, a primer, some powder, range time and a little barrel life. A plan rules out bad ideas before they cost anything. A bullet your twist cannot stabilize, a powder too fast or too slow for the case and a velocity goal the cartridge cannot reach can all be caught on paper.

How it is done

Set the goal

Write one line before anything else: what the load is for, at what distance and at what velocity. "A match load for 600 yards, still above Mach 1.2 at the target" is a goal. Mach 1.2 is 1.2 times the speed of sound, about 1,340 fps in standard air. "The most accurate load possible" is not, because it gives you no way to choose and no point at which to stop.

You use that target velocity twice: first to shortlist powders below, and later to pick your working charge after the work-up (see Chapter 28). Let the job set the velocity. A hunting bullet must stay above its maker's minimum expansion velocity at your longest shot (see *The Precision Rifle Handbook*, Chapter 22). A target bullet should stay above Mach 1.2 to your farthest target (see *The Precision Rifle Handbook*, Chapters 19 and 20). If the job sets no number, pick a velocity that published data reaches well below the maximum charge, adjusted for your barrel length (see Chapter 3).

For a load you will shoot at distance, add the target size and the hit chance you want. They turn into limits for mean radius and velocity SD (see *The Precision Rifle Handbook*, Chapter 21).

Check that the bullet will fly

No load can fix a bullet that will not stabilize.

1. Before you buy any bullets, work out the stability factor (Sg) with the Miller twist rule and the catalog bullet length (see *The Precision Rifle Handbook*, Chapter 18). Use your twist and the coldest, densest air you expect to shoot in. Before you have a measured

velocity, use the published velocity adjusted for your barrel (see Chapter 3). Aim for 1.5 or more.

2. Buy one box and measure a few bullets with calipers. Work out Sg again with the longest before you buy a lot. Catalog lengths are often nominal.[1]

Shortlist powders from published data

1. Open your published load data at your cartridge and your exact bullet.
2. List every powder with data for that bullet.
3. Adjust each powder's maximum velocity for your barrel length (see Chapter 3 and "Plan the work-up" below). Then compare it with your goal.
4. Keep the powders that reach your goal below their maximum charge, with room to spare.
5. Prefer powders that fill the case well. Some manuals print load density or flag compressed loads. A charge that leaves much of the case empty can ignite less consistently, and ball powders suffer most.[1] For a first load in a new cartridge, choose a full-case load (see Chapter 13).

> **Safety · See Chapter 2**
> Never swap one powder for another because they sit close together on a burn chart (see Chapter 13).

6. Look the survivors up on a burn chart to see where they sit (see Chapter 13).
7. Choose two or three candidates. Every charge you load will still come from published data for that exact powder. Each candidate gets its own work-up from its published start load. You then screen them with a few shots each, drop any that is clearly worse and confirm the best with a large sample (see *The Precision Rifle Handbook*, Chapters 14 to 16).

Before you buy, count the rounds. Each candidate needs its work-up: every step from start to maximum, one to three rounds a step (see "Plan the work-up" below). Each also needs 5 to 10 screening shots. The finalist needs 20 to 30 more to confirm it (see *The Precision Rifle Handbook*, Chapters 15 and 16). Add foulers, the shots that condition a clean bore (see *The Precision Rifle Handbook*, Chapter 14), and a margin. Buy bullets and primers of one lot for the total, and each candidate powder from one lot. Cases are reused, so buy enough for the largest batch you will load at once.

A hunter confirming one proven hunting bullet and powder does not need multi-candidate match screening. Plan for the single work-up plus 10 to 20 rounds at the working charge to confirm zero, chronograph velocity for a DOPE card (see *The Precision Rifle Handbook*, Chapters 10 and 20), and verify reliable feeding.

Worked example. Example numbers. Not load data. Three candidates, each with 10 steps of two rounds and 10 screening shots, need 90 rounds. Add 30 to confirm the finalist and 15 foulers: 135 bullets and primers before the margin.

Measure your case capacity

Take five to ten fired, unsized cases from your own rifle and leave their spent primers in. Fill each with water and weigh the water (see Chapter 11). If your brass is new, measure it after its first firing. The first work-up starts at the published start load and does not wait on the figure. Case capacity is one of the biggest levers on pressure, and cases from different makers can differ by a couple of grains of water.[1] Less room means higher pressure and velocity from the same charge. The model needs the figure, and so do your notes.

Predict before you load

On paper, published data gives you two points: the start load and the maximum load, each with a test-barrel velocity. Between them, velocity rises roughly in step with the charge. You cannot estimate pressure between those points by hand. You know only that the maximum charge stayed within the limit in the test barrel, with the test components.

A load model fills in the space between those points. Use it to learn what to expect. It is never intended to replace the published start and maximum.

Safety · See Chapter 2
Results from any interior-ballistics program rest on assumptions and averages. They are meant to be used together with current loading manuals and cross-checked against tested data.[2]

EASIER ON EP · IGNITION · INTERNAL BALLISTICS
Ignition models a load on your own components and shows how predicted pressure and velocity respond as you change the charge, the case capacity, the COAL or the barrel length. Like every prediction, it is for learning.
empiricalprecision.com/heurisko?tab=ignition

Plan the work-up

Write the plan before you load a round. It sets the steps you load in the workshop and the two lines you stop at on the range (see Chapter 28).

1. Choose the published data whose test components match yours (see Chapter 15). In a semi-automatic, use the maker's gas-gun data where it exists (see Chapter 26). Copy the start charge, the maximum charge and the published ("book") velocity for each.
2. Choose the CBTO you will shoot based on the bullet maker's guidance, your distance to the lands and your magazine length (see Chapter 24). If you have not measured the lands yet, start from the published COAL, or from your magazine length if the rounds will feed from the magazine and the magazine is shorter. Seat a marked dummy round to that overall length and measure its CBTO (see Chapter 24, step 2). Your work-up holds only at that seating depth.
3. Adjust the book velocity for your barrel (see Chapter 3). For a shorter barrel, subtract the velocity lost per inch for each inch of difference. Published barrel tests lose about 17 to 43 fps per inch, depending on the cartridge.[3] Use 43 unless a published barrel test for your cartridge shows its own figure, because the larger loss gives the lower ceiling. For a longer barrel, leave the book velocity as printed. You will stop a little early, which is the safe direction.

Worked example. Example numbers. Not load data. The published data lists 2,900 fps at its maximum in a 24-inch test barrel. Your barrel is 22 inches. Two inches at 43 fps per inch is 86 fps, so your velocity ceiling is 2,814 fps.

4. Write down your two limits: the book maximum charge and the adjusted book velocity. The adjusted velocity is your velocity ceiling. At the range you also stop at any pressure sign, at a step that gains far more velocity than the steps before it, or at anything abnormal (see Chapter 28).
5. Plan the steps: 0.2 to 0.5 gr at a time in rifle loads, and no more than about 2 percent of the charge.[4] As you near the maximum, use the smaller step.
6. Work out the book velocity for each step's charge. Between the published start and maximum, estimate it in proportion to the charge. Adjust each result for a shorter barrel as in step 3, and write it beside the step.

```
fraction      = (charge − start) ÷ (max − start)
book velocity ≈ v_start + fraction × (v_max − v_start)
```

7. Decide how many rounds to load per step. One shot per step is enough for safety, though not for judging accuracy (see Chapter 29). Two or three per step give a steadier velocity trend near the top.
8. Weigh every charge (see Chapter 23). Seat every round at the CBTO from step 2. Load each step in its own labeled row or box. Mark each case with its step number before you charge it, and charge one step at a time.

Improved cartridges and wildcats: borrowing published data

Look first for published data for your exact cartridge. Some improved cartridges have it. The .280 Ackley Improved became a SAAMI standard in 2008.[5] Its maximum average pressure is 65,000 psi, against 60,000 psi for the .280 Remington.[6] Several bullet makers publish load data for the .280 Ackley Improved.[7] A few other improved cartridges have published data too, such as the .257 Roberts Ackley Improved.[8] Published data for the cartridge itself beats every method below.

When there is none, handloaders borrow from a cartridge that has data. How they borrow depends on the kind of cartridge.

An improved cartridge keeps the parent case's head, length and neck. The body is blown out straighter and the shoulder made steeper, so the case holds more powder. Ackley Improved chambers are traditionally cut with headspace about .003 to .004 inch shorter than the parent's.[9] A parent case then fits snugly at the joint of its neck and shoulder. That holds its head against the bolt face while it fire-forms.

1. Ask the gunsmith whether the chamber holds parent brass at the neck-shoulder joint. Not every improved reamer does.
2. If it does not, form a false shoulder to hold the case head against the bolt face while it forms. Expand the neck to a larger diameter. Then run the case into the improved cartridge's full-length die until it just fits the chamber snugly. Without a hold like this, the case forms with too much headspace. That can ruin the brass or even rupture the case.[10]

3. Fire-form with parent factory ammunition, or with parent handloads worked up from the published start load like any new load (see Chapter 28). Expect less velocity than the same load gives in the parent's chamber.[11] Some of the energy goes into forming the case.
4. Measure the capacity of the formed cases (see "Measure your case capacity" above).
5. Work up from the parent's published start load (see Chapter 28). The improved case holds more powder, so a parent charge makes less pressure in it.[11]
6. Stop at the parent's maximum charge or barrel-adjusted maximum velocity, whichever comes first. The larger improved case usually hits the charge limit first, which keeps you on the safe side.
7. To go past either stop, you need published data for the improved cartridge or a comparison cartridge as described below. Otherwise pay for a pressure test.

A wildcat made by necking a case up or down changes the bore. The parent's data no longer applies. Borrow from a comparison cartridge instead.[12]

1. Find a published cartridge with the same bore and a case capacity close to yours, but no larger. Charges from a larger case raise pressure in a smaller one (see "Measure your case capacity" above). Measure both with water if you can, and prefer a maximum pressure no higher than the parent's.
2. Use the comparison's start and maximum charges for your bullet weight, and its barrel-adjusted maximum velocity as your velocity ceiling.
3. Work up from that start (see Chapter 28). Stop at that maximum charge, the velocity ceiling or any pressure sign, whichever comes first.

Both methods rest on velocity. Velocity tracks pressure only between like barrels, bores and bullets. A different throat, freebore or neck clearance changes the pressure behind the same velocity. Matching a borrowed velocity does not prove you match its pressure (see Chapter 28).[13] Treat a borrowed stop as an estimate and keep a margin below it.

> **Evidence · Plausible but unproven**
> Borrowing from a parent or comparison cartridge is long-standing practice, and the physics supports it (see Chapter 28). No known published test measures how far a borrowed velocity ceiling can be off. Only a pressure test checks it.

When to pay for pressure testing

Only an instrument measures pressure. Pay for a pressure test when nothing published covers your load: a wildcat loaded near its ceiling, or published sources that disagree widely for your exact components.[14]

Ballistics laboratories measure pressure with transducers in test barrels made for each cartridge.[15] Few test handloads for individuals, though some European proof-house laboratories test samples of 10 or 20 rounds.[16] Ask first whether the laboratory has a test barrel for your chambering.

V

Part V

Load Assembly

The workshop steps turn a written recipe and a new or fired case into a finished cartridge. First, follow a fixed order of operations and prepare the brass (Chapters 17 to 21). Next, prime, charge, seat and inspect the round (Chapters 22 to 25). For a semi-automatic rifle, apply the extra checks in Chapter 26.

Chapter 17. The Workshop and the Order of Operations 85
Chapter 18. Inspecting and Cleaning Cases 89
Chapter 19. Sizing and Shoulder Bump 94
Chapter 20. Trimming and Chamfering 102
Chapter 21. Annealing 108
Chapter 22. Primer Pockets and Priming 112
Chapter 23. Charging 117
Chapter 24. Seating 121
Chapter 25. Finishing, Labeling and Storage 129
Chapter 26. Loading for Semi-Automatic Rifles 133

Chapter 17

The Workshop and the Order of Operations

Key points

- The workshop steps follow a fixed order, and each one sets up the next.
- Each step sits where it cannot spoil earlier work. Depriming comes first. Cleaning and annealing come before sizing, and sizing comes before trimming. A final clean follows the trim, and the chamfer is the last cut before priming.
- A step that changes a dimension is a step to measure. A reading that is not written down is lost.
- When a whole batch goes through each step together, every case in it sees the same setup.
- A log kept from the first case lets you trace an odd group or a stiff bolt back to its cause.

Why it matters

Every workshop step changes the case, and some steps undo others. Sizing pushes brass forward and makes the case longer. A case trimmed before sizing can come out of the die too long. Annealing changes how far brass springs back, so a shoulder set before annealing may move. Lube left on a case can reach the powder.

The order of the steps matters, and it is easy to get wrong. The table below gives the whole order, with the reason for each position.

How it is done

The order of operations

Step	Job	Chapter	Why it sits here
1	Keep batches apart. Sort mixed brass by headstamp.	18	Lot and firing count cannot be sorted back out of a mixed pile.
2	Check the heads, set aside Berdan and steel cases, then deprime	18	Gas-leak and pressure signs show best while the spent primer is in and the soot is still on. Spent primers carry lead, so they come out first. A cheap decapping die meets the grit instead of the sizing die.
3	Coarse clean and dry	18	Grit scratches dies and chambers. Dirt hides cracks.
4	Inspect	18	Bad cases leave before you spend work on them.
5	Anneal (optional)	21	Heat changes springback, so anneal before you set any dimension.
6	Lubricate	19	A dry case can stick in the sizing die.
7	Size and bump the shoulder	19	Sizing pushes brass forward. Length is not final yet.
8	Expand the neck on a mandrel (optional)	19	The mandrel moves brass too.
9	Measure length and trim	20	Only now is the length final.
10	Remove any pocket crimp. Clean or uniform primer pockets, or deburr flash holes (optional).	22	The final clean washes out the chips.

Step	Job	Chapter	Why it sits here
11	Final clean and dry	18	Lube can reach the powder. On a loaded round it can raise the thrust on the bolt.[1] The clean also takes off the chips and the last residue.
12	Chamfer and deburr. Flare the mouth for flat-base bullets (optional).	20	The cutter leaves a burr. This is the last cut, just before the primer goes in. A flat base needs a lead-in. Tap the chips out.
13	Prime	22	A charged case would spill powder through the flash hole.
14	Charge	23	The seating die is already set on a dummy round (see Chapter 24), so no charged case waits while you set it up. Look into every case before a bullet covers it.
15	Seat. Crimp if the load calls for it, and taper crimp a flared mouth.	24	Seating closes the case and sets the CBTO.
16	Inspect and gauge	25	A last look and a fit check.
17	Label, record and store	25	Write the record while the facts are fresh.

New brass starts at step 1. It has no spent primers and no grime, so it skips steps 2 and 3. It still gets the inspection in step 4, then goes on from step 6 (see Chapter 20).

Eight rules set this order: deprime first, clean and anneal before you size, size before you trim, run the final clean after trimming, chamfer just before you prime, prime before you charge, and charge right before you seat. Decide which optional steps you will use and keep to them, so every batch shares the same history.

Where to measure

Measure	When
Water capacity	Five to ten fired, unsized cases with their spent primers in, set aside before you deprime (step 2), once per lot and rifle (see Chapter 11)
Fired base to shoulder	Before you set a sizing die for a rifle (see Chapter 19)
Sized base to shoulder and neck diameter	Every case of the first batch, then one in five (see Chapter 19)
Case length	After sizing, and again after trimming (see Chapter 20)
Runout (optional)	On fired and sized cases, and on loaded rounds (see Chapter 19)
Charge weight	Every charge for a work-up or a precision load, and a check-weighed sample for practice loads (see Chapter 23)
CBTO	Every round at first, then a sample (see Chapter 24)
Velocity	At the range, as your check on pressure (see Chapter 28)

Workshop workflow and station discipline

A few habits keep the order working from batch to batch.

- **One batch, one step.** Take the whole batch through each step before you set up for the next. Size every case in the batch before you prime any of it. Check the shoulder bump on a sample before you trim. Every case in the batch then sees the same setup.
- **One powder, one primer.** Keep only one powder and one primer type on the workbench at a time (see Chapter 2). Before you bring out a different powder or primer, put the first powder back in its original container and the primers back in their factory packaging.

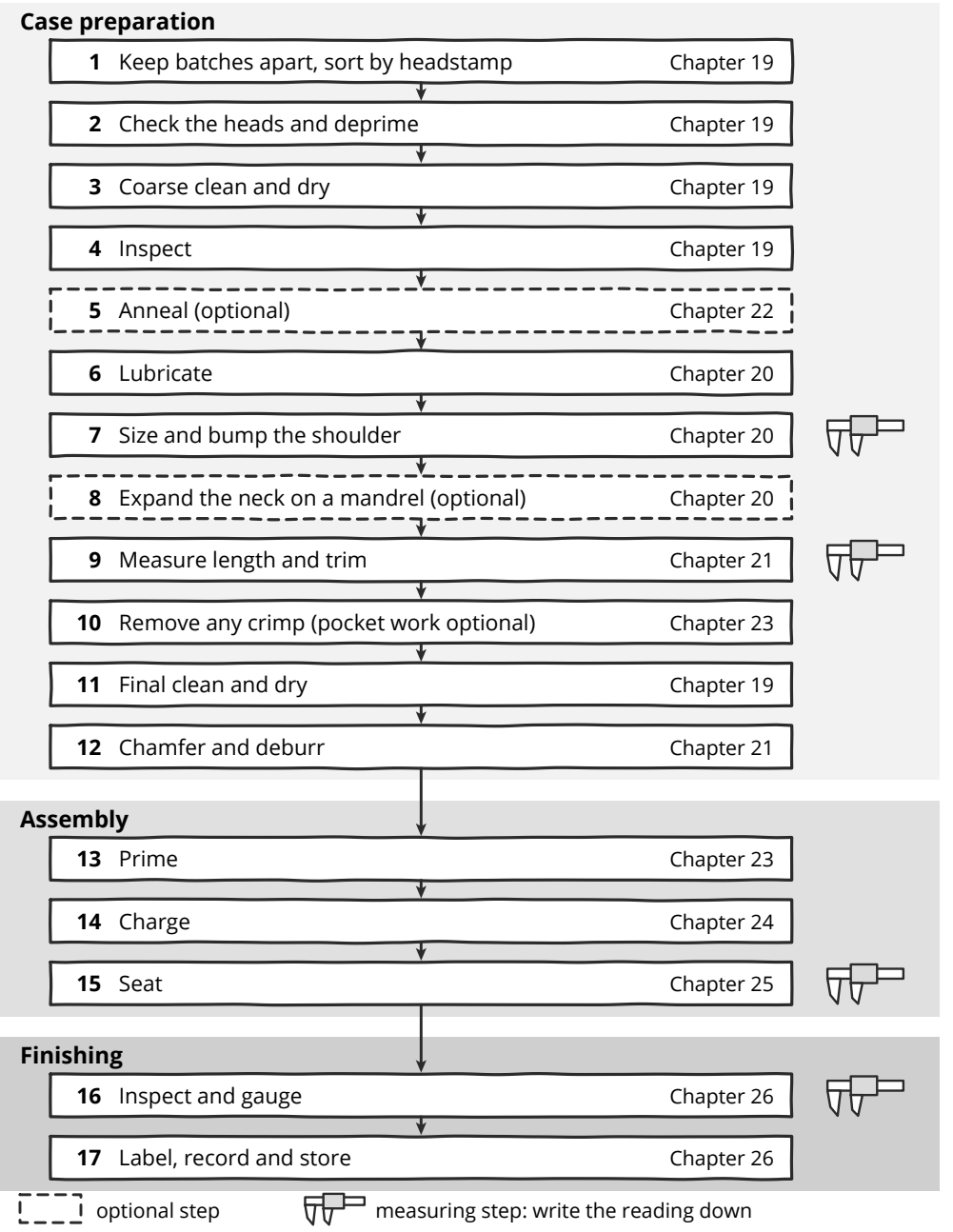

Figure 17-1. The workshop order of operations on one page. Each box names the step and the chapter that teaches it.

- **Die setup.** Each time you thread a sizing or seating die into the press, check its setting before you run the batch. Check a sizing die by comparing a sized case with your fired cases on a base-to-shoulder comparator (see Chapters 9 and 19). Set a seating die on a dummy round, checked with a bullet comparator, before you charge any case. Before you prime, set aside one sized case for the seating dummy. Leave it unprimed and mark it (see Chapter 24).
- **Progressive press.** It demands strict discipline (see Chapter 5 for the press). Use it only for loads you have already worked up. Weigh every work-up charge (see Chapters 16 and 23).
  - It throws charges by volume, so check them on a scale at intervals.

- Size and trim the cases in a separate prep pass, so no case is trimmed before its final sizing. Leave the sizing die off the press, so the press does not size the trimmed cases again.
- Pull each stroke smoothly all the way down, and pause at the bottom before you return the handle.
- Look into every case after the powder station and before its bullet is seated. A powder-check station adds to that look and never replaces it.
- If you feel any hitch, such as a tipped primer or a case that enters hard, stop at once. Clear the shell plate, or check every station one by one, before you cycle the press again. Never guess the state of a round left in the press after a stop.

Record keeping from day one

A workshop log turns a box of ammunition into evidence. Without one, an odd group or a stiff bolt cannot be traced to its cause. Give each batch a page in the log and an ID, and write the ID on the box. Fill in the page as you work (see Figure 17-2). Note each lot as you open its container, each step with its date and each reading as you take it. Keep every raw reading. An average can be worked out later, but a lost reading is gone. The page is the batch record, one link in a chain of IDs that ties each batch to its load, its rifle and every shot fired from it (see Chapter 27).

Workshop log Batch *B3-2*

Rifle *Rifle 1* Started *8 May*

Brass

Batch *D-3* Firings *3* Cases *20*

Prep	date
deprime, clean wet, dry	*8 May*
anneal	*9 May*
lube, size, bump .002	*10 May*
trim to 2.005, final clean, dry	*11 May*
chamfer, deburr	*12 May*

Die *full-length, bushing .332* Insert *S1*

Components

Primer *Primer 1, lot 07*

Powder *Powder 1, lot 114*

Bullet *Bullet 1, lot 221*

Load *B3, see the load record*

Shoulder readings, insert S1

case	1	2	3	4	5	6	7	8
fired	*1.631*	*1.630*	*1.632*	*1.631*	*1.630*	*1.631*	*1.632*	*1.630*
sized	*1.629*	*1.629*	*1.630*	*1.629*	*1.629*	*1.629*	*1.630*	*1.629*

Example numbers. Not load data.

Figure 17-2. One page of a workshop log, filled in for one batch.

Chapter 18

Inspecting and Cleaning Cases

Key points

- Keep each brass batch apart from the day you buy it. Lot and firing count cannot be sorted back out of a mixed pile.
- Look at every head before its primer comes out. Then deprime every case on a separate decapping die.
- A coarse clean comes before inspection. A final clean after sizing and trimming takes off the lube and the chips.
- An inspection under bright light, after the coarse clean, weeds out bad cases before any work is spent on them. A split, a crease, a loose primer pocket or a sign of head separation ends a case's life.
- Head separation starts as a thin band inside the case just above the head. A simple wire probe finds it.

Why it matters

A case is a pressure vessel. For an instant it seals the chamber at full pressure. A split lets hot gas escape. A case that separates near the head can send gas back into the action. Inspection finds both faults before you load the case.

Keeping batches apart keeps each one uniform. Cases from different makers differ in capacity, so mixed headstamps mean mixed pressures (see Chapter 11). Lot and firing counts give each case a history you can trace. They also tell you when a batch is near the end of its life.

Cleaning protects the tools that come next. Grit scratches dies and chambers. Dirt hides cracks. Clean cases also measure true. A final clean after sizing and trimming takes off the lube before it can reach the powder.

How it is done

Keep batches apart

1. **Keep brass sorted from the day you buy it.** Sort it first by headstamp, then by lot, then by firing count. Read the maker and the cartridge on each head. Give each headstamp its own container. A new headstamp is a component change, so work the load up again (see Chapter 28).
2. **Name each batch.** A brass batch is one headstamp, one lot and one firing count (see Chapter 11 for lots). If you do not know the lot, treat brass bought together as one lot. Give each batch a brass batch name, such as D-3, and write it on the box and in your log. It is not the batch ID of a loading (see Chapter 27). A marker dot on the head for each firing is one way to keep count.
3. **Sort a mixed pile by headstamp only.** Once cases mix, their lot and firing count cannot be sorted back out. Brass picked up at a range is one such pile. Sort it by

headstamp and treat each headstamp as its own batch. Its history is unknown, so treat it as fired more than once and probe every case (step 16).

Check the heads, then deprime

Look at each head before its primer comes out. Gas-leak and pressure signs show best while the spent primer is in and the soot is still on.

4. **Look for gas leaks.** A dark smudge around the spent primer means gas leaked past it. That points to a loose pocket or to high pressure. A loose pocket also shows when a new primer seats with almost no force (see Chapter 22). Discard any case with a loose pocket.

A pressure sign on a case fired with your own load means that charge is too hot for this rifle. Do not load that charge again. Set your maximum below it and note the sign in the work-up record (see Chapters 27 and 28). In a semi-automatic, judge ejector marks against those at the start load (see Chapter 26).

5. **Set aside Berdan and steel cases.** Shine a light into each mouth. A case with two small offset flash holes is Berdan primed. These are best discarded, since a standard decapping pin breaks on them.[1] Set Berdan and steel cases aside before they reach the decapping pin.
6. **Deprime every case.** Use a universal decapping die (see Chapter 5). The spent primers drop into the catch tray. Spent primers carry lead residue. Empty the tray and wash your hands (see Chapter 2). The decapping die does no sizing, so dirty brass does it no harm. The costly sizing die then sees only clean brass.

The coarse clean

The first clean strips grit and heavy grime before you inspect the brass. It protects your dies and exposes defects (see Chapter 6 for cleaning tools). Shine is cosmetic.

7. **Clean off the grit and heavy grime.** Run your cleaner as its maker directs, long enough to take off the grit. The brass does not need to shine. Work with ventilation. Spent primer residue contains lead, so wash your hands after handling media and dirty cases (see Chapter 2). Avoid cleaners that contain ammonia, which can make brass crack.[2]
8. **Separate the media and check every case.** Wear a fitted respirator with N100 or P100 filters whenever you empty dry tumbling media.[3] Look into each case and through each flash hole. Remove any media or pin you find.
9. **Dry the cases fully.** Stand them mouth down in warm air. Water left in a case can wet the powder, and moisture in powder changes velocity (see Chapter 13). Look into a few cases against a light. No droplets should show inside or in the flash hole.

Inspect

One inspection now weeds out every bad case before you spend work on it. Treat range brass as brass of unknown history, fired more than once (step 3).

10. **Look at every case under bright light.** Turn it one full turn. Check the mouth, the neck, the shoulder, the body and the head.

11. **Confirm the primer type and look for crimps.** Shine a light into each mouth. One central flash hole means a Boxer case. Two small offset holes mean a Berdan case. Discard any Berdan case that slipped through step 5, and set aside any steel case. A swaged ring or stab marks on the head around the primer pocket mean a crimp. Keep that batch apart. The crimp comes out before priming (see Chapter 22).
12. **Discard any case with a split.** Splits often start at the mouth and run down the neck (see Figure 18-1). They can also open in the shoulder or the body.

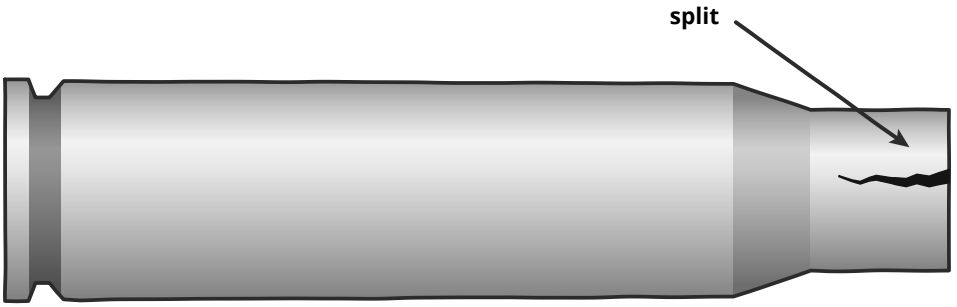

Figure 18-1. A split neck.

13. **Sort the dents.** Sizing straightens a small dent at the mouth. A shallow dimple on the shoulder usually comes from excess lube and is harmless unless the shoulder or body has collapsed.[4] Discard any case with a sharp crease or fold in the brass (see Figure 18-2).

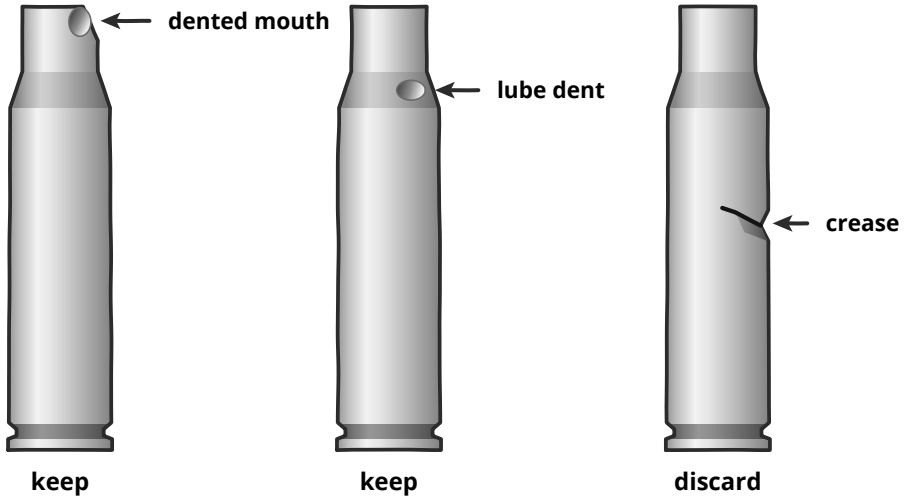

Figure 18-2. Three dented cases side by side.

14. **Check the head.** Look for cracks and a damaged rim.

Inspect new brass too, and prepare it before its first loading (see Chapter 20).

Check for incipient head separation

A case that has room to move forward in the chamber stretches each time it fires. The stretch happens in a band just above the solid head. Brass flows out of that band and the

wall thins. In time the case can break in two there. Excess shoulder bump can cause it (see Chapter 19).[5] Check every batch that has been fired more than once.

> **Safety · See Chapter 2**
> A case that has started to separate can fail under pressure and release gas into the action. Distinct lines above the case web are a reason to discard brass.[6]

15. **Look for a bright ring.** A thin, bright line around the body just above the head is the outside sign (see Figure 18-3).

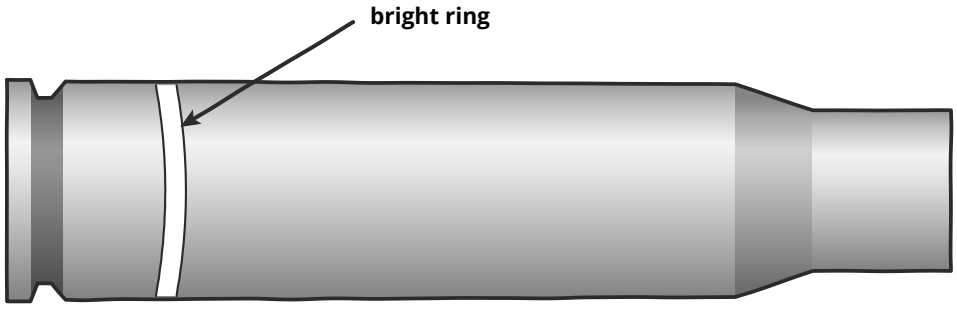

Figure 18-3. The bright ring of an incipient head separation.

16. **Feel inside every case with a probe (see Chapter 9 for how to make one).** Slide the probe to the bottom. Press the tip lightly against the wall and draw it up slowly. A groove that catches the tip means the wall has thinned (see Figure 18-4). Turn the case and check again.

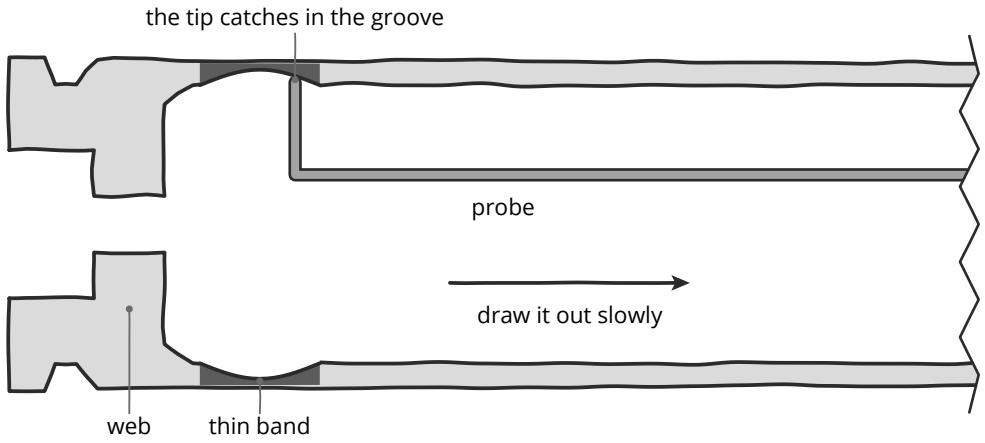

Figure 18-4. How the probe finds the thin band.

17. **Section a sample.** Every few firings, cut one case from the batch in half lengthwise. The thin band shows plainly on the inside wall (see Figure 18-4).

18. **Act on what you find.** Discard every case with a ring or a groove. Crush the neck of each discarded case so it cannot return to a batch. Record every discard in your log with its reason, such as a split neck, a loose pocket or a head ring. Then find the cause in your sizing (see Chapter 19).

The final clean

After sizing, trimming and any pocket work, the batch comes back for a final clean (see Chapters 19, 20 and 22). It takes off the lube, the brass chips and the last residue.

19. **Clean the batch again.** Clean the cases as in step 7. Separate the media and look through every flash hole for media, pins and chips (step 8). Dry the cases fully (step 9).
20. **Inspect again.** Sizing and trimming work the brass, so a crack can open or show only now (see Figure 18-5). Repeat steps 10 to 15 on any case that looks doubtful.

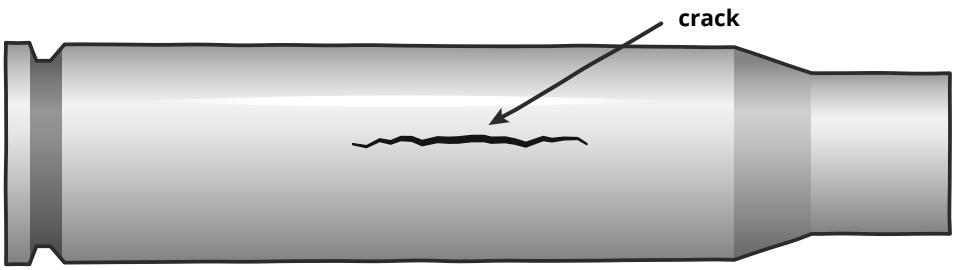

Figure 18-5. A crack found at the second inspection.

Then chamfer and deburr the mouths (see Chapter 20) and prime the cases (see Chapter 22).

Chapter 19

Sizing and Shoulder Bump

Key points

- Fired cases from your own chamber are the reference for setting the sizing die.
- A small bump, .001 to .002 inch for a bolt action, lets the case chamber easily without leaving it room to stretch.
- Neck tension comes from interference. A bushing sets it from outside the neck, a mandrel from inside.
- Runout can show on fired cases, sized cases or loaded rounds. Where it first shows points to its source.
- Once the first batch shows steady readings, a sample is enough.

Why it matters

A bottleneck case stops in the chamber on its shoulder (see Chapter 4). When it fires, the case swells to fill the chamber and then springs back a little. Sizing squeezes it back down so it chambers again. The die also pushes the shoulder back toward the head. That move is the bump.

With too little bump, the bolt closes hard or not at all. With too much, there is a gap between the shoulder and the chamber, and the case stretches just above the head every time it fires (see Chapter 18). The right bump is small, and you measure it against your own chamber.

The neck holds the bullet. Its grip depends on how much smaller the sized neck is than the bullet. That difference is the interference, and sizing sets it.

How it is done

Choose a sizing method

Pick the die for your rifle and your goal (see Chapter 5).

Method	What it sizes	Use it when
Full-length die	Neck, shoulder and body	The default for any rifle.
Full-length bushing die	Shoulder and body, with a bushing for the neck	You want to choose neck tension.
Neck die	Neck only	Bolt actions only, with cases fired in this rifle. The body still grows, so a body or full-length die is needed later.
Body die	Shoulder and body only	Neck-sized cases have grown tight in the chamber.

Belted magnums headspace on the belt by standard (see Chapter 4), but size them by the shoulder like any other bottleneck case. Push the shoulder back no further than smooth chambering needs. Belted cases tend to stretch just ahead of the belt, and oversizing shortens their life.[1]

Contested: neck sizing shoots smaller groups

The claim. A neck-sized case keeps its chamber's shape, so it holds the bullet in line and shoots smaller groups.

The physics. A fired case does fit its chamber closely. But the body and shoulder grow a little with each firing. Sooner or later the bolt closes hard, and the case needs a body die or a full-length die. A full-length die set for .001 to .002 inch of bump also leaves the case close to chamber size.

The test. Size one batch each way and load both the same. Fire about 35 of each in interleaved blocks, pool each batch's groups into one composite group and compare them (see *The Precision Rifle Handbook*).

The data. No large-sample controlled test has been published. In a 2024 survey, 94 percent of top Precision Rifle Series (PRS) shooters sized full-length.[2]

The verdict. Plausible but unproven. No large-sample test shows a precision gain or rules it out. The popularity of full-length sizing among top shooters is not proof either. Run the test above if the question matters to you.

Measure fired brass from your own chamber

1. **Pick five to ten cases fired in this rifle.** Keep them unsized as your fired reference. If you read runout, use them for step 15 too. Any maker will do, such as factory cases fired in this rifle or the cases from your baseline (see *The Precision Rifle Handbook*). Use cases fired with a normal load, not a light one. Measure them clean and dry, before any lube touches them.

If you have no fired cases yet. Set the die from new brass. Measure a few new cases base to shoulder. Back the die off, size a case and turn the die down in small steps until the whole neck is sized. Stop before the base-to-shoulder reading drops. After the first firing, measure those cases (step 2) and set the die for bump (steps 5 to 9).

2. **Measure each case with the base-to-shoulder comparator.** Clamp it to the caliper jaws (see Chapter 9). Zero the caliper the same way every time. Seat the case head flat on the fixed jaw and close the jaws gently on the shoulder (see Figure 19-1). Write down every reading. Work out the average and the spread.

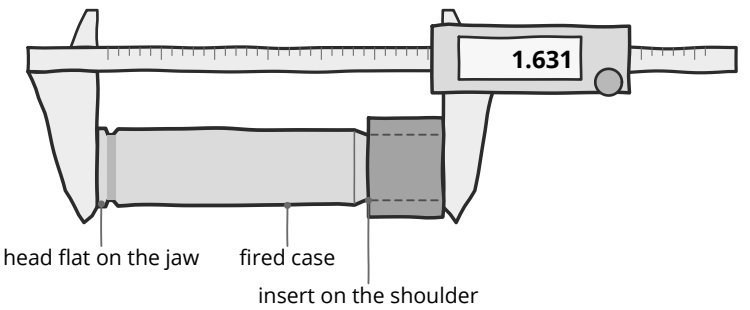

Example numbers. Not load data.

Figure 19-1. Measuring base to shoulder on a fired case.

```
Fired readings (inch):  1.631  1.632  1.631  1.632  1.631
Average = 8.157 ÷ 5 = 1.6314 (call it 1.631)
Spread  = 1.632 − 1.631 = .001
Bump for a bolt action = .001 to .002
Target sized reading   = 1.629 to 1.630
```

Example numbers. Not load data. The absolute readings depend on the insert. The differences between them do not.

Lubricate

If you anneal, do it before you lube (see Chapter 21).

3. **Put a thin film on the case body.** Roll the cases on a lube pad, or spray them standing in a loading block (see Chapter 5). Keep lube off the shoulder.
4. **Lube the inside of the neck lightly if your die has an expander ball.** A neck brush dipped in dry lube does the job. The ball then passes without grabbing.

Watch the first cases. Excess lube trapped in the die dents the shoulder. Too little lube can stick a case in the die. If one sticks, stop and do not force the handle. Free it with a stuck-case remover made for the die (see Chapters 5 and 31). On a long run, swab the die after about 50 cases.[3]

Set up the full-length die by measurement

5. **Set the pin and start high.** Fit a starting bushing if your die takes one (see step 10). Take out the expander ball if you will open necks on a mandrel (see step 12). The decapping pin should stand at least 3/16 inch below the die.[4] Raise the ram and screw the die in until it touches the shell holder (see Figure 19-2). Lower the ram and back the die out one full turn. A shoulder pushed back too far cannot be pulled forward again, so start long and work down.

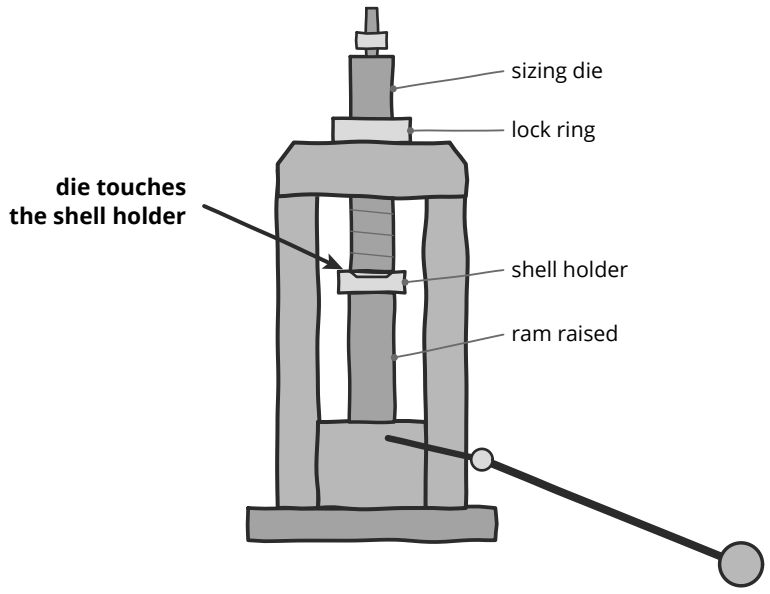

Figure 19-2. The die touching the shell holder with the ram raised.

6. **Size one lubed case and measure it.** Wipe off the lube before you measure. Use the same insert and the same zero as for the fired cases (see Figure 19-1).
7. **Turn the die down in small steps.** Size the same case after each step and measure it again. Turn the die down an eighth of a turn at a time (about .009 inch) until the shoulder reading starts to drop. Once the shoulder moves, turn only about 5 degrees at a time (about .001 inch). If the first drop overshoots your target bump, back the die out an eighth of a turn, take a fresh fired case, and work down in 5-degree steps. The thread math tells you how far each turn moves the die.

```
Most dies: 14 threads per inch
Die travel per full turn = 1 ÷ 14 = .0714 inch
Turn for .001 inch = .001 ÷ .0714 = .014 of a turn
.014 × 360 degrees = about 5 degrees
```

Example numbers. Not load data. The math holds only while the die floats above the shell holder. Once they touch, more turning only loads the press frame. The shoulder then moves less than the math says, and less evenly.

8. **Stop at the target and check the fit in the rifle.** Stop when the sized reading is .001 to .002 inch below the fired average, or .003 to .005 inch below it for a semi-automatic.[5] Chamber the sized case. The bolt should close with the same feel as on an empty chamber. In a semi-automatic, check the case in a case gauge instead (see Chapter 26).
9. **Lock the ring.** Once the case fits, lock the ring. Mark the die and the ring so any later movement shows.

> **Evidence · Supported by data**
> Excess shoulder bump shortens case life and can cause head separations.[6]

Neck tension

Neck tension is the grip of the neck on the bullet. Interference is the part you set with tools. It is the bullet diameter minus the inside diameter of the sized neck. Most loaders work between .001 and .003 inch. Pick a value in that range and hold it steady. Neck hardness, wall thickness and the length of bullet held in the neck also change the grip.

```
Neck inside  = sized neck outside − (2 × neck wall thickness)
Interference = bullet diameter − neck inside diameter
Quick check  = loaded neck outside − sized neck outside

Example (.308 Win):
  Bullet .3080, neck wall .0135, sized outside .3325
  Neck inside = .3325 − .0270 = .3055
  Interference = .3080 − .3055 = .0025 inch
  Loaded outside .3350 − sized .3325 = .0025 inch
```

Example numbers. Not load data. The check needs no wall measurement, so it is the quick way to confirm interference in the workshop. With a standard full-length die, the expander ball sets it for you. Read it with the check above. To choose a different value, use a bushing or a mandrel (see Chapter 5).

With a bushing

10. **Choose a bushing.** Measure the neck of a round loaded with your bullet in this brass (see Figure 19-3). With no such round, add twice the neck wall thickness to the bullet diameter. Start with a bushing smaller than that figure by the interference you want.

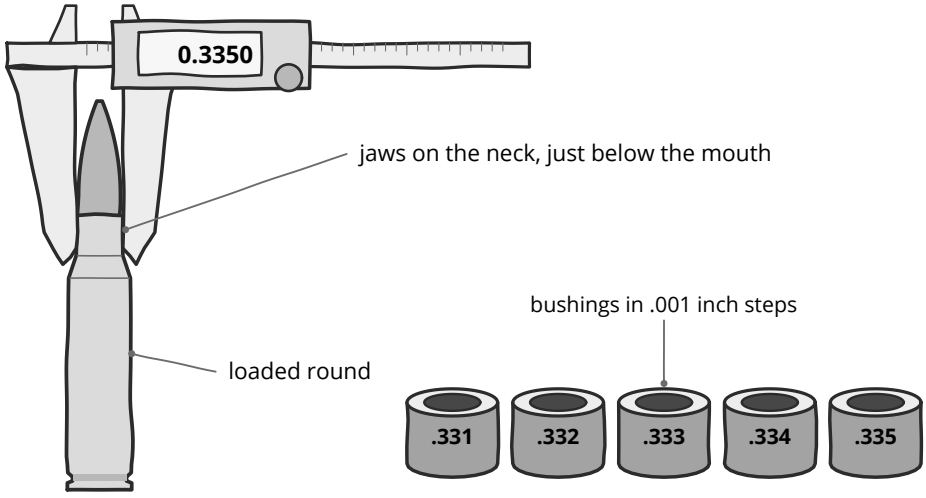

Example numbers. Not load data.

Figure 19-3. Measuring the neck of a loaded round, with a set of bushings beside it.

11. **Size a few cases and check them.** Brass springs back after it leaves the bushing, so the neck reads larger than the bushing (see Figure 19-4). Use the check above. Change the bushing one .001 inch step at a time until it gives your interference.

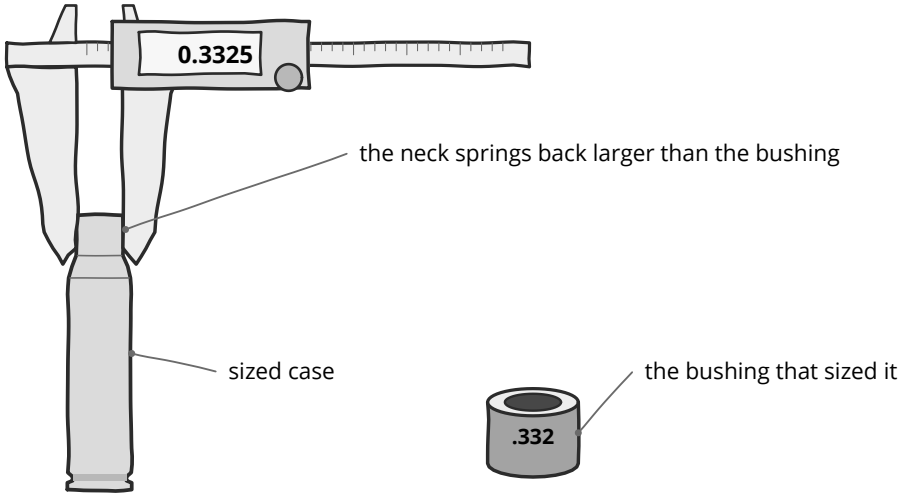

Example numbers. Not load data.

Figure 19-4. Measuring a sized neck after a bushing die.

With an expander mandrel

12. **Size the neck smaller than the mandrel.** Use a sizing die with no expander ball (see Figure 19-5), or one with a small bushing.

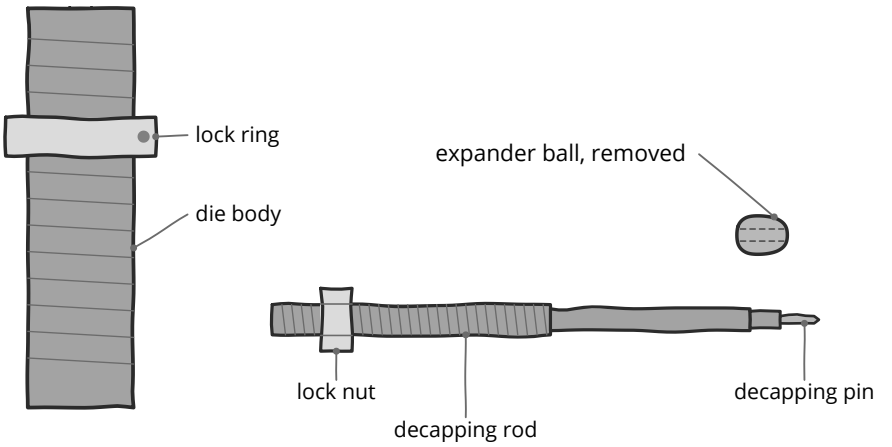

Figure 19-5. A sizing die with the expander ball removed.

13. **Open the neck on the mandrel.** The mandrel sets the inside diameter directly. Because the brass springs back slightly smaller after the mandrel comes out, pick a mandrel about .0005 to .001 inch larger than your target inside neck diameter. Measure a sized neck and adjust if needed.

An expander ball or a mandrel can add runout. Measure your own (see the runout steps below).

Evidence · Supported by data
Live-fire testing found no link between neck tension and group size, unless the tension was heavy enough to damage bullets as they were seated. Tension that heavy also tends to make CBTO vary more.[7] Tests also show almost no link between neck tension and muzzle velocity across normal interference (.001 to .003 inch). At short to medium ranges, velocity differences move bullet drop so little that groups remain circular rather than vertically strung (see Chapter 31).

Evidence · Plausible but unproven
Opening necks on a mandrel makes neck tension more uniform. In one small test, new necks opened on a mandrel needed less seating force and gave smoother force curves than untouched new necks.[8] In the 2024 survey, 54 percent of top PRS shooters used a mandrel.[2] Popularity is not proof.

EASIER ON EP · ANALYSIS · STATISTICAL TOOLS
Record seating force or neck comparator readings for your rounds in Sessions. Analysis pairs them with your chronograph readings to test whether neck tension is moving velocity.
empiricalprecision.com/analysis

Neck turning and neck-shoulder donuts

Neck turning shaves brass from the outside of the case neck to make the wall thickness uniform all the way round. Factory chambers have generous neck clearance, so standard brass chambers without turning. Tight-neck custom match chambers are cut to a specific

loaded neck diameter. Cases for those chambers must be turned so the neck has enough clearance to release the bullet safely on firing.

Repeated firing and sizing also cause brass to flow forward from the shoulder into the neck-shoulder junction. That thickened internal ring is called a donut. When long, heavy bullets are seated deep into the case, as is common in overbore cartridges such as the 7mm Remington Short Action Ultra Magnum (7mm SAUM), the bullet's shank can reach the donut. That contact raises seating force, makes neck tension uneven, and can raise chamber pressure if the thickened neck pinches the bullet in the chamber. Check for a donut by sliding a bullet or a pin of bullet diameter down through a sized neck by hand. If it stops or drags at the neck-shoulder junction, ream the inside of the neck, expand the neck on a mandrel and turn the outside, or seat the bullet ahead of the junction if your chamber and magazine allow it.

> **Evidence · Plausible but unproven**
> Neck turning is required for tight-neck custom chambers to maintain safe neck clearance. In standard factory chambers with quality brass, large-sample controlled tests have not shown a clear group-size gain from neck turning alone.

Size the batch

14. **Size the batch and sample it.** Measure every case in the first batch. Once the readings hold steady, measure one case in five. If the readings drift, stop and check the lube and the brass hardness first (see Chapters 21 and 31). With a mandrel, open each neck after sizing (step 13). Leave the lube on the batch for now. The final clean takes it off after trimming (see Chapter 18).

Runout

Runout is how far the neck or the bullet swings off the case axis in one turn. The full swing is the total indicated runout (TIR). Reading it takes a concentricity gauge (see Chapter 9), and these steps are optional.

15. **Read a fired neck, then a sized neck.** Rest the case body on the gauge supports, one near the head and one near the shoulder. Put the indicator tip on the neck. Turn the case one full turn and note the highest and lowest readings.
16. **Read a loaded round.** Put the tip on the bullet just ahead of the case mouth (see Figure 19-6). Turn the round one full turn and note the readings.
17. **Work out the TIR and find the source.** Use the table below. Set your own runout limit from your records, and test it with enough shots (see *The Precision Rifle Handbook*).

```
TIR = highest reading − lowest reading
Example: .0021 − .0004 = .0017 inch
```

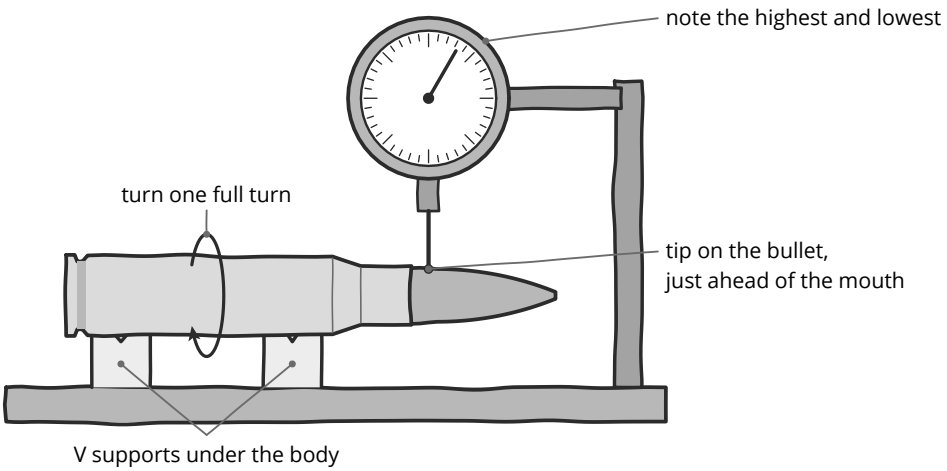

Figure 19-6. Reading runout on a loaded round.

Example numbers. Not load data.

Where runout shows	Likely source	What to try
Fired cases	The chamber or the brass	Check neck wall thickness around the neck. Sort out uneven cases.
Sized cases, but not fired cases	The sizing die or the expander	Lube the neck. Try a bushing or a mandrel.
Loaded rounds, but not sized cases	The seating die	Check the seater stem fit (see Chapter 24).

Evidence · Plausible but unproven
Lower runout gives smaller groups. Straight ammunition should start straight into the throat. No public large-sample test has yet tied a runout limit to group size.

Chapter 20

Trimming and Chamfering

Key points

- Cases grow when they are fired and sized, so length is final only after sizing.
- A case longer than the maximum case length must never be loaded. It can pinch the bullet and raise pressure.
- The trim-to length sits .005 to .010 inch below the maximum. That margin lets a case grow for a firing or more.
- Every trim leaves a burr. An unchamfered mouth can shave the bullet jacket or crush the shoulder in seating.
- Growth per firing tells you when to trim, and fast growth can point to too much shoulder bump.

Why it matters

Brass flows when a case fires and again when it is sized. Some of it moves forward into the neck, and the case gets longer. How fast it grows depends on the chamber, the load and how hard the sizing die works the brass. No rule of thumb fits every rifle, so you measure.

A chamber's neck is cut a little longer than the longest case it is made for. Ahead of the neck, the chamber narrows into the throat. A case that has grown too long pushes its mouth into that narrowing. The mouth is squeezed onto the bullet, so the bullet is held harder and starts to move later (see Figure 20-1). Pressure rises. A long case can also make the bolt hard to close.

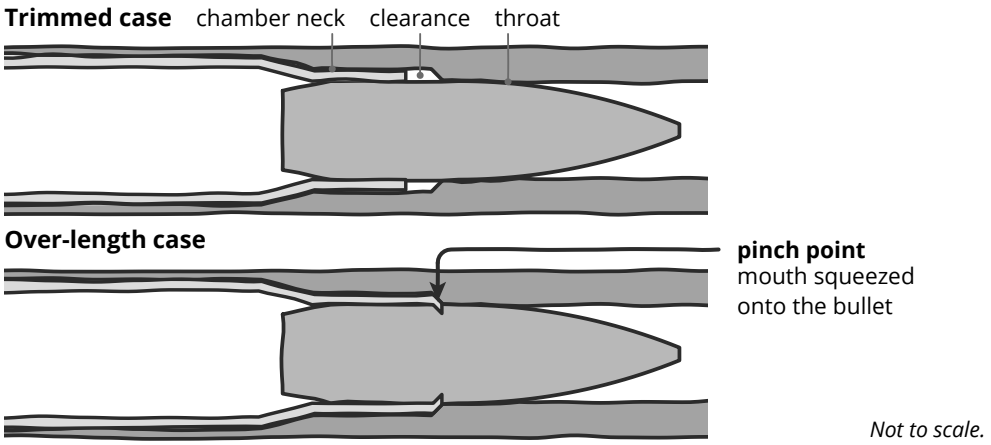

Figure 20-1. Why an over-length case is dangerous.

The trim-to length leaves a margin below the maximum. A trimmed case can then grow for a firing or more before it reaches the limit.

Uniform length has a second purpose. Cases of one length should grip and seat bullets the same way.

How it is done

Know your two numbers

Every cartridge has two published lengths. The maximum case length is the industry limit. The trim-to length is the length you cut back to. It is usually .005 to .010 inch under the maximum.[1]

Cartridge	Maximum case length (inch)	Trim-to length (inch)
.308 Winchester	2.015	2.005
6.5 Creedmoor	1.920	1.910

Example numbers. Not load data. Take yours from the load data for your cartridge.

Trimming a little under the trim-to length buys more firings before the next trim. The cost is a slightly shorter neck to hold the bullet. Pick one target length for each batch and keep it.

Prepare new brass

New brass is not always uniform. Mouths can arrive dented or out of round, and lengths can vary within a box. Run new cases through your sizing die or over an expander mandrel to round out any dented mouths (see Chapter 19). Then measure and trim them to one length, give them a final clean (see Chapter 18), and chamfer and deburr the mouths just before priming.

Measure

1. **Wipe the case, then measure.** Wipe the lube off each case before you measure it. The rest of the lube comes off in the final clean, after trimming (see Chapter 18). Lube left on a case can reach the powder. Measure after sizing, since sizing makes cases longer. If you use a mandrel, measure after that step too.
2. **Measure from the head to the mouth.** Zero the caliper and wipe its jaws (see Chapter 9). Hold the case square in the jaws. Turn it a quarter turn and measure again. Use the longer reading.

> **Safety · See Chapter 2**
> A case longer than the maximum can jam its mouth into the end of the chamber neck. The mouth then pinches the bullet and pressure rises. Stretched cases may cause chambering problems and higher than expected pressures.[2] Never load a case longer than the maximum.

3. **Sort by length.** Use the table below, with one tray for each row.

Measured length	Action
Over the maximum	Trim before loading. No exceptions.
Between trim-to and maximum	Trim now, or leave it until the batch reaches its trim line (see “Track growth and decide when to trim” below).
At or under trim-to	Load as is, or trim the batch to one length.

Many precision loaders trim every case every time. In a 2024 survey, 58 percent of top Precision Rifle Series (PRS) shooters did.[3] That keeps a batch at one length.

Evidence · Plausible but unproven
Trimming every case to one length every firing improves precision. Uniform length should make grip and seating more uniform. No large-sample public test shows a gain on target. The 58 percent survey figure shows popularity, not proof.

A case well under the trim-to length is safe to load. It holds less of the bullet, though, so keep it out of a batch you trim to one length.

Trim

Choose a trimmer to suit how many cases you load (see Chapter 7). A trimmer that locates on the shoulder cuts even lengths only when the shoulders are sized evenly. That is why trimming follows sizing. Keep cutters sharp. A dull cutter tears brass and leaves heavy burrs.

4. **Set the trimmer with a test case.** Use a sized case. Cut it and measure it (see Figure 20-2). Adjust until it comes out at your target length.

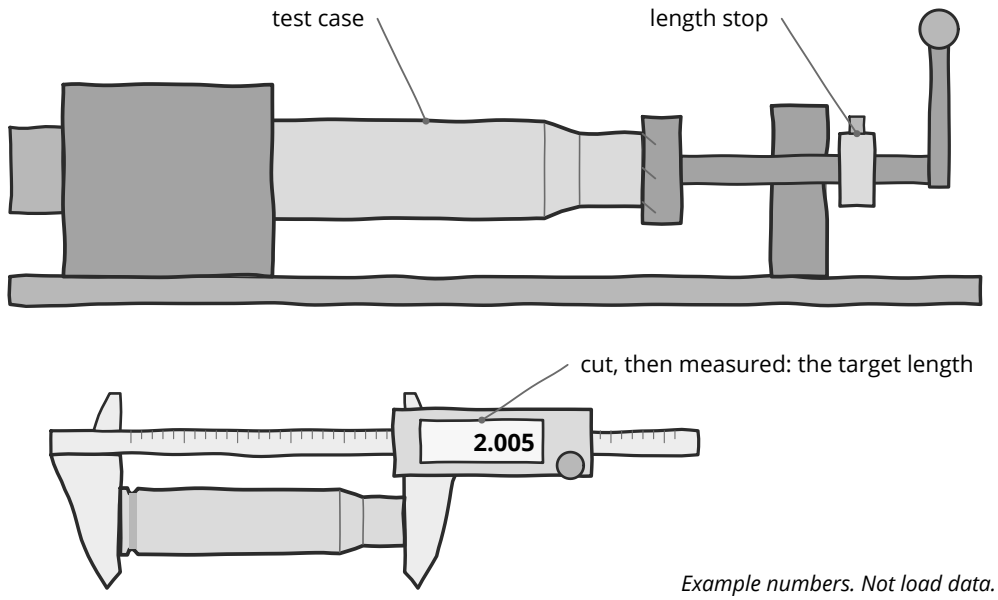

Figure 20-2. Setting a trimmer with a test case.

5. **Trim the batch.** Measure every fifth case. If the length drifts, stop and reset.

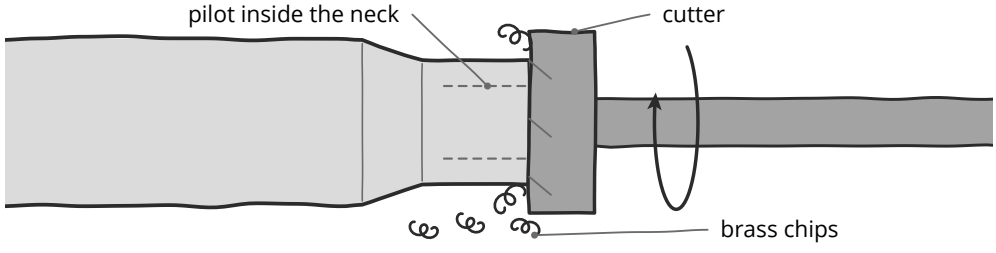

Figure 20-3. Trimming a case.

After trimming, remove any pocket crimps and do any optional pocket work (see Chapter 22). Then give the batch its final clean (see Chapter 18).

Chamfer and deburr

Chamfer and deburr after the final clean (see Chapter 18), just before you prime. Tap each case mouth down to drop the chips.

A 3-in-1 trimmer chamfers and deburrs as it trims, before the final clean. If you use one, check each mouth after the clean, and touch up any that needs it with steps 6 and 7.

6. **Chamfer the inside of the mouth.** Turn the tool a few times with light pressure. Stop when an even bevel shows all the way round. A knife edge is too much (see Figure 20-4). Choose the chamfer angle to suit your bullets (see Chapter 7). Use one tool for the whole batch.

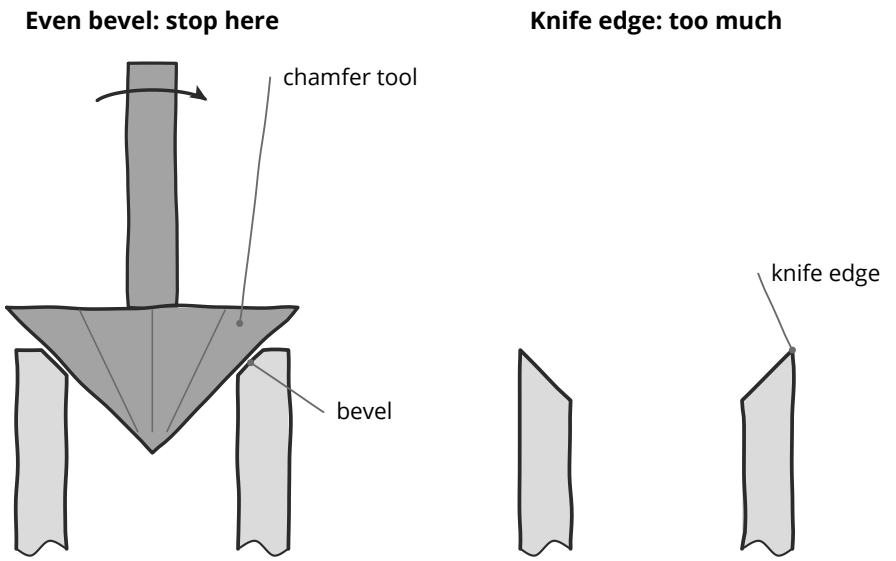

Figure 20-4. Chamfering the inside of the mouth.

7. **Deburr the outside.** Remove the ridge the cutter left (see Figure 20-5). Stop when the edge feels smooth.
8. **Clear the chips and inspect.** Tap the case mouth down and brush the neck. Look at the mouth under light. No chips may stay in the case.

A mouth left without a chamfer can shave the bullet jacket as it seats. It can also need so much seating force that the shoulder crushes (see Chapters 25 and 31).[4]

Flare the mouth for flat-base bullets

A boat-tail bullet guides itself into the case neck. A flat-base bullet has a square heel that sits on top of the case mouth, where it can tip during seating or shave jacket metal on the mouth edge. A slight flare gives a flat-base bullet a smooth lead-in.[5]

9. **Chamfer first, then try a dummy.** An even chamfer is often enough for a jacketed flat-base bullet. Seat a bullet in a sized case with no primer and no powder (see

Chapter 24). If the base enters square and no curl of jacket shows at the mouth, you are done.

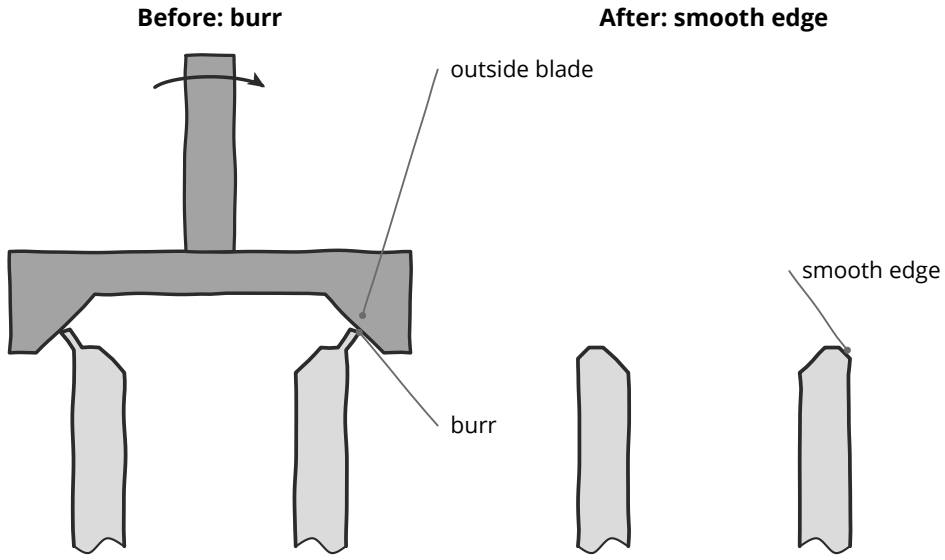

Figure 20-5. Deburring the outside of the mouth.

10. **Flare slightly if the base still catches.** Use a two-step neck expanding die (see Chapter 5). Turn the expander down in small steps until a bullet base just enters the mouth by hand. Flare every case in the batch at the same setting.
11. **Keep the flare small.** Too much flare works the brass and shortens case life. Too little lets the mouth shave the bullet as it seats.[1] A mouth that is still flared after seating can catch as the round chambers. Close it with a taper crimp die set just to touch the mouth (see Chapters 5 and 24).

Track growth and decide when to trim

12. **Log the sized length of each batch.** Measure every case for the first few firings. After that, measure the same 10 cases after each sizing. Compare the averages from firing to firing.

```
Average sized length of 10 cases (inch)
After firing 1    2.0060
After firing 2    2.0085
After firing 3    2.0110
Growth per firing = (2.0110 − 2.0060) ÷ 2 = .0025
Margin left       = (2.0150 − 2.0110) ÷ .0025 = 1.6 firings
Longest of the 10 after firing 3   2.0120
Trim line         = 2.0150 − .0025 = 2.0125
```

Example numbers. Not load data. The average still has room, but the longest cases reach the limit first. The longest case is just under the trim line, so load this batch once more and trim it at the next sizing.

Trim the batch when the longest case in the sample is within one firing's growth of the maximum. Before you load a batch untrimmed, check every case against the maximum. The sample sets when to trim. It does not clear the cases you did not measure.

Write the growth rate on the brass batch's page in your log. If your sizing is steady, the rate should stay steady too. If growth suddenly speeds up, the shoulder may be bumped too far (see Chapter 19).

Common faults

Table 20-1. Trimming and chamfering faults, their likely causes and fixes.

Symptom	Likely cause	Fix
Trimmed lengths vary	The trimmer locates on uneven shoulders, or the case slipped	Trim after sizing. Check the holder.
A ridge remains on the mouth	Deburring was skipped or too light	Deburr again before priming.
The bullet scrapes as it seats	Too little inside chamfer, or a flat base with no lead-in	Set the round aside (see Chapter 25). Chamfer the next batch until an even bevel shows, before priming. For a flat base, flare the mouth slightly (step 10).
The shoulder crushes during seating	A blunt mouth or too much neck tension	Set the round aside. Chamfer the next batch before priming. Check the interference (see Chapter 19).
Cases grow fast	Too much shoulder bump	Check the bump (see Chapter 19).

Chapter 21

Annealing

Key points

- Firing and sizing harden the case neck. A hard neck springs back more and splits sooner.
- Annealing heats the neck and shoulder to soften them. The case head must stay hard.
- Anneal after the coarse clean and the inspection, before lube and sizing. The sizing die then works on brass that is already softened.
- It is very hard to tell whether annealing worked. Temperature-indicating paint and your sizing numbers are indirect checks. Color is not a sign of a successful anneal.
- Annealing extends neck life. A benefit on target is plausible but unproven at large sample sizes.

Why it matters

Brass hardens when it is bent and stretched. This is called work hardening. Each firing expands the neck, and each sizing squeezes it back. After several cycles the neck is harder than it was when new. A harder neck springs back more after sizing. Its grip on the bullet and its shoulder position can vary more from case to case. In time the neck splits.

Annealing heats the neck and shoulder until the worked metal re-forms its grains and softens again. The neck can then bend without cracking. It also responds to sizing more as it did when new.

The case head is different. It holds the case against chamber pressure, so it must stay hard. Never heat the head. Keep the heat in the neck and shoulder (see Figure 21-1). Too much heat also harms the neck, which can end up softer than new. That is why the setup below uses the shortest time that works.



Figure 21-1. Where annealing heat belongs on a case.

How it is done

Do you need to anneal?

Annealing earns its place when neck work hardening is what ends your brass's life. Your workshop log shows why each case was discarded (see Chapter 18). If necks split first, annealing should add firings. If primer pockets loosen first, or heads show the stretch ring first, annealing will not help. It treats only the neck and shoulder.

Some loaders anneal every firing to keep neck hardness the same from one loading to the next. In theory, necks of the same hardness grip the bullet the same way. Velocity should then be more consistent too. In a 2024 survey, 69 percent of top Precision Rifle Series (PRS) shooters annealed.[1] Popularity is not proof (see "Test it on target yourself" below).

When to anneal

Anneal after the coarse clean and the inspection, and before lube and sizing (see Chapter 17). Lube would burn on the case. Sizing after annealing sets your dimensions on brass in its final state.

Choose a schedule, every firing or every few, and keep it. Every case in a brass batch should share the same history. If you start annealing a batch partway through its life, anneal every case in it. A half-annealed batch has two histories.

Safety at the annealer

Safety · See Chapter 2
Anneal empty cases only. Never heat a case that holds a live primer or any powder. Keep powder and primers away from the annealing station. Torches, coils and fresh cases stay hot after use, and a hot case looks like a cold one. Drop hot cases into a metal tray, and keep a fire extinguisher at hand. Molten salt calls for eye, face and hand protection. Water and molten salt must never meet. Water that reaches the pot turns to steam at once and throws molten salt. Dip only clean, dry cases with dry tools, and keep quench water away from the pot.

Set up by measurement

The three methods are flame, induction and molten salt (see Chapter 7). Whatever the method, keep the heat source, distance and case position fixed. Change only the time.

1. **Start with clean, dry cases.** No lube, and no water inside.
2. **Mark a test case with temperature-indicating paint.** Put a 750 °F mark inside the neck.[2] Put a 450 °F mark low on the body, near the head. It catches heat that spreads too far down the case (see Figure 21-2).[3]

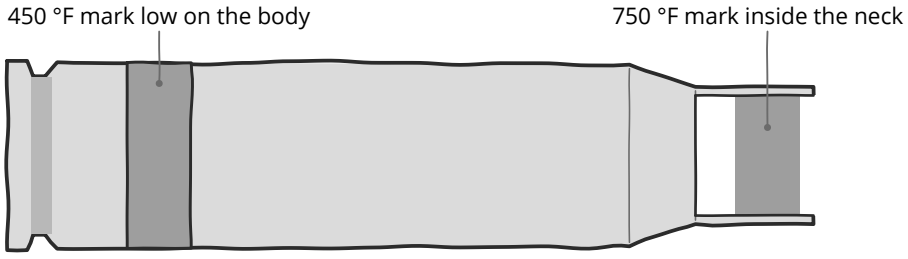

Figure 21-2. A test case marked with two indicator paints.

3. **Run the test case at a short time.** Look at both marks. Raise the time in small steps, with a fresh test case for each step (see Figure 21-3).

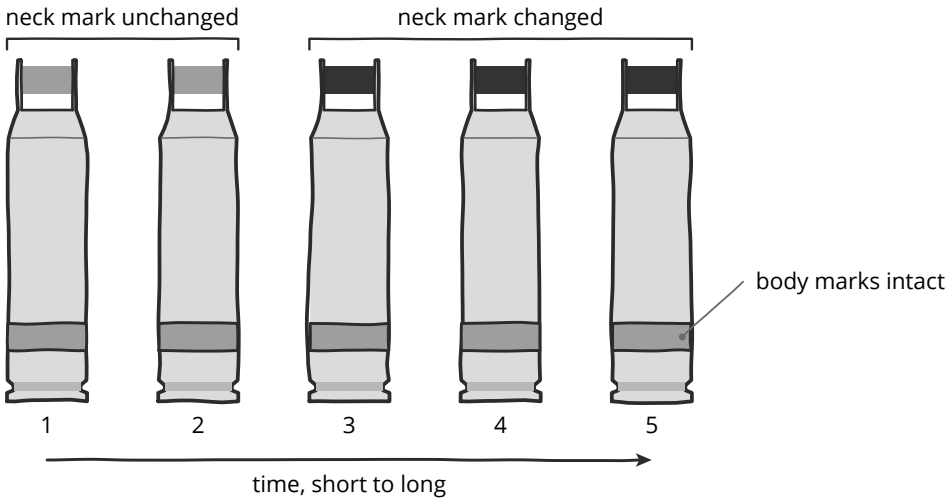

Figure 21-3. Test cases from short to long times in a row.

4. **Stop at the shortest time that changes the neck mark.** The body mark must not change. Write down the time and every setting in your log. Repeat the setup for each new lot or cartridge.
5. **Anneal the batch at that setting.** Keep the case position the same for every case (see Figure 21-4). Scrap any case whose head changed color.

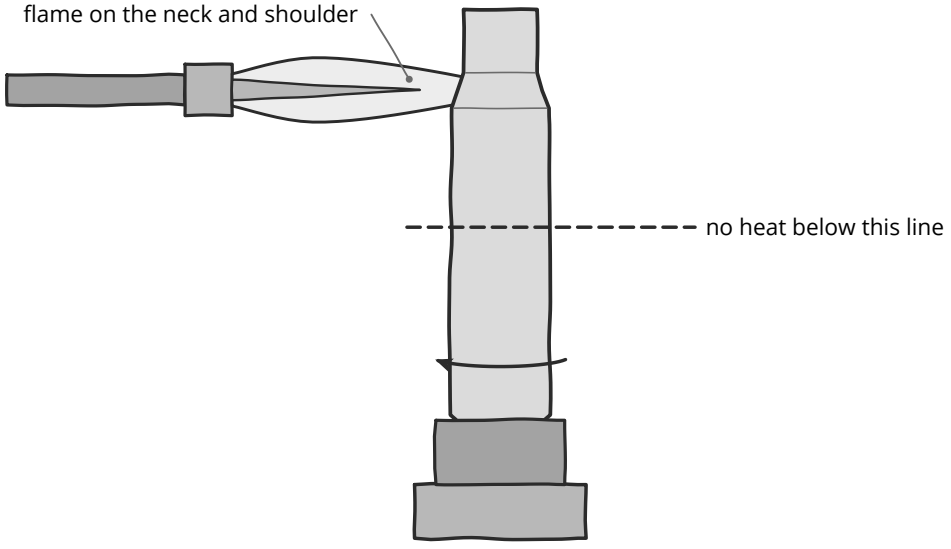

Figure 21-4. A case at the set position in the annealer.

6. **Let the cases cool.** Air cooling and a drop into water both work. Water does not harden brass the way it hardens steel. After a salt bath, wash the salt off the cases in clean water, away from the pot.[4] Dry every quenched or washed case fully (see Chapter 18) before you lube and size it.

Annealed necks often show a band of color. It is not a sign of a successful anneal, so never judge an anneal by its color. Color can only warn of failure. A neck that glows red in a lit room got too hot.[5] If you suspect a batch was overheated, scrap it.

How to tell it worked

Because you cannot see brass hardness directly, use these three indirect checks:

- **Did the neck get hot enough while the body stayed cool?** The indicator test at setup answers this.
- **Does the brass size more evenly?** Size 20 annealed and 20 unannealed cases from the same batch, with one die, one lube and one session. Compare the SD of the sized base-to-shoulder readings, and of the neck diameters, with the F-test on two SDs (see *The Precision Rifle Handbook*, Chapter 16 and Appendix A.8). It needs a comparator that reads to .0005 inch or finer.
- **Do the necks last longer?** Keep a tally of firings and neck splits for each brass batch.

```
Sized base to shoulder, 20 cases each (inch)
Not annealed   highest 1.6300   lowest 1.6280   spread .0020   SD .00060
Annealed       highest 1.6295   lowest 1.6285   spread .0010   SD .00030

F           = (.00060 ÷ .00030)² = 4.0
two-sided p = 2 × F.DIST.RT(4.0, 19, 19) = 0.004
```

Example numbers. Not load data. A p-value this small is strong evidence that the annealed cases size more evenly. Confirm the result on a second batch before you rely on it.

Evidence · Supported by data
Annealing extends neck life. Measured over five firing and sizing cycles, neck hardness climbs with each cycle when the brass is not annealed. After each anneal it drops back to the same low level.[6] Hard necks split, so necks kept soft last longer. That is annealing's main benefit.[7]

Test it on target yourself

Evidence · Plausible but unproven
Annealing improves consistency on target. No large-sample public test shows a gain on target.[8]

7. **Split one batch at random into two halves**, giving each its own brass batch name, and anneal one half while prepping both identically.
8. **Load both halves with one load you already shoot.**
9. **Fire interleaved blocks** at separate aim marks: about 35 shots per half for mean radius, or 50 for velocity SD (see *The Precision Rifle Handbook*, Chapter 16).
10. **Compare mean radius and velocity SD** with the F-test (see *The Precision Rifle Handbook*, Chapter 16 and Appendix A.8), and repeat after several more firings as the unannealed half hardens.

EASIER ON EP · ANALYSIS · STATISTICAL TOOLS
Put the annealed groups in one Analysis queue and the others in a second. Analysis tests the two halves against each other for mean radius and velocity SD.
empiricalprecision.com/analysis?tab=queues

Chapter 22

Primer Pockets and Priming

Key points

- Pocket cleaning, uniforming and flash-hole deburring are optional. None has strong evidence behind it.
- A primer fires most reliably when it sits firmly on the pocket floor, a little below flush.
- Primers are made to fire when crushed, so priming is a job of controlled force.
- A primer stays live until it is fired. An unusable primed case is fired or disposed of, never punched out.

Why it matters

The primer starts the shot (see Figure 12-1). Its flash passes through the flash hole and lights the powder. A primer that sits high or tilted can misfire. It can also make the action hard to close.

Primers are the most sensitive part of the cartridge. They are designed to detonate when crushed.[1] So priming is a job of controlled force.

Pocket preparation is a separate question. Cleaning, uniforming and deburring are popular with precision loaders. Here is how to do each one in full. Then weigh what the evidence shows.

How it is done

Pocket work and priming happen at two different points in case prep. Remove any pocket crimp and do any optional pocket work after you trim (see Chapter 20) and before the final clean (see Chapter 18). The final clean then washes out the chips. Prime after the final clean and after you chamfer and deburr the mouth (see Chapter 20).

Set up for priming

Follow the workshop safety rules from Chapter 2. Wear eye protection, work over a hard bare floor and keep only one primer type on the workbench at a time.[2] Keep primers in their factory trays until you seat them. Handle them with clean, dry hands. Return unused ones to storage when you finish.[3]

Check the pocket before you prime

A Berdan case has two small offset flash holes instead of one central hole. A standard decapping pin breaks on it, which is why you sorted out Berdan and steel cases before depriming (see Chapter 18).[1] Next, check whether the pocket is ready to take a fresh primer.

Look for a primer pocket crimp. Many military cases have a swaged ring or stab marks that hold the primer in place.[4] A fresh primer cannot seat past an intact crimp without crushing. Remove the crimp after trimming and before the final clean, as described below.

Removing a pocket crimp

A crimp comes out once. After that the pocket behaves like any other. Swage the crimp back into the pocket wall or cut it away with a reamer (see Chapter 7 for the tools). Cutting removes brass, so take care not to over-ream.[4]

1. **Start with decapped cases.** Every batch was deprimed at the start of case prep (see Chapter 18). The crimp is easier to see with the old primer out.[4]
2. **Set up the tool as its maker directs.** A cutter needs its depth set to remove the crimp and no more.
3. **Do one case and look.** The ring or the stab marks should be gone. The pocket mouth should be smooth and even all the way round.
4. **Prime that case.** Finish any other pocket work on it first, then seat a primer as described in "Seat the primer" below. Priming should feel normal.[4] Because a primed case cannot go through the final clean, put a good test case in the "Primed. No powder. Fire before decapping." container (see "When a primer goes wrong" below). If the primer still feels crunchy or too tight, stop and do not force it. Put that partly primed case in the "Primed. Do not chamber. Dispose." container. Set the tool to remove a little more crimp and test the next case.
5. **Scrap any case whose primer goes in too easily.** An over-cut pocket may not support the primer, which can cause damage or injury when fired.[4] Put that case in the "Primed. Do not chamber. Dispose." container and test the next case.
6. **Run the batch.** Keep the finished cases in their own marked box.

Military brass also varies by headstamp in weight and capacity, so a change of headstamp is a change of component.[4] Sort it by headstamp (see Chapter 18) and work up again for each one (see Chapter 28).

Optional pocket work

Keep notes on which cases had each job, so a later test can compare like with like.

Clean the pocket. Spent primers leave carbon fouling on the pocket floor. If heavy carbon stops a new primer from seating fully, remove the carbon with a primer pocket brush or scraper (see Chapter 7).

Uniform the pocket. Uniforming squares the pocket floor and brings every pocket to one depth. Cut each pocket with a uniforming tool until the tool reaches its stop (see Chapter 7 and Figure 22-1). Every primer then seats against the same floor. Uniform once, after any pocket crimp is removed. After that, the pocket needs only cleaning.

Deburr the flash hole. Punched flash holes often leave a burr inside the case (see Figure 22-2). Trim the burr flush with a flash-hole deburring tool (see Chapter 7). Never enlarge the flash hole. A larger hole speeds the primer flame and can spike pressure unpredictably.[5]

Uniforming and deburring leave chips in the case. The final clean takes them off before you prime (see Chapter 18).

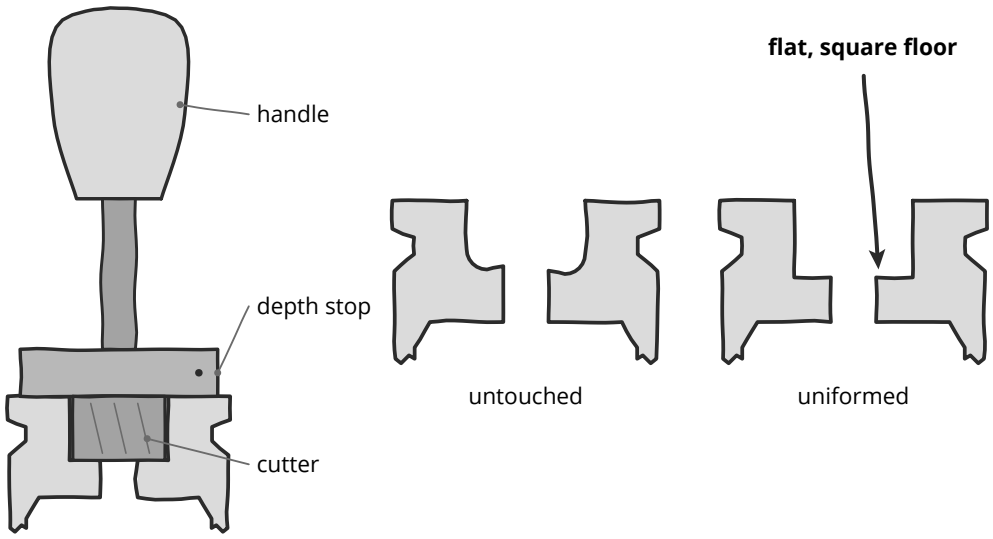

Figure 22-1. A pocket uniforming cutter at work, and a uniformed pocket beside an untouched one.

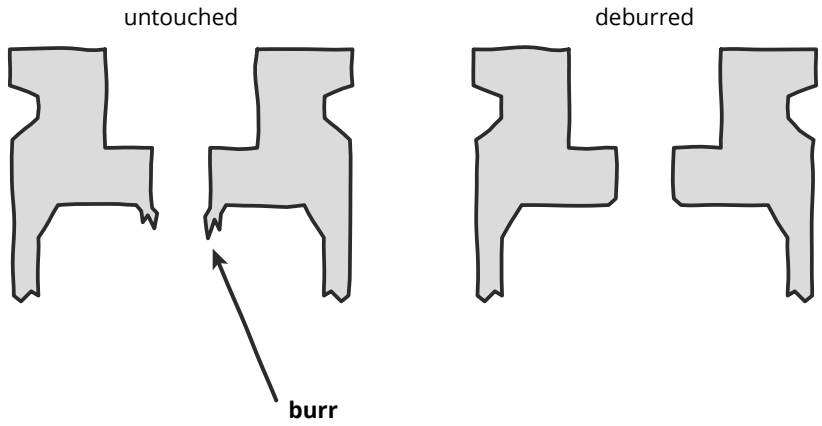

Figure 22-2. Two sectioned cases. One flash hole still has its burr. The other has been deburred.

Contested: pocket prep gives more uniform ignition

The claim. Clean, uniform pockets and deburred flash holes give more uniform ignition and so less velocity spread.

The physics. The primer's flame passes through the flash hole, and a burr can partly block it. A pocket of one depth lets every primer seat the same way. Both effects are real. Their size is the question.

The test. Split one lot of brass. Prepare half and leave half alone. Load both halves the same way. Fire them in interleaved blocks until each half has about 35 shots for mean radius, or about 50 for velocity SD. Those counts detect a 1.5 to 1 difference 8 times in 10. A 1.25 to 1 difference needs about 110 and 160 (see *The Precision Rifle Handbook*).

The data. Controlled evidence is thin and mixed. In one test series, deburring reduced velocity spread on punched flash holes but not on drilled ones.[6] In one test program, heavy case prep on brass from a single lot gave no group benefit.[7]

The verdict. Plausible but unproven. Optional: do it if you enjoy it or if your own test shows a gain.

Seat the primer

1. **Use the primer your load data names.** A primer other than the one tested can raise pressure dramatically.[1] In percentage terms, changing the powder charge moves pressure about 3 times as much as velocity. Swapping the primer can move pressure 10 times as much as velocity, or more (see Chapter 12).[8]
2. **Turn the primers anvil up.** Scatter them on a grooved flip tray. Shake it gently side to side until every primer lies anvil up.[9] Fill the hand tool or the press arm from the tray (see Chapter 7 for the tools). Touch primers with your fingers as little as you can. On a progressive press, take special care when you fill and handle primer feed tubes.[10]

> **Safety · See Chapter 2**
> Seat every primer fully, so it sits slightly below flush.[1] A primer that stands proud can make the action hard to close and can misfire.

3. **Seat with one steady stroke.** Push the primer to the bottom of the pocket and feel it stop. A primer seated firmly on the pocket floor gives the best sensitivity.[9] Use the same smooth stroke on every case.
4. **Stop at unusual resistance.** Stop if a primer will not start, feels crunchy or needs more force than the cases before it. Find out why before you go on.[1] Look for a crimped pocket, a tilted primer or carbon on the pocket floor (see Chapter 31 for other causes). Never force a primer.[10]
5. **Check every case by touch.** Run a fingertip across the case head. A primer below flush feels like a shallow dip. A high or upside-down primer catches your finger. You can also stand the case on its head on a hard, flat surface. A high primer makes it rock (see Figure 22-3). A primer seating depth gauge gives a number if you want one (see Chapter 9). Primers and pockets are designed for the best sensitivity at .003 to .005 inch below flush.[11] The industry standard for factory ammunition allows flush to .008 inch below.[12] If a primer sits high, reseat it with the same steady stroke, stopping at any unusual resistance. Never push on a tipped or upside-down primer. If a primer stays high, tipped or upside down, put the case in the “Primed. Do not chamber. Dispose.” container (see “When a primer goes wrong” below).

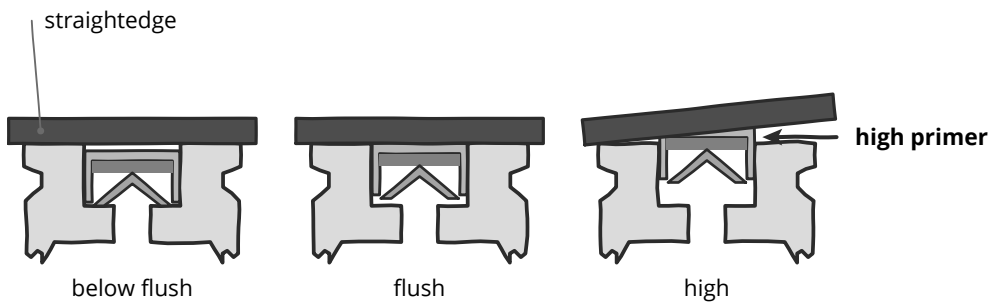

Figure 22-3. Three case heads against a straightedge. One primer below flush, one flush and one high.

6. **Cull loose pockets.** If a primer slides in with almost no resistance, the pocket is loose. Discard cases with enlarged primer pockets.[5] Because the case now holds a live primer in an unsafe pocket, put it in the "Primed. Do not chamber. Dispose." container (see "When a primer goes wrong" below). Track how many you find in the batch. Several loose pockets after only a few firings mean the pressure is too high. Reduce the charge and set your maximum below that load (see Chapter 28).

When a primer goes wrong

Never pry a seated primer loose. Never punch out a live primer in a reloading die. Sort primed reject cases into two labeled containers by where the primer sits, and keep both apart from your primer supply. If you are unsure which container a case belongs in, use the second.

- **Primer below flush.** Use a container labeled "Primed. No powder. Fire before decapping." Fire each empty case in the rifle at the range, then decap it normally.[2]
- **Primer high, sideways, upside down or deformed.** Use a container labeled "Primed. Do not chamber. Dispose." Never chamber these cases, because closing the bolt can fire the primer before the bolt locks.[13] Dispose of them as the primer maker's published guidance directs.

Pick up dropped primers at once. One underfoot can fire. Return clean, undamaged primers to their original packaging. Do not seat a dented, gritty or oily primer. Never load a primer you cannot identify. Dispose of it, like a damaged primer, as a primer maker's published guidance directs.[10]

Chapter 23

Charging

Key points

- A charge is only as accurate as the scale that weighed it, and a scale is trustworthy only at the weights you check.
- A finer scale pays off only when charge errors make up a meaningful share of your velocity spread.
- You cannot see a charging mistake after seating the bullet, so inspect every charged case while it is still open.
- Case fill matters at both ends. A low-fill load can hide a double charge. A compressed load can push its bullet out over time.
- Mixed powders cannot be seen, so a session starts and ends with an empty measure.

Why it matters

Charging is the step where a small slip becomes a dangerous one. A wrong powder, a double charge and a missing charge all look the same from outside a loaded round. Each one can wreck a rifle or hurt the shooter.

The charge also sets velocity. Random errors in the charge add to the spread of your velocities. How much they add depends on your load, your scale and your method. Here is how to work that out.

How it is done

Set up the workbench

1. **Put one powder on the workbench.** Read the label. Confirm that it matches your load data exactly.[1] For a work-up, plan it first: the step charges, the two limits and the rounds per step (see Chapter 16, “Plan the work-up”).
2. **Make sure the measure is empty before you fill it.** Fast powder left in a measure from the last session is a hidden danger. It can be thrown first and then covered by the right powder. Nothing looks wrong from above.[1] Look into the hopper to check that it is empty (see Figure 23-1). Then pour in only the powder you need for this session.

Verify the scale

> **Safety · See Chapter 2**
> A scale that reads low makes every charge heavy. Confirm that the scale balances at zero before you charge.[1]

3. **Set the scale on a solid, level surface.** Keep it away from drafts, fans and vibration (see Chapter 8). Let an electronic scale warm up and calibrate it as its maker directs.
4. **Zero it with the empty pan.** A beam scale must balance at zero with the empty pan.[1] An electronic scale should read zero with the pan in place.

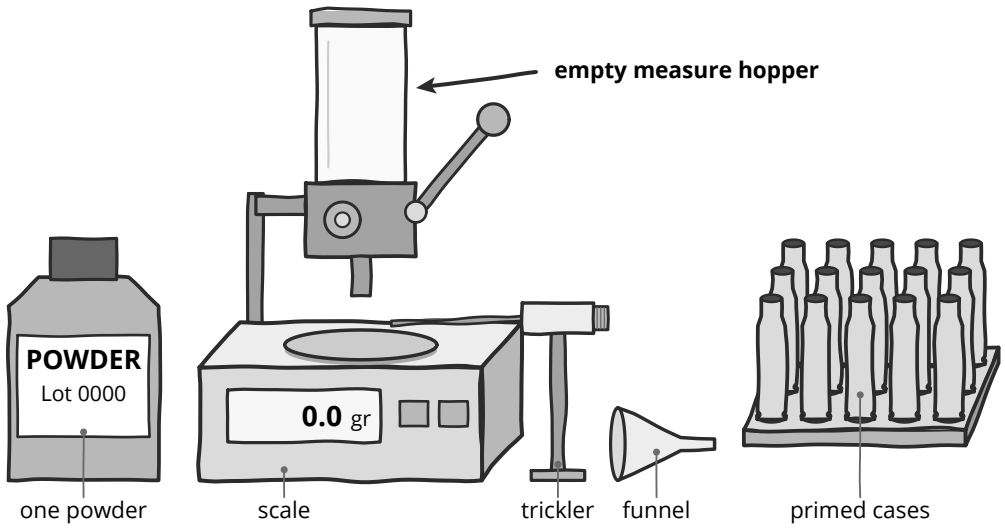

Figure 23-1. A workbench ready for charging, with one powder container, an empty measure, a scale, a trickler, a funnel and a block of primed cases.

5. **Weigh check weights near your charge weight.** A scale can read true at one weight and wrong at another, so check it where you will use it (see Chapter 8). Write down each reading.
6. **Hold the scale to a tolerance set in advance.** Use one display step. If a reading is off by more, calibrate and check again. If it is still off, stop. Do not load with that scale.
7. **Check it again later.** Repeat the zero and one check weight partway through a long session and again at the end.

Check weights are often marked in grams. Convert with this formula.

```
grains = grams × 15.432
```

Worked example. Example numbers. Not load data. A 5 gram check weight weighs 5 × 15.432 = 77.16 gr. A scale that shows tenths of a grain should read 77.2 gr. A reading of 77.1 or 77.3 is within one display step. A reading of 77.5 is not, so calibrate and check again.

Throw, trickle or dispense

8. **Make each charge one of three ways.**
   - *Throw.* Throw the charge from a volumetric measure (see Chapter 8). Set the measure with your scale. Throw several charges to settle the powder and return them to the hopper. Weigh every charge until several in a row show the weight you want. Work the handle the same way every time.
   - *Trickle.* Throw or spoon a charge slightly light into the scale pan. Then add powder with a trickler until the scale reads your target (see Chapter 8). A small spoon helps with overfills.[1]
   - *Dispense.* Set an electronic dispenser to your target weight and let it finish the charge (see Chapter 8). Treat its scale like any other and check it with check weights

before you start. If a charge overshoots, pour it back into the hopper and dispense it again.

9. **Weigh every charge for a work-up or a precision load.** Thrown charges vary with the powder, the measure and your rhythm. Weigh each one on the checked scale. For practice loads from a measure that throws within your tolerance, check-weigh about every 10th charge.[2]

Evidence · Plausible but unproven
Charge errors affect velocity, but large-sample tests have not settled how fine a scale you need. Live-fire tests have compared thrown charges with scales resolving from about 0.1 gr down to about 0.02 gr (roughly one kernel of stick powder).[3] Finer weighing alone did not always lower velocity SD, and ignition consistency can matter more.[4] Detecting a 1.25 to 1 difference in velocity SD takes about 160 shots per load (see *The Precision Rifle Handbook*).

What a charge error costs

You can estimate the cost for your own load from two numbers. The first is how much velocity the load gains per grain. Work it out from the published start and maximum loads for your exact components.

```
fps per grain = (max fps − start fps) ÷ (max charge − start charge)
```

The second is how much your charges vary. For thrown charges, throw 20, weigh each one and find their SD (see *The Precision Rifle Handbook*). For charges weighed on a scale that shows tenths, the display hides up to about 0.05 gr either way. Spread evenly, that is an SD of about 0.03 gr.

Independent sources of spread add as squares. The same rule applies to chronograph error.[5]

```
velocity SD from charges = fps per grain × charge SD
total SD = √(other SD² + velocity SD from charges²)
```

Worked example. Example numbers. Not load data. Say your load gains 50 fps per grain, and everything except the charge gives a base velocity SD of 10 fps. Weighed charges (0.1 gr scale, 0.03 gr SD, adding 1.5 fps) raise total SD to $\sqrt{(10^2 + 1.5^2)} = 10.1$ fps. Thrown charges (0.1 gr SD, adding 5.0 fps) raise it to $\sqrt{(10^2 + 5^2)} = 11.2$ fps. Repeat the math at a 5 fps base SD (such as a tuned F-Open load): a 0.02 gr scale (0.01 gr SD, +0.5 fps) gives 5.0 fps total, a 0.1 gr scale (0.03 gr SD, +1.5 fps) gives 5.2 fps, and thrown charges (0.1 gr SD, +5.0 fps) give 7.1 fps. Even at a 5 fps base SD, thrown charges hurt noticeably, while moving from a 0.1 gr to a 0.02 gr scale removes only about 0.2 fps. Work out your own numbers before buying a finer scale.

EASIER ON EP · BURN CHART · POWDER OPTIMIZER
The Powder Optimizer predicts how much velocity each powder loses with 0.1 gr less, for your cartridge, bullet and barrel. Ten times that is the fps per grain above. Like every prediction, it is for learning.
empiricalprecision.com/loads?tab=optimizer

Charge the cases

> **Safety · See Chapter 2**
> A missing or short charge can lodge a bullet in the bore. The next shot can then cause a catastrophic failure. A double charge can hide in a low-fill load, so take extreme care with any load that fills less than half the case.[1]

10. **Pour each charge through a funnel that fits the case mouth.** Tap the funnel so no kernels hang up in it. A full-case or compressed charge can bridge in the funnel or neck. Pour slowly and tap the case, or use a drop tube (see Chapter 8). If a published charge still will not fit, something differs from the test (see Chapter 31).
11. **Work in a fixed order.** Set the seating die on a dummy round before you charge the first case (see Chapter 24). Then choose one of two workflows and keep to it.
    - *Batch.* Charge every case in order, moving each one from the empty side to the charged side of the block as you go. Inspect them all under the light. Then seat the bullets.[1]
    - *One at a time.* Weigh and pour one charge, then look inside and compare the powder level with a reference case (an unprimed, marked case holding your target charge). Seat the bullet right away before charging the next case. No charged case sits waiting on the workbench.

Inspect every case under light

12. **Shine a bright light into every charged case.** Look at the powder level and compare it with the cases around it.[6] If a case looks low, high or empty, dump it and recharge it.

Know your case fill

Case fill is the poured charge as a share of usable capacity (see Chapter 13). To check by hand whether the bullet will compress the charge, charge a primed case the way you will charge the batch (tapping only if you will tap the batch) and measure from the case mouth down to the powder with a caliper depth rod. If the powder stands higher than the bullet's seated depth (see Chapter 13), the bullet will compress the charge. Follow published compressed-charge flags, and check CBTO on stored compressed rounds before shooting (see Chapters 13 and 25).

Close the session

13. **Return unused powder to its original container.** That includes the reference case's charge. Powder left in a measure absorbs moisture, changing burn rate (see Chapter 13), and risks mix-ups.[1] Dispose of any doubtful powder (see Chapter 2).
14. **Empty the measure completely.** Check that the hopper is visibly empty (see step 2).
15. **Clean up spills with a brush and dustpan.** Never use a vacuum.[7]

Seating

Key points

- CBTO tracks the distance to the lands and COAL does not. COAL still matters for the magazine and for published data.
- Land readings depend on technique, so only one method used the same way gives numbers you can compare.
- Seating deeper, or into the lands, raises pressure. Monolithic bullets need jump.
- The magazine caps the length of rounds fed from it, and the bullet must sit at least one caliber deep.
- The lands move as the throat wears, and seating effects shrink in large samples. A jump that forgives both beats one you must chase.

Why it matters

Seating sets three things at once. It sets where the bullet starts relative to the rifling, how much room the powder has and whether the round fits the magazine.

Room for powder is a pressure question. Seating deeper takes space from the powder, so pressure and velocity rise. Even .030 inch deeper on a near-maximum load is a real and often underestimated pressure step.[1]

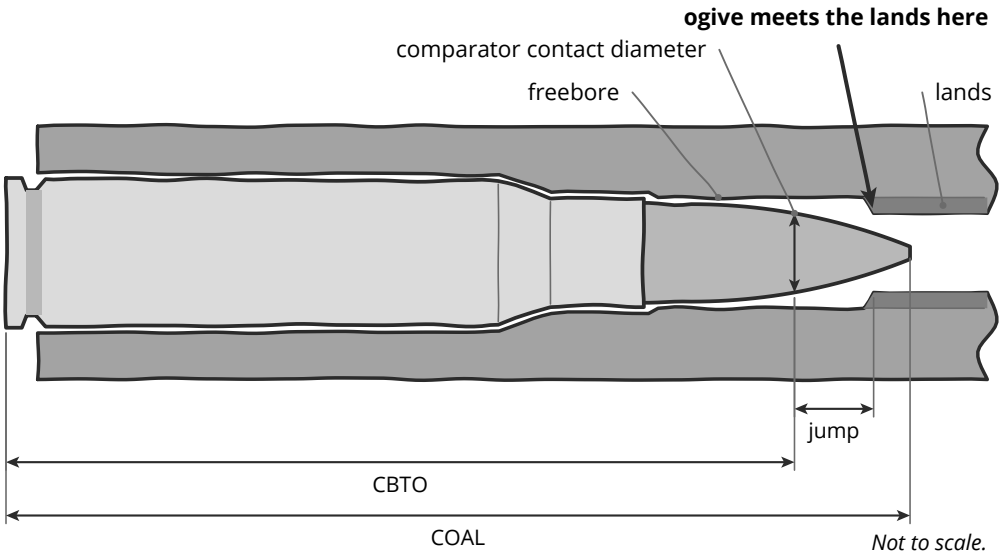

Figure 24-1. A loaded round in a chamber. Labels show COAL to the tip, CBTO to a point on the ogive, the comparator contact diameter, the freebore, the lands and the jump.

Distance to the rifling is a precision question until the bullet touches the lands. Then it becomes a pressure question too. Here is the full method for seating to your own chamber.

How it is done

COAL and CBTO

COAL is the cartridge overall length, from the base to the bullet's tip. Tips vary from bullet to bullet, even in one box. So two rounds with the same COAL can sit at different distances from the lands.

CBTO is the cartridge base to ogive. A bullet comparator on your caliper reads it at a fixed diameter on the ogive, near where the bullet meets the lands (see Chapter 9 and Figure 24-2). So CBTO tracks the jump and COAL does not. Use CBTO, never COAL, for seating tests.[2] Always use the same comparator insert and write down which one. A different insert gives a different number. Measure with bullets from the lot you will load.

COAL still matters. The magazine limits it, published data lists it and the SAAMI maximum is written as a COAL. Record both numbers.

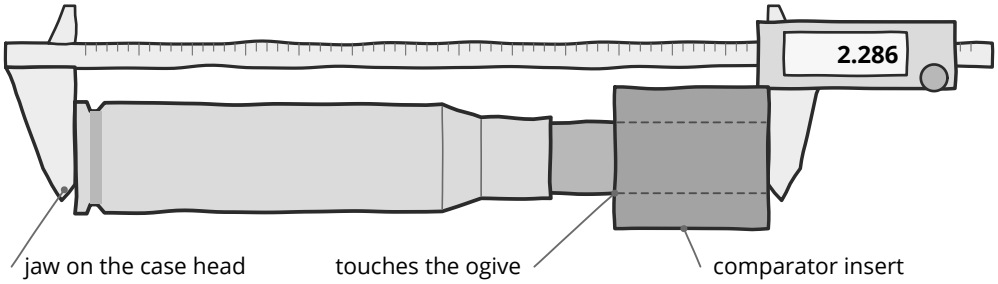

Example numbers. Not load data.

Figure 24-2. A caliper with a comparator insert measuring CBTO on a loaded round.

Measure the lands with one method

Land measurement depends on technique.[3] Pick one method and keep it. Measure five times, then record the average and the spread.

> **Safety · See Chapter 2**
> Before any gauge or dummy round goes into the rifle, here or in Chapter 26, unload the rifle and empty the magazine. Keep live rounds off the workbench and the muzzle in a safe direction.

Method A. The modified-case gauge.

1. Fit a modified case for your cartridge to the gauge (see Chapter 9). Drop a bullet from your loading lot into its mouth.
2. With the bolt out, insert the gauge into the chamber (see Figure 24-3). Push the rod gently until the bullet stops against the lands. Use the same light push every time.
3. Lock the rod, withdraw the gauge without disturbing the bullet and measure CBTO.

Method B. The lands-gauge dummy.

1. Use a sized case with no primer and no powder. Open its neck slightly, until a bullet slides in under firm finger pressure. An expander mandrel does this. Mark the case

plainly as a lands-gauge dummy, so it can never pass for a live round, and keep it for the next measurement.

2. Seat a bullet long in it. The light neck grip lets the lands push the bullet back.
3. Chamber the dummy and close the bolt gently. Extract it gently and measure CBTO (see Figure 24-4). Repeat until the reading stops changing.
4. If a bullet sticks in the lands, push it out from the muzzle with a cleaning rod before you do anything else.

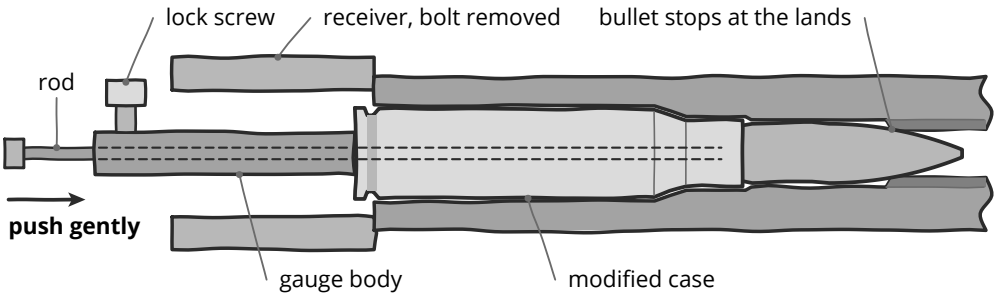

Figure 24-3. A modified-case gauge in a bolt-action chamber with the bolt removed.

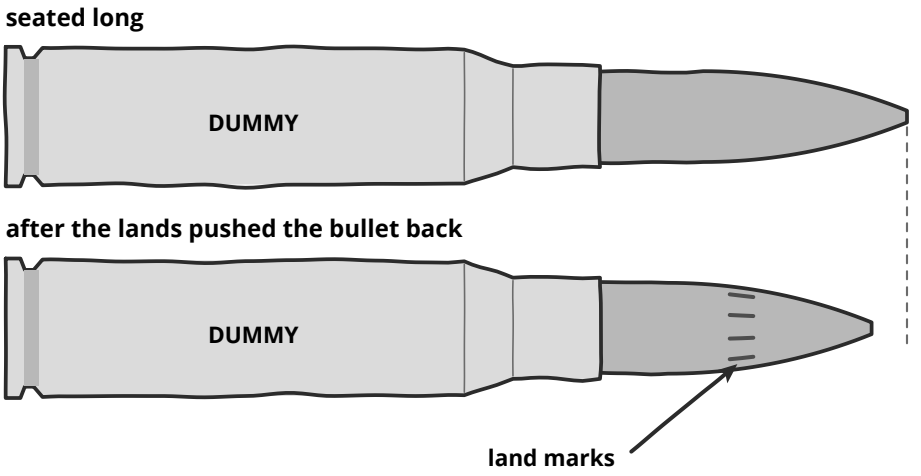

Figure 24-4. A marked lands-gauge dummy with the bullet seated long, beside the same dummy after the lands pushed the bullet back.

Record the bullet, method, comparator, average, spread, date and barrel round count. The lands move, so this number has a date on it.

Jump and jam

Jump is the distance the bullet travels before its ogive meets the lands. Jam means the ogive touches or presses into the lands when the round is chambered.

```
jump = CBTO at the lands − CBTO of your round
```

A jump of zero or less is jam (see Figure 24-5). Jam raises pressure. A jammed round has a second hazard. If you open the bolt without firing, the bullet can stay in the lands while the case comes out. Powder then spills into the action. That is one reason not to jam a hunting load.

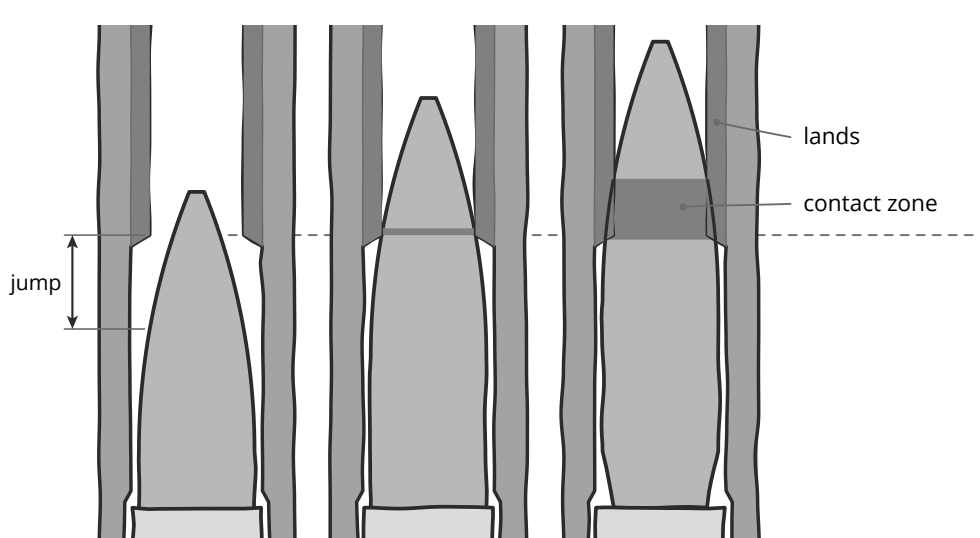

Figure 24-5. Three rounds against the same lands: one with jump, one touching and one jammed.

> **Safety · See Chapter 2**
> Seating into the lands raises pressure.[4] Treat any move to jam as a new load. Work the charge up again from the published start load at the seating you will shoot (see Chapter 28).

The limits on length

The lands set one limit on length. Four others matter too.

The magazine. Your magazine length is the longest round your magazine feeds and cycles every time, found with dummy rounds (see Chapter 3). It can be shorter than the published SAAMI maximum. It is a hard ceiling for any round fed from the magazine, no matter how much freebore the chamber has. Rounds you load singly by hand are not bound by magazine length. Highpower service rifle shooters single-load long rounds this way during slow-fire stages (see Chapter 3).

The SAAMI maximum COAL. The SAAMI maximum is a ceiling that lets factory ammunition fit every rifle of the cartridge. It is not a measurement of your chamber. A round loaded past it to reach deep lands may chamber in your rifle and fail to fit others. Keep such ammunition for the one rifle it was built for.

The published COAL. Seating a bullet shorter than the published COAL, or deeper than in your work-up, leaves less room for the powder. Treat it as a new load and work up again (see Chapter 28).

One caliber in the case. Seat the bullet at least one caliber deep, measured from the case mouth to the bullet base (see Figure 24-6). For example, seat a .308 inch bullet at least .308 inch deep.

```
seated depth = bullet length − (COAL − case length)
calibers     = seated depth ÷ bullet diameter
```

Worked example. Example numbers. Not load data. A bullet 1.250 inch long is loaded to a COAL of 2.800 inch in a case 1.920 inch long. Seated depth = 1.250 − (2.800 − 1.920) = .370 inch. For a .264 inch bullet that is .370 ÷ .264 = 1.4 calibers, so it passes.

Evidence · Plausible but unproven
The one-caliber rule is a long-standing convention. No known large-sample test sets the limit.

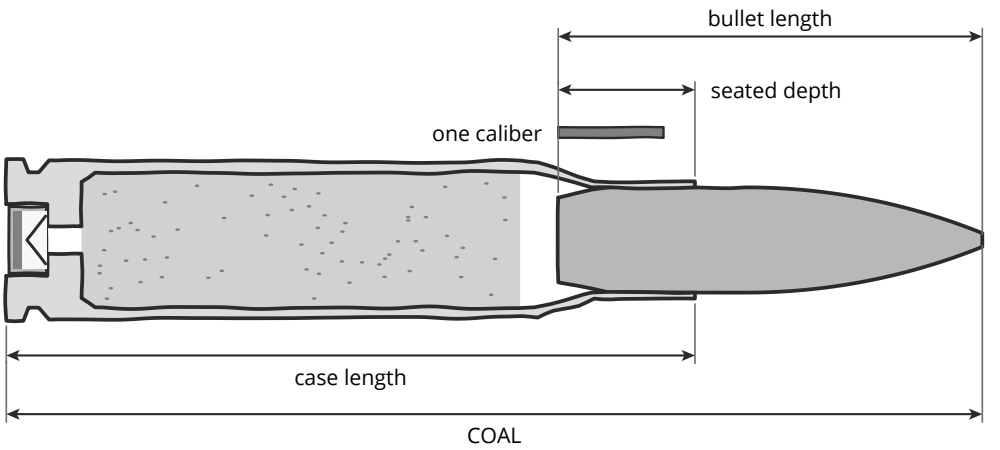

Figure 24-6. A bullet seated in a case, with the seated depth dimensioned and a bar showing one caliber.

The lands move

Every shot wears the throat, so the lands move forward and the jump grows (see Chapter 30). Measurements in 6 and 6.5 mm barrels show about .004 to .007 inch of land movement per 100 rounds (see Figure 24-7).[3] Other calibers wear at their own rates, so measure yours rather than assume it.

Re-measure the lands every 100 to 200 rounds and before any seating test. Better still, choose a jump that needs no chasing. If a load shoots the same across a band of jump, erosion matters little.[3]

EASIER ON EP · FIREARMS · RIFLE PROFILES
Firearms keeps a lands log for each rifle and bullet. Add each sitting's readings and it gives the average, the spread and how far the lands have moved per 100 rounds. It also gives the jump of each saved load measured with the same comparator.
empiricalprecision.com/firearms

Seating depth for your own chamber, step by step

1. **Measure the lands with your one method.** Record the CBTO at the lands.

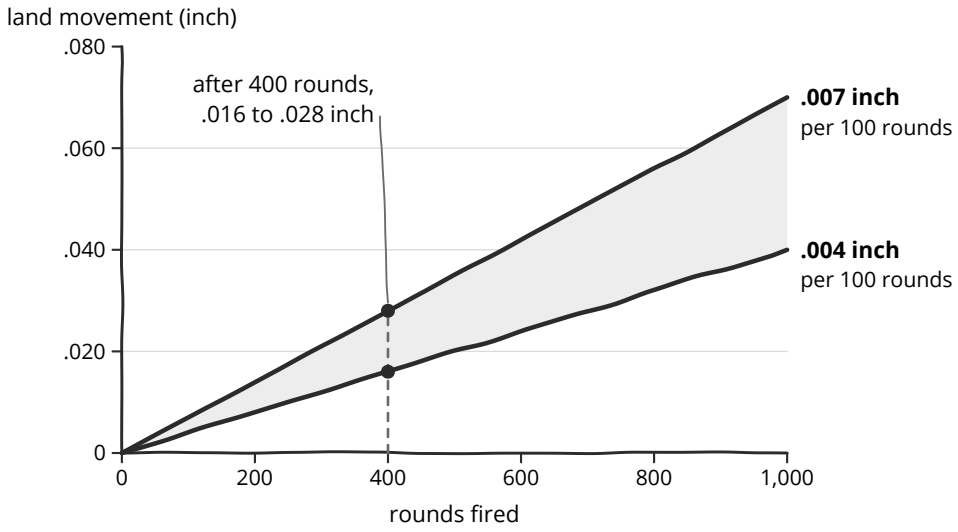

Figure 24-7. Land movement against rounds fired, shown as a band from .004 to .007 inch per 100 rounds, out to 1,000 rounds, as measured in 6 and 6.5 mm barrels.[3]

Safety · See Chapter 2
Monolithic copper bullets need their own data and more jump. They are longer, with more bearing surface, so a lead-core start load can exceed a copper maximum. Start at least .050 inch off the lands to keep pressure down.[5] Work up again before you seat deeper than your worked-up seating.

2. **Start with the bullet maker's guidance.** Each maker knows its designs. For example, one maker starts its hybrid bullets .015 inch off the lands because of their ogive shape (see Chapter 14).[2] If the maker lists no starting jump, build a marked dummy round (steps 5 and 6) to the published COAL, or to your magazine length if that is shorter. Subtract the dummy's CBTO from the CBTO at the lands (step 1) to find the jump. If the jump is zero or less, the bullet is touching the lands. Seat it deeper until the jump exceeds the spread of your land measurements.
3. **Note the published COAL for your exact bullet.** You will compare your round with it in step 7.
4. **Work out the target CBTO.** Subtract the jump you chose from the CBTO at the lands.
5. **Set the seating die.** With a case at the top of the stroke, turn the die down until it touches the case mouth (see Figure 24-8). Back it out half a turn to a full turn, so its crimp shoulder clears the mouth.[6] Lock the die. A competition die with a sliding sleeve has no crimp shoulder, so set its body as its maker directs (see Chapter 5).
6. **Build a dummy at the target CBTO.** Use a sized case with no primer and no powder, and mark it. Start with the stem backed out so the bullet seats long.[7] Seat, measure and turn the stem down a little until you reach the target. Then lock the stem. With a micrometer top, note the dial reading at the target CBTO and record it with the load. A stem that fits the bullet's ogive pushes on the ogive, not the tip (see Chapter 5 for stem types).
7. **Check the dummy against every limit.** Confirm that the bullet sits at least one caliber deep. For magazine-fed rounds, the magazine length is a hard limit: if the dummy is

too long, seat the bullet deeper. Remember that seating shorter than the published COAL reduces powder space and raises pressure. Whatever length you settle on, start your charge work-up from the published start load at that seating depth (see Chapter 28).

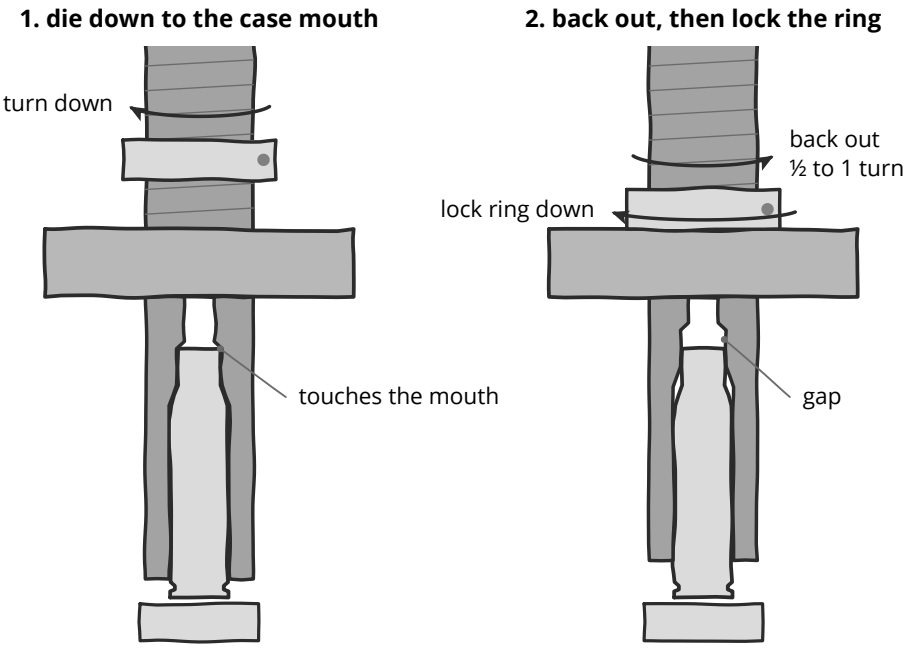

Figure 24-8. Setting the seating die: the die body touching the case mouth, then the lock ring set after backing it out.

8. **Check the dummy in the rifle.** It should chamber without force. If the round will feed from the magazine, the dummy should feed from it too. Keep it as your reference round.
9. **Seat the batch.** Measure CBTO on every round or a sample (see Figure 24-2), and record the average and the spread. Measure COAL on the batch too. Tips vary (see Chapter 9). So for rounds fed from the magazine, the longest round in the batch must fit it, not just the dummy.

```
target CBTO = CBTO at the lands − chosen jump
```

Worked example. Example numbers. Not load data. Five land readings with comparator A average 2.252 inch, with a spread from 2.250 to 2.254 inch. The bullet maker suggests starting .015 inch off. Target CBTO = 2.252 − .015 = 2.237 inch. The dummy's COAL is 2.810 inch, but the magazine length is 2.800 inch. The magazine wins. Seat .015 inch deeper, to leave some room for tips that run long. CBTO becomes 2.222 inch, the jump becomes .030 inch and the dummy's COAL becomes 2.795 inch. Tips can vary by .005 to .012 inch (see Chapter 9), so check the longest COAL in the batch against 2.800 inch.

Testing seating depth

Small-sample seating nodes rarely repeat.[8] To detect a 1.5 to 1 group-size difference, two jumps need about 35 shots each. Three, four and five arms need about 45, 55 and 60 shots per arm (about 67, 77 and 84 for velocity SD; see *The Precision Rifle Handbook*, Chapter 16). Secant-ogive bullets can be sensitive to depth, while hybrids are much less so

(see Chapters 14 and 29). Test jump in interleaved blocks (see Chapter 29 and *The Precision Rifle Handbook*), and test monolithic copper bullets in .025 inch steps.[5] Any jump deeper than your worked-up seating, or into the lands, is a new load that must be worked up from the published start load (see Chapter 28).

Crimping

Bolt-action bottleneck loads rarely need a crimp; neck grip holds the bullet.[4] Four cases call for one.

- **A tubular magazine.** Keeps bullets from being pushed back into their cases.[4]
- **Heavy recoil.** Heavy bullets of .375 caliber and up, and the largest magnums.[9]
- **A semi-automatic action.** When a setback test shows bullet movement or the rifle maker calls for it (see Chapter 26).[10]
- **A flared mouth.** Close any remaining flare on a flat-base bullet with a taper crimp die set just to touch (see Chapter 20).

A roll crimp needs a bullet cannelure or crimp groove at the case mouth.[6] If your CBTO misses the cannelure, seat to it and work up again (see Chapter 28), or use a collet crimp, which needs none (see Chapter 5). Work up with the crimp you will use and keep the setting fixed.

If you crimp, trim the cases to one length first so each gets the same crimp (see Chapter 20). For a roll crimp in the seating die, follow this order.[4]

1. Seat the bullet to depth. Back the seater stem out several turns so it cannot seat the bullet deeper.
2. Turn the die body down in small steps, raising the round each time, until the case mouth rolls into the cannelure (see Figure 24-9). Over-crimping can buckle the case or push the shoulder back.
3. Run the round back up, turn the stem down to touch the bullet and lock both.

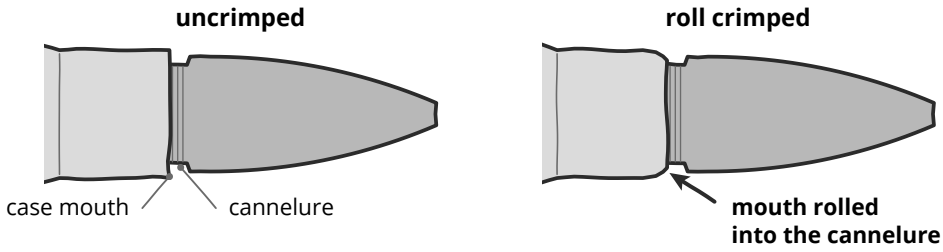

Figure 24-9. A roll-crimped round beside an uncrimped round.

With a separate taper or collet crimp die, seat first (see Chapter 5), then turn the crimp die down in small steps until the crimp just shows.

Chapter 25

Finishing, Labeling and Storage

Key points

- A round leaves the workshop for good, so its faults are cheapest to catch before it goes.
- A case gauge finds a tight round in the workshop, before it reaches the rifle.
- The label and the record are how the facts travel with each round.
- A full record lets you trace an odd result at the range back to a lot or a workshop step.
- Powder responds to where it lives. Heat raises pressure, and storage humidity can move velocity a long way.

Why it matters

A handload leaves the workshop as a finished product. After that it gets carried, stored and shot, sometimes months later and sometimes by someone else. The label and the record are how the facts travel with it.

Storage matters because powder responds to where it lives. Heat raises pressure, and moisture can move velocity a long way (see Chapter 13).

How it is done

Inspect every round

1. **Wipe each round clean.** Remove any sizing lube and grit. A clean round is easier to inspect and carries nothing into the chamber.
2. **Check the shoulder.** Too much force when seating or crimping can crush or set back the shoulder. That can cause chambering problems and change headspace. Set aside any round with a bulged or crushed shoulder. Small lube dimples are usually harmless and iron out when the round is fired.[1]
3. **Check the bullet.** It should sit straight in the neck. Look for shaved jacket metal at the case mouth and damage to the tip.
4. **Check the primer by touch.** Every primer should sit below flush (see Chapter 22).
5. **Measure.** Check CBTO and COAL on every round or on a sample. Set aside any round outside your normal spread. Check runout too if you track it (see Chapter 19).

Gauge or chamber-check

> **Safety · See Chapter 2**
> Never force a live cartridge into or out of the chamber of a gun.[2]

6. **Gauge each round, or chamber-check it at the range.**
   - *Gauge.* Drop each round into a case gauge. The case head should sit between the gauge's minimum and maximum marks (see Figure 25-1). The case mouth should not stand above the step at the mouth end either. The gauge checks the round against standard chamber dimensions, not your rifle's throat (see Chapter 9). The dummy round checked the throat (see Chapter 24).

- *Chamber-check.* If you check live rounds in the rifle, treat it as loading the rifle. Do it where you may load, with the muzzle in a safe direction and your finger off the trigger. Never chamber-check a load seated into the lands. Gauge it instead. Gauge every round for a semi-automatic too (see Chapter 26).

7. **Never force a round.** A round that will not gauge or chamber easily goes into the reject box. If a live round sticks in the chamber, keep the muzzle in a safe direction and do not force the bolt. Clear it as the rifle's manual directs, or take the rifle to a gunsmith.

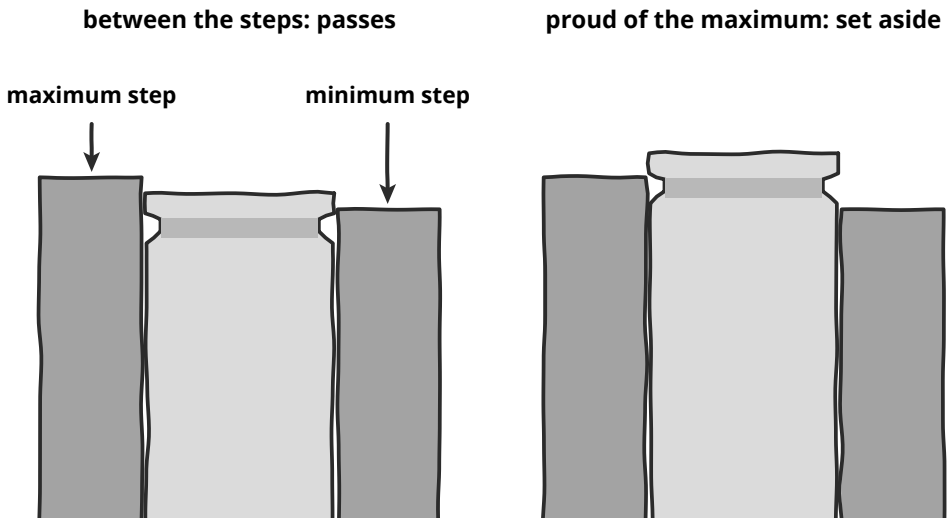

Figure 25-1. A loaded round in a case gauge, with the case head sitting between the minimum and maximum steps.

Deal with rejects

8. **Pull the bullet.** Take the round apart with a kinetic or collet bullet puller (see Chapter 5).[1] Work over a tray so no powder ends up loose on the workbench.
9. **Decide what happens to the powder.** Powder from a round you pull in the same session, before it has left the workbench, can go back into its container. You still know what it is. Dispose of the powder from any round that has left the workbench, because you can no longer prove what is in it (see Chapter 2). Never salvage powder from old cartridges or blend salvaged powder with new.[2]
10. **Leave the primer alone.** A pulled case still holds a live primer, so do not punch it out. Sort it into the matching primed-reject container from Chapter 22. If the primer sits properly below flush, place the case in "Primed. No powder. Fire before decapping." to fire empty at the range before decapping.[3] If the primer is high, tipped, upside down or damaged, place the case in "Primed. Do not chamber. Dispose."
11. **Find the cause before you load more.** Crushed shoulders come from too much seating or crimping force.[1] If a round will not gauge, check your sizing first (see Chapter 19). Other workshop problems are listed by symptom (see Chapter 31).

Box and label

12. **Box the rounds.** Use a box that holds each round upright and apart. Plastic cartridge boxes work well.[1]

13. **Label the box.** Put on everything someone needs to identify the load without your notebook.
    - The load and batch IDs from your record (see Chapter 27).
    - The cartridge and the rifle it was built for.
    - The bullet, the powder and charge, the primer and the case maker with its firing count.
    - The lot number of each component.
    - The CBTO with the comparator used, and the COAL.
    - The date loaded and the number of rounds.
14. **Reuse factory boxes with care.** Cover or remove the factory markings and label the box as a handload.[1]
15. **Keep dummy rounds apart.** Mark setup dummies and lands-gauge dummies plainly. Store them away from live ammunition.

EASIER ON EP · LOAD LIBRARY · MY LOADS

Load Library prints a label for a box of any saved load, with its components, charge, CBTO and COAL, lot numbers, date and round count.

empiricalprecision.com/loads?tab=mine

Box test loads for the range

Test ammunition needs more care than a box of practice rounds. Your tests compare loads by every shot fired, so you must always know which load each round was (see Part VI and *The Precision Rifle Handbook*, Part IV).

16. **Box test loads by row.** Standard ammunition boxes hold rounds in rows of five, which suits 5-round test blocks (see *The Precision Rifle Handbook*). Put one load in each row or each box, and label every row.
17. **Never top up a row or a box from another batch.** Each row holds one batch of one load. Mixed rows make every later comparison doubtful.
18. **Write the firing order for each pass on the lid.** The range protocol interleaves loads to spread barrel heat and shooter fatigue across them, and it rotates the starting load on each pass (see *The Precision Rifle Handbook*). A written order lets the range session follow the plan. A work-up is the exception. Write its steps in order, lowest first, and never interleave them (see Chapters 16 and 28).

Record the load

19. **Finish the record before the box leaves the workshop.** Fill in the batch record as you work (see Chapter 17). Keep a log with room for shooting results.[1] Record the load and the batch, each under its ID (see Chapter 27 for the IDs and what each record holds). Include the charge, the CBTO with its comparator, the COAL, every lot number, the scale check readings and anything unusual in the workshop.
20. **Use one format every time** (see Chapter 27). A full record lets you trace an odd result at the range back to a lot or a step in the workshop (see Chapter 31).

Store dry and cool

A loaded round is not a hermetically sealed container (see Chapter 13).[4] Keep closed ammunition boxes in an airtight container with a tight lid and a small desiccant pack. Aim for a steady humidity close to the one you worked up in, not the lowest. Add a humidity indicator card to watch the moisture level. If ammunition has been stored much drier than when you worked up the load, chronograph a few rounds against your records before you shoot a near-maximum load.

Keep ammunition away from heaters, sunlight and hot vehicles, at home and at the range (see Chapter 2). Never let powder or loaded rounds go above 100 °F, and keep them cooler where you can (see Chapter 13).[2] A round baked in a hot chamber or a hot vehicle can give a pressure spike (see *The Precision Rifle Handbook*). Keep powder and primers in their factory packaging, out of reach of children (see Chapter 2).[5]

Check stored ammunition before you take it to the range. Compressed powder presses back on the bullet and can push it out over time (see Chapter 13).[6] Measure CBTO on a few rounds from any box of compressed loads stored for months. If any have grown, reseat them to your CBTO before you shoot them (see Chapter 31). Make sure the label matches the rifle and cartridge you are taking.

Chapter 26

Loading for Semi-Automatic Rifles

Key points

- The bolt closes by spring force alone, so every round must chamber with room to spare.
- The magazine sets the length of rounds fed from it, and the slam of feeding must not move the bullet.
- Brass works harder and lives shorter in a gas gun, and its marks need reading in context.
- A floating firing pin taps the primer as the bolt closes, so primer seating and choice are safety questions.
- The action runs on pressure at the gas port, so powder choice matters beyond peak pressure.

Why it matters

A bolt-action rifle works at your pace. A semi-automatic rifle does all of that for you, powered by gas tapped from the barrel. That changes how you load in five ways.

- The bolt closes by spring force alone. It cannot force a tight case home the way your hand can on a bolt handle.[1]
- Rounds strip from the magazine and slam into the chamber. The bullet must not move in the neck.[2]
- The case is thrown clear at speed. Brass gets dented and marked.[3]
- Many designs use a firing pin that floats free in the bolt. It can tap the primer as the bolt closes.[4]
- The action runs on gas from a port partway down the barrel (see Figure 26-1). So the powder's behavior after peak pressure matters, not just the peak.[5]

Here is what to do differently for a gas gun. Everything else in Part V still applies.

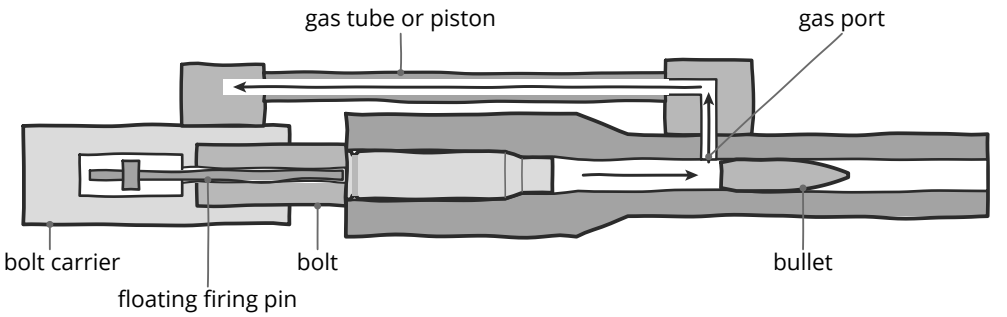

Figure 26-1. A gas-operated action with the bullet just past the gas port. Labels show the port, the gas tube or piston, the bolt carrier, the bolt and the firing pin.

How it is done

Watch the brass

Inspect for ejection damage. Look for dented mouths, shoulder dings and heavy extractor and ejector marks on the rim (see Figure 26-2).[6] Sizing usually irons out small mouth dents. Discard any case with a crack in the neck or body (see Chapter 18).[7]

Check often for signs of head separation. The larger shoulder bump a gas gun needs stretches the brass more on every firing and thins it near the web (see Chapter 18). Keep gas-gun brass apart from brass fired in bolt actions. Log firings for each lot, and expect shorter case life.

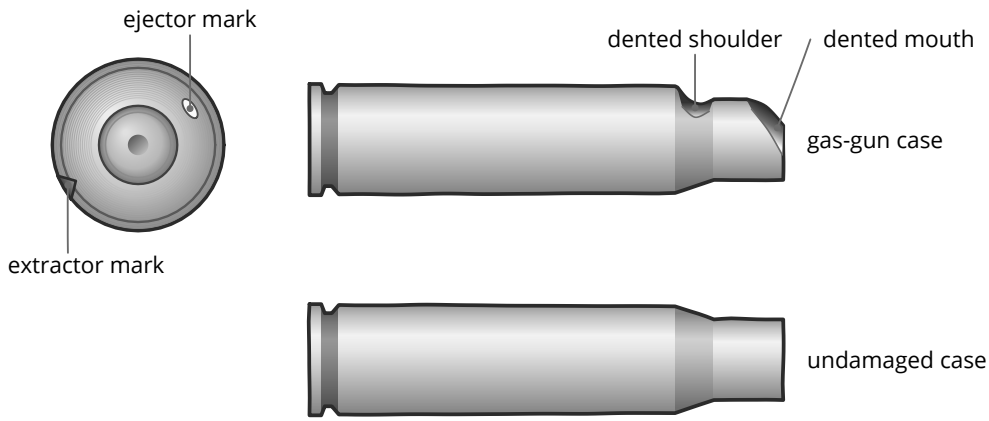

Figure 26-2. Gas-gun brass showing a dented mouth, a dented shoulder and extractor and ejector marks on the rim.

Treat military brass with care. Set Berdan cases aside before you deprime, and remove pocket crimps before priming (see Chapters 18 and 22). Military cases often have thicker walls and less capacity, so the same charge gives higher pressure.[8] Measure water capacity (see Chapter 11). Use data for military cases where it exists, and work up with care from the published start load.

Size for sure chambering

Set up the full-length die by measurement (see Chapter 19 and Figure 19-1), with three differences.

1. **Bump the shoulder more.** Size to .003 to .005 inch below the fired average from this rifle. A bolt action needs only .001 to .002 inch.[9]
2. **Full-length size every case.** Neck sizing alone leaves the body and shoulder at fired size.[10] A gas gun needs room to chamber every round under spring force.[11]
3. **Check the fit in a case gauge.** The bolt's feel tells you little. Drop the first sized cases into a case gauge (see Chapter 9).

When once-fired military brass from a generous chamber fails a case gauge near the web even after standard full-length sizing, a small-base full-length sizing die sizes the lower case body slightly smaller to restore reliable chambering. Use a small-base die only when a standard die will not bring the brass into gauge, because working the lower body harder

shortens brass life slightly. Once the brass is sized to your chamber and fired only in your rifle, a standard full-length die is usually enough.

Primers and floating firing pins

Understand floating firing pins and slam fires. In many semi-automatic service designs, the firing pin floats free in the bolt with no retaining spring.[12] When the bolt slams forward, the pin's momentum carries it on to tap the primer lightly. It often leaves a small dent on a round extracted unfired.[13] A high or very sensitive primer can fire from this tap before the bolt lugs lock. That is an out-of-battery slam fire. It can wreck the receiver and injure the shooter.[14] The risk rises if the case is under-sized, the bolt face is fouled, or you drop a round straight into the chamber and let the bolt slam shut.[15]

Feed every round from the magazine. Never drop a round into the chamber and release the bolt on it. Strip friction slows the bolt (see "Single-loading long rounds in slow fire" below for slow-fire matches).

Choose primers made for semi-automatic actions. Use primers made to military sensitivity specifications. Their thicker, work-hardened cups resist firing from the pin's tap.[16] They lower the risk of a slam fire but do not remove it. Correct headspace, a clean action and correct sizing still matter.[17] Any primer swap needs a new work-up from the published start load (see Chapter 28).

Do not chamber the same live round again and again. Each feed batters the bullet's ogive, moves the bullet in the case and dents the primer again.[18]

> **Safety · See Chapter 2**
> Seat every primer fully below flush (see Chapter 22).[19] Use military-specification primers, and check your rifle manual before loading, as some manufacturers advise against using handloads.[20] A primer that fires before the bolt locks can destroy the rifle.[21]

Magazine length and feeding

Find the magazine's limit. Find your magazine length with dummy rounds (see Chapter 3). In a gas gun, the longest dummy must also chamber and extract cleanly every time under spring force. If the magazine stops you well short of the lands, seat to magazine length and accept the jump. Seating effects shrink in large samples, so a long jump is not a defect (see Chapter 24).

Check for bullet setback. Build a marked dummy the way you built your reference round (see Chapter 24, steps 6 to 8), sized and seated like a live round. Never use a lands-gauge dummy. Measure its CBTO. Load it into the magazine, release the bolt to strip and chamber it, and extract it unfired. Measure the CBTO again (see Figure 26-3). A change larger than your normal CBTO spread means the bullet moved. A shorter reading means setback. Repeat with two or three dummies before you decide. Hard cycling in a gas gun can move bullets either way.[22] Setback seats the bullet deeper, which takes room from the powder and raises peak pressure.

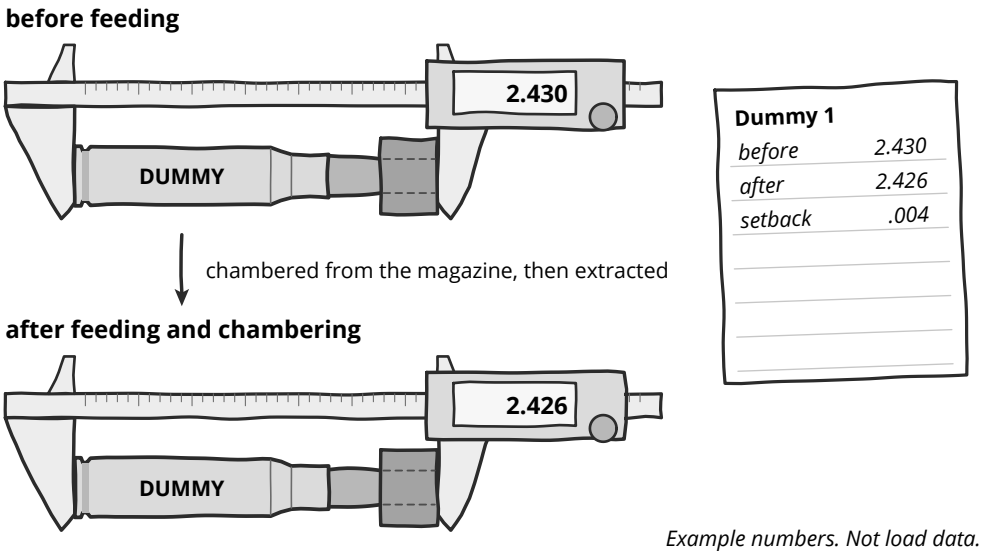

Example numbers. Not load data.

Figure 26-3. Measuring a dummy round's CBTO before and after it is fed and chambered from the magazine.

Correct setback at the case neck. Check your neck tension and sizing die setup (see Chapter 19). If neck tension alone cannot hold the bullet under cycling, crimp it.[23] Set the crimp die as for any crimped load (see Chapter 24). A crimp is part of the load, so work up with it (see Chapter 28). A roll crimp needs a cannelure or crimp groove on the bullet (see Chapter 24), and several bullet lines provide one for semi-automatic use.[24] A collet crimp can grip a bullet without one (see Chapter 5). Where the rifle maker calls for cannelured bullets, crimped securely, use them.[25]

Single-loading long rounds in slow fire

Highpower Service Rifle shooters often single-load heavy bullets, such as 80 gr .223 Remington bullets seated past the standard 2.260 inch AR-15 magazine limit, during slow-fire stages (see Chapters 3 and 24). Never drop a long round straight into the chamber and release the bolt on it. Without magazine drag to slow the carrier, the bolt slams shut at full speed, raising the risk of an out-of-battery slam fire and extractor damage. Instead, insert a single-shot loading block (sled) into the magazine well and lay each round on its follower so the bolt strips and controls the cartridge into the chamber. Pair this with military-specification primers seated .003 to .005 inch below flush (see Chapter 22).

Gauge every round

Drop each finished round into a case gauge (see Chapters 9 and 25, and Figure 25-1). Do not rely on the rifle's chamber to catch a tight round. A round that will not chamber fully jams the rifle with a live round in the chamber and the bolt not locked. Never force the bolt closed on a tight case. An inertial blow to the primer can fire the round before the bolt locks, and the case can rupture.[26] Keep the muzzle in a safe direction and clear the stoppage as the rifle's manual directs.[27] A live round left in a very hot chamber can also cook off.[28]

Gas port pressure and powder choice

Nothing happens at the port until the bullet passes it. From then until the bullet leaves the muzzle, gas flows into the system and drives the bolt carrier. So the action responds to the pressure at the port and how long it lasts. The time from port to muzzle is called dwell time.[29]

Peak chamber pressure comes early, in the first few inches of bullet travel.[8] The port sits much farther down the barrel. Two loads with the same peak can have very different pressure by the time the bullet reaches the port (see Figure 26-4). A slower powder is still burning later in the barrel, so it tends to keep more pressure there.[30] Too much gas can make the action cycle violently, damage brass and break parts.[31] Too little can leave the action short of a full cycle.[32] Peak chamber pressure is still the safety limit for the chamber.

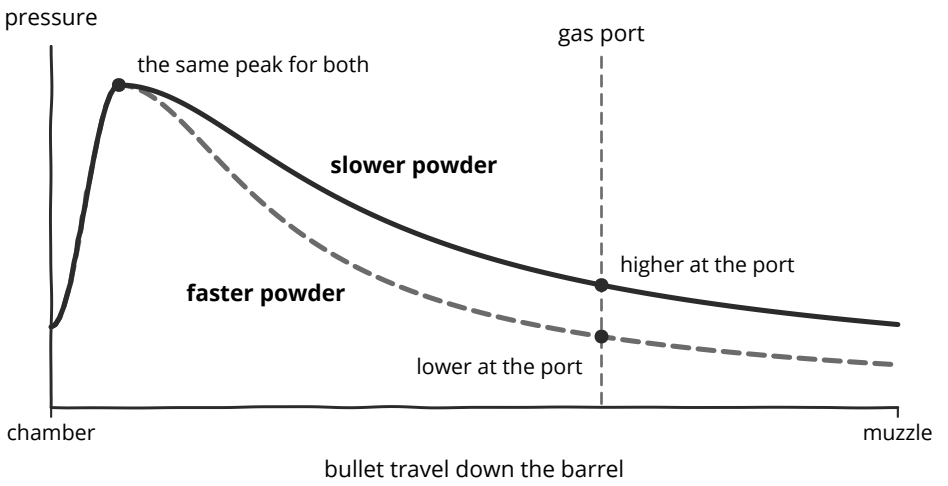

Conceptual curves. Not measured data.

Figure 26-4. Two pressure curves against bullet travel with the same peak. One falls away quickly. The other stays higher down the barrel. A vertical line marks a gas port location.

Safety · See Chapter 2

When a manual publishes separate gas-gun data, use that data and its listed powders for a gas gun. For example, one manual caps its 6mm ARC gas-gun loads at 52,000 psi.[33] Its 6mm ARC bolt-action loads run to 62,000 psi and are unsafe in gas guns.[34] Never transfer a bolt-action load to a gas gun without checking gas-gun data.

EASIER ON EP · IGNITION · INTERNAL BALLISTICS

Ignition shows each candidate powder's predicted pressure down the barrel, so you can compare them at your gas port's distance. Like every prediction, it is for learning.

empiricalprecision.com/heurisko?tab=ignition

Working up in a gas gun

Work up as for any rifle. Start at the published start load for your exact components, from gas-gun data where it exists. Step up in small increments and chronograph every shot (see Chapters 16 and 28). Load a single round into the magazine for each shot, never

straight into the chamber (see “Primers and floating firing pins” above). That way the bolt locks open after firing and cannot chamber the next, heavier step before you inspect the fired case.

> **Safety · See Chapter 2**
> Match your load data to your rifle’s chamber marking. A SAAMI .223 Remington chamber is rated to 55,000 psi and has a shorter leade than a 5.56x45mm NATO chamber, which runs at higher pressure with a longer leade. Firing 5.56x45mm NATO loads in a .223 Remington chamber can spike pressure sharply. A .223 Wylde chamber is a Service Rifle match chamber cut to accept both safely; even so, start from published .223 Remington start data and work up for your rifle.

Read brass marks in context. Gas guns often leave ejector and extractor marks on the case head, even with mild loads well inside pressure limits.[35] Judge each step’s marks against those at the start load in this rifle. Marks that are new or heavier, or a bent rim, mean the bolt is unlocking too early or too hard under residual pressure. The cause can be high chamber pressure, gas port timing or both.[36] Treat such marks as a pressure sign and stop the work-up there (see Chapter 28). Find the cause before you load again.

Note mechanical function at every step. Record any failure to feed, chamber, extract, eject or lock open on an empty magazine. A low step may not cycle fully. If a shot fails to cycle the action and the chronograph did not read the expected velocity, unload and check the bore for a stuck bullet before firing again (see Chapter 2). If velocity was normal, record the short cycle and continue within the stop rules. Never pass the published maximum or your velocity ceiling to make the action cycle. A load that still cycles short, or cycles violently, near the top does not suit this rifle’s port pressure and dwell time. Try another powder from gas-gun data.

VI

Part VI

Function Testing, Records, and Troubleshooting

Chapter 27. Keeping Records 140
Chapter 28. Working Up Safely 148
Chapter 29. Popular Methods Examined 154
Chapter 30. Living With a Load 159
Chapter 31. Troubleshooting 165

Chapter 27

Keeping Records

Key points

- Each record links to the one above it, so any shot traces back to its session, batch, load, lots and rifle.
- A note written on the spot is evidence. A note written later is memory.
- You can always calculate a new summary from raw readings, but you can never recover raw readings from a summary.
- Never alter raw data. An exclusion is a note beside a shot that stays in the record.
- Failed loads, stopped work-ups and a retired barrel's logs belong in the record too.

Why it matters

Handloading asks you to write something down at almost every step. Scattered across notebooks, labels and target sheets, those facts answer nothing. Kept as one connected record, they answer three questions.

What is in this box? A slow string or a stiff bolt traces to one lot or one workshop step only if the box leads back to them.

Is this still the load I tested? Seasons change, lots run out and the throat wears (see Chapter 30). You can tell drift from noise only against a history.

What did the test really show? Most tests pool shots from several sessions, because small samples mislead (see *The Precision Rifle Handbook*, Chapters 14 and 15). Pooling works only if every shot carries its load. A result can be checked only while every raw shot is still there.

How it is done

Choose one format and write at the time

Two formats work, and neither needs special tools.

- **A bound notebook.** Pages cannot fall out, and the order of the entries shows when each was written. Number the pages and date every entry.
- **A spreadsheet.** It sorts, filters and does the arithmetic (see *The Precision Rifle Handbook*, Chapter 15).

Paper in the workshop and at the range, with a spreadsheet at home, works well. Pick one format for each kind of record and use it every time.

Write each entry when it happens. Note the lot number as you open the container and the scale check as you make it. At the range, write a shot's call before you look at the target (see *The Precision Rifle Handbook*, Chapters 10 and 14). A note written later is memory. It cannot show that an error was noted before you saw where the shot went.

Build one ID chain

Give every record a short ID, and write on each record the ID of the one above it. The chain runs rifle, load, batch, session and shot. A session can fire several batches, so each shot names both its session and its batch.

Level	What it is	Example ID	Chapters
Rifle	One barrel on one action	Rifle 1	3, 24
Load	One recipe	B3	16, 25, 28
Batch	Rounds loaded together from one lot of each component	B3-2	17, 25
Session	One range trip with one rifle	14	28, 30
Shot	One round fired	14-04	28; *The Precision Rifle Handbook*, Ch. 13–15

Safety · See Chapter 2
Work up again from the published start load after any change of primer, case maker, bullet or powder. Do the same after seating deeper than the worked-up seating or into the lands, and with a new barrel or a changed barrel length. For a new lot of the same component, record the lot. Load 10 check rounds at your current charge, or one step lower if your charge is at or near the published maximum. Compare their velocity with your records before loading in bulk. If the new lot runs faster by more than twice the noise (see Chapter 30), reduce the charge and work up again from below.

1. **Rifle.** Use a short name, such as Rifle 1. A new barrel starts a new rifle record with its round count at zero. Its lands, baseline and work-ups all start over (see Chapter 30).
2. **Load.** Use a letter for each work-up and a number for each step. Load B3 is step 3 of work-up B. Any change of charge or CBTO makes a new load ID. A change of primer, case maker, bullet or powder needs a new work-up. So does seating deeper or into the lands. Each starts a new work-up letter (see Chapter 28). A change that does not require a new work-up, such as seating B3 slightly longer (while still off the lands), takes a letter suffix: B3a, then B3b.
3. **Batch.** Use the load ID and a running number: B3-1, then B3-2. Each loading session starts a new batch. A new lot of any component starts a new batch, even partway through a session.
4. **Session.** Number each rifle's sessions in order. Shoot two rifles on one trip and you have two sessions.
5. **Shot.** Use the session number and the order fired. Shot 14-04 is the fourth round fired in Session 14. Number every round, foulers and sighters included, so the numbers follow the chronograph string.
6. **Write the IDs everywhere.** Put them on the box label, the target sheet, the chronograph file name and the log page.

Worked example. Example numbers. Not load data.

```
Rifle 1      24-inch barrel, 1:8 twist, magazine length 2.800 inch
             Lands 2.252 inch CBTO at 350 rounds
             (comparator A, method A)
Load B3      For Rifle 1. Step 3 of work-up B. Bullet 1,
             powder 1, primer 1, case maker 1. CBTO 2.222 inch,
             comparator A. COAL 2.795 inch
Batch B3-2   Loaded 12 May 2026, 20 rounds
             Lots: bullet 221, powder 114, primer 07,
             brass batch D-3 at 3 firings
Session 14   19 May 2026, Rifle 1, 100 yards
             Air 58 °F, ammunition 61 °F
             Round count 350 at the start
             Batch B3-2 averaged 2,712 fps
Shot 14-04   Batch B3-2, group 1, X 1.45 inch, Y 2.15 inch, 2,709 fps
```

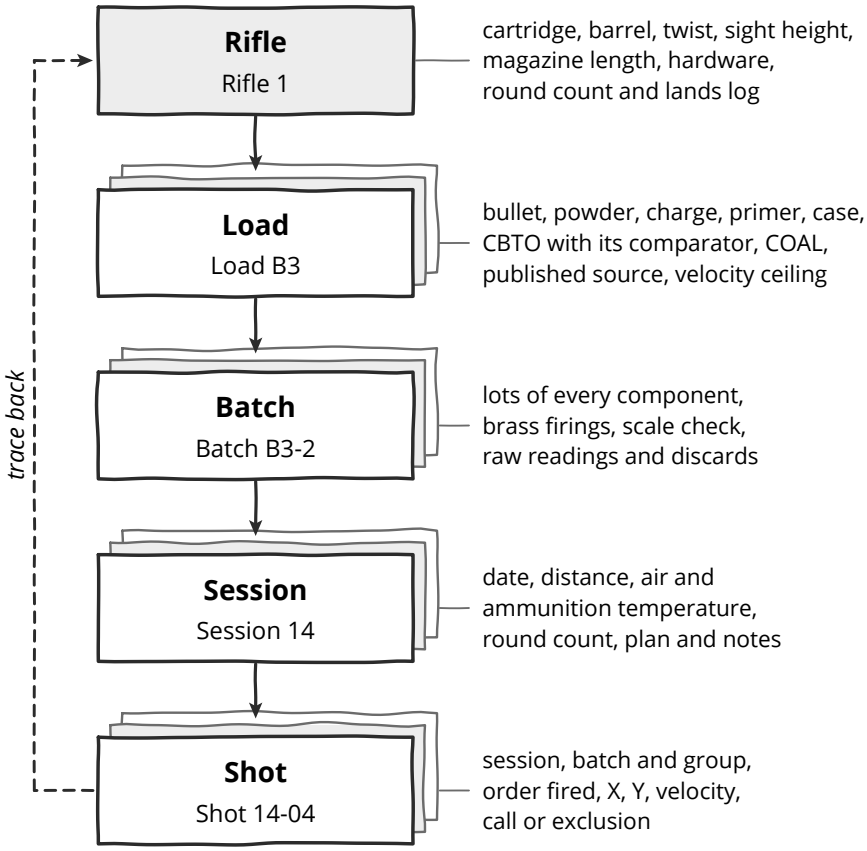

Example numbers. Not load data.

Figure 27-1. The record chain. Each record names the one above it, so every shot traces back to its rifle, load, batch and lots.

Now follow a lot check through the chain. Batch B3-3 is 10 check rounds for powder lot 120, new since B3-2. In Session 15, a week later at about the same temperature, they average 2,738 fps with an SD of 9 fps. B3-2's 15 test shots averaged 2,712 fps with an SD of 8 fps. Nothing else in the chain changed, so any real difference comes from the lot. A velocity rise at the same charge is a warning, so judge it against its noise (see Chapter 30).

```
noise = √(8² ÷ 15 + 9² ÷ 10) = √12.4 = 3.5 fps
rise  = 2,738 − 2,712 = 26 fps, more than 7 times the noise
```

The rise is far more than twice the noise, so it is real. Lower the charge and work up again from below with the new lot before you load it in bulk (see Chapter 28). Example numbers. Not load data.

The rifle record

The rifle record holds the measurements from Chapter 3: cartridge, barrel length, twist, sight height and magazine length. Add the hardware, with its torque values and the date of the configuration.

Three parts of the rifle change, so give each one a dated log.

1. **Round count.** Update it before each session. Add every round fired through the barrel, foulers and sighters included (see *The Precision Rifle Handbook*, Chapter 14).
2. **Lands log.** Write one line per sitting. Give the bullet, method and comparator, each reading with the average and spread, the date and the round count (see Chapter 24).
3. **Baseline log.** Write each baseline with its date, the hardware it was shot with and its result. A hardware change closes the old baseline and opens a new one (see Chapter 3).

EASIER ON EP · FIREARMS · RIFLE PROFILES

Firearms keeps each rifle's record and its lands log, and gives how far the lands have moved per 100 rounds.

empiricalprecision.com/firearms

The load and batch records

The load record is your master recipe. Write it before you load the first batch, and keep it up to date. Record the components, charge weight, CBTO (with its comparator), COAL, published data source, book start and maximum charges, and your velocity ceiling.

The batch record is the workshop log page for one batch (see Chapter 17 and Figure 17-2). Each page holds:

- The batch ID, the load ID and the date.
- The bullet, powder and primer lots, copied from each box or container as you open it (see Chapters 12 to 14).
- The brass batch, its lot, its firings and its measured capacity (see Chapters 11 and 18).
- The scale check readings (see Chapter 23).
- The die settings, the inserts, the fired base-to-shoulder average with the target sized reading, and the raw readings for shoulder bump, length and CBTO (see Chapters 19, 20 and 24).
- Each discarded case and why (see Chapter 18).
- The number of rounds loaded, and anything unusual.

Brass carries its history from batch to batch: firings, growth per firing (see Chapter 20), annealing settings (see Chapter 21) and discards. That history shows when to trim and what ends your cases' lives.

EASIER ON EP · LOAD LIBRARY · MY LOADS

Load Library keeps each load's full recipe, down to the CBTO with its comparator and the brass with its firings.

empiricalprecision.com/loads?tab=mine

The work-up record

A work-up has a safety job, so its record carries more (see Chapters 16 and 28).

1. Before you load, write the goal, the published source, the start and maximum charges with their velocities and your velocity ceiling. List the steps with each step's book velocity.
2. At the range, record every velocity in order, and each step's gain over the step before. Note the bolt lift, or in a semi-automatic how the action cycles, and what you saw on each case head and primer.
3. Write where you stopped and which stop rule stopped you (see Chapter 28).
4. Write the working charge you chose and the step it sits below.

Keep a stopped work-up as carefully as a finished one. It shows where this rifle met a stop with those components and lots, though it never replaces a new work-up.

The range session record

Write the plan before you go. Give the session ID, the rifle, the loads and batches, the block order and the shot counts. Add how many foulers and sighters you will fire (see *The Precision Rifle Handbook*, Chapter 14). Then record:

1. The date, the distance, the aim offset, the chronograph and the barrel round count at the start.
2. The air and ammunition temperature, the station pressure, the altitude and the wind (see *The Precision Rifle Handbook*, Chapters 14 and 19).
3. Each shot in the order fired, with its group and any call, written before you look at the target.
4. Each fouler and sighter on its own line, marked as such. The chronograph caught them too, so this keeps the readings in step with the shots.
5. After every block, the count of chronograph readings against shots fired (see *The Precision Rifle Handbook*, Chapter 14).
6. At home, each shot's X and Y from its aim mark, and its velocity.

Label each target sheet with the session and the load. Photograph it with a known length in the frame and keep it. Keep the chronograph file under the session ID.

EASIER ON EP · SESSIONS · RANGE SESSION LOG

Sessions keeps a record of every target you shoot, and each one traces back to the rifle, load and lots that made it.

empiricalprecision.com/sessions

Keep raw data, and never change it

Raw data are the readings themselves: every X, Y, velocity and shoulder reading. A mean radius, an SD or an average is worked from them. Keep the readings and you can work out any summary later, with more shots or a better method. Keep only the summary and the readings are gone (see *The Precision Rifle Handbook*, Chapters 13 and 15). Once written, raw data never change.

1. **Correct by adding, never by erasing.** Cross out a wrong entry with a single line so it remains legible, then write the corrected value, the reason and the date beside it. If you mismeasure a bullet hole, re-measure it and add the corrected reading the same way.
2. **Keep raw data on its own sheet.** In a spreadsheet, do the arithmetic on another sheet that reads from it.
3. **Exclude by note, never by deletion.** Foulers and sighters are marked as such. Leave a test shot out of its group only for a shooter or equipment error noted when it happened (see *The Precision Rifle Handbook*, Chapter 14). Mark the shot "excluded group", with the reason and when you noted it. Its velocity still counts, and the shot stays in the record. Run the analysis with and without it.
4. **Treat a chronograph misread the same way.** Keep the reading. Mark the shot "excluded velocity" and give the reason. Its hole still counts in the group.
5. **Keep failed loads and stopped work-ups.** Dropping the losers biases your records the way dropping shots biases a group. A rejected load also shows why the winner won, and it saves you from testing the same idea twice.

EASIER ON EP · CHRONOS · CHRONOGRAPH IMPORT

Chronos keeps each chronograph string with every reading and exports it for a spreadsheet. A reading you know the chronograph misread can be set aside. It stays in the string and drops out of the statistics.

empiricalprecision.com/chrono

One row per shot

A spreadsheet works best with one row for every round fired and one column for each fact. Keep a shot sheet with these columns.

Column	Holds
Session	The session ID
Load	The load ID
Batch	The batch ID
Group	The block or aim mark

Column	Holds
Shot	The order fired in the session
Status	Test, fouler, sighter, excluded group or excluded velocity
X	Inches right of the aim mark
Y	Inches up from the aim mark
Velocity	fps, as read
Note	The call, or the reason for an exclusion and when you noted it

Keep a sheet for each level above it too: rifle, load, batch and session. Each sheet has one row per record, keyed by its ID. The session sheet holds the rifle, date, distance and conditions. No shot row repeats them.

To analyze one load, filter the shot sheet to that load. For composite mean radius, include all `test` shots and `excluded velocity` shots (since a chronograph misread does not affect where the bullet hit), measuring each shot from its own group's center. For velocity SD, include all `test` shots and `excluded group` shots (since a pulled aim does not affect muzzle velocity). Calculate both as shown in *The Precision Rifle Handbook*, Chapter 15. You can also filter by batch or session to check whether one stands apart from the rest.

Worked example. Example numbers. Not load data.

Session	Load	Batch	Group	Shot	Status	X	Y	Velocity	Note
14	B3	B3-2	F	1	fouler			2,694	Separate aim mark
14	B3	B3-2	1	2	test	1.20	2.05	2,714	
14	B3	B3-2	1	3	test	1.70	1.75	2,706	
14	B3	B3-2	1	4	test	1.45	2.15	2,709	
14	C2	C2-1	2	9	excluded group	1.35	3.60	2,739	Felt the rifle jump off the rest. Noted before looking.

Results, decisions and long-term logs

Record each result with what it rests on. Give the sessions and shots it used, the shot count, the number of groups and the interval. Write the decision beside it, with the plan you fixed before the test, what you chose and the date (see *The Precision Rifle Handbook*, Chapters 15 and 16).

Keep three running logs for each load you go on shooting (see Chapter 30).

- **Velocity history.** One line per session: the mean, SD and shot count, the ammunition temperature, the barrel round count and the lots.
- **Lot changes.** The date, the component, the old and new lots and the result of the velocity check.
- **Temperature response.** Any session where temperature shifted velocity beyond normal noise, along with any fps-per-degree slope calculated from your velocity history, the sessions used and the temperature span covered.

The drop chart and the DOPE card, the card of sight settings for each distance (see *The Precision Rifle Handbook*, Chapter 20), belong to one rifle and one load too. Note the velocity and the sessions each was built from.

EASIER ON EP · ANALYSIS · STATISTICAL TOOLS

Analysis gives a text report of each result, with its numbers, conditions and notes, to keep with the decision it supports.

empiricalprecision.com/analysis



Back up and keep the records

A lost record is a test you have to shoot again.

1. After each session, photograph or scan the new notebook pages.
2. Keep a second copy of the spreadsheet, the photographs and the chronograph files in a different place from the first.
3. Keep the target sheets in a folder marked with the session IDs.
4. Keep every record for at least the life of the barrel. The lands rate, the velocity history and any temperature slope come from records that span it (see Chapter 30).
5. When you retire a barrel, close its record with its final round count. Keep it with the rest.

EASIER ON EP · CUSTOM DATA · BACKUPS

Custom Data exports one backup file of your firearms, loads, sessions, chronograph strings and Analysis queues, to keep with your other copies after each session.

empiricalprecision.com/db-management



Chapter 28

Working Up Safely

Key points

- The published maximum charge (the book maximum) was safe in the test lab's barrel. You must find your own rifle's limit from below, in small steps.
- Velocity follows pressure. A chronograph is the best pressure gauge you have at home.
- Stop at the book maximum charge or your velocity ceiling, whichever comes first. The velocity ceiling is the book velocity at the maximum charge, lowered for a shorter barrel and never raised for a longer one.
- Pressure signs mean stop now. Their absence does not mean safe.
- A work-up holds only for the components, seating and barrel it was done with. A change sends you back to the start load, and a new lot needs a velocity check.

Why it matters

The published maximum was safe in the source's test barrel with the source's components. Your rifle may reach the same pressure with less powder. Differences in bore, throat or case capacity can each do it. The work-up finds out from below, one small step at a time.

Pressure climbs faster than velocity, so the last steps before the maximum add a little speed and a lot of pressure.[1]

The warnings many handloaders rely on, such as flattened primers and marked case heads, often come late or not at all. You need a better gauge, and a chronograph gives you one.

How it is done

Plan the work-up before you load a round (see Chapter 16, "Plan the work-up"). Bring the plan and its two limits to the range, with the rounds boxed by step.

The stop rules

Stop at once, and go no higher, at the first of these:

- The published maximum charge.
- Any shot that reaches your velocity ceiling.
- Any pressure sign (see "Pressure signs, and why they fail" below).
- A step that gains far more velocity than the steps before it.
- A shot that sounds or feels weak, or anything else abnormal or unexplained.

> **Safety · See Chapter 2**
> Stop at the book maximum charge or your velocity ceiling, whichever comes first. A pressure sign means stop now, and no sign does not mean safe.

At the range

1. Set up the chronograph as its maker directs. Count its readings against your shots to check that it reads every one (see *The Precision Rifle Handbook*, Chapter 14). If the chronograph misses a shot, do not move to a heavier step until you get a velocity reading at the current step. If you have no more rounds at that step, stop the work-up there. Because a chronograph that reads artificially low can let you pass your velocity ceiling unnoticed, use a Doppler unit when you can (see Chapter 10).
2. Start with a cool barrel and keep an even pace between steps. Fire any foulers from factory ammunition at a separate aim mark (see *The Precision Rifle Handbook*, Chapter 14). Fire the steps in order, lowest first, so that any warning comes at the lowest charge possible.
3. Record every velocity, and what you see on each case (see Chapter 27).
4. After each shot, check the bolt lift, the primer and the case head before you load the next round (see "Pressure signs, and why they fail" below). If a shot sounds or feels weak, unload the rifle and check the bore for a stuck bullet before you fire again (see Chapter 2). In a semi-automatic, load one round at a time, so the action cannot chamber the next round before you have looked at the case. Ejector or extractor marks that are new or heavier than at the start load are a pressure sign: stop (see Chapter 26). A flattened, cratered or pierced primer still means stop. Note how the action cycles.
5. After each step, compare its velocity with two things: the book velocity for that charge and the gain over the step before.
6. Stop at the first stop rule you meet. Do not fire the remaining higher steps. Take them home and pull the bullets.

Your first step may already be faster than the book's start velocity, even after the barrel adjustment. If so, expect to meet the velocity ceiling before the maximum charge. If the start load itself reaches the ceiling, stop there. Never load below the start charge. Change a component and work up from its own published start load (see Chapter 2).

Steps of the same size should each add roughly the same velocity (see Figure 28-1). When the step size changes, compare the gain per grain instead. Say each step has added about 40 fps, and the next one adds 90 fps. That step gained far more than the steps before it, so stop there. Example numbers. Not load data.

EASIER ON EP · SESSIONS · RANGE SESSION LOG

Record each step in Sessions, with its load and its chronograph string. Sessions lays the steps out lowest first with each step's velocity.

empiricalprecision.com/sessions

Velocity: the best pressure gauge you own

Velocity comes from pressure pushing the bullet down the barrel. To leave a barrel of the same length faster, with the same powder and bullet, the bullet needs more push. So velocity tracks pressure.

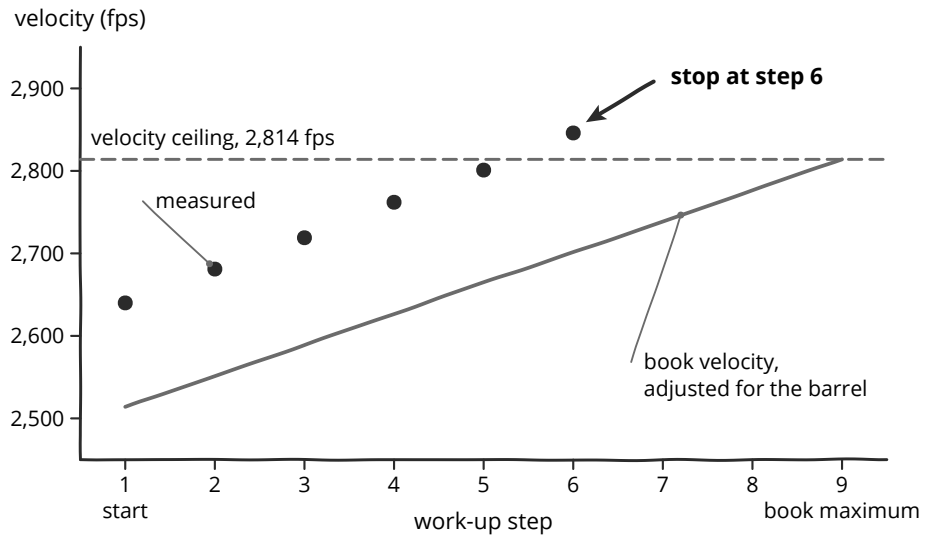

Example numbers. Not load data.

Figure 28-1. A work-up plotted. Measured velocity climbs step by step and meets the velocity ceiling before the book maximum charge.

Evidence · Supported by data
The velocity rule: if you exceed the book's velocity, you have exceeded the book's pressure. Matching it does not prove you are safe. In percentage terms, pressure moves about 3 times as much as velocity for a change of charge, and 10 times or more for a primer swap.[1] Velocity is the best pressure indicator a handloader has at home.[2]

The rule holds only for a barrel like the test barrel. That is why you adjust the book velocity for a shorter barrel before you start.

Even in a barrel like the test barrel, velocity is an indirect indicator of pressure. A chronograph reads the bullet, not the chamber. Your velocity ceiling is only an estimate of the velocity your rifle gives at the book's maximum pressure. It is more reliable than a sticky bolt or a cratered primer (see "Pressure signs, and why they fail" below), but it is still an estimate. The velocity ceiling is a safety limit, not a target to reach. Pick your working charge to meet the velocity goal you set in advance, well below the ceiling (see "Leave a margin" below).

Pressure signs, and why they fail

Pressure signs are the marks and feelings that some loads leave behind.

- A stiff or sticky bolt lift.
- An ejector mark: a bright spot on the case head where brass flowed into the ejector hole in the bolt face.
- A cratered primer, with metal pushed back around the firing-pin dent.
- A pierced or blown primer, with a hole through the cup or the primer pushed out of its pocket.
- A flattened primer, its rounded edge pressed square into the corner of the pocket.

- A black ring of soot around the primer, where gas leaked past it.[3]
- A primer pocket that seats the next primer loosely after one firing.[4]
- Case-head expansion: growth in the diameter of the case head.

Once a load shows any of these signs (see Figure 28-2), do not fire it or any heavier step again. Set your maximum below the step that showed it.

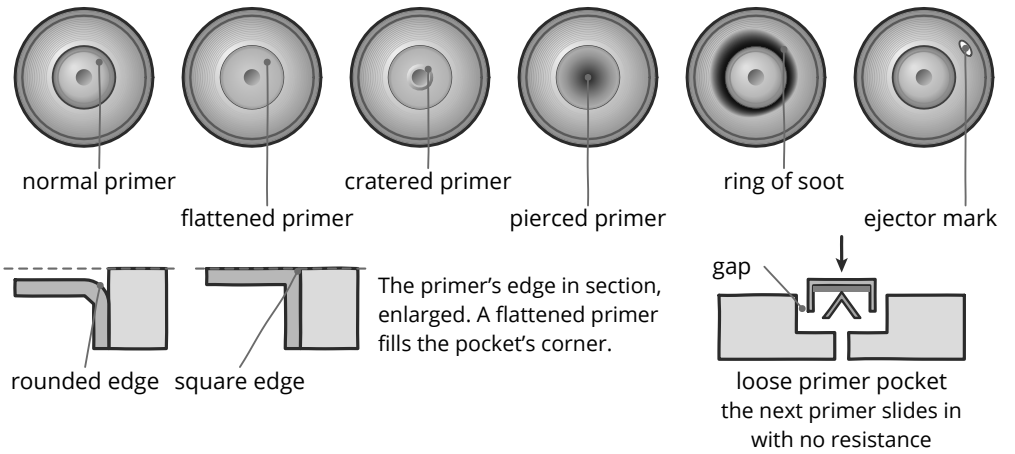

Figure 28-2. Pressure signs on fired cases, beside a normal primer: a flattened, a cratered and a pierced primer, a black ring of soot around the primer, an ejector mark and a loose primer pocket. Each sign means stop now. The same marks can appear in factory ammunition, and their absence proves nothing.

Nearly every manual teaches these signs. The evidence shows they are poor early warnings. Here is the case, from claim to verdict.

Contested: primers and case heads give early warning

The claim. Primers and case heads warn you before pressure gets dangerous.

The physics. These marks depend on more than pressure. Excess headspace, for one, flattens primers at low pressure. A pocket worn by many firings can leak gas around the primer without high pressure.[5]

The test. A comparison set case-head expansion against pressures measured by instrument.[6]

The data. Case-head expansion usually points only to a pressure somewhere between 45,000 and 70,000 psi. It needs 50 to 100 measurements to mean anything.[6] Hatcher called primer reading "notoriously unreliable".[7] In a laboratory test with handgun cases, a load at almost twice the pressure limit left a fired case that looked normal. A chronograph would have revealed it.[8] A stiff bolt lift, a flattened primer, a cratered primer and an ejector mark all turn up in factory ammunition.[9]

The verdict. Folklore. The signs fail as an early warning. A sign means stop now. No sign proves nothing about safety.

Leave a margin

The charge where you stopped is not the charge to load. Back off from it.

> **Evidence · Supported by data**
> Loading 5 percent below maximum gives about 10 percent less pressure for about 3 percent less velocity.[10]

At 2,800 fps, 3 percent is 84 fps. Giving up 84 fps buys about a tenth off the peak pressure. Example numbers. Not load data.

Heat is the other reason for a margin. A load near the line on a mild day has nothing left for the hottest day your ammunition will see. Every powder responds to heat differently, and "temperature stable" describes a range of behavior, not zero change (see Chapter 13). Leave a heat margin of at least 1 fps for every degree Fahrenheit between your ammunition's temperature during the work-up and the hottest temperature it will ever face. Account for every warm spot the rounds may encounter: a vehicle in the sun, a pocket, a box on a sunny range or a warm chamber. Keep your working charge's velocity at least that far below your velocity ceiling. If your own records show a steeper temperature slope, use that larger number, never a smaller one (see Chapter 30).

Worked example. The work-up was fired with the ammunition at 60 °F, and the hottest it will see is 100 °F. At 1 fps per °F, the working charge must run at least 40 fps below the velocity ceiling. Example numbers. Not load data.

Choose the working charge from the velocity goal you set (see Chapter 16), not from the top of the work-up. Take the lowest step that meets all three of these conditions:

- It must meet your goal.
- It must sit at least one full step below the step where you stopped.
- Its velocity must sit below your velocity ceiling by at least the room for heat.

One full step is the least margin, and the 5 percent figures above show what a larger margin buys (see Figure 28-3). If no step meets all three, lower the goal or change components. Do not trade the margin away. Then test that one charge for precision, with enough shots to mean something (see *The Precision Rifle Handbook*, Chapters 14 to 16).

Work up again after any change

A work-up belongs to one set of components. Change a component and the old stopping point no longer applies.

- **Primer.** A primer change can raise pressure far more than velocity, so the chronograph may not show it (see Chapter 12).[1]
- **Case maker.** A couple of grains of water less capacity raises pressure near the maximum (see Chapter 11).[12]
- **Bullet.** Two bullets of the same weight can differ in length, bearing surface and jacket, and so in peak pressure (see Chapter 14). Monolithic copper bullets build pressure differently and need their own data.[13]
- **Seating (CBTO).** Seating deeper than tested leaves less room for the powder and raises peak pressure. Seating into the lands raises it too (see Chapter 24).

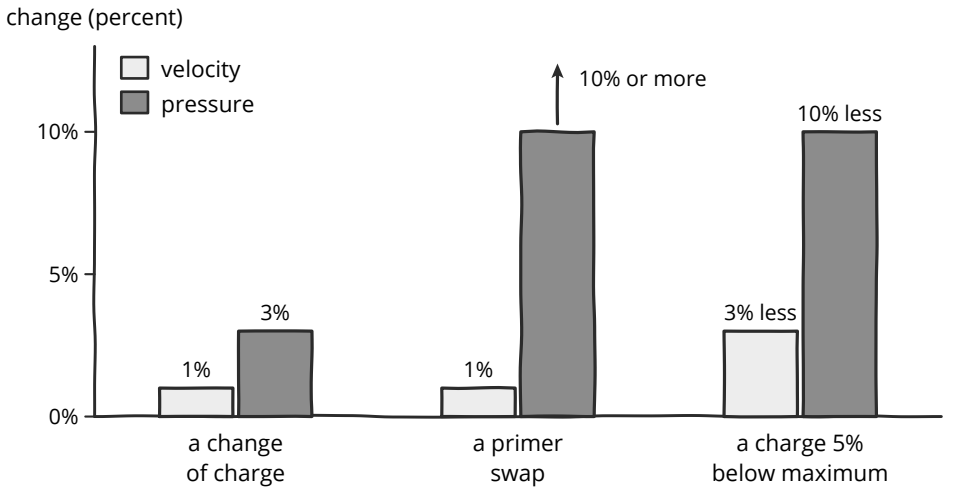

Figure 28-3. Pressure moves more than velocity. In percentage terms, pressure moves about 3 times as much as velocity for a change of charge, and 10 times or more for a primer swap.[11]

- **Powder.** A different powder is a new load, even when the name sounds similar (see Chapter 13).
- **Barrel.** A new barrel, or a changed barrel length, starts over (see Chapter 30).

Drop back to the published start load and work up again. It costs a few rounds. It is the only way to see the new combination from below.

A new lot of the same component is not a new component. Modern lots usually differ only a little, but record the lot and check it rather than assume. Load 10 check rounds at your current charge, or one step lower if it sits at or near the published maximum. Fire them interleaved with old-lot rounds at the same charge if you have any, or compare their velocity with your records at that charge (see Chapter 30). If the new lot runs faster by more than twice the noise (see Chapter 30), lower the charge and work up again from below. Stop at the book maximum charge or your velocity ceiling, whichever comes first, as in any work-up. Load in bulk only after the check.

Safety · See Chapter 2
Work up again from the published start load after any change of primer, case maker, bullet, powder or barrel. Do the same after seating deeper than the worked-up seating or into the lands. Velocity can hide a primer change.[1]

Next step: from a safe load to a field DOPE card. Once your work-up gives you a safe working charge with margin, turn to *The Precision Rifle Handbook* to verify performance on target and build field data: Chapter 10 for zeroing, Chapters 14 to 16 for range testing and load evaluation, Chapter 18 for bullet stability, Chapter 20 for ballistic solver truing and DOPE cards, and Chapter 22 for terminal ballistics and ethical hunting range.

Chapter 29

Popular Methods Examined

Key points

- Ladder tests, optimal charge weight and velocity nodes look for flat spots with a few shots per step. Random scatter makes flat spots in most tests.
- Nodes found with a few shots rarely hold up when the same loads are fired in large numbers.
- Seating depth matters more for some bullet shapes than others. A small-sample sweep cannot find a sweet spot reliably.
- A tuner does change how a barrel vibrates. Whether that helps by a useful, repeatable amount is still open.

Why it matters

Popular methods spend components and barrel life. Their appeal is speed, an answer from 20 or 30 rounds. Speed is not the problem. The problem is that small samples give confident answers that are often noise. A false node costs you twice. You load for it, and then it fails to repeat.

The verdicts below concern each method as it is usually practiced, with one to five shots per step. Run with enough shots, any of these becomes a fair experiment (see *The Precision Rifle Handbook*, "Testing any claim yourself").

How it is done

> **Safety · See Chapter 2**
> A ladder or an optimal charge weight test fired to find a node is not a work-up. Fire no charge above one you have already reached in a work-up from the published start load (see Chapter 28). Keep every Chapter 28 stop rule at every step.

Contested: ladder tests

The claim. Fire one shot at each of a series of rising charges, usually at long range. The bullets land at different heights. Where several steps in a row land at about the same height, the load is in a node. A charge in the middle of that node forgives small variations. Some shooters read each shot's velocity instead of its height.

The physics. The usual explanation is barrel vibration. The muzzle moves while the bullet travels down the bore. A bullet that exits near a turning point of that motion should be less affected by small changes in exit time. Another proposed explanation is that slower bullets leave the muzzle a little higher, which offsets their extra drop.

The test. Each step has one shot, and each shot carries the load's normal scatter in height and in velocity. Whether a run of steps looks flat depends as much on that scatter as on any node. Here is how often scatter alone makes a step look flat.

Worked example. Example numbers. Not load data.

Take a velocity ladder of ten steps. Each step should add 10 fps. The load's shot-to-shot SD is 8 fps. There is no node at all. Call a step flat if it rises 5 fps or less.

Each step's rise is the gap between two shots that each wander about 8 fps. So the rise itself wanders about 11 fps (8 × √2). A rise that should be 10 fps reads 5 fps or less about one time in three.

A ten-step ladder has nine rises. A computer simulation of a million such ladders shows a flat step in nearly every one. Two flat steps in a row, three shots that look like a plateau, turn up in about 3 ladders in 10.

The data. A ladder that showed a flat spot did not show it again when it was fired a second time.[1] Fired in samples of 20 to 35 shots per step, the nodes disappeared.[2] Separate 30-shot tests in three rifles found no nodes.[3] Lighter charges tended to group tighter.[4]

The verdict. Folklore. One shot per step cannot find a node (see Figure 29-1). A ladder is still the right way to work up for pressure and velocity (see Chapter 28).

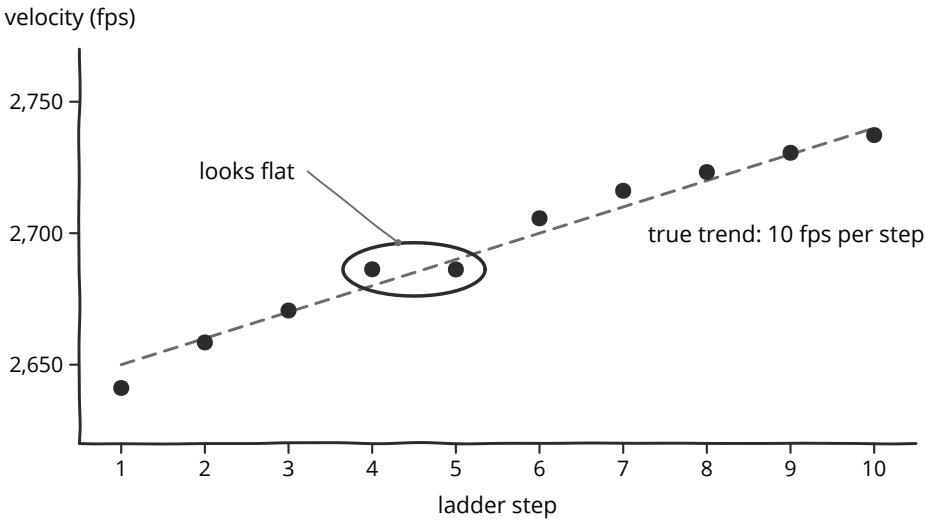

Figure 29-1. A simulated ten-step velocity ladder with no node. Random scatter alone makes a step that looks flat.

Contested: optimal charge weight

The claim. Fire 3-shot groups at a series of charges. Rotate through the charges so each group builds up a shot at a time. Look for three neighboring charges whose groups center on the same point. The middle charge is the optimal charge weight. Its point of impact should not move with small changes in velocity.

The physics. The same barrel-timing idea as the ladder. If the point of impact holds still across a range of charges, small charge and velocity variations should not move the shots.

The test. A 3-shot group's center is uncertain. It wanders from the true center by about the shot spread divided by the square root of three.

```
center wander on one axis = σ ÷ √n
σ on one axis             = mean radius ÷ 1.2533
```

Here is how far a center wanders for one load.

Worked example. Example numbers. Not load data.

A rifle and load with a true mean radius of 0.50 MOA have a σ of 0.50 ÷ 1.2533 = 0.40 MOA on each axis. A 3-shot group's center wanders by 0.40 ÷ √3 = 0.23 MOA. The centers of two groups of the same load then differ with an SD of about 0.33 MOA on each axis. Groups from different charges can line up by chance. Groups from the same charge can look apart.

Group sizes are just as noisy. The best of seven 5-shot groups from one load averages 0.66 times the load's average 5-shot group (see *The Precision Rifle Handbook*). Groups of 3 shots are noisier still.

The data. Large-sample testing found that optimal charge weight results disappeared, as charge nodes did (see "Contested: ladder tests" above).[3] Users of the method disagree. In their view, real effects are large enough to see with few shots.

The verdict. Folklore. You cannot choose a charge from the centers of 3-shot groups. Those centers wander by more than the effect sought (see Figure 29-2). A charge chosen for your velocity goal, with margin, does the same job with less ammunition.

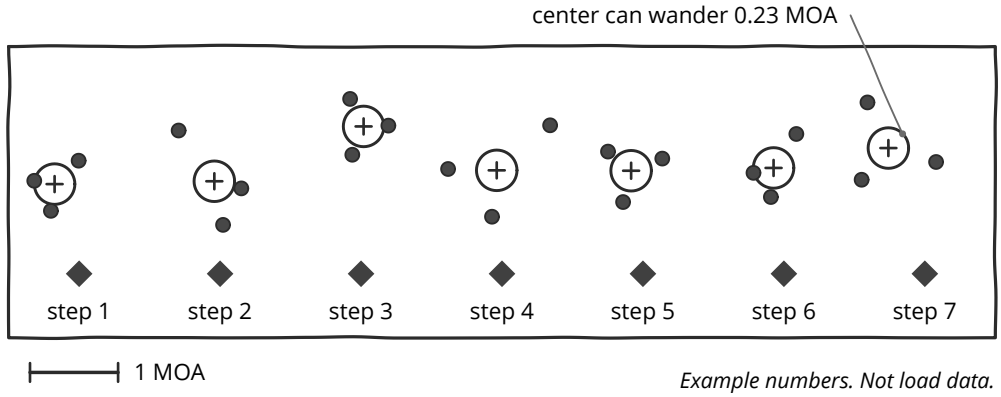

Figure 29-2. An optimal charge weight target. Each charge step has its own aim mark and 3-shot group, with a circle showing how far each group's center can wander.

Contested: velocity nodes

The claim. Somewhere in a load's charge range is a node where velocity barely changes with charge. Loads there give a low velocity SD. Shooters usually look for the node with one shot per step or with short strings.

The physics. Internal ballistics models show velocity rising smoothly as charge rises. A real plateau would need a cause these models do not include.

The test. One shot per step and short strings are both too noisy. In the ladder example above, chance alone makes a flat step in nearly every ladder and a three-shot plateau in

about 3 ladders in 10. A short string's SD is noisy too. A 5-shot SD has a 90 percent interval of 0.65 to 2.37 times the measured value. So a 5-shot SD of 6 fps fits a true SD anywhere from about 4 to 14 fps. Example numbers. Not load data.

The data. Two of the large-sample tests above went back to apparent velocity flat spots with 20 to 35 shots per charge. The flat spots did not hold, and average velocity rose in a nearly straight line with charge.[5]

The verdict. Folklore. One shot per step or a short string cannot find a velocity node. Choose the charge for the velocity you need. Measure its SD with 20 to 30 shots. If the SD is too high, look at ignition, neck tension and charge weighing rather than at 0.1 gr.

Contested: seating depth sweeps

The claim. Each bullet has a seating depth sweet spot. Seat the same load at a series of jumps to the lands, fire a small group at each and pick the best.

The physics. Jump does change things. It changes how the bullet meets the rifling and how hard it is to start moving. Ogive shape changes how much this matters. Some secant-ogive bullets have a sweet spot .030 to .040 inch wide, anywhere from jammed into the lands to .150 inch off them.[6] Hybrid-ogive bullets are much less sensitive.[7] Monolithic bullets need jump (see Chapter 24).[8]

The target also moves: as the throat erodes, the lands move forward and jump grows (see Chapters 24 and 30, and Figures 24-1 and 24-7). Over a few hundred rounds, this movement can shift a bullet completely out of a narrow seating window.

The test. A sweep is a set of loads fired as small groups. It has the same problem as any small-group comparison. Seven settings shot as one 5-shot group each will show a best group about 0.66 times the load's average 5-shot group, even if seating does nothing.

The data. In one large-sample test with 20 to 30 shots per seating depth, the difference between the best and worst depths was small enough to be random noise.[9] Meanwhile, the .030 to .040 inch sweet-spot claim rests on shooter reports without published sample sizes, and its recommended test procedure fires only two 3-shot groups at each of four jumps.[6]

The verdict. Folklore. A small-sample sweep cannot find a sweet spot reliably. Start at the bullet maker's guidance. Never jam a hunting load. Prefer a jump band where groups change little, so throat erosion does not matter. Test seating only with adequate samples.

> **Safety · See Chapter 2**
> A seating change is a load change. Seating deeper takes space from the powder and raises pressure. Seating into the lands raises it too. Before a sweep goes deeper than the published COAL, deeper than your worked-up seating or into the lands, work up again from the start load at that seating (see Chapter 28).

Contested: barrel tuners

The claim. A tuner is a weight on the muzzle that you can move in small steps. Moving it changes how the barrel vibrates, so the bullet leaves at a better moment. It tunes the barrel to the ammunition rather than the ammunition to the barrel. The effect is large enough to see with few shots.[10]

The physics. Mass at the muzzle does change how a barrel vibrates. That much is basic mechanics. The question is whether the change improves dispersion by a useful and repeatable amount.

The test. Tuner settings are compared by their groups. Settings that differ a little need many shots to separate. Settings tested with small groups suffer the same best-of-many luck as any sweep.

The data. One test fired more than 1,800 rounds through four tuners on four rifles.[11] The tuners showed no repeatable effect.[12] Critics fault the test protocol. The objections are that the tuners may have been too light, and that a tuner's weight, position and range of adjustment must suit the barrel and the load.[13] The test also did not check whether slower shots leave the muzzle higher and so offset their extra drop. That would take long-range shooting with every shot tracked by radar.[14] Added weight at the muzzle did seem to shrink groups, a result that needs more testing.[10]

The verdict. Plausible but unproven. The physics is real. Whether the effect is large and repeatable enough to matter is not settled. If you use a tuner, test it with the protocol in *The Precision Rifle Handbook* ("Testing any claim yourself"). Each setting you compare is one arm. With more than two arms the statistical threshold tightens, so each arm needs more shots. To find a 1.5 to 1 difference in group size, three arms need about 45 shots each. Four arms need about 55 and five about 60. For velocity SD, three, four and five arms need about 67, 77 and 84.

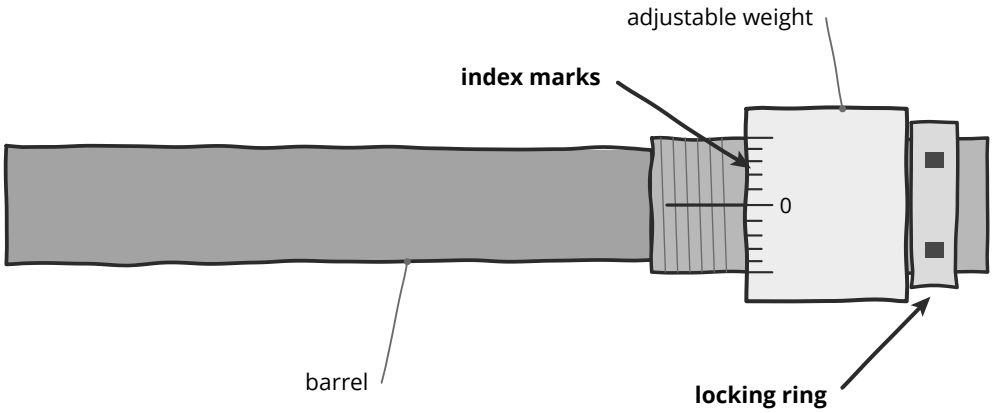

Figure 29-3. A barrel tuner on a rifle muzzle. The adjustable weight and its index marks are visible.

EASIER ON EP · ANALYSIS · STATISTICAL TOOLS

Analysis queues let each ladder step, seating depth or tuner setting grow into a real sample across sessions.

empiricalprecision.com/analysis?tab=queues

Chapter 30

Living With a Load

Key points

- Hold the ammunition at a steady temperature when you fire it, and the velocity you recorded stays true.
- A new lot can change pressure. Your velocity records, not an assumption that it matches, tell you whether it did.
- The throat wears with every shot, so jump and velocity drift over a barrel's life.
- Every change to a component, the rifle or the season reopens a finished load.

Why it matters

A load is not finished when it wins. Seasons change. Powder lots run out. The throat wears a little with every shot. Each change moves velocity, pressure or both. The data you gathered stays true only if you keep checking it.

How it is done

Hold the ammunition temperature

Powders respond to temperature, and each load responds in its own way (see Chapter 13). Measuring that response takes more control than a home range gives. A round warms or cools toward the air as soon as it leaves its box, and a warm chamber heats it further. What you can control is the temperature of each round when you fire it. Keep that temperature steady, and your recorded velocity holds true even if you do not know the powder's exact temperature curve.

> **Safety · See Chapter 2**
> Hot ammunition runs at higher pressure. A vehicle in the sun, a pocket and a warm chamber all count toward the hottest your ammunition will see (see Chapter 28). Never warm ammunition on purpose.

1. Read the ammunition temperature at every session, with a thermometer in the ammunition box (see Chapter 10). Record it with the session (see Chapter 27 and *The Precision Rifle Handbook*, Chapter 13).
2. At the range, keep the ammunition in a closed, insulated box in the shade. Never leave it in the sun, on a dark mat or in a closed vehicle.
3. In the field, carry the rounds in an inside pocket, or in a pack away from the sun. Body heat holds them far steadier than the air around you.
4. Keep the action open until you are ready to fire. Chamber each round only then. In a hold or a cease-fire, unload.
5. If a round sits in a warm chamber before it fires, note it on its shot line before you look at the target (see Chapter 27).

6. Chronograph the load the way you carry it. A hunter's drop chart comes from rounds carried in the pocket, and a competitor's from rounds kept in the shaded box (see *The Precision Rifle Handbook*, Chapter 20).

Evidence · Supported by data
A powder's response to temperature depends on the cartridge, the lot and the rifle, and it is often not a straight line. In one measured powder the slope in the cold was about twice the slope in the heat (see Chapter 13).[1]

Watch for heat

Some heat reaches the rounds however careful you are. Your velocity records show it, with no special test.

In a long string. Barrel and chamber heat climb through a long string, and each round that waits in a warm chamber takes up some of it. In any string of 15 shots or more, compare the mean velocity of the last five shots with the first five. Judge the gap against its noise.

```
noise = SD × √(2 ÷ 5)       SD = the string's velocity SD
A rise of more than twice the noise is heat reaching the rounds.
```

Worked example. Example numbers. Not load data.

A 20-shot string has a velocity SD of 10 fps. Its first five shots average 2,701 fps and its last five average 2,719 fps.

```
noise      = 10 × √(2 ÷ 5) = 6.3 fps
twice that = 12.6 fps
rise       = 2,719 − 2,701 = 18 fps
```

The rise is more than twice the noise, so heat is reaching the rounds (see Figure 30-1). Slow the pace, shorten the strings or keep the action open longer between shots. Fire load tests in interleaved 5-round blocks, so no load meets only the hottest barrel (see *The Precision Rifle Handbook*, Chapter 14).

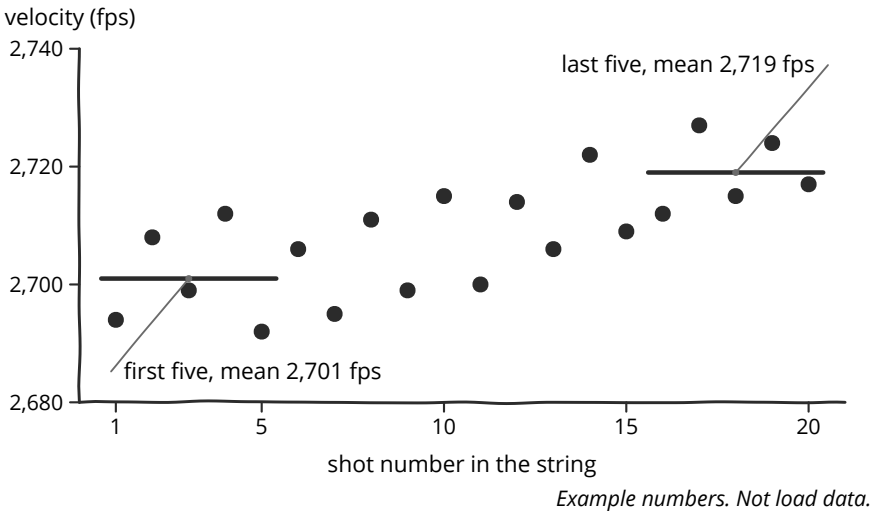

Figure 30-1. Velocity through a 20-shot string. The last five shots average 18 fps faster than the first five, more than twice the noise.

On a hot day. When the ammunition is warmer than it was at the work-up, fire one round alone first and read its velocity. If it reaches your velocity ceiling, the load is too hot for that day. Stop and reduce the charge (see Chapter 28). Any pressure sign means stop now.

On any day far from your records. On a day much hotter or colder than any in your records, compare the session's mean velocity with the record nearest its ammunition temperature. Note the gap in the velocity history (see Chapter 27).

Over a season. The velocity history holds each session's mean velocity and ammunition temperature. Once it spans cold and warm days, it shows how the load responds. Use sessions from one lot, fired after the barrel's first 200 rounds, so lot changes and a new barrel's speed-up stay out. Group the sessions into cold days and warm days and compare their averages.

```
slope = (warm mean − cold mean) ÷ (warm temperature − cold temperature)
        in fps per °F
```

Worked example. Example numbers. Not load data.

Four cold sessions average 2,712 fps with the ammunition at 34 °F. Four warm sessions average 2,748 fps at 78 °F.

```
slope = (2,748 − 2,712) ÷ (78 − 34) = 36 ÷ 44 = 0.82 fps per °F
```

Day-to-day changes in setup and barrel condition add extra scatter beyond single-session shot noise. Trust a calculated temperature slope only after you have several sessions at both cold and warm temperatures, and apply it only within the temperature span you have measured. Use a measured slope to increase the 1 fps per °F heat margin from Chapter 28 if needed, never to reduce it.

EASIER ON EP · VARYTITA · EXTERNAL BALLISTICS

Varytita adjusts a velocity measured on another day to today's powder temperature, with the slope you choose, and gives the drop chart for today.

empiricalprecision.com/heurisko?tab=varytita

Powder lot changes

Powder is made in lots, and two lots of the same powder can burn at slightly different rates. With modern powders the difference is usually small. Your chronograph shows it.

Safety · See Chapter 2

A new component lot can change pressure, and a velocity check is your safeguard. In percentage terms, changing the powder charge moves pressure about 3 times as much as velocity, and swapping the primer can move pressure 10 times as much or more.[2] A velocity rise at the same charge is a clear warning of higher pressure. Act on what you measure, and never assume a new lot matches the old.

1. When you can, buy enough of one lot for the life of a load.
2. Record the lot number with every load.

3. Do not assume the new lot is different. Do not assume it is the same. Test it.
4. Load new-lot and old-lot rounds at the same charge: your current charge, or one step lower if it sits at or near the published maximum. Load 10 rounds of each lot.
5. Fire new-lot rounds interleaved with old-lot rounds in one session. If the old lot is gone, compare with the velocity in your records at that same charge, for the same rifle and similar conditions.
6. Judge the difference against its noise: $\sqrt{(\text{old SD}^2 \div \text{old shots} + \text{new SD}^2 \div \text{new shots})}$, in fps. A difference under about twice the noise is not shown to be real. A larger one probably is (the barrel-wear example below works the same sum). With 10 shots of each lot and SDs of 9 and 10 fps, the noise is $\sqrt{(8.1 + 10.0)} = 4.25$ fps, and twice the noise is 8.5 fps. Example numbers. Not load data.
7. If the new lot's mean velocity exceeds the old lot's by more than twice the noise from step 6, the velocity rise (and the pressure rise behind it) is real. Reduce the charge and work up again from below. If you tested one step below a near-maximum charge and saw no real velocity rise, step up to your working charge while respecting your velocity ceiling (see Chapter 28). If velocity dropped by more than twice the noise, the new lot burns slower. If you adjust the charge upward to restore velocity, never exceed the published maximum charge or your velocity ceiling, whichever comes first.
8. Confirm the new-lot load with 20 to 30 shots before you rely on it at long range.

Barrel wear, velocity drift and the lands

Every shot erodes the throat a little, and the lands move forward (see Chapter 24). At a fixed CBTO the jump grows as far as the lands move.

Keep an accurate round count for the barrel. Re-measure the distance to the lands at regular intervals. Use the same tool and the same technique every time (see Chapter 24).

Decide in advance how you will handle the moving lands. You can chase them, seating the bullet longer to keep the jump the same. Or you can keep a fixed CBTO and let the jump grow. A load developed in a wide, flat jump band usually tolerates moderate throat erosion without losing precision. If you seat longer to follow the lands, check that the longer round still fits the magazine and feeds reliably.

Worked example. Example numbers. Not load data.

At the rate measured in 6 and 6.5 mm barrels, .004 to .007 inch per 100 rounds (see Chapter 24), the lands move .016 to .028 inch over 400 rounds. A load seated .020 inch off the lands at the start could then be .036 to .048 inch off.

Velocity also drifts over a barrel's life. Many new barrels speed up over their first 100 to 200 rounds. The rise varies from barrel to barrel, and one measured rise was about 80 fps.[3] A load worked up to your velocity ceiling in a new barrel can pass it as the barrel speeds up. Through the first 200 rounds, check its velocity against the ceiling. If it reaches the ceiling, drop the charge and work up again (see Chapter 28).

Later, as the throat erodes toward the end of the barrel's accurate life, velocity usually falls.[4] How fast it falls varies too. Track the mean velocity from session to session. Compare each session only with sessions fired at a similar ammunition temperature, and check the change against its noise before you blame wear.

Worked example. Example numbers. Not load data.

Your recorded velocity is 2,744 fps from 30 shots, with the ammunition at 62 °F and an SD of 9 fps. The barrel has now fired 2,600 rounds. Today, with the ammunition held at 60 °F, 10 shots average 2,722 fps with an SD of 10 fps. Is the barrel slowing down?

```
noise = √( (9 ÷ √30)² + (10 ÷ √10)² )
      = √(1.64² + 3.16²) = 3.6 fps
drop  = 2,744 − 2,722 = 22 fps, about 6 times the noise
```

The ammunition was held within 2 °F of the record, so temperature cannot explain a 22 fps drop. The drop is real. Before you blame wear, rule out a new lot and the chronograph setup (see Chapter 31). Had today's ammunition been 25 °F colder, this comparison would say nothing about wear. Compare such a day with a session near its own temperature instead (see Figure 30-2).

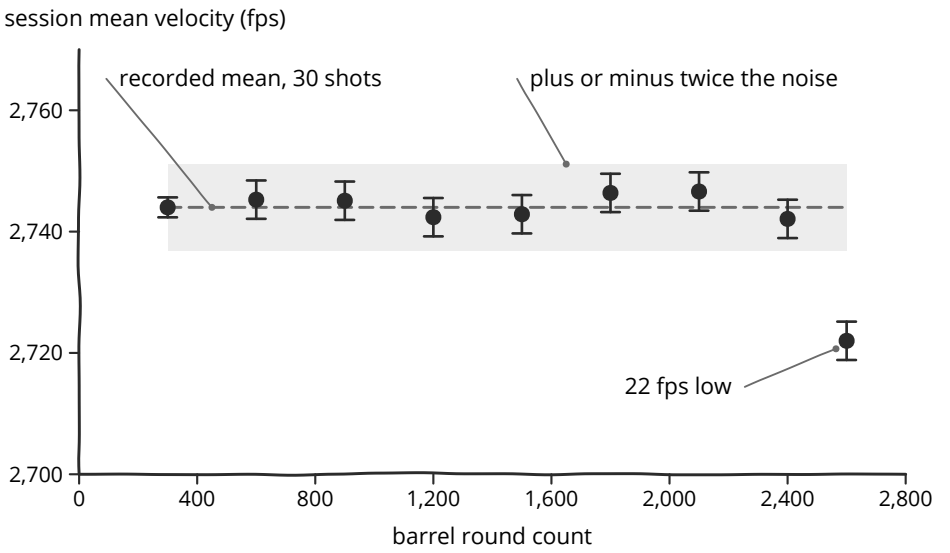

Figure 30-2. Session mean velocity against barrel round count, for sessions fired at a similar ammunition temperature. The latest session falls below the band of twice the noise.

EASIER ON EP · ANALYSIS · STATISTICAL TOOLS

Analysis checks a session's average velocity against this rifle's other sessions of the same load, carried to that session's temperature, and names any lot those sessions did not fire.

empiricalprecision.com/analysis

When to re-test

Re-test when one of these changes:

Change	What to do
New primer, case maker, bullet or powder	Work up again (see Chapter 28). Confirm with 20 to 30 shots.
New lot of the same component	Load 10 check rounds at your current charge, or one step lower if it sits at or near the published maximum. Compare their velocity with your records. If the new lot runs faster by more than twice the noise, lower the charge and work up again from below (see "Powder lot changes" above). Load in bulk only after the check.
New scope, rings, stock or trigger	Start a new baseline (see Chapter 3 and *The Precision Rifle Handbook*, Chapter 14).
New barrel or a changed barrel length	Start over: new lands, new baseline and a new work-up.
Velocity drift beyond noise and temperature	Look for the cause. Re-measure the lands.
Lands moved out of your jump band	Re-seat and confirm with 20 to 30 shots.
Seating deeper than your worked-up seating, or into the lands	Work up again from the start load at that seating (see Chapter 28).
A new season	Re-check your zero and drop chart (see *The Precision Rifle Handbook*, Chapters 10 and 20).

Chapter 31

Troubleshooting

Key points

- Unusual force is a symptom. More force is never the fix. A pressure sign is never noise, and its absence is not proof of safety.
- Each fault starts at one step. Measuring shows which, and only one change at a time shows what fixed it.
- Some defects end a case's life: a head separation ring, a split or a loose primer pocket.
- Small samples mislead, so many range faults are only noise. Judge stringing and far shots against chance.
- Vertical stringing is a velocity problem only when the slow shots are the low ones. At 100 yards it almost never is.

Why it matters

Workshop faults cost brass and time. Some cost safety. A stuck case ends a loading session. A case near head separation can fail in the chamber. A round that will not chamber wastes a trip to the range. A fault at the range costs more. It costs ammunition, barrel life and trust in your own data.

Most workshop faults have simple causes. The skill is finding the step that caused them before you change anything. A fix that changes two things at once teaches you nothing. If the fault comes back, you will not know which change mattered. At the range, some faults are real and others are noise from too few shots. The skill is telling the two apart. One fault is never noise: a pressure sign.

How it is done

Problems in the workshop

1. Stop at the first sign of trouble. Unusual force, a new sound or a strange mark is enough. More force is almost never the right answer.[1]
2. Set the case or round aside and mark it. Keep it out of the batch.
3. Find the step where the fault appears. Measure the case before and after that step. Discard any case with a safety defect. Do not try to save it.
4. Find the symptom in the table below. Check the likely causes in the order given.
5. Change one thing. Re-measure five to ten cases.
6. Record what you changed and what you measured.

Symptom	Likely causes	Check	Fix	See
Bright ring above the web, or a probe catches inside the case	Incipient head separation. Usually too much shoulder bump over several firings.	Look for the ring. Slide a bent-wire probe to the bottom and draw it up the inside wall.[2]	Discard the case and crush its neck.[3] Probe the rest of the batch. Reset the die for the right bump and track firings.	18, 19, 26
Split neck or mouth	Brass work-hardened by many firings.	Inspect every case after sizing.	Discard split cases. Annealing extends neck life.	18, 21
Case sticks in the sizing die	Too little lube. Lube missed part of the case. A dirty die.	Look at the lube on the next few cases. Look inside the die for buildup.	Stop. Do not force the handle. Use a stuck-case remover made for the die (see Chapter 5). Lube every case.	19
Dents in the shoulder after sizing	Too much lube trapped between case and die. A blocked vent hole in the die.	Wipe a case and look at the shoulder. Look at the die's vent hole.	Clean the die with a swab or brush. Use less lube. Small dents fire out.[4] Discard a case with a collapsed shoulder.	18, 19
Shoulder bump varies from case to case	Inconsistent measuring. Mixed lots, makers or firing counts (springback varies with hardness).[5] Uneven lube. The press not reaching the same stop on each stroke.	Measure one case three times. Then measure cases from one batch only (see Chapter 18).	Size one lot and one firing count together. Lube evenly. Set the die by measurement.	19
Trimmed lengths vary, or a burr or ridge is left on the mouth	A trimming, deburring or chamfering fault.	Measure a few trimmed cases. Look at the mouth inside and out.	Check the trimming and chamfering fault table in Chapter 20.	20
Primer hard to seat	Crimped military primer pocket. Wrong primer size. Primer tipped on its side. Residue in the pocket.	Look for a crimp ring around the pocket. Compare the primer with the pocket size.	Stop. Do not force it.[6] Remove the crimp with a swaging or reaming tool. Clean the pocket. Use the right primer size.	22
Primer seats with almost no effort	Pocket stretched by many firings or by high pressure.	Feel each seat. Mark cases that feel loose.	Discard the case. Several loose pockets after only a few firings mean the pressure is too high: reduce the charge.[7]	22, 28
Primer sits above flush	Not seated fully. Primer tipped or upside down (risks a slam fire in a semi-automatic).[8]	Run a fingertip or a straightedge across the case head.	Not seated fully: reseat it with the same steady stroke, and stop at any resistance. Tipped or upside down: do not push it. Set the case aside.	22, 26

Symptom	Likely causes	Check	Fix	See
Scale reading drifts	Scale not warmed up or zeroed. Drafts, vibration or a change in room temperature.[9]	Weigh check weights at the start and during the session.	Stop charging until the scale passes its check weights. Re-weigh the charges weighed since the last good check. Warm up the scale as its maker directs and zero it. Shield it from drafts. Recalibrate after a change in room temperature.	23
Powder bridges or will not settle	Long extruded kernels in a narrow neck or funnel. Pouring too fast. A charge near a full case.	Watch the powder go in. Weigh a few thrown charges. Compare the fill with the published load.	Pour slowly, tap the case or use a drop tube (see Chapter 8).[10] Weigh every charge for a work-up or a precision load. Find out why a published charge will not fit.	8, 13, 23
Shoulder crushed or bulged after seating	Neck too tight for the bullet. Mouth not chamfered. Crimp set too heavy.[11] Cases of uneven length.	Feel the seating force. Look at the chamfer. Check the crimp setting. Measure case lengths.	Chamfer the mouth. Reduce neck tension. Reduce the crimp, or skip it for a load that does not need one. Trim to one length.	19, 20, 24, 26
Seating depth (CBTO) wanders	Measuring technique. Seater stem pushing on the tip instead of the ogive. Neck tension that varies. A compressed charge pushing back.[12]	Measure CBTO and COAL on ten rounds. Look for a ring mark on the bullet tips (see Figure 31-1).	Use a stem that fits the ogive (see Chapter 5). Even out neck tension. Judge seating by CBTO, not COAL. Reseat grown compressed rounds to your CBTO before you shoot them.	13, 24, 25
High runout on loaded rounds	Neck walls of uneven thickness. The expander pulling the neck off center. A bullet started crooked.	Check runout on the fired case, sized empty neck and loaded round.	Lube inside the neck. Expand while the die supports the neck or as a separate step. Try a seater that guides the bullet in a sleeve (see Chapter 5).[13]	9, 19, 24
Loaded round will not chamber, or the bolt closes hard on it	Shoulder not bumped enough. A semi-automatic needs more bump than a bolt action. Case too long. Bullet touching the lands. Shoulder bulged in seating.	Case gauge or chamber check. Base-to-shoulder against fired brass. Case length. CBTO against your measured lands.	Stop. Do not force the bolt on a live round. Pull the bullet from any round that fails the gauge. Then reset the die for the right bump, trim, or seat to a measured jump. Seating deeper than the published COAL or than your worked-up seating raises pressure, so work up again.	19, 20, 24, 25, 26, 28

Problems at the range

1. Stop at once at a pressure sign or at a shot that sounds or feels wrong. After a wrong shot, unload and check the bore for a stuck bullet before you fire again (see Chapter 2). If a round fails to fire, keep the muzzle downrange for at least 30 seconds before you open the action.[14] Everything else can wait. Pressure signs are unreliable early warnings, and their absence does not prove a load safe (see Chapter 28).

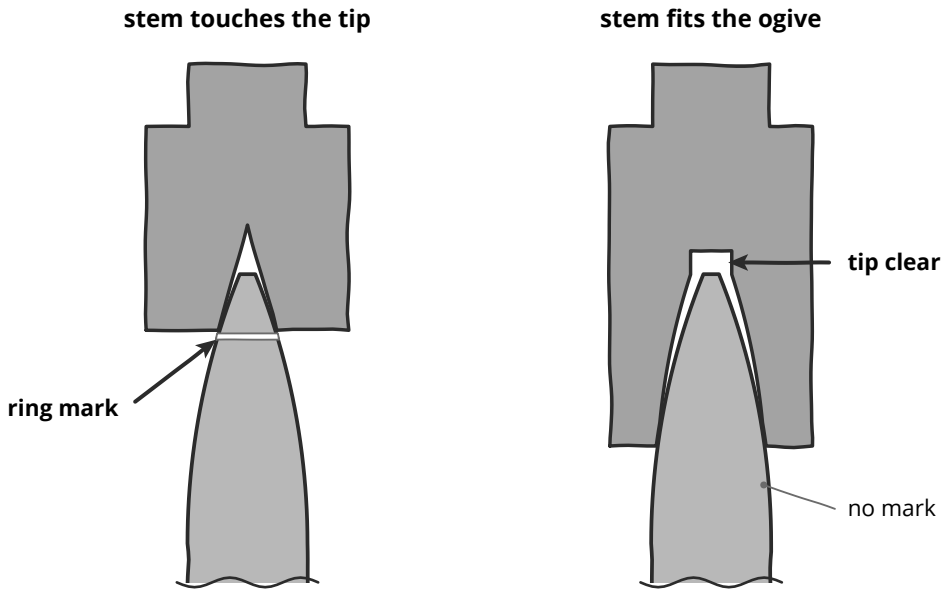

Figure 31-1. A seater stem that touches the bullet's tip leaves a ring mark. A stem that fits the ogive does not.

2. Look at the target. A flyer may be a hole marked in the wrong place or a shot you pulled.
3. Count your shots. Read every number with its interval.
4. Find the symptom in the table below. Change one thing. Then shoot enough rounds to see whether the change worked (see *The Precision Rifle Handbook*, Chapters 15 and 16).
5. Record the conditions, the change and the result.

The table below focuses on pressure signs, function-test faults, and common range diagnostics. Extended external-ballistics, optic, and long-range diagnostics live in *The Precision Rifle Handbook*. In the See column, numbers refer to chapters in this handbook, and PRH refers to *The Precision Rifle Handbook*.

Symptom	Likely causes	Check	Fix	See
Pressure signs: stiff bolt lift, ejector marks, flattened, cratered or pierced primers	Charge too high for this rifle. Components differ from the published test. Bullet in the lands or seated deeper than tested. Hot ammunition. Wrong powder. Bolt-action data used in a semi-automatic.	Stop firing. Then compare components, charge and velocity with the published data. In a semi-automatic, compare ejector and extractor marks with those at the start load. A primer sign means stop.	Do not fire the rest of the lot. Pull the bullets from it. Work up again from the published start load.	25, 26, 28
A shot sounds or feels weak	A light or missing charge (a squib) can leave the bullet in the bore.	Unload. Look through the bore for a stuck bullet.	Do not fire until the bore is clear. Pull the rest of that batch and check its charges.	2, 23

Symptom	Likely causes	Check	Fix	See
Click, no bang (a misfire)	A primer seated high or upside down. A light firing-pin strike. A contaminated primer.	The primer's dent, and how the primer sat.	Keep the muzzle downrange for at least 30 seconds, then unload. Pull the round as a reject. Have the rifle checked if the primer is not dented. Check that the bore is clear before you load another round.[15]	2, 22, 25
Velocity at or over your velocity ceiling, or well above your records at the same temperature	Hot ammunition. A new lot. A new barrel speeding up. A charge or component error.	Ammunition temperature, the lots, the barrel's round count and the batch record.	Stop firing that batch and pull its bullets. For a charge or component error, work up again from the published start load. For a new lot, a new barrel or hot ammunition, drop the charge and work up from below to your velocity ceiling (see Chapter 30).	28, 30
Carbon ring: velocity climbs, SD worsens, or groups open at high round count	Hard carbon buildup at the front of the chamber neck pinching the case mouth on firing.	Inspect the neck-throat junction with a borescope, or feel for a tight spot with a sized brush. Check velocity history for an upward creep.	Clean the throat deliberately with carbon solvent and a properly sized nylon or bronze brush. Re-check velocity and groups, and tighten your throat-cleaning cadence.	30, PRH 23
Velocity SD higher than expected	Too few shots. Uneven charges or neck tension. Low case fill with a ball powder. Chronograph error.	The shot count and the SD's interval. The per-shot log.	Shoot more before you judge. Fix the cause in the workshop. Prefer a Doppler chronograph.	10, 13, 19, 23, PRH
One shot far slower or faster than the rest	Erratic ignition or inconsistent neck tension. A chronograph misread. A blown primer.	Find the shot in the log. Inspect that case.	A blown primer is a pressure sign: stop. Otherwise fix the cause in the workshop. Keep the reading unless the misread is documented.	28, PRH
Vertical stringing	Velocity spread, at long range. Barrel heat. Uneven primer strikes from a weak firing-pin spring. A barrel touching the stock. Position or rest.	Vertical spread against horizontal. Velocity against shot height.	If the slow shots are low, work on velocity SD. If not, look at the rifle, the rest and the heat.	3, PRH
Horizontal stringing	Wind, bipod or trigger push.	Horizontal spread against vertical. Your wind notes.	Shoot in steadier wind. Check how you load the bipod and press the trigger.	PRH
A flyer	A pulled shot. A hole marked in the wrong place. The normal tail of the group. A loose scope mount.	Look at the hole. Read your shot notes.	Keep it unless you documented the error when it happened.	PRH

Symptom	Likely causes	Check	Fix	See
Groups much larger or smaller than last time	Small samples. A change between groups in heat, wind, position or rest.	The shot count. The mean radius interval.	Composite more groups before you decide.	1, PRH
Velocity climbs through a string	Barrel and chamber heat. A round left in a hot chamber.	The per-shot log in firing order.	Pace your shots. Do not leave a round in a hot chamber.	3, 30
Point of impact moves between sessions	Temperature. Elevation. Storage humidity.[16] A hardware change.	Where the group prints, its velocity and the air for each session. The scope mounts.	Record the air every session. Treat a hardware change as a new baseline. Hold the ammunition at a steady temperature.	3, 13, 30, PRH
Keyholes or oblong holes	Bullet not stable in this twist.[17]	Stability in the coldest, densest air you expect.	Choose a shorter bullet or a faster twist. A hotter load will not fix it.	14, PRH
Drops match up close and miss far out	A wrong muzzle velocity, which short ranges hide. An optimistic BC, or a BC in the wrong drag model.[18]	That the BC and the drag model match. The measured velocity.	True the velocity first, then the drag.	PRH

Stringing

Compare the spread up and down with the spread side to side. Vertical much larger than horizontal is vertical stringing. Suspect velocity spread or uneven primer strikes from a weak firing-pin spring. A barrel touching the stock does it too (see Chapter 3). Horizontal much larger than vertical points at wind, the bipod or trigger push.

Judge stringing against chance, not against a fixed ratio. A rule that calls a group strung whenever one axis is 1.5 times the other would call almost half of all round 5-shot groups strung.[19] Use the lines in Table 31-1 instead. A round group is then called strung about 1 time in 20.

1. Find SD horizontal and SD vertical from the group's center, as in the mean radius worked example (see *The Precision Rifle Handbook*, Chapter 15).
2. Divide the larger SD by the smaller.
3. Call the group strung only when the ratio reaches the line for your shots.

For a composite, measure each shot from its own group's center. Then divide each sum of squares by the shots minus the number of groups, not by the shots minus 1.

Table 31-1. When to call a group strung, and when to call velocity linked to height.

Shots	Strung when the larger SD ÷ the smaller SD reaches	Velocity linked to height when the correlation reaches
One 5-shot group	3.10	.88
Two 5-shot groups	2.11	.67
One 10-shot group	2.01	.63

Shots	Strung when the larger SD ÷ the smaller SD reaches	Velocity linked to height when the correlation reaches
One 20-shot group	1.59	.44
Four 5-shot groups	1.66	.48
Six 5-shot groups	1.51	.40

The ratio lines come from the F-test on two SDs, applied to the two axes. Both columns are two-sided lines at 0.05. Test a load's composite once, not each group in turn. Each extra test is another chance for luck (see *The Precision Rifle Handbook*, Chapter 16).

Worked example. Example numbers. Not load data.

The 10-shot group in *The Precision Rifle Handbook*, Chapter 15, has an SD of .33 inch across and .25 inch up and down. The ratio is .33 ÷ .25 = 1.3, well short of 2.01. That group is not strung.

Next, ask whether velocity is causing the vertical.

1. Take each shot's velocity from the string's average (dv) and its height from the group's center (dh). In a composite, take both from each group's own averages.
2. Work out the correlation between the two. CORREL of the two columns in a spreadsheet gives the same number.

```
correlation = Σ(dv × dh) ÷ √(Σdv² × Σdh²)
```

3. If the correlation is positive and reaches the line in Table 31-1, the slow shots are the low ones. Velocity is moving your vertical, and a lower SD will tighten it. Below the line, a lower SD is not shown to help this group.

Distance matters a great deal here. Take a 140 gr 6.5 Creedmoor load at 2,700 fps. Example numbers. Not load data. There, 10 fps of velocity moves the bullet about .18 inch at 300 yards. At 1,000 yards it moves it about 3 inches.[20] At 100 yards velocity explains almost none of the vertical.[19] Look at the rifle, the rest and the barrel heat first.

Check the drop from gravity, not only the correlation. A positive correlation alone does not mean velocity caused a shot to land low. In a short string, a slow shot can happen to land low purely by chance, producing a high correlation coefficient (r). Always check the physical drop against what gravity actually does.

The change in bullet drop from a velocity change Δv is:

```
drop change = drop(v + Δv) − drop(v)
```

or approximately from time of flight t and total gravity drop from the bore axis y:

```
drop change ≈ −2 × y × (Δv ÷ v)
```

At 100 yards with the example 6.5 Creedmoor load, a shot 20 fps slow has its gravity drop increased by only about .04 inch. If that shot printed .75 inch below the group center, velocity explains only .04 inch of that displacement (about 5 percent). The other .71 inch came from rifle dispersion, aim, cant or rest movement. When the observed vertical

displacement is several times larger than the ballistic drop, velocity did not cause the vertical error, even if the correlation happens to be positive.

This is also why real groups almost always remain circular. If velocity variation were a primary driver of vertical dispersion, targets would routinely stretch into vertical ellipses. When your vertical and horizontal spreads are roughly equal (the ratio in Table 31-1 is below the line), velocity variation is not the limiting factor.

From neck tension to the target. You can apply the same correlation formula to test the full chain: neck tension (or seating force) to muzzle velocity, and velocity to target height. If you log seating force in the workshop and match each round to its chronograph reading, compute the correlation between seating force and velocity. You will usually find very little correlation across normal neck interference. And because velocity explains very little vertical dispersion inside 300 to 600 yards, neck tension variation rarely reaches the target at all.

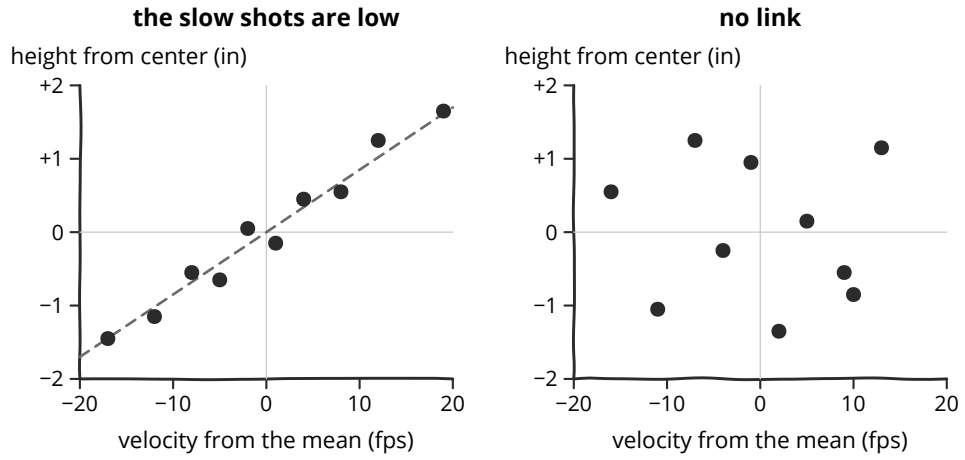

Example numbers. Not load data.

Figure 31-2. Velocity against height for two targets. On one the slow shots are the low ones. On the other there is no link.

EASIER ON EP · **ANALYSIS · STATISTICAL TOOLS**

Analysis flags stringing only when it exceeds chance, tests whether slow shots land low, and flies the load to your target distance to show how much vertical spread gravity actually explains. If you record seating forces, Analysis also tests whether seating force correlates with velocity.

empiricalprecision.com/analysis

Flyers

Every shot counts once you commit to the target (see *The Precision Rifle Handbook*, Chapter 14). A shot that looks far out is often just the normal tail of the group. In a round group about 14 shots in 100 land beyond two standard deviations of the center, so a 30-shot composite will hold about four (see Figure 31-3).

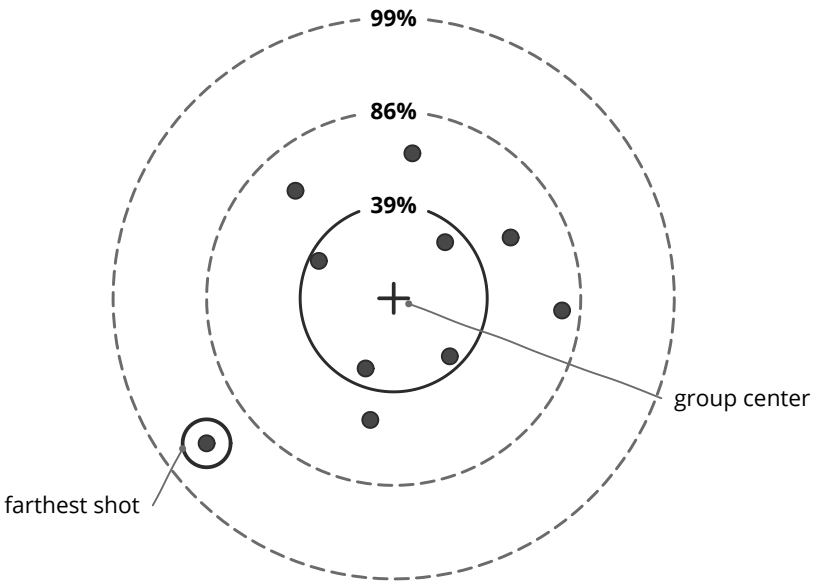

Example numbers. Not load data.

Figure 31-3. A 10-shot group with its farthest shot, and the rings that hold 39, 86 and 99 percent of shots.

Compare a suspected flyer against the average distance of the remaining shots. Leaving the farthest shot out of that average keeps it from inflating the yardstick used to judge it.

1. Take each shot's distance from the group's center, as in the mean radius worked example (see *The Precision Rifle Handbook*, Chapter 15).
2. Average the distances of all the shots except the farthest one.
3. Divide the farthest shot's distance by that average.
4. Call it a far shot, a flyer worth a look, only when the ratio is above 3.

That line holds for one group of 5 to 30 shots. For a composite, measure each shot from its own group's center and test the farthest shot once against all the others. The line of 3 still holds. Even then, about 1 clean target in 20 shows a far shot by chance. A far shot is a reason to look for a cause, such as a loose scope mount. Keep it in the record unless you documented the error when it happened.

Worked example. Example numbers. Not load data.

In the example in *The Precision Rifle Handbook*, Chapter 15, the farthest shot is shot 9, at .711 inch from the center. The other nine add to 2.888 inches, an average of .321 inch. The ratio is .711 ÷ .321 = 2.2, under 3. Shot 9 is the normal tail of the group.

EASIER ON EP · ANALYSIS · STATISTICAL TOOLS

Analysis checks a group or a whole composite for a flyer once, judging each shot from its own group's center against the spread of all the others, and names a shot that stands out.

empiricalprecision.com/analysis

Common questions

Question	Short answer	See
What makes a good first load?	A full-case load, whose published maximum charge fills the case so a double charge cannot fit.	13
Should I work up the charge or the seating depth first?	The charge, with the bullet seated to the maker's guidance. Test seating after that, with enough shots to see a real change.	24, 28
What velocity SD is good enough?	It depends on your distance and target. Inside about 300 yards a 15 fps SD adds only about .3 inch of vertical.	PRH
How many shots do I need?	Five shots can rule out a bad load. Proving a good one takes a composite of 20 to 30 shots.	1, PRH
Should I measure CBTO or COAL?	Both. Use CBTO, never COAL, for seating tests.[21] COAL must still fit your magazine for rounds fed from it.	24
How far off the lands should I seat?	Start at the bullet maker's guidance. Do not jam a hunting load.	24
Why is my velocity different from the book?	Your rifle is not the test barrel. Velocity above your velocity ceiling means pressure above the book's.[22] The ceiling is the book velocity at the maximum charge, lowered for a shorter barrel and never raised for a longer one.	3, 15, 16, 28
Is annealing needed?	Not for safety. It mainly extends neck life. A benefit on target is unproven at large sample sizes.	21, PRH
Does neck tension matter?	Less than many loaders expect. In live-fire tests it had no link to group size unless heavy enough to damage bullets.[23] Keep one method of setting it across the lot.	19
Is sorting brass by weight or uniforming primer pockets worth it?	The evidence is thin. Case capacity drives pressure, so measure your brass's capacity.	11, 16, 22
Do pressure signs tell me a load is safe?	No. A sign means stop now. Their absence proves nothing, so check velocity against the book.	28
When do I have to work up again?	After any change of primer, case maker, bullet or powder, after seating deeper than your worked-up seating or into the lands, and with a new barrel or a changed barrel length.	2, 28, 30
My load shot a tiny group last week and a big one today. What changed?	Maybe nothing. Of two 5-shot groups from one load, one is at least 1.5 times the other 30 percent of the time.	1, PRH
What changes when I load for a semi-automatic?	Bump the shoulder more, check every round in a case gauge, seat every primer below flush and choose powder for gas port pressure.	26
Can I load a cartridge with no published data?	Proceed with extreme caution, because there is no tested start load. An improved cartridge starts from its parent cartridge's data, and a wildcat starts below a smaller-capacity comparison cartridge. To load near maximum pressure, send rounds to a test lab for pressure testing.	16, 28

Part VII

Projectile Directory

.224 Caliber (5.56mm) — 173 Projectiles

Bore 0.219" (5.56 mm) • Groove / bullet 0.224" (5.69 mm) • 30 gr to 95 gr

S.D. = sectional density. † = BC converted between G1 and G7 or computed from bullet geometry rather than published or measured.

Weight	Maker	Projectile	Base	Length	S.D.	G1 BC	G7 BC
30 gr	Barnes	Varmint Grenade FB	FB	0.555"	0.085	**0.097†**	**0.049†**
30 gr	Berger	FB Varmint	FB	0.500"	0.085	**0.120†**	**0.061†**
30 gr	Speer	TNT	FB	0.475"	0.085	**0.088**	**0.044**
33 gr	Speer	Hornet HP	FB	0.438"	0.094	**0.077†**	**0.039†**
35 gr	Hornady	V-MAX	FB	0.516"	0.100	**0.108†**	**0.055†**
35 gr	Hornady	NTX	BT	0.725"	0.100	**0.180†**	**0.091†**
35 gr	Nosler	Ballistic Tip Lead Free	FB	0.730"	0.100	**0.187†**	**0.095†**
36 gr	Barnes	Varmint Grenade FB	FB	0.694"	0.102	**0.144†**	**0.073†**
40 gr	Barnes	Varminator FB	FB	0.605"	0.114	**0.156†**	**0.079†**
40 gr	Berger	FB Varmint	FB	0.605"	0.114	**0.150**	**0.076**
40 gr	Hornady	JET	FB	0.439"	0.114	**0.101**	**0.051**
40 gr	Hornady	V-MAX	BT	0.686"	0.114	**0.177**	**0.089**
40 gr	Nosler	Ballistic Tip Lead Free	FB	0.783"	0.114	**0.204†**	**0.103†**
40 gr	Nosler	Ballistic Tip Varmint	BT	0.701"	0.114	**0.205†**	**0.104†**
40 gr	Nosler	Varmageddon	FB	0.665"	0.114	**0.196†**	**0.099†**
40 gr	Sierra	BlitzKing	FB	0.677"	0.114	**0.178†**	**0.090†**
40 gr	Sierra	Hornet	FB	0.490"	0.114	**0.114**	**0.058**
40 gr	Sierra	VarmintKing HP	FB	0.564"	0.114	**0.151†**	**0.076†**
40 gr	Speer	Spire SP	FB	0.495"	0.114	**0.139†**	**0.070†**
43 gr	Speer	TNT Green	BT	0.579"	0.122	**0.145†**	**0.073†**
45 gr	Nosler	Hornet	FB	0.562"	0.128	**0.134**	**0.068**
45 gr	Barnes	Banded Spitzer BT	FB	0.757"	0.128	**0.188†**	**0.095†**
45 gr	Barnes	TSX FB	FB	0.705"	0.128	**0.181†**	**0.092†**
45 gr	Hornady	HP Bee	FB	0.504"	0.128	**0.105†**	**0.053†**
45 gr	Hornady	Hornet	FB	0.590"	0.128	**0.196†**	**0.099†**
45 gr	Sierra	Hornet	FB	0.537"	0.128	**0.129**	**0.065**
45 gr	Sierra	Pro-Hunter SP	FB	0.585"	0.128	**0.163†**	**0.082†**
45 gr	Sierra	VarmintKing Spitzer	FB	0.625"	0.128	**0.197†**	**0.100†**
45 gr	Speer	Spitzer SP	FB	0.570"	0.128	**0.138†**	**0.070†**
46 gr	Speer	JFP (Jacketed FP)	FB	0.543"	0.131	**0.091**	**0.046**
46 gr	Speer	Soft Point	FB	0.483"	0.131	**0.084**	**0.042**
50 gr	Hornady	CX	BT	0.771"	0.142	**0.159†**	**0.081†**
50 gr	Barnes	TSX FB	FB	0.736"	0.142	**0.190†**	**0.096†**
50 gr	Barnes	TTSX FB	FB	0.807"	0.142	**0.203†**	**0.103†**
50 gr	Barnes	Varminator FB	FB	0.708"	0.142	**0.185†**	**0.094†**
50 gr	Barnes	Varmint Grenade FB	FB	0.846"	0.142	**0.176†**	**0.089†**
50 gr	Barnes	XLC	BT	0.816"	0.142	**0.208†**	**0.105†**
50 gr	Berger	FB Varmint	FB	0.700"	0.142	**0.192**	**0.097**
50 gr	Hornady	ECX	FB	0.720"	0.142	**0.159†**	**0.081†**
50 gr	Hornady	GMX	BT	0.771"	0.142	**0.209†**	**0.106†**
50 gr	Hornady	SP SX	FB	0.646"	0.142	**0.208†**	**0.105†**

.224 Caliber (5.56mm) (continued)

Weight	Maker	Projectile	Base	Length	S.D.	G1 BC	G7 BC
50 gr	Hornady	V-MAX	BT	0.772"	0.142	**0.221**	**0.112**
50 gr	Lapua	Naturalis	BT	0.900"	0.142	**0.190†**	**0.096†**
50 gr	Nosler	Ballistic Tip Varmint	BT	0.800"	0.142	**0.221†**	**0.112†**
50 gr	Nosler	Varmageddon	FB	0.665"	0.142	**0.221†**	**0.112†**
50 gr	Remington	PSP	FB	0.638"	0.142	**0.169†**	**0.085†**
50 gr	Sierra	BlitzKing	FB	0.786"	0.142	**0.234†**	**0.118†**
50 gr	Sierra	Pro-Hunter SP	FB	0.639"	0.142	**0.187†**	**0.095†**
50 gr	Sierra	Spitzer Blitz	FB	0.656"	0.142	**0.214†**	**0.108†**
50 gr	Sierra	VarmintKing Spitzer	FB	0.682"	0.142	**0.214†**	**0.108†**
50 gr	Speer	Spitzer SP	FB	0.620"	0.142	**0.200†**	**0.101†**
50 gr	Speer	TNT Green	FB	0.650"	0.142	**0.183†**	**0.093†**
50 gr	Speer	TNT HP	FB	0.690"	0.142	**0.220†**	**0.111†**
50 gr	Hornady	InterLock SP	FB	0.661"	0.142	**0.208†**	**0.105†**
51 gr	Lapua	HPCE G494	FB	0.724"	0.145	**0.213†**	**0.108†**
52 gr	Barnes	Match Burner FB	FB	0.707"	0.148	**0.217**	**0.110**
52 gr	Berger	FB Target	FB	0.723"	0.148	**0.237†**	**0.120†**
52 gr	Berger	FB Varmint	FB	0.716"	0.148	**0.202**	**0.102**
52 gr	Hornady	A-MAX	BT	0.800"	0.148	**0.236**	**0.120**
52 gr	Hornady	BTHP Match	BT	0.716"	0.148	**0.211†**	**0.107†**
52 gr	Hornady	ELD Match	BT	0.800"	0.148	**0.244†**	**0.123†**
52 gr	Nosler	Custom Competition HPBT	BT	0.717"	0.148	**0.219**	**0.111**
52 gr	Sierra	MatchKing HPBT	BT	0.713"	0.148	**0.219**	**0.111**
52 gr	Speer	HP	BT	0.670"	0.148	**0.217†**	**0.110†**
52 gr	Speer	HPBT Match	BT	0.740"	0.148	**0.222†**	**0.112†**
52 gr	Speer	Spitzer SP	FB	0.690"	0.148	**0.211†**	**0.107†**
53 gr	Hornady	GMX	BT	0.821"	0.151	**0.262†**	**0.133†**
53 gr	Barnes	TSX FB	FB	0.795"	0.151	**0.197†**	**0.099†**
53 gr	Hornady	HP Match	FB	0.711"	0.151	**0.211**	**0.107**
53 gr	Hornady	V-MAX	BT	0.831"	0.151	**0.262**	**0.133**
53 gr	Sierra	MatchKing HP	FB	0.692"	0.151	**0.216**	**0.109**
55 gr	Barnes	TSX FB	FB	0.803"	0.157	**0.201†**	**0.102†**
55 gr	Berger	FB Varmint	FB	0.752"	0.157	**0.211**	**0.107**
55 gr	Hornady	GMX	BT	0.827"	0.157	**0.224**	**0.113**
55 gr	Hornady	InterLock SP	FB	0.717"	0.157	**0.228†**	**0.115†**
55 gr	Hornady	V-MAX	FB	0.817"	0.157	**0.243†**	**0.123†**
55 gr	Lapua	FMJBT	BT	0.732"	0.157	**0.246†**	**0.124†**
55 gr	Norma	Full Metal Jacket	BT	0.685"	0.157	**0.245**	**0.124**
55 gr	Norma	Oryx	FB	0.713"	0.157	**0.178†**	**0.090†**
55 gr	Speer	Gold Dot Rifle SP	FB	0.726"	0.157	**0.210**	**0.106**
55 gr	Hornady	SP SX	FB	0.697"	0.157	**0.228†**	**0.115†**
55 gr	Remington	PSP	FB	0.657"	0.157	**0.190†**	**0.096†**
55 gr	Speer	TMJ	BT	0.760"	0.157	**0.259†**	**0.131†**
55 gr	Barnes	MPG FB	FB	0.935"	0.157	**0.217†**	**0.110†**
55 gr	Barnes	TTSX BT	BT	0.889"	0.157	**0.257**	**0.130**
55 gr	Berger	FB Target	FB	0.757"	0.157	**0.242**	**0.122**
55 gr	Hornady	FMJ BT	BT	0.741"	0.157	**0.243**	**0.123**
55 gr	Lapua	Soft Point	FB	0.669"	0.157	**0.187**	**0.095**
55 gr	Nosler	Ballistic Tip Varmint	BT	0.806"	0.157	**0.255**	**0.129**
55 gr	Nosler	Varmageddon	FB	0.795"	0.157	**0.214†**	**0.108†**

.224 Caliber (5.56mm) (continued)

Weight	Maker	Projectile	Base	Length	S.D.	G1 BC	G7 BC
55 gr	Sierra	BlitzKing	BT	0.823"	0.157	**0.256**	**0.130**
55 gr	Sierra	GameKing FMJ BT	BT	0.752"	0.157	**0.256**	**0.130**
55 gr	Sierra	GameKing HPBT	BT	0.715"	0.157	**0.183†**	**0.092†**
55 gr	Sierra	GameKing SBT	BT	0.724"	0.157	**0.241†**	**0.122†**
55 gr	Sierra	Semi-Point	FB	0.690"	0.157	**0.201**	**0.102**
55 gr	Sierra	Spitzer Blitz	FB	0.722"	0.157	**0.232†**	**0.118†**
55 gr	Sierra	VarmintKing Spitzer	FB	0.695"	0.157	**0.232†**	**0.118†**
55 gr	Speer	Spitzer SP	FB	0.705"	0.157	**0.204†**	**0.103†**
55 gr	Speer	TNT HP	BT	0.735"	0.157	**0.225†**	**0.114†**
60 gr	Hornady	InterLock SP	FB	0.701"	0.171	**0.256†**	**0.130†**
60 gr	Berger	FB Varmint	FB	0.804"	0.171	**0.276†**	**0.139†**
60 gr	Hornady	HP	FB	0.800"	0.171	**0.263†**	**0.133†**
60 gr	Hornady	V-MAX	FB	0.865"	0.171	**0.263**	**0.133**
60 gr	Nosler	Ballistic Tip Varmint	BT	0.858"	0.171	**0.260**	**0.132**
60 gr	Nosler	Partition	FB	0.791"	0.171	**0.212†**	**0.107†**
60 gr	Sierra	Tipped MatchKing	BT	0.897"	0.171	**0.318†**	**0.161†**
60 gr	Sierra	VarmintKing HP	FB	0.776"	0.171	**0.236†**	**0.119†**
62 gr	Barnes	TSX BT	BT	0.944"	0.177	**0.276†**	**0.140†**
62 gr	Barnes	TTSX BT	BT	0.973"	0.177	**0.281**	**0.142**
62 gr	Hornady	ELD-VT	BT	1.050"	0.177	**0.391**	**0.198**
62 gr	Nosler	Varmageddon	FB	0.770"	0.177	**0.233†**	**0.118†**
62 gr	Speer	Gold Dot Rifle SP	FB	0.810"	0.177	**0.299†**	**0.151†**
62 gr	Swift	Scirocco II	BT	0.928"	0.177	**0.296**	**0.150**
62 gr	Sierra	GameKing SBT	BT	0.776"	0.177	**0.293†**	**0.148†**
63 gr	Sierra	Pro-Hunter SP	FB	0.755"	0.179	**0.223†**	**0.113†**
64 gr	Berger	FB Varmint	FB	0.817"	0.182	**0.291†**	**0.147†**
64 gr	Nosler	Bonded Solid Base	FB	0.800"	0.182	**0.215**	**0.109**
64 gr	Sierra	Tipped GameKing	BT	0.970"	0.182	**0.318†**	**0.161†**
65 gr	Barnes	LRX BT	BT	1.115"	0.185	**0.401**	**0.203**
65 gr	Sierra	GameKing SBT	BT	0.851"	0.185	**0.298†**	**0.151†**
65 gr	Cutting Edge	MAXI	BT	1.012"	0.185	**0.284†**	**0.144†**
68 gr	Hornady	BTHP	BT	0.981"	0.194	**0.344†**	**0.174†**
69 gr	Sierra	Tipped MatchKing	BT	0.982"	0.196	**0.362**	**0.183**
69 gr	Barnes	Match Burner BT	BT	0.907"	0.196	**0.334**	**0.169**
69 gr	Lapua	Scenar	BT	0.910"	0.196	**0.344**	**0.174**
69 gr	Nosler	Custom Competition	BT	0.902"	0.196	**0.327**	**0.166**
69 gr	Sierra	MatchKing HPBT	BT	0.900"	0.196	**0.326**	**0.165**
69.4 gr	Lapua	Scenar-L	BT	0.936"	0.198	**0.347**	**0.175**
70 gr	Barnes	TAC-TX BT	FB	1.172"	0.199	**0.417**	**0.211**
70 gr	Barnes	TSX BT	BT	1.037"	0.199	**0.314**	**0.159**
70 gr	Barnes	TSX FB	FB	1.066"	0.199	**0.314**	**0.159**
70 gr	Berger	VLD Target	BT	0.961"	0.199	**0.377**	**0.191**
70 gr	Nosler	AccuBond	BT	1.000"	0.199	**0.344†**	**0.174†**
70 gr	Nosler	RDF	BT	0.962"	0.199	**0.403**	**0.204**
70 gr	Speer	Semi-Spitzer SP	FB	0.811"	0.199	**0.208†**	**0.105†**
70 gr	Hornady	GMX	BT	1.047"	0.199	**0.285**	**0.144**
73 gr	Berger	BT Target	BT	0.961"	0.208	**0.353**	**0.179**
73 gr	Hornady	ELD Match	BT	1.049"	0.208	**0.393†**	**0.199†**
75 gr	Berger	VLD Target	BT	1.049"	0.214	**0.427†**	**0.216†**

.224 Caliber (5.56mm) (continued)

Weight	Maker	Projectile	Base	Length	S.D.	G1 BC	G7 BC
75 gr	Hornady	BTHP Match	BT	0.985"	0.214	**0.353**	**0.179**
75 gr	Hornady	ELD Match	BT	1.119"	0.214	**0.457†**	**0.231†**
75 gr	Speer	Gold Dot Rifle BTSP	BT	0.933"	0.214	**0.314†**	**0.159†**
75 gr	Swift	Scirocco II	BT	1.085"	0.214	**0.404†**	**0.204†**
75 gr	Hornady	A-MAX	BT	1.110"	0.214	**0.422**	**0.214**
76 gr	Hornady	A-Tip Match	BT	1.045"	0.216	**0.406**	**0.205**
77 gr	Barnes	LRX BT	BT	1.182"	0.219	**0.381**	**0.193**
77 gr	Barnes	Match Burner BT	FB	0.990"	0.219	**0.348**	**0.176**
77 gr	Berger	OTM Tactical	BT	1.011"	0.219	**0.379**	**0.192**
77 gr	Lapua	Scenar GB527	BT	1.043"	0.219	**0.407**	**0.206**
77 gr	Lapua	Scenar-L	BT	1.043"	0.219	**0.392†**	**0.198†**
77 gr	Nosler	Custom Competition	BT	0.973"	0.219	**0.365**	**0.185**
77 gr	Nosler	RDF	BT	1.070"	0.219	**0.437†**	**0.221†**
77 gr	Sierra	MatchKing HPBT	BT	0.994"	0.219	**0.370**	**0.187**
77 gr	Sierra	Tipped MatchKing	BT	1.066"	0.219	**0.403**	**0.204**
78 gr	Barnes	TSX BT	FB	1.145"	0.222	**0.369†**	**0.187†**
80 gr	Berger	VLD Target	BT	1.090"	0.228	**0.454†**	**0.230†**
80 gr	Hornady	A-MAX	BT	1.162"	0.228	**0.452**	**0.229**
80 gr	Hornady	ELD Match	BT	1.152"	0.228	**0.485†**	**0.245†**
80 gr	Hornady	ELD-X	FB	1.160"	0.228	**0.481**	**0.244**
80 gr	Nosler	Custom Competition	BT	1.078"	0.228	**0.406**	**0.206**
80 gr	Sierra	MatchKing HPBT	BT	1.066"	0.228	**0.437**	**0.221**
80.5 gr	Berger	Fullbore Target	BT	1.079"	0.229	**0.444†**	**0.224†**
82 gr	Berger	Long Range BT Target	BT	1.091"	0.233	**0.445**	**0.225**
85 gr	Barnes	Match Burner BT	BT	1.059"	0.242	**0.394**	**0.199**
85 gr	Nosler	RDF	BT	1.135"	0.242	**0.486†**	**0.246†**
85.5 gr	Berger	Long Range Hybrid Target	BT	1.167"	0.243	**0.528**	**0.267**
88 gr	Sierra	Tipped MatchKing	BT	1.171"	0.251	**0.523†**	**0.265†**
88 gr	Hornady	ELD Match	BT	1.235"	0.251	**0.542†**	**0.274†**
90 gr	Berger	VLD Target	BT	1.241"	0.256	**0.536**	**0.271**
90 gr	Federal	Fusion	BT	1.120"	0.256	**0.409†**	**0.207†**
90 gr	Sierra	MatchKing HPBT	BT	1.171"	0.256	**0.506†**	**0.256†**
90 gr	Hornady	A-Tip Match	FB	1.275"	0.256	**0.569**	**0.288**
95 gr	Sierra	MatchKing HPBT/CN	BT	1.289"	0.270	**0.579**	**0.293**

.243 Caliber (6mm) — 114 Projectiles

Bore 0.237" (6.02 mm) • Groove / bullet 0.243" (6.17 mm) • 55 gr to 116 gr

S.D. = sectional density. † = BC converted between G1 and G7 or computed from bullet geometry rather than published or measured.

Weight	Maker	Projectile	Base	Length	S.D.	G1 BC	G7 BC
55 gr	Nosler	Ballistic Tip Lead Free	FB	0.950"	0.133	**0.268†**	**0.135†**
55 gr	Nosler	Varmageddon	FB	0.750"	0.133	**0.234†**	**0.119†**
55 gr	Sierra	BlitzKing	FB	0.747"	0.133	**0.193†**	**0.098†**
58 gr	Barnes	Varminator FB	FB	0.683"	0.140	**0.174†**	**0.088†**
58 gr	Hornady	V-MAX	BT	0.793"	0.140	**0.237†**	**0.120†**
60 gr	Berger	FB Varmint	FB	0.750"	0.145	**0.237†**	**0.120†**
60 gr	Sierra	VarmintKing HP	FB	0.732"	0.145	**0.183†**	**0.093†**
62 gr	Barnes	Varmint Grenade FB	FB	0.972"	0.150	**0.192†**	**0.097†**
65 gr	Berger	BT Target	BT	0.840"	0.157	**0.284†**	**0.143†**
65 gr	Hornady	V-MAX	BT	0.840"	0.157	**0.266†**	**0.135†**

.243 Caliber (6mm) (continued)

Weight	Maker	Projectile	Base	Length	S.D.	G1 BC	G7 BC
66 gr	Berger	BR Column Target	FB	0.810"	0.160	**0.232†**	**0.118†**
68 gr	Berger	FB Target	FB	0.838"	0.165	**0.254**	**0.128**
68 gr	Barnes	Match Burner FB	FB	0.840"	0.165	**0.267**	**0.135**
69 gr	Berger	High BC FB Varmint	FB	0.923"	0.167	**0.292**	**0.148**
70 gr	Hornady	InterLock SP	FB	0.795"	0.169	**0.243†**	**0.123†**
70 gr	Berger	HPBT Varmint	BT	0.949"	0.169	**0.302†**	**0.153†**
70 gr	Hornady	Spitzer SP	FB	0.799"	0.169	**0.261**	**0.132**
70 gr	Nosler	Ballistic Tip Varmint	BT	0.909"	0.169	**0.284**	**0.144**
70 gr	Sierra	BlitzKing	FB	0.898"	0.169	**0.304†**	**0.154†**
70 gr	Sierra	MatchKing HPBT	BT	0.834"	0.169	**0.259**	**0.131**
70 gr	Speer	TNT HP	FB	0.845"	0.169	**0.269†**	**0.136†**
72 gr	Barnes	Varminator FB	FB	0.850"	0.174	**0.214†**	**0.108†**
75 gr	Hornady	V-MAX	BT	0.942"	0.181	**0.322**	**0.163**
75 gr	Sierra	VarmintKing HP	FB	0.815"	0.181	**0.214†**	**0.108†**
75 gr	Barnes	Banded Solid	BT	0.942"	0.181	**0.329†**	**0.166†**
75 gr	Speer	6mm HP	BT	0.815"	0.181	**0.185†**	**0.094†**
75 gr	Hornady	HP	FB	0.881"	0.181	**0.285†**	**0.144†**
77 gr	Lapua	HP G490	FB	0.953"	0.186	**0.310**	**0.157**
80 gr	Hornady	GMX	FB	1.105"	0.194	**0.286**	**0.145**
80 gr	Barnes	TTSX BT	BT	1.077"	0.194	**0.316**	**0.160**
80 gr	Berger	FB Varmint	FB	0.914"	0.194	**0.304**	**0.154**
80 gr	Hornady	ELD-VT	BT	1.150"	0.194	**0.397**	**0.201**
80 gr	Nosler	Ballistic Tip Varmint	BT	0.993"	0.194	**0.321**	**0.163**
80 gr	Sierra	SBT Blitz	BT	0.894"	0.194	**0.306†**	**0.155†**
80 gr	Sierra	Spitzer Single Shot Pistol SSP	FB	0.880"	0.194	**0.272†**	**0.137†**
85 gr	Speer	Spitzer BTSP	BT	0.940"	0.206	**0.366†**	**0.185†**
85 gr	Barnes	TSX BT	BT	1.059"	0.206	**0.321†**	**0.162†**
85 gr	Hornady	InterBond	BT	1.076"	0.206	**0.377**	**0.191**
85 gr	Nosler	Partition	FB	0.951"	0.206	**0.293†**	**0.148†**
85 gr	Sierra	GameKing HPBT	BT	0.934"	0.206	**0.275†**	**0.139†**
85 gr	Sierra	VarmintKing Spitzer	FB	0.903"	0.206	**0.302†**	**0.153†**
87 gr	Berger	VLD Hunting	BT	1.042"	0.210	**0.431**	**0.218**
87 gr	Hornady	BTHP	BT	0.961"	0.210	**0.355**	**0.180**
87 gr	Hornady	V-MAX	BT	1.053"	0.210	**0.387**	**0.196**
87 gr	Hornady	InterLock SP	FB	0.933"	0.210	**0.317†**	**0.161†**
88 gr	Berger	High BC FB Varmint	FB	1.076"	0.213	**0.381**	**0.193**
88 gr	Warner Tool	Flat Line	FB	1.245"	0.213	**0.507**	**0.256**
89.5 gr	Lapua	Scenar	BT	1.108"	0.217	**0.429†**	**0.217†**
90 gr	Sierra	Tipped GameKing	BT	1.199"	0.218	**0.482†**	**0.244†**
90 gr	Barnes	TAC-TX	BT	1.254"	0.218	**0.437**	**0.221**
90 gr	Berger	BT Target	BT	1.023"	0.218	**0.411**	**0.208**
90 gr	Hornady	CX	BT	1.260"	0.218	**0.420**	**0.213**
90 gr	Hornady	ELD-X	BT	1.104"	0.218	**0.406**	**0.205**
90 gr	Hornady	GMX	FB	1.252"	0.218	**0.409**	**0.207**
90 gr	Lapua	Naturalis	BT	1.122"	0.218	**0.222†**	**0.112†**
90 gr	Lapua	Scenar-L	BT	1.094"	0.218	**0.434†**	**0.219†**
90 gr	Nosler	AccuBond	BT	1.091"	0.218	**0.357**	**0.181**
90 gr	Nosler	Ballistic Tip	BT	1.071"	0.218	**0.339†**	**0.172†**
90 gr	Nosler	E-TIP	BT	1.189"	0.218	**0.335**	**0.170**

.243 Caliber (6mm) (continued)

Weight	Maker	Projectile	Base	Length	S.D.	G1 BC	G7 BC
90 gr	Sierra	GameKing FMJ BT	BT	0.969"	0.218	**0.372†**	**0.188†**
90 gr	Speer	6mm Spitzer SP Hot-Cor	FB	0.941"	0.218	**0.352†**	**0.178†**
90 gr	Swift	Scirocco II	BT	1.132"	0.218	**0.404†**	**0.204†**
95 gr	Sierra	Tipped MatchKing	BT	1.180"	0.230	**0.477**	**0.241**
95 gr	Barnes	LRX BT	BT	1.270"	0.230	**0.403**	**0.204**
95 gr	Berger	Classic Hunter	BT	1.070"	0.230	**0.434**	**0.219**
95 gr	Berger	VLD Hunting	BT	1.132"	0.230	**0.468†**	**0.237†**
95 gr	Nosler	Partition	FB	1.029"	0.230	**0.347**	**0.176**
95 gr	Speer	Impact Tipped Plated	BT	1.256"	0.230	**0.427**	**0.216**
95 gr	Federal	Fusion	FB	1.025"	0.230	**0.352**	**0.178**
95 gr	Sierra	MatchKing HPBT/CN	BT	1.160"	0.230	**0.456**	**0.231**
95 gr	Sierra	Tipped GameKing	BT	1.160"	0.230	**0.477†**	**0.242†**
95 gr	Berger	VLD Target	BT	1.129"	0.230	**0.468†**	**0.237†**
95 gr	Nosler	Ballistic Silvertip	BT	1.115"	0.230	**0.352†**	**0.178†**
95 gr	Nosler	Ballistic Tip	FB	1.120"	0.230	**0.352†**	**0.178†**
95 gr	Hornady	SST	FB	1.102"	0.230	**0.353**	**0.179**
100 gr	Berger	BT Target	BT	1.177"	0.242	**0.458**	**0.232**
100 gr	Hornady	InterLock BTSP	BT	1.083"	0.242	**0.392†**	**0.198†**
100 gr	Hornady	InterLock SP	FB	1.067"	0.242	**0.370†**	**0.187†**
100 gr	Lapua	Mega E457	FB	0.988"	0.242	**0.277†**	**0.140†**
100 gr	Norma	Oryx	FB	1.140"	0.242	**0.248†**	**0.125†**
100 gr	Nosler	Partition	FB	1.065"	0.242	**0.357†**	**0.181†**
100 gr	Sierra	GameKing SBT	BT	1.079"	0.242	**0.412†**	**0.209†**
100 gr	Sierra	Pro-Hunter Spitzer	FB	1.025"	0.242	**0.361**	**0.182**
100 gr	Sierra	Tipped GameKing	BT	1.265"	0.242	**0.507†**	**0.256†**
100 gr	Speer	Grand Slam SP	FB	1.040"	0.242	**0.315†**	**0.160†**
100 gr	Speer	Spitzer BTSP	BT	1.050"	0.242	**0.430†**	**0.218†**
103 gr	Hornady	ELD-X	BT	1.256"	0.249	**0.505**	**0.255**
105 gr	Barnes	Match Burner BT	BT	1.195"	0.254	**0.503†**	**0.255†**
105 gr	Berger	BT Target	BT	1.216"	0.254	**0.500†**	**0.253†**
105 gr	Berger	VLD Hunting	BT	1.221"	0.254	**0.548**	**0.278**
105 gr	Berger	VLD Target	BT	1.232"	0.254	**0.517†**	**0.261†**
105 gr	Hornady	BTHP Match	BT	1.240"	0.254	**0.482**	**0.244**
105 gr	Lapua	Scenar-L	BT	1.254"	0.254	**0.482**	**0.244**
105 gr	Nosler	RDF	BT	1.242"	0.254	**0.535**	**0.271**
105 gr	Hornady	A-MAX	BT	1.237"	0.254	**0.494**	**0.250**
105 gr	Sierra	MatchKing HPBT/CN	BT	1.230"	0.254	**0.511†**	**0.259†**
105 gr	Speer	Spitzer SP	BT	1.088"	0.254	**0.409†**	**0.207†**
105 gr	Berger	Hybrid Target	BT	1.266"	0.254	**0.538†**	**0.272†**
105 gr	Lapua	Scenar GB478	BT	1.250"	0.254	**0.490**	**0.248**
107 gr	Sierra	MatchKing HPBT	BT	1.227"	0.259	**0.516†**	**0.261†**
107 gr	Sierra	Tipped MatchKing	BT	1.230"	0.259	**0.518**	**0.262**
107 gr	Nosler	Custom Competition	BT	1.220"	0.259	**0.504†**	**0.255†**
108 gr	Berger	BT Target	BT	1.215"	0.261	**0.524†**	**0.265†**
108 gr	Berger	Elite Hunter	BT	1.260"	0.261	**0.558**	**0.282**
108 gr	Hornady	ELD Match	BT	1.266"	0.261	**0.533**	**0.270**
109 gr	Berger	Long Range Hybrid Target	BT	1.277"	0.264	**0.578**	**0.292**
109 gr	Hornady	ELD Match	FB	1.317"	0.264	**0.564**	**0.285**
110 gr	Hornady	A-Tip Match	BT	1.307"	0.266	**0.593†**	**0.300†**

.243 Caliber (6mm) (continued)

Weight	Maker	Projectile	Base	Length	S.D.	G1 BC	G7 BC
110 gr	Sierra	MatchKing HPBT/CN	BT	1.345"	0.266	**0.608**	**0.308**
112 gr	Barnes	Match Burner BT	BT	1.400"	0.271	**0.585†**	**0.296†**
115 gr	Berger	VLD Hunting	BT	1.353"	0.278	**0.565**	**0.286**
115 gr	Berger	VLD Target	BT	1.331"	0.278	**0.569**	**0.288**
115 gr	Nosler	RDF	BT	1.350"	0.278	**0.599**	**0.303**
116 gr	Sierra	Tipped MatchKing	BT	1.365"	0.281	**0.623†**	**0.315†**

.257 Caliber (6.35mm) — 58 Projectiles

Bore 0.250" (6.35 mm) • Groove / bullet 0.257" (6.53 mm) • 60 gr to 138 gr

S.D. = sectional density. † = BC converted between G1 and G7 or computed from bullet geometry rather than published or measured.

Weight	Maker	Projectile	Base	Length	S.D.	G1 BC	G7 BC
60 gr	Hornady	FP	FB	0.505"	0.130	**0.098†**	**0.050†**
70 gr	Sierra	BlitzKing	FB	0.878"	0.151	**0.237**	**0.120**
75 gr	Hornady	V-MAX	BT	0.875"	0.162	**0.275**	**0.139**
75 gr	Sierra	VarmintKing HP	FB	0.752"	0.162	**0.189†**	**0.096†**
75 gr	Speer	Flat Point	FB	0.773"	0.162	**0.130**	**0.066**
75 gr	Hornady	HP	FB	0.764"	0.162	**0.249†**	**0.126†**
80 gr	Barnes	TTSX BT	BT	1.015"	0.173	**0.293**	**0.148**
85 gr	Nosler	Ballistic Tip Varmint	FB	1.000"	0.184	**0.306†**	**0.155†**
87 gr	Berger	FB Target	FB	0.965"	0.188	**0.294†**	**0.149†**
87 gr	Sierra	VarmintKing Spitzer	FB	0.862"	0.188	**0.284†**	**0.144†**
87 gr	Hornady	SP	FB	0.890"	0.188	**0.312†**	**0.158†**
87 gr	Speer	Spitzer SP Hot-Cor	FB	0.820"	0.188	**0.289†**	**0.146†**
87 gr	Speer	TNT HP	FB	0.915"	0.188	**0.325†**	**0.164†**
90 gr	Hornady	CX	FB	1.135"	0.195	**0.277**	**0.140**
90 gr	Hornady	GMX	FB	1.135"	0.195	**0.298**	**0.151**
90 gr	Sierra	BlitzKing	FB	1.071"	0.195	**0.350†**	**0.177†**
90 gr	Sierra	GameKing HPBT	BT	0.890"	0.195	**0.249†**	**0.126†**
100 gr	Barnes	TSX BT	BT	1.130"	0.216	**0.337†**	**0.171†**
100 gr	Barnes	TTSX BT	BT	1.195"	0.216	**0.354**	**0.179**
100 gr	Hornady	InterLock	BT	0.988"	0.216	**0.315**	**0.160**
100 gr	Nosler	Ballistic Tip	BT	1.117"	0.216	**0.352**	**0.178**
100 gr	Nosler	E-TIP	BT	1.215"	0.216	**0.368†**	**0.186†**
100 gr	Nosler	Partition	FB	1.035"	0.216	**0.350†**	**0.177†**
100 gr	Sierra	GameKing SBT	BT	0.991"	0.216	**0.335†**	**0.169†**
100 gr	Sierra	MatchKing HPBT	BT	1.086"	0.216	**0.366**	**0.185**
100 gr	Sierra	Pro-Hunter Spitzer	FB	0.970"	0.216	**0.322†**	**0.163†**
100 gr	Speer	HP	FB	0.960"	0.216	**0.254†**	**0.128†**
100 gr	Speer	Spitzer BTSP	BT	0.995"	0.216	**0.379†**	**0.192†**
100 gr	Speer	Spitzer SP Hot-Cor	FB	0.957"	0.216	**0.322†**	**0.163†**
100 gr	Swift	A-Frame	FB	1.015"	0.216	**0.307†**	**0.155†**
101 gr	Barnes	LRX BT	BT	1.235"	0.218	**0.383**	**0.194**
110 gr	Hornady	FTX	BT	1.071"	0.238	**0.330†**	**0.167†**
110 gr	Hornady	InterBond	BT	1.192"	0.238	**0.383**	**0.194**
110 gr	Hornady	ELD-X	FB	1.224"	0.238	**0.460**	**0.233**
110 gr	Nosler	AccuBond	BT	1.195"	0.238	**0.400**	**0.202**
110 gr	Sierra	Tipped GameKing	BT	1.245"	0.238	**0.440†**	**0.223†**
115 gr	Barnes	TSX FB	FB	1.224"	0.249	**0.329†**	**0.167†**

.257 Caliber (6.35mm) (continued)

Weight	Maker	Projectile	Base	Length	S.D.	G1 BC	G7 BC
115 gr	Berger	VLD Hunting	BT	1.182"	0.249	**0.482†**	**0.244†**
115 gr	Nosler	Ballistic Silvertip	FB	1.205"	0.249	**0.421†**	**0.213†**
115 gr	Nosler	Partition	FB	1.143"	0.249	**0.384**	**0.194**
115 gr	Nosler	Ballistic Tip	BT	1.209"	0.249	**0.407**	**0.206**
117 gr	Hornady	InterLock BTSP	BT	1.138"	0.253	**0.379†**	**0.192†**
117 gr	Hornady	InterLock RN	FB	0.969"	0.253	**0.236†**	**0.119†**
117 gr	Hornady	SST	FB	1.208"	0.253	**0.394**	**0.199**
117 gr	Barnes	LRX BT	BT	1.426"	0.253	**0.512**	**0.259**
117 gr	Sierra	GameKing SBT	BT	1.116"	0.253	**0.397†**	**0.201†**
117 gr	Sierra	Pro-Hunter Spitzer	FB	1.080"	0.253	**0.363**	**0.183**
120 gr	Hornady	InterLock	BT	1.189"	0.260	**0.382**	**0.193**
120 gr	Hornady	InterLock SP	FB	1.213"	0.260	**0.391**	**0.198**
120 gr	Nosler	Partition	FB	1.175"	0.260	**0.363†**	**0.184†**
120 gr	Sierra	GameKing HPBT	BT	1.170"	0.260	**0.342†**	**0.173†**
120 gr	Speer	Grand Slam SP	BT	1.075"	0.260	**0.343†**	**0.174†**
120 gr	Speer	Spitzer BTSP	BT	1.140"	0.260	**0.463†**	**0.234†**
120 gr	Swift	A-Frame	FB	1.150"	0.260	**0.368†**	**0.186†**
133 gr	Berger	Elite Hunter	BT	1.407"	0.288	**0.591**	**0.299**
134 gr	Hornady	ELD Match	BT	1.475"	0.290	**0.639**	**0.323**
135 gr	Berger	Long Range Hybrid Target	BT	1.416"	0.292	**0.653**	**0.330**
138 gr	Hornady	A-Tip Match	BT	1.475"	0.298	**0.686†**	**0.347†**

.264 Caliber (6.5mm) — 123 Projectiles

Bore 0.256" (6.50 mm) • Groove / bullet 0.264" (6.71 mm) • 85 gr to 160 gr

S.D. = sectional density. † = BC converted between G1 and G7 or computed from bullet geometry rather than published or measured.

Weight	Maker	Projectile	Base	Length	S.D.	G1 BC	G7 BC
85 gr	Sierra	VarmintKing HP	FB	0.828"	0.174	**0.226†**	**0.114†**
90 gr	Nosler	Varmageddon	FB	1.021"	0.184	**0.325†**	**0.165†**
90 gr	Speer	TNT HP	FB	0.933"	0.184	**0.271†**	**0.137†**
95 gr	Hornady	V-MAX	BT	1.015"	0.195	**0.358†**	**0.181†**
100 gr	Hornady	InterLock SP	FB	0.984"	0.205	**0.308†**	**0.156†**
100 gr	Barnes	TTSX BT	BT	1.154"	0.205	**0.346**	**0.175**
100 gr	Hornady	A-MAX	BT	1.049"	0.205	**0.370**	**0.187**
100 gr	Hornady	ELD Match	BT	1.053"	0.205	**0.382†**	**0.193†**
100 gr	Hornady	ELD-VT	BT	1.280"	0.205	**0.442†**	**0.224†**
100 gr	Hornady	Spitzer SP	FB	0.972"	0.205	**0.347**	**0.176**
100 gr	Lapua	FMJ S341	FB	0.839"	0.205	**0.241†**	**0.122†**
100 gr	Lapua	Scenar	BT	1.220"	0.205	**0.423**	**0.214**
100 gr	Nosler	Ballistic Tip	BT	1.076"	0.205	**0.336**	**0.170**
100 gr	Nosler	Custom Competition	BT	1.060"	0.205	**0.336**	**0.170**
100 gr	Nosler	Partition	FB	0.962"	0.205	**0.303†**	**0.153†**
100 gr	Sierra	MatchKing HPBT	BT	0.921"	0.205	**0.355†**	**0.180†**
100 gr	Sierra	VarmintKing HP	FB	0.920"	0.205	**0.253†**	**0.128†**
105 gr	Sierra	BlitzKing	BT	1.275"	0.215	**0.418†**	**0.212†**
105 gr	Cutting Edge	MAXI	FB	1.140"	0.215	**0.318**	**0.161**
107 gr	Sierra	Tipped MatchKing	BT	1.200"	0.219	**0.451†**	**0.228†**
107 gr	Sierra	MatchKing HPBT	BT	1.275"	0.219	**0.441**	**0.223**
108 gr	Lapua	Scenar GB464	BT	1.300"	0.221	**0.456**	**0.231**

.264 Caliber (6.5mm) (continued)

Weight	Maker	Projectile	Base	Length	S.D.	G1 BC	G7 BC
115 gr	Barnes	TAC-TX BT	BT	1.265"	0.236	**0.373†**	**0.189†**
120 gr	Barnes	Match Burner BT	BT	1.178"	0.246	**0.460†**	**0.233†**
120 gr	Barnes	TSX BT	BT	1.252"	0.246	**0.367†**	**0.186†**
120 gr	Barnes	TTSX BT	BT	1.320"	0.246	**0.405**	**0.205**
120 gr	Berger	BT Target	BT	1.204"	0.246	**0.474†**	**0.240†**
120 gr	Hornady	A-MAX	BT	1.200"	0.246	**0.449†**	**0.227†**
120 gr	Hornady	ELD Match	BT	1.203"	0.246	**0.463†**	**0.234†**
120 gr	Hornady	GMX	BT	1.404"	0.246	**0.447†**	**0.226†**
120 gr	Lapua	Scenar-L GB547	BT	1.264"	0.246	**0.474**	**0.240**
120 gr	Lapua	TRX Tipped Solid	BT	1.378"	0.246	**0.419**	**0.212**
120 gr	Norma	Ecostrike	BT	1.350"	0.246	**0.426**	**0.216**
120 gr	Nosler	Ballistic Tip	BT	1.230"	0.246	**0.423**	**0.214**
120 gr	Nosler	E-TIP	BT	1.350"	0.246	**0.462†**	**0.234†**
120 gr	Sierra	MatchKing HPBT	BT	1.170"	0.246	**0.413**	**0.209**
120 gr	Sierra	Pro-Hunter Spitzer	FB	1.093"	0.246	**0.394**	**0.199**
120 gr	Sierra	Tipped GameKing	FB	1.315"	0.246	**0.474†**	**0.240†**
120 gr	Speer	Gold Dot Rifle BTSP	BT	1.120"	0.246	**0.441†**	**0.223†**
120 gr	Swift	A-Frame	FB	1.114"	0.246	**0.332†**	**0.168†**
121 gr	Warner Tool	Flat Line	FB	1.462"	0.248	**0.629**	**0.318**
123 gr	Hornady	ELD Match	BT	1.247"	0.252	**0.497†**	**0.251†**
123 gr	Lapua	Scenar	BT	1.302"	0.252	**0.521**	**0.264**
123 gr	Nosler	Custom Competition	BT	1.208"	0.252	**0.476**	**0.241**
123 gr	Sierra	MatchKing HPBT	BT	1.295"	0.252	**0.514†**	**0.260†**
123 gr	Warner Tool	Flat Line	FB	1.450"	0.252	**0.622**	**0.314**
123 gr	Hornady	A-MAX	BT	1.236"	0.252	**0.472**	**0.239**
123 gr	Hornady	SST	BT	1.236"	0.252	**0.473**	**0.239**
125 gr	Nosler	Partition	FB	1.170"	0.256	**0.417†**	**0.211†**
127 gr	Barnes	LRX BT	BT	1.400"	0.260	**0.454**	**0.230**
129 gr	Hornady	SST	BT	1.322"	0.264	**0.484**	**0.245**
129 gr	Hornady	InterLock BTSP	BT	1.153"	0.264	**0.484†**	**0.245†**
129 gr	Hornady	InterLock SP	FB	1.169"	0.264	**0.432†**	**0.218†**
129 gr	Nosler	AccuBond Long Range	BT	1.359"	0.264	**0.558**	**0.282**
129 gr	Hornady	InterBond	BT	1.335"	0.264	**0.524**	**0.265**
130 gr	Swift	Scirocco II	BT	1.357"	0.266	**0.508**	**0.257**
130 gr	Barnes	TSX BT	BT	1.320"	0.266	**0.396†**	**0.200†**
130 gr	Berger	AR Hybrid OTM Tactical	BT	1.291"	0.266	**0.566**	**0.286**
130 gr	Berger	VLD Hunting	BT	1.321"	0.266	**0.564†**	**0.285†**
130 gr	Berger	VLD Target	BT	1.315"	0.266	**0.570**	**0.288**
130 gr	Federal	Terminal Ascent	FB	1.421"	0.266	**0.520**	**0.263**
130 gr	Hornady	ELD Match	BT	1.311"	0.266	**0.533†**	**0.270†**
130 gr	Nosler	AccuBond	BT	1.320"	0.266	**0.447**	**0.226**
130 gr	Nosler	RDF	BT	1.340"	0.266	**0.572†**	**0.289†**
130 gr	Sierra	GameKing HPBT	FB	1.134"	0.266	**0.349†**	**0.177†**
130 gr	Sierra	GameKing TGK	BT	1.398"	0.266	**0.502†**	**0.254†**
130 gr	Sierra	Tipped MatchKing	BT	1.358"	0.266	**0.532**	**0.269**
130 gr	Sierra	MatchKing HPBT/CN	BT	1.240"	0.266	**0.575†**	**0.291†**
135 gr	Berger	Classic Hunter	BT	1.325"	0.277	**0.592**	**0.300**
135 gr	Hornady	A-Tip Match	BT	1.389"	0.277	**0.624**	**0.316**
136 gr	Lapua	Scenar-L	BT	1.356"	0.279	**0.547**	**0.277**

.264 Caliber (6.5mm) (continued)

Weight	Maker	Projectile	Base	Length	S.D.	G1 BC	G7 BC
139 gr	Lapua	Scenar	BT	1.364"	0.285	**0.586†**	**0.297†**
140 gr	Sierra	Tipped GameKing	BT	1.320"	0.287	**0.554†**	**0.280†**
140 gr	Swift	A-Frame	FB	1.245"	0.287	**0.387†**	**0.196†**
140 gr	Barnes	Match Burner BT	BT	1.338"	0.287	**0.580†**	**0.294†**
140 gr	Berger	Elite Hunter	BT	1.403"	0.287	**0.616**	**0.312**
140 gr	Berger	Hybrid Target	BT	1.402"	0.287	**0.613**	**0.310**
140 gr	Berger	Long Range BT Target	BT	1.400"	0.287	**0.603**	**0.305**
140 gr	Berger	VLD Hunting	BT	1.392"	0.287	**0.607†**	**0.307†**
140 gr	Berger	VLD Target	BT	1.389"	0.287	**0.604†**	**0.306†**
140 gr	Hornady	A-MAX	BT	1.375"	0.287	**0.569†**	**0.288†**
140 gr	Hornady	BTHP Match	BT	1.336"	0.287	**0.556**	**0.281**
140 gr	Hornady	ECX	FB	1.360"	0.287	**0.292†**	**0.148†**
140 gr	Hornady	ELD Match	BT	1.380"	0.287	**0.619**	**0.313**
140 gr	Hornady	InterLock SP	FB	1.253"	0.287	**0.451†**	**0.228†**
140 gr	Lapua	Naturalis	BT	1.350"	0.287	**0.194†**	**0.098†**
140 gr	Norma	Tipstrike	BT	1.250"	0.287	**0.510**	**0.258**
140 gr	Nosler	AccuBond	BT	1.392"	0.287	**0.469**	**0.238**
140 gr	Nosler	Ballistic Tip	FB	1.350"	0.287	**0.473†**	**0.239†**
140 gr	Nosler	Custom Competition	BT	1.310"	0.287	**0.546†**	**0.276†**
140 gr	Nosler	Partition	FB	1.290"	0.287	**0.455†**	**0.230†**
140 gr	Nosler	RDF	BT	1.417"	0.287	**0.624**	**0.316**
140 gr	Sierra	GameKing SBT	BT	1.262"	0.287	**0.482†**	**0.244†**
140 gr	Sierra	MatchKing HPBT	BT	1.303"	0.287	**0.532†**	**0.269†**
140 gr	Speer	Gold Dot	BT	1.260"	0.287	**0.551†**	**0.279†**
140 gr	Speer	Grand Slam SP	FB	1.120"	0.287	**0.480†**	**0.243†**
140 gr	Speer	Impact Tipped Plated	BT	1.450"	0.287	**0.638†**	**0.323†**
140 gr	Speer	Spitzer SP Hot-Cor	FB	1.201"	0.287	**0.480†**	**0.243†**
140 gr	Hornady	SST	BT	1.398"	0.287	**0.519**	**0.263**
142 gr	Nosler	AccuBond Long Range	BT	1.445"	0.291	**0.603**	**0.305**
142 gr	Sierra	MKX HPBT	BT	1.372"	0.291	**0.567**	**0.287**
142 gr	Sierra	MatchKing HPBT/CN	BT	1.375"	0.291	**0.612**	**0.310**
143 gr	Hornady	ELD-X	BT	1.382"	0.293	**0.608**	**0.308**
143 gr	Norma	Bondstrike Extreme	BT	1.450"	0.293	**0.634†**	**0.321†**
144 gr	Berger	Long Range Hybrid Target	BT	1.413"	0.295	**0.659**	**0.334**
144 gr	Lapua	FMJBT B343	BT	1.295"	0.295	**0.581**	**0.294**
144 gr	Lapua	MaxRange Target	BT	1.370"	0.295	**0.662**	**0.335**
144 gr	Sierra	MatchKing HPBT	BT	1.375"	0.295	**0.541†**	**0.274†**
145 gr	Barnes	Match Burner BT	BT	1.424"	0.297	**0.676**	**0.342**
145 gr	Sierra	Tipped GameKing	BT	1.440"	0.297	**0.587†**	**0.297†**
147 gr	Hornady	ELD Match	BT	1.434"	0.301	**0.669**	**0.338**
150 gr	Nosler	AccuBond Long Range	BT	1.500"	0.307	**0.589†**	**0.298†**
150 gr	Sierra	MatchKing HPBT	BT	1.484"	0.307	**0.709**	**0.359**
153 gr	Hornady	A-Tip Match	BT	1.500"	0.314	**0.697†**	**0.353†**
153 gr	Sierra	Tipped MatchKing	BT	1.450"	0.314	**0.681†**	**0.345†**
153.5 gr	Berger	Long Range Hybrid Target	BT	1.514"	0.315	**0.686†**	**0.347†**
155 gr	Sierra	MatchKing HPBT	BT	1.450"	0.318	**0.551†**	**0.279†**
156 gr	Berger	EOL Elite Hunter	BT	1.512"	0.320	**0.688**	**0.348**
156 gr	Lapua	Mega	FB	1.248"	0.320	**0.364**	**0.184**
156 gr	Norma	Oryx	FB	1.270"	0.320	**0.347†**	**0.176†**

.264 Caliber (6.5mm) (continued)

Weight	Maker	Projectile	Base	Length	S.D.	G1 BC	G7 BC
156 gr	Speer	Impact Tipped Plated	BT	1.540"	0.320	**0.623**	**0.315**
160 gr	Hornady	InterLock RN	FB	1.257"	0.328	**0.275†**	**0.139†**
160 gr	Sierra	Semi-Point	FB	1.252"	0.328	**0.341**	**0.173**

.277 Caliber (6.8mm) — 81 Projectiles

Bore 0.270" (6.86 mm) • Groove / bullet 0.277" (7.04 mm) • 85 gr to 180 gr

S.D. = sectional density. † = BC converted between G1 and G7 or computed from bullet geometry rather than published or measured.

Weight	Maker	Projectile	Base	Length	S.D.	G1 BC	G7 BC
85 gr	Nosler	E-TIP	FB	1.004"	0.158	**0.254†**	**0.128†**
85 gr	Barnes	MPG FB	FB	0.937"	0.158	**0.221†**	**0.112†**
85 gr	Barnes	TSX FB	FB	0.886"	0.158	**0.237†**	**0.120†**
90 gr	Sierra	VarmintKing HP	BT	0.851"	0.168	**0.195†**	**0.098†**
90 gr	Speer	Gold Dot	BT	0.846"	0.168	**0.244†**	**0.123†**
90 gr	Speer	TNT HP	FB	0.845"	0.168	**0.292†**	**0.148†**
95 gr	Barnes	TAC-TX	BT	1.020"	0.177	**0.363†**	**0.184†**
95 gr	Barnes	TTSX BT	BT	1.031"	0.177	**0.281**	**0.142**
100 gr	Hornady	GMX	FB	1.120"	0.186	**0.277**	**0.140**
100 gr	Hornady	InterLock SP	FB	0.890"	0.186	**0.298†**	**0.151†**
100 gr	Nosler	AccuBond	BT	1.045"	0.186	**0.296**	**0.150**
100 gr	Speer	HP	BT	0.870"	0.186	**0.194†**	**0.098†**
110 gr	Barnes	TSX BT	FB	1.083"	0.205	**0.311†**	**0.157†**
110 gr	Barnes	TTSX BT	BT	1.165"	0.205	**0.347**	**0.175**
110 gr	Hornady	BTHP Match	BT	0.997"	0.205	**0.356**	**0.180**
110 gr	Hornady	InterLock HP	FB	1.000"	0.205	**0.341**	**0.173**
110 gr	Nosler	AccuBond	BT	1.105"	0.205	**0.344†**	**0.174†**
110 gr	Sierra	Pro-Hunter Spitzer	FB	0.800"	0.205	**0.309†**	**0.156†**
110 gr	Hornady	V-MAX	BT	1.045"	0.205	**0.356†**	**0.180†**
115 gr	Sierra	MatchKing HPBT	BT	0.959"	0.214	**0.321**	**0.163**
115 gr	Speer	Gold Dot Rifle BTSP	BT	1.050"	0.214	**0.387†**	**0.196†**
120 gr	Barnes	XFB	FB	1.294"	0.223	**0.337†**	**0.171†**
120 gr	Hornady	SST	BT	1.122"	0.223	**0.378**	**0.191**
129 gr	Barnes	LRX BT	BT	1.341"	0.240	**0.428†**	**0.216†**
130 gr	Barnes	TSX BT	BT	1.220"	0.242	**0.383**	**0.194**
130 gr	Barnes	TTSX BT	BT	1.321"	0.242	**0.377**	**0.191**
130 gr	Barnes	XFB	FB	1.210"	0.242	**0.356†**	**0.180†**
130 gr	Berger	Classic Hunter	BT	1.204"	0.242	**0.503**	**0.255**
130 gr	Berger	VLD Hunting	BT	1.201"	0.242	**0.478†**	**0.242†**
130 gr	Hornady	InterLock SP	FB	1.098"	0.242	**0.397†**	**0.201†**
130 gr	Nosler	AccuBond	BT	1.234"	0.242	**0.393**	**0.199**
130 gr	Nosler	Ballistic Silvertip	BT	1.226"	0.242	**0.395**	**0.200**
130 gr	Nosler	Ballistic Tip	FB	1.220"	0.242	**0.402†**	**0.204†**
130 gr	Nosler	E-TIP	BT	1.332"	0.242	**0.390**	**0.197**
130 gr	Nosler	Partition	FB	1.135"	0.242	**0.387†**	**0.196†**
130 gr	Sierra	GameKing SBT	BT	1.130"	0.242	**0.416†**	**0.210†**
130 gr	Sierra	Pro-Hunter Spitzer	FB	1.070"	0.242	**0.368†**	**0.186†**
130 gr	Speer	Grand Slam SP	FB	1.050"	0.242	**0.320†**	**0.162†**
130 gr	Speer	Spitzer BTSP	BT	1.080"	0.242	**0.397†**	**0.201†**
130 gr	Speer	Spitzer SP Hot-Cor	FB	1.050"	0.242	**0.369†**	**0.187†**

.277 Caliber (6.8mm) (continued)

Weight	Maker	Projectile	Base	Length	S.D.	G1 BC	G7 BC
130 gr	Swift	A-Frame	FB	1.091"	0.242	**0.311†**	**0.158†**
130 gr	Swift	Scirocco II	BT	1.315"	0.242	**0.434†**	**0.220†**
130 gr	Swift	Soft Point	FB	1.280"	0.242	**0.366**	**0.185**
130 gr	Hornady	GMX	BT	1.376"	0.242	**0.425†**	**0.215†**
130 gr	Hornady	InterBond	BT	1.262"	0.242	**0.451**	**0.228**
130 gr	Hornady	SST	BT	1.245"	0.242	**0.442**	**0.224**
135 gr	Nosler	Partition	BT	1.260"	0.251	**0.433†**	**0.219†**
135 gr	Sierra	MatchKing HPBT	BT	1.250"	0.251	**0.495**	**0.251**
136 gr	Federal	Edge TLR	BT	1.260"	0.253	**0.498†**	**0.252†**
140 gr	Barnes	TSX BT	BT	1.303"	0.261	**0.400**	**0.203**
140 gr	Berger	Classic Hunter	BT	1.274"	0.261	**0.536**	**0.271**
140 gr	Berger	VLD Hunting	BT	1.248"	0.261	**0.505**	**0.256**
140 gr	Hornady	InterLock BTSP	BT	1.215"	0.261	**0.455**	**0.230**
140 gr	Nosler	AccuBond	BT	1.309"	0.261	**0.429**	**0.217**
140 gr	Nosler	Ballistic Tip	BT	1.293"	0.261	**0.443**	**0.224**
140 gr	Nosler	Partition	FB	1.195"	0.261	**0.409**	**0.207**
140 gr	Sierra	GameKing HPBT	BT	1.190"	0.261	**0.333†**	**0.168†**
140 gr	Sierra	GameKing SBT	BT	1.180"	0.261	**0.443†**	**0.224†**
140 gr	Sierra	GameKing TGK	BT	1.260"	0.261	**0.500†**	**0.253†**
140 gr	Swift	A-Frame	FB	1.170"	0.261	**0.353**	**0.179**
140 gr	Swift	Soft Point	FB	1.190"	0.261	**0.386†**	**0.195†**
140 gr	Hornady	SST	BT	1.304"	0.261	**0.476**	**0.241**
145 gr	Hornady	ELD-X	BT	1.379"	0.270	**0.536†**	**0.271†**
150 gr	Barnes	TSX FB	FB	1.377"	0.279	**0.372†**	**0.188†**
150 gr	Berger	VLD Hunting	BT	1.324"	0.279	**0.519**	**0.262**
150 gr	Hornady	InterLock SP	FB	1.220"	0.279	**0.418**	**0.211**
150 gr	Nosler	AccuBond	BT	1.345"	0.279	**0.465†**	**0.235†**
150 gr	Nosler	Ballistic Silvertip	BT	1.350"	0.279	**0.461†**	**0.233†**
150 gr	Nosler	Partition	FB	1.250"	0.279	**0.432†**	**0.219†**
150 gr	Sierra	GameKing SBT	BT	1.258"	0.279	**0.468†**	**0.237†**
150 gr	Speer	Grand Slam SP	FB	1.170"	0.279	**0.364†**	**0.184†**
150 gr	Speer	Spitzer BT	FB	1.175"	0.279	**0.471**	**0.239**
150 gr	Speer	Spitzer SP Hot-Cor	FB	1.181"	0.279	**0.439†**	**0.222†**
150 gr	Hornady	InterBond	BT	1.378"	0.279	**0.509†**	**0.258†**
150 gr	Hornady	SST	BT	1.365"	0.279	**0.511**	**0.259**
155 gr	Barnes	LRX BT	FB	1.555"	0.289	**0.502**	**0.254**
160 gr	Nosler	Partition	FB	1.303"	0.298	**0.403†**	**0.204†**
165 gr	Nosler	AccuBond Long Range	BT	1.464"	0.307	**0.576†**	**0.292†**
170 gr	Berger	Elite Hunter	BT	1.481"	0.317	**0.655†**	**0.331†**
175 gr	Sierra	Tipped GameKing	BT	1.614"	0.326	**0.551†**	**0.279†**
180 gr	Barnes	Round Nose	FB	1.390"	0.335	**0.352**	**0.178**

.284 Caliber (7mm) — 128 Projectiles

Bore 0.277" (7.04 mm) • Groove / bullet 0.284" (7.21 mm) • 100 gr to 197 gr

S.D. = sectional density. † = BC converted between G1 and G7 or computed from bullet geometry rather than published or measured.

Weight	Maker	Projectile	Base	Length	S.D.	G1 BC	G7 BC
100 gr	Sierra	VarmintKing HP	FB	0.884"	0.177	**0.207†**	**0.105†**
110 gr	Speer	TNT HP	FB	0.954"	0.195	**0.370†**	**0.187†**
110 gr	Barnes	TTSX FB	FB	1.141"	0.195	**0.301**	**0.152**
115 gr	Speer	TNT HP	FB	0.921"	0.204	**0.241†**	**0.122†**
120 gr	Barnes	TSX BT	BT	1.150"	0.213	**0.336†**	**0.170†**
120 gr	Barnes	TTSX BT	BT	1.217"	0.213	**0.361†**	**0.183†**
120 gr	Hornady	HP	FB	1.059"	0.213	**0.324†**	**0.164†**
120 gr	Hornady	V-MAX	FB	1.097"	0.213	**0.361**	**0.183**
120 gr	Nosler	Ballistic Tip	BT	1.133"	0.213	**0.374**	**0.189**
120 gr	Nosler	Flat Point	FB	0.925"	0.213	**0.192†**	**0.097†**
120 gr	Sierra	Pro-Hunter Spitzer	FB	0.972"	0.213	**0.319†**	**0.161†**
130 gr	Sierra	MatchKing HPBT	BT	1.189"	0.230	**0.397**	**0.201**
130 gr	Sierra	Pro-Hunter SPT SSP	FB	1.043"	0.230	**0.316**	**0.160**
130 gr	Speer	Spitzer BTSP	BT	1.060"	0.230	**0.409†**	**0.207†**
130 gr	Speer	Spitzer SP Hot-Cor	FB	1.012"	0.230	**0.355†**	**0.180†**
130 gr	Barnes	TSX BT	BT	1.180"	0.230	**0.366**	**0.185**
139 gr	Hornady	CX	BT	1.416"	0.246	**0.438**	**0.222**
139 gr	Hornady	InterLock BTSP	BT	1.153"	0.246	**0.411**	**0.208**
139 gr	Barnes	LRX BT	BT	1.375"	0.246	**0.425**	**0.215**
139 gr	Hornady	InterLock SP	FB	1.135"	0.246	**0.384**	**0.194**
139 gr	Hornady	SST	BT	1.261"	0.246	**0.460**	**0.233**
139 gr	Hornady	GMX	BT	1.423"	0.246	**0.449**	**0.227**
139 gr	Hornady	InterBond	BT	1.293"	0.246	**0.486**	**0.246**
140 gr	Barnes	TSX BT	BT	1.265"	0.248	**0.380†**	**0.192†**
140 gr	Barnes	TTSX BT	BT	1.360"	0.248	**0.408**	**0.207**
140 gr	Berger	VLD Hunting	BT	1.267"	0.248	**0.508†**	**0.257†**
140 gr	Federal	Trophy Bonded Tip	BT	1.354"	0.248	**0.415†**	**0.210†**
140 gr	Nosler	AccuBond	BT	1.278"	0.248	**0.425**	**0.215**
140 gr	Nosler	Ballistic Silvertip	BT	1.256"	0.248	**0.428**	**0.216**
140 gr	Nosler	Ballistic Tip	FB	1.255"	0.248	**0.451†**	**0.228†**
140 gr	Nosler	E-TIP	BT	1.358"	0.248	**0.419†**	**0.212†**
140 gr	Nosler	Partition	FB	1.160"	0.248	**0.403†**	**0.204†**
140 gr	Sierra	GameKing HPBT	BT	1.179"	0.248	**0.364**	**0.184**
140 gr	Sierra	GameKing SBT	BT	1.135"	0.248	**0.408†**	**0.206†**
140 gr	Sierra	Pro-Hunter Spitzer	FB	1.120"	0.248	**0.368†**	**0.186†**
140 gr	Sierra	Tipped GameKing	BT	1.160"	0.248	**0.536†**	**0.271†**
140 gr	Swift	A-Frame	FB	1.115"	0.248	**0.323†**	**0.163†**
145 gr	Barnes	LRX BT	BT	1.420"	0.257	**0.466†**	**0.236†**
145 gr	Speer	Grand Slam SP	FB	1.110"	0.257	**0.340†**	**0.172†**
145 gr	Speer	HPBT Match	FB	1.150"	0.257	**0.451†**	**0.228†**
145 gr	Speer	Spitzer BTSP	BT	1.165"	0.257	**0.455†**	**0.230†**
145 gr	Speer	Spitzer SP Hot-Cor	FB	1.106"	0.257	**0.401†**	**0.203†**
150 gr	Barnes	TSX BT	BT	1.310"	0.266	**0.393†**	**0.199†**
150 gr	Barnes	TTSX BT	BT	1.433"	0.266	**0.428**	**0.217**
150 gr	Berger	Classic Hunter	BT	1.253"	0.266	**0.509**	**0.258**
150 gr	Hornady	CX	FB	1.493"	0.266	**0.462**	**0.234**

.284 Caliber (7mm) (continued)

Weight	Maker	Projectile	Base	Length	S.D.	G1 BC	G7 BC
150 gr	Hornady	ECX	FB	1.320"	0.266	**0.278†**	**0.141†**
150 gr	Hornady	ELD-X	BT	1.404"	0.266	**0.578**	**0.293**
150 gr	Lapua	Scenar-L	BT	1.339"	0.266	**0.502**	**0.254**
150 gr	Nosler	AccuBond	FB	1.290"	0.266	**0.458†**	**0.232†**
150 gr	Nosler	AccuBond Long Range	BT	1.395"	0.266	**0.590†**	**0.299†**
150 gr	Nosler	Ballistic Tip	BT	1.315"	0.266	**0.463**	**0.234**
150 gr	Nosler	E-TIP	BT	1.424"	0.266	**0.443†**	**0.224†**
150 gr	Nosler	Partition	FB	1.222"	0.266	**0.418**	**0.211**
150 gr	Sierra	GameKing SBT	BT	1.200"	0.266	**0.435†**	**0.220†**
150 gr	Sierra	GameKing TGK	BT	1.260"	0.266	**0.536†**	**0.271†**
150 gr	Sierra	MatchKing HPBT	BT	1.229"	0.266	**0.442**	**0.224**
150 gr	Swift	Scirocco II	BT	1.405"	0.266	**0.482**	**0.244**
151 gr	Warner Tool	Flat Line	BT	1.551"	0.267	**0.702**	**0.355**
152 gr	Barnes	LRX BT	BT	1.465"	0.269	**0.460**	**0.233**
154 gr	Hornady	InterBond	BT	1.371"	0.273	**0.532**	**0.269**
154 gr	Hornady	InterLock SP	FB	1.220"	0.273	**0.416**	**0.211**
154 gr	Hornady	SST	BT	1.355"	0.273	**0.499**	**0.253**
155 gr	Federal	Edge TLR	FB	1.510"	0.275	**0.565**	**0.286**
156 gr	Lapua	Naturalis N564	FB	1.350"	0.276	**0.270†**	**0.137†**
160 gr	Barnes	LRX BT	BT	1.691"	0.283	**0.579**	**0.293**
160 gr	Barnes	TSX FB	FB	1.402"	0.283	**0.378†**	**0.191†**
160 gr	Federal	Trophy Bonded Tip	BT	1.500"	0.283	**0.501†**	**0.254†**
160 gr	Hornady	CX	BT	1.610"	0.283	**0.589**	**0.298**
160 gr	Lapua	Naturalis N510	FB	1.291"	0.283	**0.266†**	**0.135†**
160 gr	Nosler	AccuBond	BT	1.407"	0.283	**0.473**	**0.239**
160 gr	Nosler	Partition	FB	1.270"	0.283	**0.441†**	**0.223†**
160 gr	Sierra	GameKing HPBT	BT	1.297"	0.283	**0.408**	**0.206**
160 gr	Sierra	GameKing SBT	BT	1.258"	0.283	**0.464†**	**0.235†**
160 gr	Sierra	Tipped MatchKing	BT	1.432"	0.283	**0.582**	**0.294**
160 gr	Speer	Grand Slam SP	FB	1.170"	0.283	**0.375†**	**0.190†**
160 gr	Speer	Spitzer BTSP	BT	1.220"	0.283	**0.500†**	**0.253†**
160 gr	Speer	Spitzer SP Hot-Cor	FB	1.235"	0.283	**0.486†**	**0.246†**
160 gr	Swift	A-Frame	FB	1.270"	0.283	**0.434†**	**0.220†**
162 gr	Hornady	SST	BT	1.403"	0.287	**0.540**	**0.273**
162 gr	Hornady	A-MAX	BT	1.420"	0.287	**0.607†**	**0.307†**
162 gr	Hornady	BTHP Match	BT	1.411"	0.287	**0.577**	**0.292**
162 gr	Hornady	ELD Match	BT	1.431"	0.287	**0.628**	**0.318**
162 gr	Hornady	ELD-X	BT	1.484"	0.287	**0.615**	**0.311**
162 gr	Hornady	InterLock BTSP	BT	1.324"	0.287	**0.489†**	**0.247†**
162 gr	Hornady	InterBond	BT	1.370"	0.287	**0.582†**	**0.294†**
165 gr	Norma	Bondstrike Extreme	BT	1.550"	0.292	**0.559**	**0.283**
165 gr	Sierra	Tipped GameKing	BT	1.495"	0.292	**0.600†**	**0.304†**
166 gr	Hornady	A-Tip Match	BT	1.495"	0.294	**0.673**	**0.340**
168 gr	Barnes	LRX BT	BT	1.597"	0.298	**0.516**	**0.261**
168 gr	Berger	Classic Hunter	BT	1.366"	0.298	**0.574**	**0.291**
168 gr	Berger	VLD Hunting	BT	1.426"	0.298	**0.626†**	**0.317†**
168 gr	Berger	VLD Target	BT	1.441"	0.298	**0.631†**	**0.320†**
168 gr	Nosler	AccuBond Long Range	BT	1.519"	0.298	**0.668**	**0.338**
168 gr	Nosler	Custom Competition	BT	1.325"	0.298	**0.520**	**0.263**

.284 Caliber (7mm) (continued)

Weight	Maker	Projectile	Base	Length	S.D.	G1 BC	G7 BC
168 gr	Sierra	MatchKing HPBT	BT	1.365"	0.298	**0.544**	**0.275**
170 gr	Barnes	TTSX BT	FB	1.589"	0.301	**0.494**	**0.250**
170 gr	Norma	Oryx	FB	1.330"	0.301	**0.357†**	**0.181†**
170 gr	Sierra	Pro-Hunter RN	FB	1.225"	0.301	**0.273†**	**0.138†**
171 gr	Barnes	Match Burner BT	BT	1.420"	0.303	**0.615†**	**0.311†**
175 gr	Speer	Grand Slam SP	FB	1.270"	0.310	**0.420†**	**0.213†**
175 gr	Berger	Elite Hunter	BT	1.502"	0.310	**0.664†**	**0.336†**
175 gr	Hornady	ELD-X	BT	1.576"	0.310	**0.673†**	**0.341†**
175 gr	Nosler	AccuBond Long Range	BT	1.538"	0.310	**0.677**	**0.342**
175 gr	Barnes	TSX FB	FB	1.513"	0.310	**0.407**	**0.206**
175 gr	Hornady	InterLock RN	FB	1.240"	0.310	**0.276†**	**0.140†**
175 gr	Hornady	InterLock SP	FB	1.345"	0.310	**0.462**	**0.234**
175 gr	Nosler	Partition	FB	1.363"	0.310	**0.484**	**0.245**
175 gr	Sierra	GameKing SBT	BT	1.403"	0.310	**0.573**	**0.290**
175 gr	Sierra	MatchKing HPBT	BT	1.453"	0.310	**0.631†**	**0.319†**
175 gr	Swift	A-Frame	FB	1.365"	0.310	**0.475†**	**0.241†**
175 gr	Swift	Soft Point	FB	1.365"	0.310	**0.463**	**0.234**
180 gr	Berger	Hybrid Target	BT	1.527"	0.319	**0.678†**	**0.343†**
180 gr	Berger	VLD Hunting	BT	1.516"	0.319	**0.676†**	**0.342†**
180 gr	Berger	VLD Target	BT	1.517"	0.319	**0.683**	**0.346**
180 gr	Hornady	ELD Match	BT	1.541"	0.319	**0.735**	**0.372**
180 gr	Lapua	Scenar-L	BT	1.491"	0.319	**0.629†**	**0.318†**
180 gr	Sierra	MatchKing HPBT	BT	1.458"	0.319	**0.662**	**0.335**
180 gr	Sierra	MatchKing HPBT/CN	BT	1.462"	0.319	**0.665†**	**0.337†**
180 gr	Sierra	Tipped GameKing	BT	1.462"	0.319	**0.622†**	**0.315†**
183 gr	Sierra	MatchKing HPBT/CN	BT	1.630"	0.324	**0.744**	**0.376**
184 gr	Berger	F-Open Hybrid Target	BT	1.575"	0.326	**0.694†**	**0.351†**
185 gr	Nosler	RDF	BT	1.540"	0.328	**0.668†**	**0.338†**
185 gr	Sierra	Tipped MatchKing	BT	1.630"	0.328	**0.740†**	**0.374†**
190 gr	Berger	Long Range Hybrid Target	BT	1.601"	0.337	**0.757**	**0.383**
190 gr	Hornady	A-Tip Match	BT	1.661"	0.337	**0.792**	**0.401**
195 gr	Berger	EOL Elite Hunter	BT	1.628"	0.345	**0.758**	**0.383**
197 gr	Sierra	MatchKing HPBT/CN	BT	1.692"	0.349	**0.767†**	**0.388†**

.308 Caliber (7.62mm) — 293 Projectiles

Bore 0.300" (7.62 mm) • Groove / bullet 0.308" (7.82 mm) • 57 gr to 250 gr

S.D. = sectional density. † = BC converted between G1 and G7 or computed from bullet geometry rather than published or measured.

Weight	Maker	Projectile	Base	Length	S.D.	G1 BC	G7 BC
57 gr	Lapua	FMJ ALS	FB	0.484"	0.086	**0.125**	**0.063**
85 gr	Sierra	Sports Master	FB	0.535"	0.128	**0.100**	**0.051**
86 gr	Hornady	InterLock RN	FB	0.500"	0.130	**0.102†**	**0.052†**
90 gr	Hornady	HP/XTP	FB	0.517"	0.136	**0.124†**	**0.063†**
100 gr	Hornady	InterLock SP	FB	0.562"	0.151	**0.147**	**0.075**
100 gr	Lapua	OTCE G477	FB	0.913"	0.151	**0.164†**	**0.083†**
100 gr	Lapua	Open Tip G580	FB	0.913"	0.151	**0.193†**	**0.098†**
100 gr	Speer	Plinker SPRN	FB	0.670"	0.151	**0.120**	**0.060**
105 gr	Lapua	HP G450	FB	0.996"	0.158	**0.162†**	**0.082†**
110 gr	Hornady	FTX (30 Carbine Critical Defense)	FB	0.650"	0.166	**0.173**	**0.087**

.308 Caliber (7.62mm) (continued)

Weight	Maker	Projectile	Base	Length	S.D.	G1 BC	G7 BC
110 gr	Barnes	TAC-TX FB (300 BLK)	FB	1.173"	0.166	**0.281†**	**0.142†**
110 gr	Barnes	TSX FB	FB	0.955"	0.166	**0.254†**	**0.129†**
110 gr	Berger	FB Target	FB	0.938"	0.166	**0.286†**	**0.145†**
110 gr	Hornady	FMJ RN	FB	0.669"	0.166	**0.173†**	**0.087†**
110 gr	Hornady	InterLock SP	FB	0.827"	0.166	**0.248†**	**0.126†**
110 gr	Hornady	V-MAX	FB	0.918"	0.166	**0.272†**	**0.137†**
110 gr	Nosler	E-TIP	FB	1.095"	0.166	**0.228†**	**0.115†**
110 gr	Nosler	Varmageddon	FB	0.920"	0.166	**0.272†**	**0.138†**
110 gr	Sierra	Pro-Hunter FMJ	FB	0.665"	0.166	**0.142**	**0.072**
110 gr	Sierra	Pro-Hunter RN	FB	0.663"	0.166	**0.146†**	**0.074†**
110 gr	Sierra	VarmintKing HP	FB	0.795"	0.166	**0.187**	**0.095**
110 gr	Speer	Varmint HP	FB	0.620"	0.166	**0.132†**	**0.067†**
110 gr	Barnes	TTSX FB	FB	1.051"	0.166	**0.266†**	**0.135†**
110 gr	Hornady	GMX	BT	1.183"	0.166	**0.292†**	**0.148†**
110 gr	Hornady	InterLock RN	FB	0.680"	0.166	**0.145†**	**0.074†**
110 gr	Speer	Flat Point	FB	0.614"	0.166	**0.141†**	**0.071†**
115 gr	Berger	FB Target	FB	0.940"	0.173	**0.292†**	**0.148†**
120 gr	Barnes	TAC-TX BT	FB	1.245"	0.181	**0.345†**	**0.175†**
123 gr	Lapua	FMJ	BT	0.892"	0.185	**0.266**	**0.135**
125 gr	Hornady	GMX	BT	1.153"	0.188	**0.305**	**0.154**
125 gr	Sierra	Tipped MatchKing	FB	1.108"	0.188	**0.345**	**0.175**
125 gr	Barnes	TSX FB	FB	1.084"	0.188	**0.281**	**0.142**
125 gr	Berger	FB Target	FB	1.026"	0.188	**0.331†**	**0.168†**
125 gr	Cutting Edge	MAXI	FB	1.034"	0.188	**0.202**	**0.102**
125 gr	Hornady	ECX	FB	1.000"	0.188	**0.176†**	**0.089†**
125 gr	Nosler	AccuBond	BT	1.091"	0.188	**0.325**	**0.164**
125 gr	Nosler	Ballistic Tip	BT	1.070"	0.188	**0.332**	**0.168**
125 gr	Sierra	HP/FN Pro-Hunter	FB	0.725"	0.188	**0.151†**	**0.076†**
125 gr	Sierra	MatchKing HP	FB	1.140"	0.188	**0.350**	**0.177**
125 gr	Sierra	Pro-Hunter Spitzer	FB	0.879"	0.188	**0.271†**	**0.137†**
125 gr	Speer	TNT HP	FB	0.920"	0.188	**0.329†**	**0.166†**
125 gr	Hornady	SST	BT	1.045"	0.188	**0.296†**	**0.150†**
130 gr	Hornady	InterLock SP	FB	1.074"	0.196	**0.286†**	**0.145†**
130 gr	Barnes	TSX BT	FB	1.086"	0.196	**0.328†**	**0.166†**
130 gr	Barnes	TTSX BT	BT	1.175"	0.196	**0.342**	**0.173**
130 gr	Lapua	HP G402	FB	0.984"	0.196	**0.202†**	**0.102†**
130 gr	Speer	HP	BT	0.880"	0.196	**0.235†**	**0.119†**
130 gr	Speer	SPFN Hot-Cor	FB	0.829"	0.196	**0.205†**	**0.104†**
135 gr	Berger	FB Target	FB	1.100"	0.203	**0.369†**	**0.187†**
135 gr	Sierra	MatchKing HPBT	BT	1.080"	0.203	**0.365†**	**0.185†**
135 gr	Sierra	VarmintKing HP	FB	0.967"	0.203	**0.260**	**0.132**
135 gr	Hornady	FTX	FB	0.999"	0.203	**0.266†**	**0.134†**
140 gr	Barnes	TSX BT	BT	1.186"	0.211	**0.377**	**0.191**
140 gr	Hornady	MonoFlex	FB	1.186"	0.211	**0.325**	**0.164**
140 gr	Hornady	MonoFlex (30-30)	FB	1.043"	0.211	**0.269**	**0.136**
140 gr	Nosler	Custom Competition HPBT	BT	0.995"	0.211	**0.337**	**0.171**
147 gr	Sellier & Bellot	FMJ	BT	1.089"	0.221	**0.388**	**0.196**
150 gr	Barnes	MPG BT	BT	1.177"	0.226	**0.397**	**0.201**
150 gr	Barnes	MPG FB	FB	1.289"	0.226	**0.344†**	**0.174†**

.308 Caliber (7.62mm) (continued)

Weight	Maker	Projectile	Base	Length	S.D.	G1 BC	G7 BC
150 gr	Barnes	TSX BT	BT	1.237"	0.226	**0.355†**	**0.180†**
150 gr	Barnes	TSX FN FB	FB	1.082"	0.226	**0.177†**	**0.090†**
150 gr	Barnes	TTSX BT	BT	1.300"	0.226	**0.395**	**0.200**
150 gr	Berger	FB Target	FB	1.136"	0.226	**0.395†**	**0.200†**
150 gr	Hornady	CX	BT	1.285"	0.226	**0.411**	**0.208**
150 gr	Hornady	ECX	FB	1.201"	0.226	**0.216†**	**0.109†**
150 gr	Hornady	FMJ BT	BT	1.120"	0.226	**0.401**	**0.203**
150 gr	Hornady	GMX	BT	1.290"	0.226	**0.403†**	**0.204†**
150 gr	Hornady	InterBond	BT	1.285"	0.226	**0.403†**	**0.204†**
150 gr	Hornady	InterLock BTSP	BT	1.096"	0.226	**0.350†**	**0.177†**
150 gr	Hornady	InterLock RN	FB	0.905"	0.226	**0.180†**	**0.091†**
150 gr	Hornady	InterLock SP	FB	1.064"	0.226	**0.328†**	**0.166†**
150 gr	Hornady	SST (300 Savage)	BT	1.112"	0.226	**0.370**	**0.187**
150 gr	Lapua	LockBase B466	FB	1.106"	0.226	**0.419**	**0.212**
150 gr	Lapua	Mega E469	FB	0.949"	0.226	**0.318†**	**0.161†**
150 gr	Lapua	TRX Tipped Solid	BT	1.324"	0.226	**0.375**	**0.190**
150 gr	Norma	Ecostrike	BT	1.286"	0.226	**0.363**	**0.183**
150 gr	Nosler	AccuBond	BT	1.221"	0.226	**0.393**	**0.199**
150 gr	Nosler	Ballistic Silvertip	BT	1.220"	0.226	**0.404†**	**0.205†**
150 gr	Nosler	Ballistic Tip	BT	1.221"	0.226	**0.402**	**0.203**
150 gr	Nosler	E-TIP	BT	1.292"	0.226	**0.387†**	**0.196†**
150 gr	Nosler	Partition	FB	1.100"	0.226	**0.360†**	**0.182†**
150 gr	Sierra	GameKing FMJ BT	BT	1.113"	0.226	**0.402**	**0.204**
150 gr	Sierra	GameKing SBT	BT	1.100"	0.226	**0.364†**	**0.184†**
150 gr	Sierra	GameKing TGK	BT	1.240"	0.226	**0.435†**	**0.220†**
150 gr	Sierra	MatchKing HPBT	BT	1.123"	0.226	**0.396**	**0.200**
150 gr	Sierra	Pro-Hunter RN	FB	0.895"	0.226	**0.209†**	**0.106†**
150 gr	Sierra	Pro-Hunter Spitzer	FB	1.065"	0.226	**0.333†**	**0.169†**
150 gr	Speer	Gold Dot Rifle SP	BT	1.040"	0.226	**0.342†**	**0.173†**
150 gr	Speer	Grand Slam SP	FB	1.090"	0.226	**0.364**	**0.184**
150 gr	Speer	Grand Slam SP/CANN	BT	1.031"	0.226	**0.364**	**0.184**
150 gr	Speer	SPFN Hot-Cor	FB	0.920"	0.226	**0.246†**	**0.124†**
150 gr	Speer	Spitzer BTSP	BT	1.071"	0.226	**0.402†**	**0.203†**
150 gr	Speer	Spitzer SP Hot-Cor	FB	1.015"	0.226	**0.364†**	**0.184†**
150 gr	Swift	Scirocco II	BT	1.270"	0.226	**0.400**	**0.202**
150 gr	Swift	Soft Point	FB	1.065"	0.226	**0.357**	**0.181**
150 gr	Hornady	SST	BT	1.203"	0.226	**0.409**	**0.207**
155 gr	Barnes	Match Burner BT	BT	1.253"	0.233	**0.468†**	**0.237†**
155 gr	Berger	Hybrid Target	BT	1.260"	0.233	**0.484**	**0.245**
155 gr	Berger	VLD Hunting	BT	1.229"	0.233	**0.470**	**0.238**
155 gr	Berger	VLD Target	BT	1.247"	0.233	**0.471**	**0.239**
155 gr	Hornady	ELD Match	BT	1.197"	0.233	**0.458**	**0.232**
155 gr	Lapua	Scenar	BT	1.291"	0.233	**0.463**	**0.234**
155 gr	Lapua	Scenar-L	BT	1.280"	0.233	**0.460**	**0.233**
155 gr	Nosler	Custom Competition	BT	1.145"	0.233	**0.417†**	**0.211†**
155 gr	Sierra	MatchKing HPBT	BT	1.131"	0.233	**0.428**	**0.217**
155 gr	Sierra	Palma MatchKing	BT	1.202"	0.233	**0.463**	**0.234**
155 gr	Sierra	Tipped MatchKing	BT	1.279"	0.233	**0.481†**	**0.243†**
155 gr	Hornady	A-MAX	BT	1.218"	0.233	**0.421**	**0.213**

.308 Caliber (7.62mm) (continued)

Weight	Maker	Projectile	Base	Length	S.D.	G1 BC	G7 BC
155 gr	Hornady	BTHP Match	BT	1.151"	0.233	**0.404**	**0.204**
155.5 gr	Berger	Fullbore Target	BT	1.229"	0.234	**0.475**	**0.240**
155.5 gr	Warner Tool	Flat Line	BT	1.448"	0.234	**0.543**	**0.275**
160 gr	Hornady	FTX	FB	1.131"	0.241	**0.320†**	**0.162†**
160 gr	Hornady	FTX (308 Marlin Express)	FB	1.159"	0.241	**0.383**	**0.194**
160 gr	Warner Tool	Flat Line	FB	1.390"	0.241	**0.538**	**0.272**
165 gr	Hornady	InterBond	BT	1.303"	0.248	**0.434†**	**0.219†**
165 gr	Sierra	GameKing SBT	BT	1.186"	0.248	**0.415†**	**0.210†**
165 gr	Barnes	TSX BT	BT	1.303"	0.248	**0.389**	**0.197**
165 gr	Barnes	TTSX BT	BT	1.385"	0.248	**0.410†**	**0.207†**
165 gr	Hornady	ECX	FB	1.300"	0.248	**0.243†**	**0.123†**
165 gr	Hornady	InterLock BTSP	BT	1.200"	0.248	**0.412**	**0.208**
165 gr	Hornady	InterLock SP	BT	1.201"	0.248	**0.375†**	**0.190†**
165 gr	Lapua	TRX Tipped Solid	BT	1.481"	0.248	**0.480**	**0.243**
165 gr	Nosler	AccuBond	BT	1.321"	0.248	**0.449**	**0.227**
165 gr	Nosler	Ballistic Tip	BT	1.300"	0.248	**0.447**	**0.226**
165 gr	Nosler	Partition	FB	1.173"	0.248	**0.398**	**0.201**
165 gr	Sierra	GameKing TGK	FB	1.398"	0.248	**0.521†**	**0.264†**
165 gr	Speer	Grand Slam SP/CANN	FB	1.080"	0.248	**0.341†**	**0.173†**
165 gr	Speer	Spitzer BTSP	BT	1.215"	0.248	**0.501†**	**0.254†**
165 gr	Swift	A-Frame	FB	1.170"	0.248	**0.354†**	**0.179†**
165 gr	Federal	Trophy Bonded Tip	BT	1.350"	0.248	**0.434†**	**0.220†**
165 gr	Hornady	CX	BT	1.435"	0.248	**0.445†**	**0.225†**
165 gr	Hornady	GMX	BT	1.435"	0.248	**0.441**	**0.223**
165 gr	Hornady	SST	BT	1.274"	0.248	**0.441**	**0.223**
165 gr	Sierra	GameKing HPBT	BT	1.177"	0.248	**0.351**	**0.178**
165 gr	Speer	Spitzer SP Hot-Cor	FB	1.142"	0.248	**0.428†**	**0.217†**
165 gr	Swift	Scirocco II	FB	1.350"	0.248	**0.441**	**0.223**
167 gr	Lapua	Scenar	BT	1.236"	0.251	**0.442**	**0.224**
168 gr	Barnes	TTSX BT	BT	1.416"	0.253	**0.458**	**0.232**
168 gr	Barnes	TSX BT	BT	1.315"	0.253	**0.393**	**0.199**
168 gr	Berger	Classic Hunter	BT	1.237"	0.253	**0.492**	**0.249**
168 gr	Berger	Hybrid Target	BT	1.288"	0.253	**0.520**	**0.263**
168 gr	Berger	VLD Hunting	BT	1.259"	0.253	**0.502**	**0.254**
168 gr	Berger	VLD Target	BT	1.261"	0.253	**0.508**	**0.257**
168 gr	Hornady	A-MAX	BT	1.282"	0.253	**0.456**	**0.231**
168 gr	Hornady	BTHP Match	BT	1.232"	0.253	**0.463**	**0.234**
168 gr	Hornady	ELD Match	BT	1.279"	0.253	**0.508**	**0.257**
168 gr	Norma	Golden Target	BT	1.250"	0.253	**0.411**	**0.208**
168 gr	Nosler	AccuBond Long Range	BT	1.365"	0.253	**0.488†**	**0.247†**
168 gr	Nosler	Ballistic Silvertip	BT	1.307"	0.253	**0.455†**	**0.230†**
168 gr	Nosler	Custom Competition	BT	1.186"	0.253	**0.430**	**0.218**
168 gr	Nosler	E-TIP	BT	1.417"	0.253	**0.439**	**0.222**
168 gr	Nosler	RDF	BT	1.330"	0.253	**0.505†**	**0.255†**
168 gr	Sierra	MatchKing HPBT	BT	1.215"	0.253	**0.437**	**0.221**
168 gr	Sierra	Tipped MatchKing	BT	1.330"	0.253	**0.513†**	**0.259†**
168 gr	Speer	Gold Dot Rifle BTSP	BT	1.145"	0.253	**0.552†**	**0.279†**
168 gr	Speer	HPBT Match	FB	1.215"	0.253	**0.515†**	**0.261†**
170 gr	Hornady	InterLock FP	FB	0.988"	0.256	**0.183†**	**0.093†**

.308 Caliber (7.62mm) (continued)

Weight	Maker	Projectile	Base	Length	S.D.	G1 BC	G7 BC
170 gr	Hornady	InterLock RN	FB	1.016"	0.256	**0.316**	**0.160**
170 gr	Nosler	Flat Point	FB	1.030"	0.256	**0.234**	**0.119**
170 gr	Nosler	Partition	FB	1.030"	0.256	**0.234†**	**0.119†**
170 gr	Sierra	Pro-Hunter	FB	0.996"	0.256	**0.202**	**0.102**
170 gr	Speer	SPFN Hot-Cor	FB	1.016"	0.256	**0.287†**	**0.145†**
170 gr	Lapua	LockBase B476	BT	1.201"	0.256	**0.477†**	**0.241†**
170 gr	Lapua	Naturalis N558	BT	1.250"	0.256	**0.331**	**0.168**
172 gr	Speer	Impact Tipped Plated	BT	1.356"	0.259	**0.561**	**0.284**
174 gr	Hornady	ELD-VT	BT	1.430"	0.262	**0.568**	**0.288**
175 gr	Barnes	LRX BT	BT	1.481"	0.264	**0.493†**	**0.249†**
175 gr	Barnes	Precision Match BT	BT	1.385"	0.264	**0.494**	**0.250**
175 gr	Berger	OTM Tactical	BT	1.258"	0.264	**0.519**	**0.262**
175 gr	Lapua	MaxRange Target	BT	1.350"	0.264	**0.565**	**0.286**
175 gr	Lapua	Scenar-L	BT	1.327"	0.264	**0.491†**	**0.248†**
175 gr	Nosler	RDF	BT	1.321"	0.264	**0.535**	**0.271**
175 gr	Barnes	Match Burner BT	BT	1.335"	0.264	**0.525†**	**0.266†**
175 gr	Berger	Long Range BT Target	BT	1.260"	0.264	**0.518**	**0.262**
175 gr	Berger	VLD Hunting	BT	1.331"	0.264	**0.522**	**0.264**
175 gr	Berger	VLD Target	BT	1.319"	0.264	**0.518†**	**0.262†**
175 gr	Cutting Edge	Maximus	BT	1.515"	0.264	**0.481**	**0.243**
175 gr	Federal	Edge TLR	FB	1.466"	0.264	**0.517**	**0.262**
175 gr	Federal	Terminal Ascent	FB	1.466"	0.264	**0.510**	**0.258**
175 gr	Hornady	BTHP Match	BT	1.232"	0.264	**0.510**	**0.258**
175 gr	Nosler	Custom Competition	BT	1.280"	0.264	**0.497**	**0.251**
175 gr	Sierra	MatchKing HPBT	BT	1.240"	0.264	**0.482†**	**0.244†**
175 gr	Sierra	Tipped MatchKing	BT	1.384"	0.264	**0.528**	**0.267**
178 gr	Hornady	A-MAX	BT	1.318"	0.268	**0.476**	**0.241**
178 gr	Hornady	BTHP Match	BT	1.350"	0.268	**0.525†**	**0.266†**
178 gr	Hornady	ELD Match	BT	1.322"	0.268	**0.533**	**0.270**
178 gr	Hornady	ELD-X	BT	1.383"	0.268	**0.533†**	**0.270†**
180 gr	Hornady	GMX	BT	1.516"	0.271	**0.482**	**0.244**
180 gr	Hornady	InterBond	BT	1.409"	0.271	**0.466†**	**0.236†**
180 gr	Hornady	SST	BT	1.348"	0.271	**0.492**	**0.249**
180 gr	Barnes	TSX BT	BT	1.391"	0.271	**0.445**	**0.225**
180 gr	Barnes	TTSX BT	BT	1.488"	0.271	**0.466†**	**0.236†**
180 gr	Berger	Elite Hunter	BT	1.375"	0.271	**0.569**	**0.288**
180 gr	Cutting Edge	Maximus	FB	1.470"	0.271	**0.498**	**0.252**
180 gr	Federal	Trophy Bonded Tip	BT	1.436"	0.271	**0.482†**	**0.244†**
180 gr	Hornady	InterLock BTSP	FB	1.270"	0.271	**0.438†**	**0.222†**
180 gr	Hornady	InterLock RN	FB	1.168"	0.271	**0.234†**	**0.118†**
180 gr	Hornady	InterLock SP	FB	1.236"	0.271	**0.412†**	**0.209†**
180 gr	Lapua	Naturalis N505	FB	1.256"	0.271	**0.243**	**0.123**
180 gr	Norma	Bondstrike Extreme	BT	1.510"	0.271	**0.502**	**0.254**
180 gr	Norma	Oryx	FB	1.220"	0.271	**0.323†**	**0.163†**
180 gr	Nosler	AccuBond	BT	1.392"	0.271	**0.484**	**0.245**
180 gr	Nosler	Ballistic Tip	BT	1.378"	0.271	**0.475**	**0.240**
180 gr	Nosler	E-TIP	BT	1.482"	0.271	**0.454†**	**0.230†**
180 gr	Nosler	Partition	FB	1.260"	0.271	**0.380**	**0.192**
180 gr	Remington	Core-Lokt PSP	FB	1.150"	0.271	**0.369†**	**0.187†**

.308 Caliber (7.62mm) (continued)

Weight	Maker	Projectile	Base	Length	S.D.	G1 BC	G7 BC
180 gr	Sellier & Bellot	FMJ	BT	1.335"	0.271	**0.480**	**0.243**
180 gr	Sierra	GameKing SBT	BT	1.288"	0.271	**0.487**	**0.247**
180 gr	Sierra	GameKing TGK	FB	1.287"	0.271	**0.498**	**0.252**
180 gr	Sierra	MatchKing HPBT	BT	1.277"	0.271	**0.490†**	**0.248†**
180 gr	Sierra	Pro-Hunter RN	FB	1.092"	0.271	**0.254†**	**0.129†**
180 gr	Sierra	Pro-Hunter Spitzer	FB	1.220"	0.271	**0.401†**	**0.203†**
180 gr	Speer	Grand Slam SP/CANN	FB	1.160"	0.271	**0.361†**	**0.182†**
180 gr	Speer	Spitzer BTSP	BT	1.282"	0.271	**0.525†**	**0.266†**
180 gr	Speer	Spitzer SP Hot-Cor	FB	1.169"	0.271	**0.425†**	**0.215†**
180 gr	Swift	A-Frame	FB	1.215"	0.271	**0.386†**	**0.195†**
180 gr	Swift	Scirocco II	BT	1.417"	0.271	**0.490**	**0.248**
180 gr	Warner Tool	Flat Line	BT	1.613"	0.271	**0.695**	**0.352**
185 gr	Berger	Classic Hunter	BT	1.317"	0.279	**0.540**	**0.273**
185 gr	Berger	VLD Hunting	BT	1.361"	0.279	**0.558**	**0.282**
185 gr	Lapua	Scenar	BT	1.305"	0.279	**0.487**	**0.246**
185 gr	Berger	Hybrid Target	BT	1.415"	0.279	**0.581**	**0.294**
185 gr	Berger	Juggernaut OTM Tactical	BT	1.346"	0.279	**0.560**	**0.284**
185 gr	Berger	Juggernaut Target	BT	1.344"	0.279	**0.555†**	**0.281†**
185 gr	Berger	VLD Target	BT	1.368"	0.279	**0.552**	**0.280**
185 gr	Lapua	FMJBT D46	BT	1.308"	0.279	**0.508†**	**0.257†**
185 gr	Lapua	Mega E415	FB	1.130"	0.279	**0.308†**	**0.156†**
190 gr	Barnes	LRX BT	BT	1.553"	0.286	**0.500**	**0.253**
190 gr	Barnes	Original FN	FB	1.120"	0.286	**0.285†**	**0.144†**
190 gr	Berger	VLD Hunting	BT	1.372"	0.286	**0.575**	**0.291**
190 gr	Hornady	CX	FB	1.653"	0.286	**0.583**	**0.295**
190 gr	Hornady	InterLock BTSP	BT	1.329"	0.286	**0.470**	**0.238**
190 gr	Hornady	Sub-X	FB	1.296"	0.286	**0.431**	**0.218**
190 gr	Nosler	AccuBond Long Range	BT	1.470"	0.286	**0.603†**	**0.305†**
190 gr	Nosler	Custom Competition	BT	1.370"	0.286	**0.536**	**0.271**
190 gr	Sierra	MatchKing HPBT	BT	1.353"	0.286	**0.534†**	**0.270†**
190 gr	Speer	Impact Tipped Plated	BT	1.425"	0.286	**0.589†**	**0.298†**
195 gr	Sierra	Tipped MatchKing	BT	1.465"	0.294	**0.592†**	**0.299†**
195 gr	Hornady	BTHP Match	BT	1.405"	0.294	**0.570**	**0.288**
195 gr	Hornady	ELD Match	BT	1.455"	0.294	**0.581**	**0.294**
198 gr	Warner Tool	Flat Line	BT	1.799"	0.298	**0.808**	**0.409**
200 gr	Barnes	LRX BT	BT	1.623"	0.301	**0.544†**	**0.275†**
200 gr	Barnes	TSX FB	FB	1.496"	0.301	**0.407†**	**0.206†**
200 gr	Berger	Hybrid Target	BT	1.489"	0.301	**0.624**	**0.316**
200 gr	Cutting Edge	Maximus	BT	1.575"	0.301	**0.694**	**0.351**
200 gr	Federal	Edge TLR	BT	1.622"	0.301	**0.603**	**0.305**
200 gr	Federal	Terminal Ascent	FB	1.622"	0.301	**0.601**	**0.304**
200 gr	Hornady	ELD-X	BT	1.534"	0.301	**0.598**	**0.302**
200 gr	Lapua	Mega Hunting	FB	1.213"	0.301	**0.332†**	**0.168†**
200 gr	Lapua	Naturalis N513	FB	1.323"	0.301	**0.324**	**0.164**
200 gr	Lapua	Subsonic FMJBT B416	BT	1.340"	0.301	**0.479**	**0.243**
200 gr	Norma	Oryx	FB	1.252"	0.301	**0.319**	**0.161**
200 gr	Nosler	AccuBond	BT	1.490"	0.301	**0.534**	**0.270**
200 gr	Nosler	Partition	FB	1.356"	0.301	**0.481**	**0.243**
200 gr	Sierra	GameKing SBT	BT	1.397"	0.301	**0.570**	**0.288**

.308 Caliber (7.62mm) (continued)

Weight	Maker	Projectile	Base	Length	S.D.	G1 BC	G7 BC
200 gr	Sierra	MatchKing HPBT	BT	1.387"	0.301	**0.564**	**0.285**
200 gr	Speer	Spitzer SP Hot-Cor	FB	1.270"	0.301	**0.461†**	**0.233†**
200 gr	Swift	A-Frame	FB	1.315"	0.301	**0.428†**	**0.217†**
200.2 gr	Berger	Hybrid Target	BT	1.508"	0.301	**0.648**	**0.328**
205 gr	Sierra	GameKing HPBT	BT	1.350"	0.309	**0.472†**	**0.239†**
205 gr	Berger	Elite Hunter	BT	1.487"	0.309	**0.640**	**0.324**
208 gr	Barnes	LRX BT	BT	1.819"	0.313	**0.624**	**0.316**
208 gr	Berger	Long Range Hybrid Target	BT	1.575"	0.313	**0.700**	**0.354**
208 gr	Hornady	A-MAX	BT	1.532"	0.313	**0.639†**	**0.323†**
208 gr	Hornady	BTHP Match	BT	1.488"	0.313	**0.622†**	**0.315†**
208 gr	Hornady	ELD Match	BT	1.539"	0.313	**0.660†**	**0.334†**
210 gr	Berger	Long Range BT Target	BT	1.458"	0.316	**0.638**	**0.323**
210 gr	Berger	VLD Hunting	BT	1.469"	0.316	**0.637**	**0.322**
210 gr	Berger	VLD Target	BT	1.459"	0.316	**0.630**	**0.319**
210 gr	Nosler	AccuBond Long Range	BT	1.571"	0.316	**0.681†**	**0.345†**
210 gr	Nosler	RDF	FB	1.516"	0.316	**0.657**	**0.332**
210 gr	Sierra	MatchKing HPBT	BT	1.478"	0.316	**0.634**	**0.321**
212 gr	Barnes	LRX BT Bore Rider	BT	1.866"	0.319	**0.725**	**0.367**
212 gr	Hornady	ELD-X	BT	1.589"	0.319	**0.670†**	**0.339†**
215 gr	Berger	Hybrid Target	BT	1.589"	0.324	**0.700**	**0.354**
220 gr	Hornady	ELD-X	BT	1.623"	0.331	**0.639†**	**0.323†**
220 gr	Berger	Long Range Hybrid Target	BT	1.597"	0.331	**0.731**	**0.370**
220 gr	Hornady	InterLock RN	FB	1.283"	0.331	**0.291†**	**0.147†**
220 gr	Lapua	Scenar-L	BT	1.560"	0.331	**0.621**	**0.314**
220 gr	Nosler	Custom Competition	BT	1.512"	0.331	**0.613†**	**0.310†**
220 gr	Nosler	Partition	FB	1.370"	0.331	**0.326†**	**0.165†**
220 gr	Sierra	MatchKing HPBT	BT	1.488"	0.331	**0.621**	**0.314**
220 gr	Sierra	Pro-Hunter RN	FB	1.303"	0.331	**0.303†**	**0.153†**
225 gr	Hornady	ELD Match	BT	1.658"	0.339	**0.758**	**0.383**
225 gr	Hornady	BTHP Match	BT	1.578"	0.339	**0.669**	**0.338**
230 gr	Sierra	MatchKing	BT	1.775"	0.346	**0.787**	**0.398**
230 gr	Berger	Hybrid OTM Tactical	BT	1.597"	0.346	**0.722**	**0.366**
230 gr	Berger	Hybrid Target	BT	1.681"	0.346	**0.734†**	**0.371†**
230 gr	Hornady	A-Tip Match	BT	1.780"	0.346	**0.819**	**0.414**
240 gr	Sierra	MatchKing HPBT	BT	1.591"	0.361	**0.664**	**0.336**
245 gr	Berger	EOL Elite Hunter	BT	1.775"	0.369	**0.816**	**0.413**
245 gr	Berger	Long Range Hybrid Target	BT	1.775"	0.369	**0.840**	**0.425**
250 gr	Hornady	A-Tip Match	BT	1.870"	0.376	**0.872†**	**0.441†**

.323 Caliber (8.2mm) — 28 Projectiles

Bore 0.315" (8.00 mm) • Groove / bullet 0.323" (8.20 mm) • 125 gr to 220 gr

S.D. = sectional density. † = BC converted between G1 and G7 or computed from bullet geometry rather than published or measured.

Weight	Maker	Projectile	Base	Length	S.D.	G1 BC	G7 BC
125 gr	Hornady	Spitzer SP	FB	0.839"	0.171	**0.239†**	**0.121†**
150 gr	Sierra	Pro-Hunter SP	FB	0.984"	0.205	**0.324†**	**0.164†**
150 gr	Hornady	InterLock SP	FB	0.976"	0.205	**0.281†**	**0.142†**
160 gr	Barnes	TSX FB	FB	1.232"	0.219	**0.385**	**0.195**
160 gr	Barnes	TTSX BT	FB	1.279"	0.219	**0.385†**	**0.195†**

.323 Caliber (8.2mm) (continued)

Weight	Maker	Projectile	Base	Length	S.D.	G1 BC	G7 BC
170 gr	Hornady	SST	BT	1.260"	0.233	**0.432†**	**0.218†**
170 gr	Hornady	InterLock RN	FB	0.858"	0.233	**0.210†**	**0.107†**
170 gr	Speer	Spitzer SP Hot-Cor	FB	1.028"	0.233	**0.300**	**0.152**
175 gr	Sierra	Pro-Hunter SP	FB	1.122"	0.240	**0.372†**	**0.188†**
180 gr	Hornady	GMX	BT	1.470"	0.246	**0.446†**	**0.226†**
180 gr	Barnes	TSX BT	BT	1.234"	0.246	**0.367†**	**0.186†**
180 gr	Lapua	Naturalis N559	FB	1.244"	0.246	**0.355**	**0.179**
180 gr	Nosler	Ballistic Tip	FB	1.280"	0.246	**0.366†**	**0.185†**
180 gr	Nosler	E-TIP	FB	1.365"	0.246	**0.397†**	**0.201†**
180 gr	Nosler	Partition	BT	1.457"	0.246	**0.425**	**0.215**
185 gr	Remington	PSPCL	BT	1.207"	0.253	**0.289**	**0.146**
195 gr	Hornady	InterLock SP	FB	1.102"	0.267	**0.398†**	**0.201†**
196 gr	Hornady	BTHP Match	FB	1.378"	0.268	**0.509†**	**0.258†**
196 gr	Hornady	InterLock SP	FB	1.217"	0.268	**0.435**	**0.220**
196 gr	Norma	Oryx	FB	1.138"	0.268	**0.333†**	**0.168†**
200 gr	Barnes	TSX BT	BT	1.354"	0.274	**0.406†**	**0.205†**
200 gr	Nosler	AccuBond	BT	1.390"	0.274	**0.418†**	**0.212†**
200 gr	Nosler	Partition	FB	1.240"	0.274	**0.348†**	**0.176†**
200 gr	Sierra	MatchKing HPBT	BT	1.311"	0.274	**0.512†**	**0.259†**
200 gr	Speer	Spitzer SP Hot-Cor	FB	1.215"	0.274	**0.403†**	**0.204†**
220 gr	Sierra	GameKing SBT	BT	1.394"	0.301	**0.508†**	**0.257†**
220 gr	Swift	A-Frame	FB	1.323"	0.301	**0.379†**	**0.192†**
220 gr	Hornady	Spitzer SP	FB	1.323"	0.301	**0.450†**	**0.228†**

.338 Caliber (8.6mm) — 67 Projectiles

Bore 0.330" (8.38 mm) • Groove / bullet 0.338" (8.59 mm) • 160 gr to 300 gr

S.D. = sectional density. † = BC converted between G1 and G7 or computed from bullet geometry rather than published or measured.

Weight	Maker	Projectile	Base	Length	S.D.	G1 BC	G7 BC
160 gr	Barnes	TTSX FB	FB	1.219"	0.200	**0.329†**	**0.167†**
175 gr	Barnes	TSX FB	FB	1.231"	0.219	**0.371**	**0.188**
180 gr	Nosler	AccuBond	BT	1.241"	0.225	**0.396**	**0.200**
185 gr	Barnes	TTSX BT	BT	1.350"	0.231	**0.408†**	**0.207†**
185 gr	Hornady	CX	BT	1.403"	0.231	**0.413**	**0.209**
185 gr	Barnes	TSX BT	FB	1.228"	0.231	**0.339†**	**0.172†**
185 gr	Hornady	GMX	BT	1.424"	0.231	**0.407**	**0.206**
200 gr	Federal	Fusion	FB	1.120"	0.250	**0.411†**	**0.208†**
200 gr	Hornady	FTX ME	BT	1.225"	0.250	**0.423**	**0.214**
200 gr	Hornady	InterLock SP	FB	1.212"	0.250	**0.350†**	**0.177†**
200 gr	Hornady	SST	BT	1.316"	0.250	**0.460**	**0.233**
200 gr	Nosler	AccuBond	BT	1.338"	0.250	**0.385†**	**0.195†**
200 gr	Nosler	Ballistic Silvertip	BT	1.340"	0.250	**0.385†**	**0.195†**
200 gr	Nosler	E-TIP	BT	1.428"	0.250	**0.395†**	**0.200†**
200 gr	Speer	Spitzer SP Hot-Cor	FB	1.118"	0.250	**0.411†**	**0.208†**
210 gr	Barnes	TSX BT	FB	1.352"	0.263	**0.389†**	**0.197†**
210 gr	Barnes	TTSX BT	BT	1.466"	0.263	**0.460†**	**0.233†**
210 gr	Nosler	Partition	FB	1.200"	0.263	**0.372†**	**0.188†**
210 gr	Swift	Scirocco II	FB	1.394"	0.263	**0.489†**	**0.247†**
215 gr	Sierra	GameKing SBT	BT	1.274"	0.269	**0.474†**	**0.240†**

.338 Caliber (8.6mm) (continued)

Weight	Maker	Projectile	Base	Length	S.D.	G1 BC	G7 BC
225 gr	Hornady	InterBond	BT	1.409"	0.281	**0.417†**	**0.211†**
225 gr	Hornady	SST	BT	1.428"	0.281	**0.520†**	**0.263†**
225 gr	Barnes	TTSX BT	BT	1.550"	0.281	**0.499**	**0.252**
225 gr	Speer	Grand Slam SP	FB	1.160"	0.281	**0.350**	**0.177**
225 gr	Barnes	TSX FB	FB	1.418"	0.281	**0.372†**	**0.188†**
225 gr	Hornady	InterLock SP	FB	1.316"	0.281	**0.385†**	**0.195†**
225 gr	Nosler	AccuBond	BT	1.450"	0.281	**0.511†**	**0.259†**
225 gr	Nosler	Partition	FB	1.300"	0.281	**0.422†**	**0.214†**
225 gr	Sierra	Pro-Hunter Spitzer	FB	1.260"	0.281	**0.451†**	**0.228†**
225 gr	Swift	A-Frame	FB	1.245"	0.281	**0.370†**	**0.187†**
230 gr	Hornady	ELD-X	FB	1.515"	0.288	**0.611**	**0.309**
231 gr	Lapua	Naturalis LR N508	FB	1.354"	0.289	**0.369**	**0.187**
250 gr	Barnes	LRX BT	BT	1.713"	0.313	**0.579†**	**0.293†**
250 gr	Barnes	TSX FB	FB	1.549"	0.313	**0.409†**	**0.207†**
250 gr	Berger	Elite Hunter	BT	1.623"	0.313	**0.685**	**0.346**
250 gr	Berger	OTM Tactical	BT	1.628"	0.313	**0.686**	**0.347**
250 gr	Hornady	BTHP	BT	1.568"	0.313	**0.631**	**0.319**
250 gr	Hornady	InterLock RN	FB	1.260"	0.313	**0.282†**	**0.143†**
250 gr	Hornady	InterLock SP	FB	1.357"	0.313	**0.418†**	**0.212†**
250 gr	Lapua	LockBase B408	BT	1.457"	0.313	**0.599**	**0.303**
250 gr	Lapua	Scenar	BT	1.551"	0.313	**0.637**	**0.322**
250 gr	Nosler	AccuBond	BT	1.550"	0.313	**0.534†**	**0.270†**
250 gr	Nosler	Partition	FB	1.375"	0.313	**0.440†**	**0.222†**
250 gr	Sierra	GameKing SBT	BT	1.425"	0.313	**0.538**	**0.272**
250 gr	Sierra	MatchKing HPBT	BT	1.555"	0.313	**0.609†**	**0.308†**
250 gr	Swift	A-Frame	FB	1.335"	0.313	**0.412†**	**0.208†**
256 gr	Warner Tool	Flat Line	BT	1.900"	0.320	**0.807**	**0.408**
265 gr	Barnes	LRX BT	BT	1.786"	0.331	**0.602†**	**0.305†**
265 gr	Nosler	AccuBond Long Range	BT	1.680"	0.331	**0.730**	**0.369**
270 gr	Hornady	ELD-X	BT	1.720"	0.338	**0.745**	**0.377**
275 gr	Speer	Spitzer SP	FB	1.335"	0.344	**0.480†**	**0.243†**
275 gr	Swift	A-Frame	FB	1.435"	0.344	**0.452†**	**0.229†**
280 gr	Barnes	LRX BT	BT	1.860"	0.350	**0.644†**	**0.326†**
285 gr	Hornady	A-MAX	BT	1.762"	0.356	**0.734**	**0.371**
285 gr	Barnes	TSX BT	BT	1.798"	0.356	**0.587**	**0.297**
285 gr	Hornady	BTHP Match	BT	1.716"	0.356	**0.733†**	**0.371†**
285 gr	Hornady	ELD Match	BT	1.726"	0.356	**0.786**	**0.398**
285 gr	Warner Tool	Flat Line	FB	2.050"	0.356	**0.935**	**0.473**
300 gr	Berger	Elite Hunter	BT	1.810"	0.375	**0.836**	**0.423**
300 gr	Berger	Hybrid OTM Tactical	BT	1.823"	0.375	**0.838**	**0.424**
300 gr	Hornady	A-Tip Match	BT	1.870"	0.375	**0.859**	**0.435**
300 gr	Lapua	Scenar	BT	1.733"	0.375	**0.754†**	**0.381†**
300 gr	Norma	HPBT Match	BT	1.750"	0.375	**0.727**	**0.368**
300 gr	Nosler	AccuBond	FB	1.750"	0.375	**0.669†**	**0.339†**
300 gr	Nosler	AccuBond Long Range	FB	1.875"	0.375	**0.730†**	**0.369†**
300 gr	Nosler	RDF	BT	1.910"	0.375	**0.768†**	**0.388†**
300 gr	Sierra	MatchKing HPBT	BT	1.700"	0.375	**0.757**	**0.383**

.358 Caliber (9.1mm) — 22 Projectiles

Bore 0.348" (8.84 mm) • Groove / bullet 0.358" (9.09 mm) • 158 gr to 250 gr

S.D. = sectional density. † = BC converted between G1 and G7 or computed from bullet geometry rather than published or measured.

Weight	Maker	Projectile	Base	Length	S.D.	G1 BC	G7 BC
158 gr	Hornady	FP/XTP	FB	0.664"	0.176	**0.193†**	**0.098†**
158 gr	Hornady	HP/XTP	FB	0.671"	0.176	**0.200†**	**0.101†**
158 gr	Speer	UCHP	FB	0.645"	0.176	**0.157**	**0.080**
180 gr	Barnes	TSX FN FB	FB	1.026"	0.201	**0.186†**	**0.094†**
180 gr	Hornady	InterLock SP-SSP	FB	0.984"	0.201	**0.241**	**0.122**
180 gr	Barnes	TTSX FB	FB	1.197"	0.201	**0.284†**	**0.144†**
180 gr	Sierra	FPJ Match	FB	0.756"	0.201	**0.143†**	**0.072†**
180 gr	Speer	FSP	FB	0.890"	0.201	**0.236**	**0.120**
200 gr	Barnes	TSX FB	FB	1.179"	0.223	**0.274†**	**0.138†**
200 gr	Barnes	TTSX BT	FB	1.299"	0.223	**0.355†**	**0.180†**
200 gr	Hornady	FTX	FB	1.043"	0.223	**0.291†**	**0.147†**
200 gr	Nosler	AccuBond	FB	1.216"	0.223	**0.339†**	**0.172†**
200 gr	Sierra	RN	FB	0.874"	0.223	**0.144†**	**0.073†**
220 gr	Speer	SPFN Hot-Cor	FB	1.031"	0.245	**0.276**	**0.140**
225 gr	Barnes	TSX	FB	1.307"	0.251	**0.346†**	**0.175†**
225 gr	Nosler	AccuBond	FB	1.378"	0.251	**0.394†**	**0.199†**
225 gr	Nosler	Partition	FB	1.177"	0.251	**0.397†**	**0.201†**
225 gr	Sierra	SBT	FB	1.157"	0.251	**0.361†**	**0.183†**
250 gr	Hornady	InterLock RN	FB	1.101"	0.279	**0.263**	**0.133**
250 gr	Hornady	SP	FB	1.302"	0.279	**0.364**	**0.184**
250 gr	Nosler	Partition	FB	1.272"	0.279	**0.415†**	**0.210†**
250 gr	Speer	Spitzer SP Hot-Cor	FB	1.232"	0.279	**0.407†**	**0.206†**

.375 Caliber (9.5mm) — 38 Projectiles

Bore 0.366" (9.30 mm) • Groove / bullet 0.375" (9.53 mm) • 200 gr to 410 gr

S.D. = sectional density. † = BC converted between G1 and G7 or computed from bullet geometry rather than published or measured.

Weight	Maker	Projectile	Base	Length	S.D.	G1 BC	G7 BC
200 gr	Sierra	FN	FB	0.831"	0.203	**0.190†**	**0.096†**
220 gr	Hornady	FP	FB	0.902"	0.223	**0.210†**	**0.107†**
225 gr	Hornady	InterLock SP-RP	FB	1.120"	0.229	**0.310†**	**0.157†**
235 gr	Barnes	TSX FB	FB	1.264"	0.239	**0.260†**	**0.132†**
235 gr	Speer	SP	FB	1.040"	0.239	**0.290**	**0.147**
250 gr	Hornady	GMX	FB	1.547"	0.254	**0.417†**	**0.211†**
250 gr	Barnes	TTSX BT	FB	1.441"	0.254	**0.408†**	**0.207†**
250 gr	Hornady	CX	FB	1.400"	0.254	**0.408**	**0.207**
250 gr	Sierra	SBT	FB	1.185"	0.254	**0.345†**	**0.174†**
250 gr	Speer	TBBC SP	FB	1.216"	0.254	**0.276†**	**0.140†**
255 gr	Barnes	FP	FB	1.055"	0.259	**0.279**	**0.141**
260 gr	Nosler	AccuBond	FB	1.394"	0.264	**0.440†**	**0.222†**
260 gr	Nosler	Partition	FB	1.146"	0.264	**0.292†**	**0.148†**
270 gr	Barnes	Banded Solid	FB	1.295"	0.274	**0.199**	**0.101**
270 gr	Barnes	LRX BT	FB	1.512"	0.274	**0.425**	**0.215**
270 gr	Barnes	TSX FB	FB	1.370"	0.274	**0.314†**	**0.159†**
270 gr	Speer	Spitzer BTSP	FB	1.310"	0.274	**0.461†**	**0.233†**
270 gr	Swift	A-Frame	FB	1.200"	0.274	**0.337†**	**0.170†**
270 gr	Woodleigh	RNSP	FB	1.088"	0.274	**0.241**	**0.122**

.375 Caliber (9.5mm) (continued)

Weight	Maker	Projectile	Base	Length	S.D.	G1 BC	G7 BC
285 gr	Speer	Grand Slam SP/CANN	FB	1.216"	0.290	**0.341**	**0.173**
300 gr	Barnes	Banded Solid	FB	1.422"	0.305	**0.222**	**0.112**
300 gr	Barnes	TSX FB	FB	1.493"	0.305	**0.344†**	**0.174†**
300 gr	Hornady	DGS	FB	1.291"	0.305	**0.267†**	**0.135†**
300 gr	Hornady	DGX	FB	1.291"	0.305	**0.267†**	**0.135†**
300 gr	Hornady	InterLock BTSP	FB	1.420"	0.305	**0.446†**	**0.226†**
300 gr	Hornady	InterLock RN	FB	1.185"	0.305	**0.242†**	**0.123†**
300 gr	Nosler	AccuBond	BT	1.527"	0.305	**0.488**	**0.247**
300 gr	Sierra	SBT	BT	1.372"	0.305	**0.463**	**0.234**
300 gr	Speer	TBBC SP	FB	1.394"	0.305	**0.324†**	**0.164†**
300 gr	Swift	A-Frame	FB	1.270"	0.305	**0.313†**	**0.159†**
350 gr	Barnes	Banded Solid	FB	1.638"	0.356	**0.273**	**0.138**
350 gr	Barnes	TSX FB	FB	1.691"	0.356	**0.409†**	**0.207†**
350 gr	Sierra	MatchKing HPBT/CN	BT	1.783"	0.356	**0.754†**	**0.382†**
361 gr	Warner Tool	Flat Line	FB	2.200"	0.367	**0.936**	**0.473**
379 gr	Berger	ELR Match Solid	BT	2.236"	0.385	**0.962**	**0.487**
400 gr	Warner Tool	Flat Line	FB	2.350"	0.406	**1.064**	**0.538**
407 gr	Berger	ELR Match Solid	BT	2.347"	0.413	**1.034**	**0.523**
410 gr	Berger	Hybrid Target	BT	2.037"	0.417	**0.939**	**0.475**

.458 Caliber (11.63mm) — 32 Projectiles

Bore 0.450" (11.43 mm) • Groove / bullet 0.458" (11.63 mm) • 250 gr to 500 gr

S.D. = sectional density. † = BC converted between G1 and G7 or computed from bullet geometry rather than published or measured.

Weight	Maker	Projectile	Base	Length	S.D.	G1 BC	G7 BC
250 gr	Barnes	TSX FN FB	FB	0.917"	0.170	**0.131†**	**0.066†**
250 gr	Hornady	MonoFlex	FB	1.024"	0.170	**0.160†**	**0.081†**
300 gr	Barnes	Barnes Original FN FB	FB	0.792"	0.204	**0.219†**	**0.111†**
300 gr	Barnes	Barnes Original Semi Spitzer	FB	0.941"	0.204	**0.280†**	**0.142†**
300 gr	Barnes	TSX FB	FB	1.091"	0.204	**0.225†**	**0.114†**
300 gr	Barnes	TSX FN FB	FB	1.048"	0.204	**0.157†**	**0.079†**
300 gr	Barnes	TTSX BT	FB	1.235"	0.204	**0.227†**	**0.115†**
300 gr	Hornady	InterLock HP	FB	0.728"	0.204	**0.191†**	**0.097†**
300 gr	Nosler	Ballistic Tip	FB	0.960"	0.204	**0.232†**	**0.118†**
300 gr	Nosler	Partition PP	FB	0.830"	0.204	**0.185†**	**0.094†**
300 gr	Sierra	HP/FN Pro-Hunter	FB	0.778"	0.204	**0.118**	**0.060**
300 gr	Speer	HP	FB	0.829"	0.204	**0.199**	**0.101**
350 gr	Barnes	TSX FB	FB	1.229"	0.238	**0.313†**	**0.158†**
350 gr	Hornady	InterLock FP	FB	0.896"	0.238	**0.189†**	**0.096†**
350 gr	Hornady	InterLock RN	FB	0.936"	0.238	**0.188†**	**0.095†**
350 gr	Speer	SPFN Hot-Cor	FB	0.976"	0.238	**0.210†**	**0.106†**
350 gr	Swift	A-Frame FN	FB	0.964"	0.238	**0.164†**	**0.083†**
400 gr	Barnes	Barnes Original FN FB	FB	1.017"	0.272	**0.291†**	**0.147†**
400 gr	Barnes	Barnes Original Semi Spitzer	FB	1.160"	0.272	**0.375†**	**0.190†**
400 gr	Barnes	Buster FN FB	FB	1.079"	0.272	**0.233†**	**0.118†**
400 gr	Speer	SPFN Hot-Cor	FB	0.972"	0.272	**0.250†**	**0.126†**
400 gr	Swift	A-Frame FN	FB	1.130"	0.272	**0.249†**	**0.126†**
410 gr	Hornady	Sub-X	FB	1.160"	0.279	**0.276†**	**0.140†**
450 gr	Barnes	Banded Solid RN	FB	1.443"	0.306	**0.257†**	**0.130†**
450 gr	Barnes	TSX FB	FB	1.526"	0.306	**0.355†**	**0.180†**

.458 Caliber (11.63mm) (continued)

Weight	Maker	Projectile	Base	Length	S.D.	G1 BC	G7 BC
480 gr	Hornady	DGS	FB	1.323"	0.327	**0.276†**	**0.140†**
480 gr	Hornady	DGX	FB	1.323"	0.327	**0.276†**	**0.140†**
500 gr	Barnes	Banded Solid RN	FB	1.589"	0.341	**0.290†**	**0.147†**
500 gr	Barnes	TSX FB	FB	1.663"	0.341	**0.397†**	**0.201†**
500 gr	Hornady	DGX	FB	1.382"	0.341	**0.331†**	**0.167†**
500 gr	Hornady	InterLock RN	FB	1.301"	0.341	**0.278†**	**0.141†**
500 gr	Nosler	Partition PP	FB	1.444"	0.341	**0.317†**	**0.160†**

Part VIII

Powders

The table below orders propellants from fastest (#001) to slowest (#143) relative burn rate, together with each propellant's maker, grain type, estimated bulk density and estimated heat of explosion. Within each published test (same cartridge, bullet and data source), a slower powder requires a heavier maximum charge; the burn rate order fits every powder's relative charge weight across all of the tests in which it appears. Powders that appear in fewer than three tests are listed unranked (-) at the end of the table.

This order is a relative guide for selecting candidate powders, not a substitute for published load data; see Chapter 14 for propellant types, burn-rate mechanics and storage rules. NEVER treat powders that sit next to each other on any burn rate chart as interchangeable: a powder one position faster can produce dangerous overpressure if substituted grain for grain.

Rank	Powder	Maker	Grain Type	Est. Density	Est. Heat of Exp.
#001	**Trail Boss**	Hodgdon	Single-perforated Extruded	310 g/L	3,500 kJ/kg
#002	**N105**	Vihtavuori	Single-perforated Extruded	730 g/L	3,950 kJ/kg
#003	**No. 9**	Accurate	Spherical / Ball	970 g/L	4,000 kJ/kg
#004	**R123**	Norma	Single-perforated Extruded	920 g/L	4,000 kJ/kg
#005	**2400**	Alliant	Extruded (General)	905 g/L	3,780 kJ/kg
#006	**N110**	Vihtavuori	Single-perforated Extruded	800 g/L	3,950 kJ/kg
#007	**4100**	Accurate	Spherical / Ball	950 g/L	4,087 kJ/kg
#008	**H4227**	Hodgdon	Single-perforated Extruded	870 g/L	3,880 kJ/kg
#009	**RS30**	Reload Swiss	Extruded (General)	820 g/L	4,000 kJ/kg
#010	**H110**	Hodgdon	Spherical / Ball	970 g/L	4,300 kJ/kg
#011	**No. 11FS**	Accurate	Spherical / Ball	990 g/L	3,950 kJ/kg
#012	**4227**	IMR	Single-perforated Extruded	880 g/L	4,020 kJ/kg
#013	**Power Pro 300-MP**	Alliant	Spherical / Ball	950 g/L	3,600 kJ/kg
#014	**5744**	Accurate	Single-perforated Extruded	860 g/L	4,310 kJ/kg
#015	**Lil'Gun**	Hodgdon	Spherical / Ball	890 g/L	3,752 kJ/kg
#016	**SBR-SOCOM**	Shooters World	Spherical / Ball	970 g/L	4,100 kJ/kg
#017	**N120**	Vihtavuori	Single-perforated Extruded	860 g/L	3,620 kJ/kg
#018	**RS36**	Reload Swiss	Single-perforated Extruded	910 g/L	3,950 kJ/kg
#019	**4198**	IMR	Single-perforated Extruded	830 g/L	4,024 kJ/kg
#020	**H4198**	Hodgdon	Single-perforated Extruded	870 g/L	3,680 kJ/kg
#021	**Reloder 7**	Alliant	Single-perforated Extruded	940 g/L	3,600 kJ/kg
#022	**Blackout**	Shooters World	Spherical / Ball	980 g/L	3,950 kJ/kg
#023	**LT-30**	Accurate	Single-perforated Extruded	992 g/L	3,620 kJ/kg
#024	**N130**	Vihtavuori	Single-perforated Extruded	870 g/L	3,700 kJ/kg
#025	**1680**	Accurate	Spherical / Ball	970 g/L	3,900 kJ/kg
#026	**CFE BLK**	Hodgdon	Spherical / Ball	970 g/L	3,800 kJ/kg
#027	**Reloder 10x**	Alliant	Single-perforated Extruded	885 g/L	3,850 kJ/kg
#028	**200**	Norma	Single-perforated Extruded	920 g/L	3,940 kJ/kg
#029	**LT-32**	Accurate	Extruded (General)	906 g/L	3,800 kJ/kg
#030	**Power Pro 1200-R**	Alliant	Spherical / Ball	980 g/L	3,950 kJ/kg
#031	**2200**	Accurate	Spherical / Ball	880 g/L	4,000 kJ/kg
#032	**N133**	Vihtavuori	Single-perforated Extruded	870 g/L	3,600 kJ/kg

Rank	Powder	Maker	Grain Type	Est. Density	Est. Heat of Exp.
#033	**2015**	Accurate	Single-perforated Extruded	962 g/L	3,650 kJ/kg
#034	**H322**	Hodgdon	Single-perforated Extruded	940 g/L	3,650 kJ/kg
#035	**N530**	Vihtavuori	Single-perforated Extruded	930 g/L	3,950 kJ/kg
#036	**RS40**	Reload Swiss	Single-perforated Extruded	940 g/L	3,950 kJ/kg
#037	**The Patriot**	Shooters World	Spherical / Ball	975 g/L	3,667 kJ/kg
#038	**3031**	IMR	Single-perforated Extruded	935 g/L	3,620 kJ/kg
#039	**N135**	Vihtavuori	Single-perforated Extruded	870 g/L	3,550 kJ/kg
#040	**Benchmark**	Hodgdon	Single-perforated Extruded	906 g/L	3,620 kJ/kg
#041	**AR-Comp**	Alliant	Extruded (General)	932 g/L	3,620 kJ/kg
#042	**AR Plus**	Shooters World	Spherical / Ball	986 g/L	3,600 kJ/kg
#043	**2230**	Accurate	Spherical / Ball	986 g/L	3,710 kJ/kg
#044	**X-Terminator**	Ramshot	Spherical / Ball	986 g/L	4,000 kJ/kg
#045	**8208 XBR**	IMR	Single-perforated Extruded	920 g/L	3,720 kJ/kg
#046	**H335**	Hodgdon	Spherical / Ball	1010 g/L	3,800 kJ/kg
#047	**H4895**	Hodgdon	Single-perforated Extruded	964 g/L	3,670 kJ/kg
#048	**2460**	Accurate	Spherical / Ball	996 g/L	3,680 kJ/kg
#049	**201**	Norma	Single-perforated Extruded	900 g/L	3,980 kJ/kg
#050	**2495**	Accurate	Single-perforated Extruded	992 g/L	3,750 kJ/kg
#051	**4166**	IMR	Single-perforated Extruded	900 g/L	3,640 kJ/kg
#052	**202**	Norma	Single-perforated Extruded	920 g/L	3,760 kJ/kg
#053	**Tactical Rifle**	Shooters World	Spherical / Ball	970 g/L	3,950 kJ/kg
#054	**4895**	IMR	Single-perforated Extruded	966 g/L	3,640 kJ/kg
#055	**TAC**	Ramshot	Spherical / Ball	938 g/L	3,750 kJ/kg
#056	**4064**	IMR	Single-perforated Extruded	933 g/L	3,790 kJ/kg
#057	**N140**	Vihtavuori	Single-perforated Extruded	910 g/L	3,700 kJ/kg
#058	**RS50**	Reload Swiss	Single-perforated Extruded	950 g/L	3,750 kJ/kg
#059	**Varget**	Hodgdon	Single-perforated Extruded	960 g/L	3,620 kJ/kg
#060	**RS52**	Reload Swiss	Single-perforated Extruded	950 g/L	3,900 kJ/kg
#061	**Power Pro Varmint**	Alliant	Spherical / Ball	945 g/L	3,680 kJ/kg
#062	**N150**	Vihtavuori	Single-perforated Extruded	910 g/L	3,750 kJ/kg
#063	**4320**	IMR	Single-perforated Extruded	992 g/L	3,600 kJ/kg
#064	**Precision Rifle**	Shooters World	Single-perforated Extruded	900 g/L	3,600 kJ/kg
#065	**4064**	Accurate	Single-perforated Extruded	900 g/L	3,750 kJ/kg
#066	**203B**	Norma	Single-perforated Extruded	920 g/L	3,910 kJ/kg
#067	**2520**	Accurate	Spherical / Ball	970 g/L	3,730 kJ/kg
#068	**Reloder 15**	Alliant	Single-perforated Extruded	935 g/L	3,990 kJ/kg
#069	**N540**	Vihtavuori	Single-perforated Extruded	940 g/L	3,980 kJ/kg
#070	**Match Rifle**	Shooters World	Spherical / Ball	970 g/L	4,100 kJ/kg
#071	**748**	Winchester	Spherical / Ball	971 g/L	3,700 kJ/kg
#072	**The Creed**	Shooters World	Spherical / Ball	983 g/L	3,568 kJ/kg
#073	**StaBALL Match**	Winchester	Spherical / Ball	960 g/L	3,850 kJ/kg
#074	**BL-C(2)**	Hodgdon	Spherical / Ball	995 g/L	3,800 kJ/kg
#075	**Reloder TS 15.5**	Alliant	Single-perforated Extruded	890 g/L	3,650 kJ/kg
#076	**Leverevolution**	Hodgdon	Spherical / Ball	1045 g/L	4,000 kJ/kg
#077	**CFE 223**	Hodgdon	Spherical / Ball	980 g/L	3,800 kJ/kg
#078	**Long Rifle**	Shooters World	Single-perforated Extruded	910 g/L	3,600 kJ/kg
#079	**RS60**	Reload Swiss	Single-perforated Extruded	970 g/L	4,000 kJ/kg
#080	**H380**	Hodgdon	Spherical / Ball	940 g/L	4,000 kJ/kg
#081	**Power Pro 2000-MR**	Alliant	Spherical / Ball	950 g/L	4,000 kJ/kg
#082	**N550**	Vihtavuori	Single-perforated Extruded	950 g/L	3,990 kJ/kg

Rank	Powder	Maker	Grain Type	Est. Density	Est. Heat of Exp.
#083	**Big Game**	Ramshot	Spherical / Ball	980 g/L	4,000 kJ/kg
#084	**4007 SSC**	IMR	Single-perforated Extruded	932 g/L	3,580 kJ/kg
#085	**2700**	Accurate	Spherical / Ball	980 g/L	4,200 kJ/kg
#086	**H414**	Hodgdon	Spherical / Ball	980 g/L	4,100 kJ/kg
#087	**RS62**	Reload Swiss	Single-perforated Extruded	960 g/L	3,750 kJ/kg
#088	**Reloder 17**	Alliant	Single-perforated Extruded	970 g/L	4,000 kJ/kg
#089	**760**	Winchester	Spherical / Ball	971 g/L	4,050 kJ/kg
#090	**4451**	IMR	Single-perforated Extruded	960 g/L	3,580 kJ/kg
#091	**H4350**	Hodgdon	Single-perforated Extruded	990 g/L	3,590 kJ/kg
#092	**Hybrid 100V**	Hodgdon	Extruded (General)	890 g/L	3,620 kJ/kg
#093	**Reloder 16**	Alliant	Single-perforated Extruded	900 g/L	3,800 kJ/kg
#094	**4350**	IMR	Single-perforated Extruded	930 g/L	3,580 kJ/kg
#095	**URP**	Norma	Single-perforated Extruded	910 g/L	4,017 kJ/kg
#096	**4350**	Accurate	Single-perforated Extruded	955 g/L	3,590 kJ/kg
#097	**204**	Norma	Single-perforated Extruded	950 g/L	3,950 kJ/kg
#098	**RS70**	Reload Swiss	Single-perforated Extruded	990 g/L	3,900 kJ/kg
#099	**N160**	Vihtavuori	Single-perforated Extruded	920 g/L	3,560 kJ/kg
#100	**StaBALL 6.5**	Winchester	Spherical / Ball	990 g/L	3,820 kJ/kg
#101	**4831**	IMR	Single-perforated Extruded	930 g/L	3,575 kJ/kg
#102	**4955**	IMR	Single-perforated Extruded	992 g/L	3,560 kJ/kg
#103	**SW4350**	Shooters World	Single-perforated Extruded	920 g/L	3,580 kJ/kg
#104	**Hunter**	Ramshot	Spherical / Ball	940 g/L	3,800 kJ/kg
#105	**N555**	Vihtavuori	Single-perforated Extruded	900 g/L	3,700 kJ/kg
#106	**Power Pro 4000-MR**	Alliant	Spherical / Ball	980 g/L	4,100 kJ/kg
#107	**Reloder 19**	Alliant	Single-perforated Extruded	940 g/L	3,900 kJ/kg
#108	**3100**	Accurate	Single-perforated Extruded	920 g/L	3,600 kJ/kg
#109	**Reloder 23**	Alliant	Multi-perforated Extruded	920 g/L	3,800 kJ/kg
#110	**SUPERFORMANCE**	Hodgdon	Spherical / Ball	1020 g/L	4,300 kJ/kg
#111	**H4831**	Hodgdon	Single-perforated Extruded	930 g/L	3,570 kJ/kg
#112	**H4831SC**	Hodgdon	Single-perforated Extruded	992 g/L	3,570 kJ/kg
#113	**Reloder 22**	Alliant	Single-perforated Extruded	940 g/L	3,980 kJ/kg
#114	**7828SSC**	IMR	Single-perforated Extruded	960 g/L	3,900 kJ/kg
#115	**7828**	IMR	Single-perforated Extruded	992 g/L	3,550 kJ/kg
#116	**MRP**	Norma	Single-perforated Extruded	960 g/L	3,873 kJ/kg
#117	**N560**	Vihtavuori	Single-perforated Extruded	955 g/L	3,970 kJ/kg
#118	**N165**	Vihtavuori	Single-perforated Extruded	930 g/L	3,560 kJ/kg
#119	**RS76**	Reload Swiss	Single-perforated Extruded	990 g/L	3,850 kJ/kg
#120	**Supreme 780**	Winchester	Spherical / Ball	992 g/L	3,600 kJ/kg
#121	**Reloder 26**	Alliant	Multi-perforated Extruded	994 g/L	4,200 kJ/kg
#122	**7977**	IMR	Single-perforated Extruded	920 g/L	3,827 kJ/kg
#123	**RS80**	Reload Swiss	Single-perforated Extruded	1000 g/L	3,850 kJ/kg
#124	**N565**	Vihtavuori	Single-perforated Extruded	950 g/L	3,960 kJ/kg
#125	**Reloder 25**	Alliant	Single-perforated Extruded	915 g/L	3,990 kJ/kg
#126	**H1000**	Hodgdon	Single-perforated Extruded	920 g/L	3,441 kJ/kg
#127	**MagPro**	Accurate	Spherical / Ball	978 g/L	3,900 kJ/kg
#128	**N170**	Vihtavuori	Single-perforated Extruded	960 g/L	3,700 kJ/kg
#129	**Retumbo**	Hodgdon	Multi-perforated Extruded	960 g/L	3,444 kJ/kg
#130	**Grand**	Ramshot	Spherical / Ball	980 g/L	4,000 kJ/kg
#131	**217**	Norma	Single-perforated Extruded	920 g/L	3,766 kJ/kg
#132	**Magnum**	Ramshot	Spherical / Ball	995 g/L	4,000 kJ/kg

Rank	Powder	Maker	Grain Type	Est. Density	Est. Heat of Exp.
#133	**8133**	IMR	Single-perforated Extruded	960 g/L	3,703 kJ/kg
#134	**StaBALL HD**	Winchester	Spherical / Ball	980 g/L	3,800 kJ/kg
#135	**N570**	Vihtavuori	Single-perforated Extruded	970 g/L	3,930 kJ/kg
#136	**N568**	Vihtavuori	Single-perforated Extruded	960 g/L	3,850 kJ/kg
#137	**24N41**	Vihtavuori	Single-perforated Extruded	970 g/L	3,700 kJ/kg
#138	**Reloder 33**	Alliant	Single-perforated Extruded	920 g/L	3,900 kJ/kg
#139	**Reloder 50**	Alliant	Single-perforated Extruded	890 g/L	3,800 kJ/kg
#140	**H50BMG**	Hodgdon	Single-perforated Extruded	980 g/L	3,205 kJ/kg
#141	**LRT**	Ramshot	Spherical / Ball	980 g/L	3,605 kJ/kg
#142	**US 869**	Hodgdon	Spherical / Ball	970 g/L	4,200 kJ/kg
#143	**20N29**	Vihtavuori	Single-perforated Extruded	960 g/L	3,600 kJ/kg

Part IX

Cartridge Dimensions and Pressure Standards

Case is the maximum case length. Trim is the trim length. OAL is the maximum cartridge overall length. Face is the cartridge face diameter. Case, Trim, OAL and Face are in inches. Cap. is the case capacity in grains of water. LR means large rifle and SR means small rifle. Mag means most published tests used a magnum primer. MAP/Pmax is the SAAMI maximum average pressure in psi or the C.I.P. maximum pressure in bar. Data p. is the first page of its tables in Part X.

Cartridge	Cal.	Case	Trim	OAL	Face	Cap.	Primer	MAP/Pmax	Data p.
.218 Bee	.224	1.345	1.335	1.680	0.408	17.8	SR	**35,000 psi**	209
.219 Zipper	.224	1.938	1.928	2.260	0.506	33.2	LR	**2,850 bar**	212
22 ARC	.224	1.525	1.515	2.260	0.441	34.6	SR	**52,000 psi**	214
.22 BR Remington	.224	1.540	1.530	2.080	0.473	35.9	SR	**60,000 psi**	218
22 Creedmoor	.224	1.920	1.910	2.700	0.473	49.5	LR	**62,000 psi**	223
.22 Hornet	.224	1.403	1.393	1.723	0.350	14.8	SR	**49,000 psi**	227
22 Nosler	.224	1.760	1.750	2.260	0.378	36.6	SR	**55,000 psi**	229
.22 PPC USA	.224	1.515	1.505	2.193	0.445	32.3	SR	**4,050 bar**	235
.22-250 Remington	.224	1.912	1.902	2.350	0.473	43.8	LR	**65,000 psi**	237
.220 Swift	.224	2.205	2.195	2.680	0.473	47.0	LR	**62,000 psi**	243
.222 Remington	.224	1.700	1.690	2.130	0.378	27.2	SR	**50,000 psi**	248
.222 Remington Magnum	.224	1.850	1.840	2.280	0.378	30.8	SR	**55,000 psi**	251
.223 Remington	.224	1.760	1.750	2.260	0.378	29.3	SR	**55,000 psi**	254
.223 WSSM	.224	1.670	1.660	2.360	0.535	55.6	LR	**65,000 psi**	259
.224 Valkyrie	.224	1.600	1.590	2.260	0.422	31.2	SR	**55,000 psi**	264
.224 Weatherby Magnum	.224	1.923	1.913	2.330	0.430	38.3	LR	**4,400 bar**	268
.225 Winchester	.224	1.930	1.920	2.500	0.473	40.3	LR	**3,900 bar**	271
5.56x45mm NATO	.224	1.760	1.750	2.260	0.378	27.6	SR	**55,000 psi**	274
24 Nosler	.243	1.600	1.590	2.260	0.378	31.0	SR	**55,000 psi**	277
.240 Weatherby Magnum	.243	2.500	2.490	3.100	0.472	63.1	LR Mag	**4,400 bar**	280
.243 Winchester	.243	2.045	2.035	2.710	0.473	54.1	LR	**60,000 psi**	285
.243 WSSM	.243	1.670	1.660	2.360	0.531	53.0	LR	**65,000 psi**	291
6 GT	.243	1.725	1.705	2.640	0.473	44.0	SR	**62,000 psi**	298
6mm ARC	.243	1.490	1.480	2.260	0.441	34.6	SR	**52,000 psi**	304
6mm BR	.243	1.560	1.550	2.200	0.473	37.3	SR	**4,050 bar**	309
6mm Creedmoor	.243	1.920	1.910	2.800	0.473	51.0	LR	**62,000 psi**	315
6mm Dasher	.243	1.545	1.535	2.362	0.473	41.1	SR	**4,400 bar**	321
6mm PPC	.243	1.515	1.505	2.193	0.445	32.0	SR	**4,050 bar**	325
6mm Remington	.243	2.233	2.223	2.825	0.473	55.0	LR	**65,000 psi**	330
6mm XC	.243	1.902	1.892	2.756	0.470	49.0	LR	**4,400 bar**	336
6mm-284	.243	2.170	2.160	2.800	0.473	66.0	LR	**56,000 psi**	341
6x45 (6mm-223)	.243	1.760	1.750	2.250	0.378	30.1	SR	**55,000 psi**	347
6x47 Lapua	.243	1.850	1.840	2.400	0.473	47.1	SR	**60,000 psi**	353
25 Creedmoor	.257	1.920	1.910	2.825	0.473	52.5	LR	**62,000 psi**	358
.25 WSSM	.257	1.670	1.660	2.360	0.535	52.9	LR	**65,000 psi**	361
.25-06 Remington	.257	2.494	2.484	3.250	0.473	65.0	LR	**63,000 psi**	363
.25-20 Winchester	.257	1.330	1.320	1.592	0.408	19.3	SR	**2,700 bar**	366
.250 Savage	.257	1.912	1.902	2.515	0.473	45.7	LR	**3,650 bar**	367
.256 Winchester Magnum	.257	1.281	1.271	1.590	0.440	21.1	SR	**3,500 bar**	370
.257 Roberts	.257	2.233	2.223	2.780	0.473	56.0	LR	**54,000 psi**	372
.257 Weatherby Magnum	.257	2.549	2.539	3.209	0.531	86.0	LR Mag	**62,500 psi**	375

Cartridge	Cal.	Case	Trim	OAL	Face	Cap.	Primer	MAP/Pmax	Data p.
26 Nosler	.264	2.590	2.580	3.340	0.534	98.6	LR Mag	**65,000 psi**	378
.260 Remington	.264	2.035	2.025	2.800	0.473	53.5	LR	**60,000 psi**	381
.264 Winchester Magnum	.264	2.500	2.490	3.340	0.532	82.7	LR Mag	**64,000 psi**	384
6.5 Creedmoor	.264	1.920	1.910	2.825	0.473	52.5	LR	**62,000 psi**	388
6.5 Grendel	.264	1.520	1.510	2.260	0.441	35.0	SR	**52,000 psi**	391
6.5 PRC	.264	2.030	2.020	2.955	0.532	67.7	LR Mag	**65,000 psi**	394
6.5-284 Norma	.264	2.170	2.160	3.228	0.473	64.9	LR	**58,000 psi**	396
6.5-300 Weatherby Magnum	.264	2.825	2.815	3.600	0.531	97.5	LR Mag	**65,000 psi**	399
6.5mm BR Remington	.264	1.540	1.530	2.250	0.473	38.6	SR	**60,000 psi**	400
6.5mm Carcano	.264	2.067	2.057	3.012	0.451	48.7	LR	**2,850 bar**	403
6.5mm Remington Magnum	.264	2.170	2.160	2.800	0.532	68.2	LR Mag	**4,350 bar**	406
6.5mm-06	.264	2.480	2.470	3.310	0.473	66.6	LR	**65,000 psi**	408
6.5x47 Lapua	.264	1.850	1.840	2.795	0.473	48.0	SR	**4,350 bar**	411
6.5x50 Japanese	.264	2.008	1.998	2.992	0.476	44.8	LR	**2,950 bar**	414
6.5x55 Swedish	.264	2.165	2.155	2.955	0.480	57.1	LR	**51,000 psi**	417
6.5x57 Mauser	.264	2.232	2.222	3.228	0.470	59.1	LR	**3,900 bar**	420
.270 Weatherby Magnum	.277	2.549	2.539	3.295	0.531	86.0	LR Mag	**62,500 psi**	423
.270 Winchester	.277	2.540	2.530	3.340	0.473	67.0	LR	**65,000 psi**	426
.270 WSM	.277	2.100	2.090	2.860	0.535	76.6	LR Mag	**65,000 psi**	429
6.8 Western	.277	2.020	2.010	2.955	0.535	73.5	LR Mag	**65,000 psi**	431
6.8mm Remington SPC	.277	1.686	1.676	2.260	0.422	35.5	SR	**55,000 psi**	433
28 Nosler	.284	2.590	2.580	3.340	0.534	99.3	LR Mag	**65,000 psi**	436
.280 Ackley Improved	.284	2.525	2.515	3.330	0.473	71.7	LR	**65,000 psi**	441
.280 Remington	.284	2.540	2.530	3.330	0.473	68.7	LR	**60,000 psi**	444
.284 Winchester	.284	2.170	2.160	2.800	0.473	65.8	LR	**56,000 psi**	448
7-30 Waters	.284	2.040	2.030	2.700	0.506	44.0	LR	**45,000 psi**	451
7mm BR Remington	.284	1.520	1.510	2.143	0.473	36.5	SR	**4,050 bar**	455
7mm PRC	.284	2.280	2.270	3.340	0.532	81.8	LR Mag	**65,000 psi**	459
7mm Remington Magnum	.284	2.500	2.490	3.290	0.532	83.6	LR Mag	**61,000 psi**	462
7mm Remington SAUM	.284	2.035	2.025	2.825	0.534	73.6	LR Mag	**65,000 psi**	467
7mm RUM	.284	2.850	2.840	3.600	0.534	112.6	LR Mag	**65,000 psi**	471
7mm STW	.284	2.850	2.840	3.600	0.532	97.4	LR Mag	**65,000 psi**	475
7mm Weatherby Magnum	.284	2.549	2.539	3.360	0.531	86.8	LR Mag	**65,000 psi**	479
7mm WSM	.284	2.100	2.090	2.860	0.535	81.0	LR Mag	**65,000 psi**	483
7mm-08 Remington	.284	2.035	2.025	2.800	0.473	54.9	LR	**61,000 psi**	487
7x57 Mauser	.284	2.235	2.225	3.065	0.476	59.6	LR	**51,000 psi**	491
7x64 Brenneke	.284	2.520	2.510	3.307	0.470	69.0	LR	**55,000 psi**	495
7x65R	.284	2.559	2.549	3.291	0.524	67.9	LR	**3,800 bar**	498
.30 AR Remington	.308	1.530	1.520	2.260	0.492	44.5	SR	**55,000 psi**	500
.30 BR Remington	.308	1.512	1.502	2.283	0.473	42.0	SR	**4,050 bar**	502
30 Nosler	.308	2.556	2.546	3.340	0.534	97.4	LR Mag	**65,000 psi**	505
.30 TC	.308	1.920	1.910	2.660	0.473	54.3	LR	**62,000 psi**	509
.30-06 Springfield	.308	2.494	2.484	3.340	0.473	68.1	LR	**60,000 psi**	512
.30-06 Springfield Ackley Improved	.308	2.494	2.484	3.340	0.473	70.8	LR	**4,300 bar**	517
.30-30 Winchester	.308	2.039	2.029	2.550	0.506	45.0	LR	**42,000 psi**	521
.30-378 Weatherby Magnum	.308	2.913	2.903	3.750	0.579	128.3	LR Mag	**4,400 bar**	524
.30-40 Krag	.308	2.314	2.304	3.089	0.545	58.6	LR	**3,250 bar**	528
300 Blackout	.308	1.368	1.358	2.260	0.378	25.5	SR	**55,000 psi**	532
.300 H&H Magnum	.308	2.850	2.840	3.600	0.532	86.0	LR Mag	**58,000 psi**	536
.300 Norma Magnum	.308	2.492	2.482	3.681	0.588	103.8	LR Mag	**61,000 psi**	541

Cartridge	Cal.	Case	Trim	OAL	Face	Cap.	Primer	MAP/Pmax	Data p.
300 PRC	.308	2.580	2.570	3.700	0.532	94.7	LR Mag	**65,000 psi**	545
.300 Remington SAUM	.308	2.015	2.005	2.825	0.534	73.6	LR Mag	**65,000 psi**	549
.300 Remington Ultra Magnum	.308	2.850	2.840	3.600	0.534	115.7	LR Mag	**65,000 psi**	554
.300 Ruger Compact Magnum	.308	2.100	2.090	2.840	0.532	72.8	LR Mag	**65,000 psi**	559
.300 Savage	.308	1.871	1.861	2.600	0.473	52.8	LR	**47,000 psi**	563
.300 Weatherby Magnum	.308	2.825	2.815	3.560	0.531	98.0	LR Mag	**65,000 psi**	566
.300 Winchester Magnum	.308	2.620	2.610	3.340	0.532	93.5	LR Mag	**64,000 psi**	571
.300 WSM	.308	2.100	2.090	2.860	0.535	79.6	LR Mag	**65,000 psi**	576
.308 Marlin Express	.308	1.920	1.910	2.600	0.506	51.7	LR	**47,500 psi**	581
.308 Norma Magnum	.308	2.559	2.549	3.346	0.531	84.9	LR Mag	**4,400 bar**	584
.308 Winchester	.308	2.015	2.005	2.810	0.473	55.9	LR	**62,000 psi**	589
7.5x55 Swiss	.308	2.189	2.179	3.059	0.498	65.3	LR	**3,800 bar**	594
.325 WSM	.323	2.100	2.090	2.860	0.535	80.2	LR Mag	**65,000 psi**	597
8mm Remington Magnum	.323	2.850	2.840	3.780	0.532	98.3	LR Mag	**65,000 psi**	600
8mm-06	.323	2.494	2.484	3.350	0.473	69.4	LR	**60,000 psi**	603
8x57 IRS	.323	2.244	2.234	3.228	0.524	61.7	LR	**3,300 bar**	605
8x57 IS (8mm Mauser)	.323	2.240	2.230	3.250	0.470	64.0	LR	**35,000 psi**	607
33 Nosler	.338	2.460	2.450	3.340	0.534	92.9	LR Mag	**65,000 psi**	610
338 ARC	.338	1.300	1.290	2.260	0.441	33.2	SR	**52,000 psi**	614
.338 Federal	.338	2.015	2.005	2.820	0.473	55.5	LR	**62,000 psi**	616
.338 Lapua Magnum	.338	2.724	2.714	3.681	0.588	113.8	LR Mag	**65,000 psi**	619
.338 Norma Magnum	.338	2.492	2.482	3.681	0.588	105.6	LR Mag	**62,500 psi**	623
.338 Remington Ultra Magnum	.338	2.760	2.750	3.600	0.534	110.2	LR Mag	**65,000 psi**	626
.338 Ruger Compact Magnum	.338	2.015	2.005	2.840	0.532	69.2	LR Mag	**65,000 psi**	630
.338 Winchester Magnum	.338	2.500	2.490	3.340	0.532	85.9	LR Mag	**64,000 psi**	633
.338-06	.338	2.480	2.470	3.350	0.473	68.0	LR	**65,000 psi**	637
.338-378 Weatherby Magnum	.338	2.913	2.903	3.763	0.579	137.0	LR Mag	**4,400 bar**	640
.340 Weatherby Magnum	.338	2.825	2.815	3.700	0.531	102.0	LR Mag	**62,500 psi**	644
.35 Remington	.358	1.920	1.910	2.525	0.460	51.3	LR	**33,500 psi**	648
.35 Whelen	.358	2.494	2.484	3.340	0.473	72.1	LR	**62,000 psi**	650
.350 Remington Magnum	.358	2.170	2.160	2.800	0.532	72.2	LR	**4,300 bar**	652
.356 Winchester	.358	2.015	2.005	2.560	0.506	55.3	LR	**4,150 bar**	654
.358 Norma Magnum	.358	2.520	2.510	3.346	0.531	88.3	LR Mag	**4,400 bar**	656
.358 Winchester	.358	2.015	2.005	2.780	0.473	57.3	LR	**4,050 bar**	658
.375 Holland & Holland Magnum	.375	2.850	2.840	3.600	0.532	93.8	LR Mag	**62,000 psi**	660
.375 Remington Ultra Magnum	.375	2.850	2.840	3.600	0.534	117.4	LR Mag	**65,000 psi**	663
.375 Ruger	.375	2.580	2.570	3.340	0.532	99.3	LR Mag	**62,000 psi**	666
.375 Weatherby Magnum	.375	2.860	2.850	3.563	0.531	105.3	LR Mag	**4,400 bar**	669
.378 Weatherby Magnum	.375	2.913	2.903	3.655	0.579	133.3	LR Mag	**4,400 bar**	671
.460 Weatherby Magnum	.458	2.913	2.903	3.750	0.579	141.5	LR Mag	**4,400 bar**	673

Part X

Simulated Load Ladders

Every charge, velocity and pressure in the Part XII tables comes from a computer simulation. None of it was fired or measured. Each row is a prediction from Ignition, the internal ballistics engine in Empirical Precision.

The tables are printed for one purpose. Use them only to see how far the engine's predictions sit from tested data. They are not load data. Never load ammunition from them.

How the tables were made

- Each bullet is a generic bullet of the listed weight. It is not matched to any maker's bullet, even where a maker sells one of the same weight.
- Every load was simulated in a 25-inch barrel, at the COAL, bullet length and seating depth given on the line under each bullet weight.
- Each row gives the charge and velocity at five steps, from step 1 (90 percent of step 5) to step 5, the limit, with peak pressure in psi and case fill at step 5. Step 5 is where predicted pressure reaches the SAAMI limit (the C.I.P. limit, converted to psi, where SAAMI sets none) or the powder fills 105 percent of the usable case capacity, whichever comes first. Steps 2 to 4 are equal steps between step 1 and step 5.

What a simulation cannot know

- **Your rifle.** Chamber, throat, bore and barrel length all change pressure and velocity. A real barrel can run well above or below the prediction.
- **Your lots.** Powder burn rate changes from lot to lot. Case capacity changes with the maker and the lot.
- **Temperature.** No table accounts for the powder's temperature. A charge that is mild at 40 °F can be over pressure at 100 °F.
- **Seating.** Every load is simulated with the same jump to the lands. Seating closer to the lands, or into them, raises pressure.
- **Primers.** No table names a primer. A change of primer can change pressure.

How to read them

Set a row beside the powder maker's current data for the same cartridge, bullet weight and powder. The difference shows how close the engine comes, and where it drifts. Where the two disagree, the maker's data is right.

A row is never a start charge, a maximum, a stand-in for published data or a check on a load. Develop every load from the maker's current data for your exact components (see Chapters 16 and 30).

.218 Bee

Winchester developed the .218 Bee in the late 1930s as a varmint cartridge for its Model 65 lever-action rifle. That rifle succeeded the Model 53 and ultimately the Model 1892. The case is rimmed and bottlenecked. It comes from the .32-20 Winchester family and is necked down to hold .224-inch bullets. Some sources name the .32-20 itself as the parent. Others name the .25-20 Winchester instead. That case is itself a derivative of the .32-20. The Bee had a slight velocity advantage over the .22 Hornet. It was the Hornet's first real competitor in the small centerfire varmint class.

Factory and handloaded ammunition typically uses bullets of 35 to 50 grains. Lighter bullets reach a little over 3,000 fps. The cartridge is suited to small and medium-sized varmints out to about 200 yards. The later .222 and .223 Remington largely displaced it. Even so a few manufacturers still offer rifles and ammunition. The Bee also retains a following among handloaders and collectors of classic rifles.

Cartridge specifications	
Bullet Diameter	**0.224" (5.69 mm)**
Max Case Length	**1.345" (34.16 mm)**
Case Trim Length	**1.335" (33.91 mm)**
Max COAL	**1.680" (42.67 mm)**
Primer Pocket	**Small Rifle**
Standard Twist	**1:16"**
Case Capacity	**17.8 gr H_2O**
Max Pressure	**35,000 psi (SAAMI)**

35 gr Bullet · 25" barrel

COAL: 1.637" • Bullet length: 0.516" • Seat depth: 0.224" • Usable capacity: 16.1 / 18.3 gr H_2O

Powder	STEP 1 · 90%		STEP 2		STEP 3		STEP 4		STEP 5 · LIMIT			
	gr	fps	gr	fps	gr	fps	gr	fps	gr	fps	psi	Fill
Hodgdon CFE BLK	14.7	2,835	15.1	2,905	15.5	2,980	15.9	3,050	16.3	3,120	33,300	104%
Alliant 2400	10.8	2,830	11.1	2,900	11.4	2,960	11.7	3,025	12.0	3,090	34,700	82%
Shooters World SBR-SOCOM	12.2	2,745	12.5	2,810	12.9	2,890	13.3	2,965	13.6	3,025	34,800	87%
Alliant Power Pro 300-MP	11.1	2,725	11.4	2,790	11.7	2,855	12.0	2,920	12.3	2,980	34,600	85%
Accurate 1680	13.1	2,665	13.4	2,720	13.8	2,795	14.2	2,865	14.5	2,920	34,800	93%
IMR 4227	11.8	2,670	12.1	2,725	12.4	2,785	12.8	2,865	13.1	2,920	34,600	92%
Shooters World Blackout	12.2	2,635	12.5	2,695	12.8	2,750	13.2	2,825	13.5	2,880	34,900	86%
Hodgdon Lil'Gun	11.3	2,595	11.6	2,660	11.9	2,720	12.3	2,795	12.6	2,855	34,800	88%
Accurate 5744	12.4	2,580	12.8	2,655	13.1	2,710	13.5	2,790	13.8	2,845	34,600	100%
Vihtavuori N120	12.1	2,545	12.4	2,600	12.8	2,680	13.1	2,735	13.4	2,795	34,800	97%
Reload Swiss RS30	10.3	2,545	10.6	2,610	10.9	2,675	11.1	2,715	11.4	2,775	34,900	86%
Reload Swiss RS36	12.5	2,515	12.8	2,570	13.2	2,645	13.6	2,720	13.9	2,775	34,500	95%
Hodgdon H4227	10.3	2,530	10.6	2,595	10.9	2,660	11.1	2,700	11.4	2,765	34,900	81%

40 gr Bullet · 25" barrel

COAL: 1.615" • Bullet length: 0.564" • Seat depth: 0.294" • Usable capacity: 15.6 / 18.3 gr H_2O

Powder	STEP 1 · 90%		STEP 2		STEP 3		STEP 4		STEP 5 · LIMIT			
	gr	fps	gr	fps	gr	fps	gr	fps	gr	fps	psi	Fill
Hodgdon CFE BLK	14.2	2,725	14.6	2,795	15.0	2,860	15.4	2,930	15.8	3,000	34,400	105%
Alliant 2400	10.3	2,665	10.6	2,725	10.9	2,790	11.1	2,830	11.4	2,895	34,900	81%
Shooters World SBR-SOCOM	11.6	2,600	11.9	2,660	12.3	2,740	12.6	2,795	12.9	2,855	34,500	85%
Alliant Power Pro 300-MP	10.5	2,560	10.8	2,625	11.1	2,685	11.4	2,745	11.7	2,810	34,600	83%
Accurate 1680	12.4	2,510	12.8	2,580	13.1	2,635	13.5	2,705	13.8	2,755	34,500	91%
IMR 4227	11.2	2,520	11.5	2,575	11.8	2,635	12.1	2,690	12.4	2,750	34,500	90%
Accurate 5744	11.9	2,475	12.2	2,530	12.6	2,605	12.9	2,660	13.2	2,715	34,800	99%
Shooters World Blackout	11.5	2,465	11.8	2,525	12.2	2,600	12.5	2,655	12.8	2,710	34,600	84%
Hodgdon Lil'Gun	10.7	2,450	11.0	2,515	11.3	2,575	11.6	2,635	11.9	2,690	34,700	86%
Reload Swiss RS36	12.0	2,425	12.3	2,480	12.7	2,555	13.0	2,610	13.3	2,665	34,800	94%
Vihtavuori N120	11.4	2,395	11.7	2,455	12.1	2,530	12.4	2,585	12.7	2,640	34,500	95%
Reload Swiss RS30	9.7	2,375	10.0	2,440	10.3	2,500	10.5	2,540	10.8	2,600	35,000	85%
Hodgdon H4198	12.3	2,340	12.7	2,415	13.0	2,470	13.3	2,525	13.7	2,595	34,700	101%
Alliant Reloder 7	12.9	2,345	13.3	2,415	13.6	2,465	14.0	2,535	14.3	2,585	34,700	98%
Accurate LT-30	12.5	2,275	12.8	2,330	13.2	2,400	13.6	2,470	13.9	2,520	34,500	90%

45 gr Bullet · 25" barrel

COAL: 1.610" • Bullet length: 0.540" • Seat depth: 0.275" • Usable capacity: 15.7 / 18.3 gr H_2O

Powder	STEP 1 · 90%		STEP 2		STEP 3		STEP 4		STEP 5 · LIMIT			
	gr	fps	gr	fps	gr	fps	gr	fps	gr	fps	psi	Fill
Hodgdon CFE BLK	14.0	2,625	14.4	2,690	14.8	2,760	15.2	2,825	15.6	2,890	34,800	102%
Shooters World SBR-SOCOM	11.3	2,475	11.6	2,535	11.9	2,595	12.3	2,670	12.6	2,725	34,700	83%
Alliant Power Pro 300-MP	10.3	2,440	10.6	2,505	10.9	2,565	11.1	2,605	11.4	2,665	34,700	81%
Accurate 1680	12.2	2,405	12.5	2,460	12.8	2,510	13.2	2,580	13.5	2,630	34,500	89%
IMR 4227	10.9	2,390	11.2	2,445	11.5	2,500	11.8	2,555	12.1	2,610	34,900	88%
Accurate 5744	11.6	2,370	11.9	2,425	12.3	2,495	12.6	2,550	12.9	2,605	34,800	96%
Shooters World Blackout	11.3	2,355	11.6	2,410	11.9	2,470	12.2	2,525	12.5	2,575	34,800	81%
Reload Swiss RS36	11.7	2,335	12.0	2,390	12.3	2,445	12.7	2,515	13.0	2,570	34,900	91%
Hodgdon Lil'Gun	10.4	2,335	10.7	2,395	10.9	2,435	11.2	2,490	11.5	2,550	34,800	82%
Vihtavuori N120	11.3	2,325	11.6	2,380	11.9	2,435	12.2	2,485	12.5	2,540	35,000	93%
Alliant Reloder 7	12.6	2,275	12.9	2,325	13.3	2,390	13.7	2,460	14.0	2,510	34,800	95%
Hodgdon H4198	12.1	2,275	12.4	2,330	12.8	2,400	13.1	2,455	13.4	2,505	34,600	98%
Vihtavuori N130	12.9	2,260	13.3	2,330	13.6	2,380	14.0	2,445	14.3	2,495	33,300	105%
Shooters World The Patriot	14.1	2,240	14.5	2,305	14.9	2,365	15.3	2,430	15.7	2,490	34,800	104%
Accurate LT-30	12.3	2,210	12.7	2,280	13.0	2,330	13.3	2,380	13.7	2,450	34,900	88%
Shooters World AR Plus	14.0	2,180	14.4	2,245	14.8	2,310	15.2	2,370	15.6	2,435	34,900	101%
Reload Swiss RS30	9.4	2,230	9.7	2,295	9.9	2,335	10.2	2,395	10.4	2,430	34,600	81%

50 gr Bullet · 25" barrel

COAL: 1.680" • Bullet length: 0.670" • Seat depth: 0.335" • Usable capacity: 15.2 / 18.3 gr H_2O

Powder	STEP 1 · 90%		STEP 2		STEP 3		STEP 4		STEP 5 · LIMIT			
	gr	fps	gr	fps	gr	fps	gr	fps	gr	fps	psi	Fill
Hodgdon CFE BLK	13.5	2,505	13.9	2,570	14.3	2,635	14.6	2,685	15.0	2,750	34,700	101%
Shooters World SBR-SOCOM	10.9	2,365	11.2	2,425	11.5	2,480	11.8	2,535	12.1	2,590	34,800	82%
Accurate 1680	11.7	2,280	12.0	2,335	12.3	2,385	12.7	2,450	13.0	2,500	34,700	88%
Vihtavuori N130	12.5	2,200	12.8	2,250	13.2	2,315	13.6	2,380	13.9	2,430	34,200	105%
Alliant Reloder 7	12.1	2,190	12.4	2,240	12.8	2,305	13.1	2,355	13.4	2,405	34,600	93%
Hodgdon H4198	11.6	2,180	11.9	2,235	12.3	2,300	12.6	2,355	12.9	2,405	34,800	97%
Alliant Power Pro 1200-R	13.2	2,160	13.6	2,225	13.9	2,275	14.3	2,335	14.7	2,400	35,000	98%
Vihtavuori N120	10.7	2,185	11.0	2,240	11.3	2,295	11.6	2,345	11.9	2,400	34,500	91%
Shooters World The Patriot	13.6	2,170	14.0	2,230	14.3	2,275	14.7	2,335	15.1	2,395	34,800	103%
Accurate 2200	12.7	2,140	13.0	2,190	13.4	2,255	13.8	2,315	14.1	2,365	34,400	105%
Shooters World AR Plus	13.5	2,115	13.9	2,175	14.3	2,240	14.6	2,285	15.0	2,350	34,700	100%
Reload Swiss RS40	13.3	2,110	13.7	2,170	14.1	2,235	14.4	2,280	14.8	2,345	34,500	103%
Accurate LT-30	11.8	2,115	12.1	2,165	12.4	2,215	12.8	2,285	13.1	2,335	34,600	87%
Accurate LT-32	12.5	2,100	12.8	2,145	13.2	2,210	13.6	2,275	13.9	2,325	35,000	101%
Accurate 2015	13.0	2,060	13.3	2,110	13.7	2,170	14.1	2,235	14.4	2,280	34,900	98%

55 gr Bullet · 25" barrel

COAL: 1.680" • Bullet length: 0.694" • Seat depth: 0.358" • Usable capacity: 15.0 / 18.3 gr H_2O

Powder	STEP 1 · 90%		STEP 2		STEP 3		STEP 4		STEP 5 · LIMIT			
	gr	fps	gr	fps	gr	fps	gr	fps	gr	fps	psi	Fill
Hodgdon CFE BLK	13.1	2,385	13.5	2,445	13.8	2,495	14.2	2,560	14.6	2,625	34,900	100%
Shooters World SBR-SOCOM	10.4	2,215	10.7	2,270	11.0	2,330	11.3	2,385	11.6	2,440	34,400	80%
Accurate 1680	11.3	2,150	11.6	2,205	11.9	2,255	12.3	2,320	12.6	2,370	34,800	86%
Vihtavuori N130	12.2	2,125	12.5	2,175	12.8	2,225	13.2	2,290	13.5	2,335	34,500	103%
Alliant Power Pro 1200-R	12.8	2,085	13.2	2,150	13.5	2,195	13.8	2,240	14.2	2,305	34,700	96%
Alliant Reloder 7	11.7	2,090	12.0	2,140	12.3	2,190	12.7	2,255	13.0	2,305	34,900	92%
Hodgdon H4198	11.3	2,090	11.6	2,145	11.9	2,195	12.2	2,245	12.5	2,295	34,900	96%
Shooters World The Patriot	13.1	2,065	13.5	2,125	13.8	2,175	14.2	2,235	14.6	2,295	34,600	101%
Norma 200	12.5	2,065	12.8	2,115	13.2	2,180	13.6	2,245	13.9	2,290	34,500	100%
Accurate 2200	12.4	2,060	12.8	2,125	13.1	2,175	13.5	2,235	13.8	2,285	35,000	104%
Shooters World AR Plus	13.1	2,040	13.5	2,100	13.8	2,145	14.2	2,205	14.6	2,270	34,800	98%
Vihtavuori N120	10.4	2,075	10.7	2,130	10.9	2,165	11.2	2,220	11.5	2,270	34,600	89%
Reload Swiss RS40	13.0	2,045	13.3	2,090	13.7	2,155	14.1	2,215	14.4	2,265	34,700	102%
Accurate LT-30	11.4	2,010	11.7	2,060	12.1	2,125	12.4	2,175	12.7	2,225	34,600	85%
Accurate LT-32	12.1	2,005	12.4	2,050	12.8	2,115	13.1	2,165	13.4	2,210	34,500	98%
Hodgdon H4895	13.6	1,990	14.0	2,045	14.3	2,090	14.7	2,150	15.1	2,210	34,500	104%
Alliant Reloder 10x	12.1	1,995	12.4	2,045	12.8	2,110	13.1	2,155	13.4	2,205	34,800	101%
Accurate 2015	12.6	1,975	12.9	2,020	13.3	2,085	13.7	2,145	14.0	2,195	34,900	97%
Hodgdon H322	12.6	1,970	12.9	2,015	13.3	2,080	13.7	2,140	14.0	2,185	34,900	99%
Hodgdon H335	13.4	1,915	13.8	1,975	14.2	2,030	14.5	2,075	14.9	2,135	34,600	98%

.219 Zipper

Winchester introduced the .219 Zipper in 1937 as a high-velocity varmint cartridge for its Model 64 lever-action rifle. The case was formed by necking down the rimmed .25-35 Winchester to accept .224-inch bullets. The .25-35 is a member of the .30-30 Winchester family. The cartridge was designed for tubular magazines. For that reason factory ammunition used flat- or round-nose bullets that limited its long-range performance.

Factory loads drove bullets of about 46 to 56 grains at roughly 3,100 to 3,200 fps. Marlin also chambered the cartridge in its Model 336 lever action until 1961. Some shooters built single-shot and bolt-action rifles for it to take advantage of pointed bullets. Winchester stopped producing ammunition in 1962 and Remington followed shortly afterward. The cartridge is now considered obsolete. Handloaders still keep existing rifles in service. The Zipper case served as the basis for the .219 Donaldson Wasp and the .219 Zipper Improved.

Cartridge specifications	
Bullet Diameter	**0.224" (5.69 mm)**
Max Case Length	**1.938" (49.22 mm)**
Case Trim Length	**1.928" (48.97 mm)**
Max COAL	**2.260" (57.40 mm)**
Primer Pocket	**Large Rifle**
Standard Twist	**1:16"**
Case Capacity	**33.2 gr H_2O**
Max Pressure	**2,850 bar / 41,336 psi (C.I.P.)**

45 gr Bullet · 25" barrel

COAL: 2.255" • Bullet length: 0.543" • Seat depth: 0.226" • Usable capacity: 30.9 / 33.2 gr H_2O

Powder	STEP 1 · 90%		STEP 2		STEP 3		STEP 4		STEP 5 · LIMIT			
	gr	fps	gr	fps	gr	fps	gr	fps	gr	fps	psi	Fill
Hodgdon CFE BLK	22.1	3,300	22.7	3,370	23.3	3,440	23.9	3,505	24.5	3,575	41,100	82%
Vihtavuori N540	27.4	3,245	28.1	3,320	28.9	3,400	29.6	3,470	30.4	3,555	41,300	104%
Alliant AR-Comp	24.2	3,235	24.9	3,310	25.5	3,375	26.2	3,450	26.9	3,520	41,000	93%
Accurate 2520	26.4	3,185	27.1	3,255	27.9	3,340	28.6	3,410	29.3	3,485	41,200	97%
Vihtavuori N135	24.6	3,200	25.3	3,275	26.0	3,345	26.6	3,410	27.3	3,480	41,300	96%
Hodgdon Leverevolution	27.1	3,165	27.9	3,250	28.6	3,320	29.4	3,405	30.1	3,475	41,200	93%
Accurate 2460	25.0	3,175	25.7	3,245	26.4	3,320	27.1	3,390	27.8	3,460	41,300	90%
Accurate 2230	24.4	3,160	25.1	3,235	25.8	3,305	26.4	3,365	27.1	3,435	41,200	89%
IMR 4895	25.6	3,110	26.3	3,185	27.0	3,255	27.7	3,330	28.4	3,405	41,100	95%
Vihtavuori N133	23.2	3,130	23.9	3,205	24.5	3,270	25.1	3,330	25.8	3,405	41,000	96%
Hodgdon CFE 223	26.7	3,070	27.4	3,145	28.2	3,230	28.9	3,300	29.7	3,385	41,300	98%
IMR 8208 XBR	24.4	3,090	25.1	3,165	25.8	3,240	26.4	3,305	27.1	3,380	41,300	95%
Winchester 748	25.6	3,055	26.3	3,130	27.0	3,205	27.7	3,280	28.4	3,355	41,100	94%
Alliant Power Pro Varmint	24.7	3,065	25.4	3,140	26.0	3,205	26.7	3,275	27.4	3,350	41,200	94%
IMR 4064	25.6	3,050	26.3	3,125	27.0	3,195	27.7	3,270	28.4	3,345	41,100	98%
Shooters World Match Rifle	25.2	3,045	25.9	3,120	26.6	3,195	27.3	3,265	28.0	3,340	41,200	93%
Accurate 2015	22.7	3,050	23.3	3,120	23.9	3,185	24.6	3,265	25.2	3,330	41,200	85%
IMR 3031	23.4	3,040	24.0	3,110	24.7	3,185	25.4	3,265	26.0	3,330	41,300	90%
Winchester StaBALL Match	25.7	3,030	26.4	3,105	27.1	3,180	27.8	3,250	28.5	3,325	41,000	103%
IMR 4198	20.0	3,050	20.6	3,120	21.1	3,175	21.6	3,235	22.2	3,300	41,200	86%

50 gr Bullet · 25" barrel

COAL: 2.260" • Bullet length: 0.651" • Seat depth: 0.329" • Usable capacity: 30.3 / 33.2 gr H_2O

Powder	STEP 1 · 90%		STEP 2		STEP 3		STEP 4		STEP 5 · LIMIT			
	gr	fps	gr	fps	gr	fps	gr	fps	gr	fps	psi	Fill
Vihtavuori N540	26.5	3,140	27.2	3,210	27.9	3,280	28.7	3,360	29.4	3,430	41,200	103%
Hodgdon CFE BLK	21.3	3,140	21.9	3,210	22.5	3,275	23.1	3,345	23.7	3,410	41,200	80%
Alliant AR-Comp	23.4	3,105	24.0	3,170	24.7	3,240	25.4	3,315	26.0	3,375	41,100	92%
Hodgdon Leverevolution	26.4	3,075	27.1	3,145	27.9	3,230	28.6	3,300	29.3	3,375	41,300	92%
Accurate 2520	25.7	3,085	26.4	3,155	27.1	3,230	27.8	3,300	28.5	3,370	41,300	97%
Vihtavuori N135	23.7	3,075	24.4	3,145	25.0	3,205	25.6	3,265	26.3	3,340	41,100	94%
Norma 202	24.7	3,055	25.4	3,125	26.0	3,185	26.7	3,260	27.4	3,330	41,100	98%
IMR 4895	24.8	3,015	25.5	3,085	26.1	3,150	26.8	3,220	27.5	3,295	41,100	94%
Vihtavuori N140	25.4	2,995	26.1	3,070	26.8	3,140	27.5	3,215	28.2	3,285	41,200	95%
IMR 8208 XBR	23.5	2,980	24.1	3,045	24.8	3,120	25.5	3,190	26.1	3,255	41,100	93%
Alliant Power Pro Varmint	23.9	2,960	24.6	3,035	25.3	3,105	25.9	3,170	26.6	3,240	41,200	93%
Hodgdon BL-C(2)	25.4	2,950	26.1	3,020	26.8	3,095	27.5	3,170	28.2	3,240	41,200	93%
IMR 4064	24.7	2,965	25.4	3,035	26.0	3,095	26.7	3,165	27.4	3,240	41,000	97%
Winchester StaBALL Match	25.0	2,945	25.7	3,015	26.4	3,090	27.1	3,160	27.8	3,235	41,300	103%
IMR 3031	22.7	2,950	23.3	3,015	23.9	3,080	24.6	3,155	25.2	3,220	41,300	89%
Reload Swiss RS50	25.7	2,930	26.4	3,000	27.1	3,070	27.8	3,140	28.5	3,210	41,200	99%
IMR 4166	23.9	2,925	24.5	2,985	25.2	3,060	25.9	3,135	26.5	3,200	41,200	97%
Hodgdon H380	26.6	2,850	27.4	2,930	28.1	2,995	28.9	3,075	29.6	3,150	41,000	104%
IMR 4198	19.2	2,910	19.7	2,965	20.3	3,035	20.8	3,090	21.3	3,145	41,000	85%
IMR 4320	24.4	2,860	25.1	2,935	25.8	3,010	26.4	3,075	27.1	3,145	41,200	90%

55 gr Bullet · 25" barrel

COAL: 2.260" • Bullet length: 0.722" • Seat depth: 0.400" • Usable capacity: 29.6 / 33.2 gr H_2O

Powder	STEP 1 · 90%		STEP 2		STEP 3		STEP 4		STEP 5 · LIMIT			
	gr	fps	gr	fps	gr	fps	gr	fps	gr	fps	psi	Fill
Vihtavuori N540	25.5	3,010	26.2	3,080	26.9	3,150	27.6	3,215	28.3	3,285	41,200	102%
Hodgdon Leverevolution	25.5	2,960	26.2	3,030	26.9	3,100	27.6	3,170	28.3	3,240	41,100	91%
Accurate 2520	24.8	2,960	25.5	3,030	26.1	3,090	26.8	3,155	27.5	3,225	41,200	96%
Alliant AR-Comp	22.5	2,960	23.1	3,020	23.8	3,090	24.4	3,155	25.0	3,215	41,300	91%
Alliant Reloder 15	24.8	2,920	25.5	2,990	26.1	3,050	26.8	3,120	27.5	3,190	41,100	99%
Norma 202	23.8	2,930	24.4	2,990	25.1	3,060	25.8	3,130	26.4	3,190	41,300	97%
Vihtavuori N135	22.8	2,935	23.4	2,995	24.1	3,065	24.7	3,125	25.3	3,185	41,300	93%
IMR 4895	23.9	2,895	24.5	2,955	25.2	3,030	25.9	3,100	26.5	3,160	41,000	93%
Vihtavuori N140	24.5	2,890	25.2	2,960	25.9	3,030	26.5	3,090	27.2	3,160	41,200	94%
Accurate 2460	23.0	2,890	23.6	2,955	24.3	3,020	25.0	3,090	25.6	3,150	41,000	87%
Reload Swiss RS52	24.3	2,850	25.0	2,925	25.6	2,985	26.3	3,055	27.0	3,130	41,200	96%
Vihtavuori N150	24.5	2,855	25.2	2,925	25.9	2,995	26.5	3,060	27.2	3,130	41,000	103%
Winchester 748	24.0	2,855	24.7	2,925	25.4	3,000	26.0	3,060	26.7	3,130	41,100	93%
IMR 8208 XBR	22.6	2,860	23.2	2,920	23.9	2,995	24.5	3,055	25.1	3,115	41,100	92%
IMR 4064	23.7	2,850	24.4	2,920	25.0	2,980	25.6	3,040	26.3	3,110	41,000	95%
Winchester StaBALL Match	24.2	2,835	24.9	2,905	25.5	2,965	26.2	3,040	26.9	3,110	41,200	102%
Accurate 4064	24.1	2,815	24.8	2,885	25.5	2,955	26.1	3,020	26.8	3,090	41,300	101%
IMR 3031	21.9	2,830	22.5	2,895	23.1	2,960	23.7	3,025	24.3	3,085	41,300	88%
Hodgdon H380	25.8	2,770	26.5	2,835	27.3	2,915	28.0	2,985	28.7	3,055	41,200	103%
IMR 4320	23.6	2,760	24.3	2,830	24.9	2,895	25.6	2,965	26.2	3,030	41,000	89%

22 ARC

Hornady announced the 22 ARC (Advanced Rifle Cartridge) in October 2023. Production ammunition followed in 2024. Like the earlier 6mm ARC it is based on the 6.5 Grendel case. In this instance the case is necked down to accept .224-inch bullets. The design goal was to approach .22-250 Remington performance from an AR-15-style rifle. Long high-ballistic-coefficient bullets also had to stay within magazine length. The cartridge shares the Grendel's larger case head. It therefore requires a matching bolt and magazines rather than standard .223 Remington components. The cartridge is standardized by SAAMI.

Hornady's factory loads span 62 to 88 grains. The 62-grain load is rated at 3,300 fps and the 88-grain ELD Match at 2,820 fps. Loads of 70, 75 and 80 grains fall between them. Fast-twist barrels are needed to stabilize the heavier bullets. Shooters use the cartridge for varmint and predator hunting, long-range target shooting and gas-gun precision competition. It is offered in AR-15 uppers and complete rifles as well as in bolt-action rifles.

Cartridge specifications	
Bullet Diameter	**0.224" (5.69 mm)**
Max Case Length	**1.525" (38.73 mm)**
Case Trim Length	**1.515" (38.48 mm)**
Max COAL	**2.260" (57.40 mm)**
Primer Pocket	**Small Rifle**
Standard Twist	**1:7"**
Case Capacity	**34.6 gr H_2O**
Max Pressure	**52,000 psi (SAAMI)**

40 gr Bullet · 25" barrel

COAL: 1.922" • Bullet length: 0.621" • Seat depth: 0.224" • Usable capacity: 32.5 / 34.6 gr H_2O

Powder	STEP 1 · 90%		STEP 2		STEP 3		STEP 4		STEP 5 · LIMIT			
	gr	fps	gr	fps	gr	fps	gr	fps	gr	fps	psi	Fill
Hodgdon CFE BLK	25.5	3,765	26.2	3,845	26.9	3,925	27.6	4,000	28.3	4,080	51,600	90%
Alliant AR-Comp	28.0	3,685	28.8	3,770	29.6	3,855	30.3	3,930	31.1	4,020	51,800	103%
Ramshot X-Terminator	29.0	3,690	29.8	3,770	30.6	3,850	31.4	3,935	32.2	4,020	51,700	100%
Accurate 2460	29.5	3,670	30.3	3,750	31.1	3,835	32.0	3,930	32.8	4,015	51,600	101%
Vihtavuori N135	28.3	3,620	29.1	3,705	29.9	3,790	30.6	3,865	31.4	3,950	50,800	105%
Hodgdon H4895	28.7	3,590	29.5	3,675	30.3	3,765	31.1	3,850	31.9	3,940	51,800	102%
Accurate 2230	28.4	3,615	29.2	3,695	29.9	3,765	30.7	3,850	31.5	3,930	51,900	98%
Vihtavuori N530	28.4	3,585	29.2	3,675	29.9	3,755	30.7	3,840	31.5	3,930	51,700	104%
Vihtavuori N130	25.2	3,610	25.9	3,685	26.6	3,765	27.3	3,845	28.0	3,925	51,600	99%
Alliant Power Pro 1200-R	26.2	3,585	26.9	3,665	27.6	3,740	28.4	3,830	29.1	3,910	51,700	91%
Shooters World AR Plus	26.9	3,580	27.6	3,655	28.4	3,745	29.1	3,820	29.9	3,910	51,900	93%
Vihtavuori N133	26.7	3,545	27.4	3,620	28.2	3,705	28.9	3,780	29.7	3,865	50,500	105%
Alliant Reloder 10x	25.4	3,515	26.1	3,595	26.8	3,675	27.5	3,755	28.2	3,835	51,900	98%
Ramshot TAC	27.8	3,500	28.6	3,585	29.4	3,670	30.1	3,745	30.9	3,830	52,000	101%
Winchester 748	29.4	3,470	30.2	3,555	31.1	3,650	31.9	3,740	32.7	3,825	51,700	104%
Accurate 2015	26.2	3,485	26.9	3,560	27.6	3,640	28.4	3,725	29.1	3,805	51,700	93%
Shooters World Match Rifle	28.9	3,455	29.7	3,540	30.5	3,625	31.3	3,710	32.1	3,800	51,700	102%
Hodgdon H322	26.3	3,475	27.0	3,550	27.8	3,640	28.5	3,715	29.2	3,795	51,700	95%
Hodgdon H335	27.6	3,455	28.4	3,545	29.1	3,620	29.9	3,705	30.7	3,790	51,800	93%
Shooters World Tactical Rifle	27.3	3,415	28.1	3,500	28.8	3,580	29.6	3,665	30.3	3,740	51,600	96%

50 gr Bullet · 25" barrel

COAL: 2.000" • Bullet length: 0.713" • Seat depth: 0.238" • Usable capacity: 32.3 / 34.6 gr H_2O

Powder	STEP 1 · 90%		STEP 2		STEP 3		STEP 4		STEP 5 · LIMIT			
	gr	fps	gr	fps	gr	fps	gr	fps	gr	fps	psi	Fill
IMR 8208 XBR	28.1	3,395	28.9	3,475	29.6	3,550	30.4	3,630	31.2	3,710	51,800	105%
Hodgdon Benchmark	27.6	3,395	28.4	3,475	29.1	3,545	29.9	3,625	30.7	3,705	51,700	105%
Accurate 2520	29.3	3,390	30.1	3,465	30.9	3,545	31.7	3,620	32.5	3,700	51,600	103%
Vihtavuori N140	29.5	3,360	30.3	3,440	31.1	3,520	32.0	3,610	32.8	3,690	51,800	103%
Hodgdon CFE BLK	24.2	3,390	24.9	3,465	25.5	3,530	26.2	3,605	26.9	3,680	51,600	86%
Accurate 2460	27.9	3,365	28.7	3,440	29.4	3,510	30.2	3,585	31.0	3,665	51,800	96%
Hodgdon H4895	27.5	3,350	28.3	3,430	29.0	3,500	29.8	3,580	30.5	3,655	51,700	98%
Ramshot X-Terminator	27.3	3,360	28.1	3,435	28.8	3,505	29.6	3,580	30.3	3,650	51,700	95%
Norma 202	28.0	3,330	28.8	3,405	29.6	3,485	30.3	3,555	31.1	3,635	52,000	104%
Vihtavuori N135	26.9	3,340	27.6	3,405	28.4	3,485	29.1	3,555	29.9	3,635	51,900	100%
Vihtavuori N530	26.6	3,330	27.4	3,410	28.1	3,480	28.9	3,565	29.6	3,635	52,000	98%
Alliant Reloder 15	28.5	3,255	29.3	3,335	30.1	3,415	30.9	3,495	31.7	3,575	49,100	105%
Vihtavuori N133	25.6	3,280	26.3	3,350	27.0	3,420	27.7	3,490	28.4	3,560	51,600	101%
Accurate 2230	26.6	3,280	27.3	3,345	28.1	3,420	28.8	3,490	29.5	3,555	51,900	92%
Hodgdon Leverevolution	28.5	3,235	29.3	3,310	30.1	3,390	30.9	3,470	31.7	3,550	51,700	94%
Ramshot TAC	26.7	3,245	27.4	3,315	28.2	3,395	28.9	3,465	29.7	3,545	51,900	98%
Shooters World The Patriot	25.8	3,245	26.5	3,315	27.3	3,395	28.0	3,465	28.7	3,535	51,900	92%
Reload Swiss RS50	29.0	3,205	29.8	3,280	30.6	3,360	31.4	3,440	32.2	3,520	51,400	105%
Hodgdon H335	26.5	3,215	27.2	3,285	27.9	3,355	28.7	3,435	29.4	3,505	51,600	90%
Shooters World Tactical Rifle	26.2	3,190	26.9	3,265	27.6	3,335	28.4	3,415	29.1	3,485	51,800	93%

55 gr Bullet · 25" barrel

COAL: 2.000" • Bullet length: 0.724" • Seat depth: 0.249" • Usable capacity: 32.2 / 34.6 gr H_2O

Powder	STEP 1 · 90%		STEP 2		STEP 3		STEP 4		STEP 5 · LIMIT			
	gr	fps	gr	fps	gr	fps	gr	fps	gr	fps	psi	Fill
IMR 8208 XBR	27.4	3,265	28.1	3,330	28.9	3,410	29.6	3,480	30.4	3,560	51,700	102%
Vihtavuori N140	28.9	3,250	29.7	3,325	30.5	3,405	31.3	3,480	32.1	3,560	51,900	101%
Accurate 2520	28.6	3,250	29.4	3,325	30.2	3,405	31.0	3,480	31.8	3,555	51,600	101%
Hodgdon Benchmark	26.9	3,255	27.6	3,325	28.4	3,405	29.1	3,475	29.9	3,550	51,700	102%
Vihtavuori N540	28.6	3,235	29.4	3,310	30.2	3,385	31.0	3,460	31.8	3,535	50,100	105%
Hodgdon H4895	26.8	3,215	27.6	3,290	28.3	3,360	29.1	3,440	29.8	3,510	51,700	96%
Hodgdon CFE 223	29.1	3,200	29.9	3,275	30.7	3,350	31.5	3,430	32.3	3,505	51,900	102%
Accurate 2460	27.1	3,210	27.9	3,285	28.6	3,350	29.4	3,425	30.1	3,495	51,700	94%
IMR 4895	27.5	3,180	28.3	3,260	29.0	3,325	29.8	3,405	30.5	3,475	51,700	98%
Vihtavuori N530	25.7	3,190	26.4	3,260	27.1	3,330	27.9	3,405	28.6	3,475	51,900	95%
Winchester 748	27.9	3,170	28.7	3,250	29.4	3,315	30.2	3,395	31.0	3,475	52,000	99%
Reload Swiss RS40	25.0	3,160	25.7	3,230	26.4	3,300	27.1	3,370	27.8	3,440	51,600	92%
IMR 4064	27.3	3,135	28.1	3,210	28.8	3,280	29.6	3,355	30.3	3,425	51,700	101%
Ramshot TAC	26.2	3,120	26.9	3,190	27.6	3,260	28.4	3,335	29.1	3,405	51,900	96%
IMR 4166	26.6	3,100	27.4	3,175	28.1	3,245	28.9	3,325	29.6	3,395	51,900	102%
Alliant TS 15.5	27.5	3,075	28.3	3,155	29.1	3,230	29.8	3,300	30.6	3,380	51,800	102%
Hodgdon H335	25.9	3,085	26.6	3,155	27.4	3,235	28.1	3,300	28.8	3,370	51,800	88%
Shooters World The Patriot	25.1	3,095	25.8	3,160	26.5	3,230	27.2	3,295	27.9	3,365	51,600	90%
Shooters World Tactical Rifle	25.7	3,080	26.4	3,150	27.1	3,220	27.8	3,290	28.5	3,355	52,000	91%
Winchester StaBALL Match	27.1	3,055	27.9	3,130	28.6	3,195	29.4	3,275	30.1	3,340	48,900	105%

62 gr Bullet · 25" barrel

COAL: 2.030" • Bullet length: 0.776" • Seat depth: 0.271" • Usable capacity: 32.1 / 34.6 gr H_2O

Powder	STEP 1 · 90%		STEP 2		STEP 3		STEP 4		STEP 5 · LIMIT			
	gr	fps	gr	fps	gr	fps	gr	fps	gr	fps	psi	Fill
Vihtavuori N140	28.0	3,100	28.8	3,175	29.6	3,250	30.3	3,315	31.1	3,390	51,700	99%
Accurate 2520	27.8	3,095	28.6	3,170	29.4	3,240	30.1	3,305	30.9	3,380	51,700	99%
Vihtavuori N540	27.9	3,100	28.7	3,170	29.4	3,235	30.2	3,305	31.0	3,380	51,800	103%
IMR 8208 XBR	26.5	3,100	27.2	3,165	27.9	3,235	28.7	3,310	29.4	3,375	51,700	99%
Hodgdon Benchmark	26.0	3,090	26.7	3,155	27.4	3,220	28.2	3,300	28.9	3,365	51,800	99%
Hodgdon CFE 223	28.4	3,065	29.2	3,140	29.9	3,205	30.7	3,280	31.5	3,355	52,000	100%
Hodgdon H4895	26.0	3,060	26.7	3,125	27.4	3,190	28.2	3,265	28.9	3,330	51,700	93%
Winchester 748	27.2	3,040	27.9	3,105	28.7	3,180	29.4	3,245	30.2	3,320	51,900	97%
Hodgdon Leverevolution	27.3	3,000	28.1	3,075	28.8	3,140	29.6	3,215	30.3	3,280	51,800	90%
Vihtavuori N150	27.0	2,990	27.8	3,065	28.5	3,130	29.3	3,200	30.0	3,270	50,300	105%
Accurate 4064	27.0	2,985	27.8	3,060	28.5	3,125	29.3	3,200	30.0	3,265	52,000	104%
Hodgdon Varget	26.4	2,985	27.1	3,050	27.9	3,130	28.6	3,195	29.3	3,260	51,900	95%
Vihtavuori N135	25.0	2,995	25.7	3,060	26.4	3,125	27.1	3,190	27.8	3,255	51,700	94%
Winchester StaBALL Match	27.0	2,975	27.8	3,050	28.5	3,115	29.3	3,190	30.0	3,255	51,600	105%
Alliant Power Pro Varmint	25.9	2,975	26.6	3,040	27.4	3,115	28.1	3,180	28.8	3,245	51,800	95%
Accurate 2700	29.5	2,935	30.3	3,010	31.1	3,080	32.0	3,165	32.8	3,240	51,700	104%
Ramshot TAC	25.5	2,970	26.2	3,035	26.9	3,105	27.6	3,170	28.3	3,235	51,900	94%
Shooters World The Creed	27.3	2,955	28.1	3,030	28.8	3,095	29.6	3,170	30.3	3,235	51,900	98%
Shooters World Precision Rifle	26.6	2,935	27.4	3,010	28.1	3,075	28.9	3,155	29.6	3,220	51,800	102%
Vihtavuori N133	23.9	2,945	24.6	3,010	25.3	3,075	25.9	3,135	26.6	3,200	51,600	95%

69 gr Bullet · 25" barrel

COAL: 2.120" • Bullet length: 0.982" • Seat depth: 0.386" • Usable capacity: 31.0 / 34.6 gr H_2O

Powder	STEP 1 · 90%		STEP 2		STEP 3		STEP 4		STEP 5 · LIMIT			
	gr	fps	gr	fps	gr	fps	gr	fps	gr	fps	psi	Fill
Vihtavuori N140	26.6	2,920	27.4	2,995	28.1	3,060	28.9	3,135	29.6	3,200	51,700	97%
Accurate 2520	26.6	2,930	27.3	2,990	28.1	3,060	28.8	3,125	29.5	3,190	51,900	98%
Ramshot Big Game	28.7	2,895	29.5	2,970	30.3	3,040	31.1	3,110	31.9	3,185	51,900	105%
IMR 8208 XBR	25.1	2,915	25.8	2,980	26.5	3,045	27.2	3,105	27.9	3,175	51,700	98%
Vihtavuori N540	26.4	2,910	27.1	2,970	27.9	3,040	28.6	3,105	29.3	3,170	51,600	100%
Hodgdon CFE 223	27.0	2,890	27.8	2,965	28.5	3,030	29.3	3,100	30.0	3,165	51,500	99%
Hodgdon Benchmark	24.7	2,905	25.4	2,970	26.0	3,030	26.7	3,095	27.4	3,160	51,800	98%
Winchester 748	25.9	2,870	26.6	2,935	27.4	3,010	28.1	3,075	28.8	3,140	51,700	96%
Hodgdon H4895	24.8	2,885	25.5	2,950	26.1	3,005	26.8	3,070	27.5	3,135	51,700	92%
Hodgdon H4350	28.4	2,825	29.2	2,900	29.9	2,965	30.7	3,035	31.5	3,110	51,800	103%
Shooters World Match Rifle	25.5	2,840	26.2	2,905	26.9	2,970	27.6	3,035	28.3	3,105	51,900	94%
Hodgdon Leverevolution	26.0	2,835	26.7	2,900	27.4	2,965	28.2	3,035	28.9	3,100	51,700	89%
Hodgdon Varget	25.1	2,820	25.8	2,885	26.5	2,950	27.2	3,020	27.9	3,085	51,800	94%
Norma 202	24.8	2,825	25.5	2,890	26.2	2,955	26.9	3,015	27.6	3,080	51,800	97%
Winchester StaBALL Match	25.8	2,815	26.5	2,875	27.3	2,950	28.0	3,015	28.7	3,080	51,700	104%
IMR 4064	25.0	2,820	25.7	2,885	26.4	2,950	27.1	3,015	27.8	3,075	51,900	96%
IMR 4320	25.5	2,795	26.2	2,860	26.9	2,925	27.6	2,990	28.3	3,055	51,700	92%
Hodgdon H414	28.1	2,770	28.9	2,840	29.6	2,905	30.4	2,975	31.2	3,050	51,900	103%
Shooters World Precision Rifle	25.4	2,785	26.1	2,850	26.8	2,915	27.5	2,980	28.2	3,045	51,800	101%
Vihtavuori N135	23.7	2,810	24.4	2,870	25.0	2,925	25.6	2,980	26.3	3,045	51,800	92%

77 gr Bullet · 25" barrel

COAL: 2.160" • Bullet length: 1.070" • Seat depth: 0.435" • Usable capacity: 30.5 / 34.6 gr H_2O

Powder	STEP 1 · 90%		STEP 2		STEP 3		STEP 4		STEP 5 · LIMIT			
	gr	fps	gr	fps	gr	fps	gr	fps	gr	fps	psi	Fill
Alliant Power Pro 2000-MR	27.4	2,805	28.1	2,865	28.9	2,935	29.6	3,000	30.4	3,070	50,100	105%
Ramshot Big Game	27.8	2,765	28.6	2,835	29.4	2,905	30.1	2,965	30.9	3,035	52,000	103%
Vihtavuori N550	27.4	2,775	28.1	2,835	28.9	2,900	29.6	2,960	30.4	3,030	50,500	105%
Vihtavuori N140	25.6	2,765	26.3	2,830	27.0	2,890	27.7	2,955	28.4	3,015	51,800	95%
Accurate 2520	25.5	2,755	26.2	2,815	26.9	2,875	27.6	2,940	28.3	3,000	51,700	96%
Hodgdon CFE 223	26.1	2,745	26.8	2,805	27.6	2,880	28.3	2,940	29.0	3,000	51,700	97%
Hodgdon H380	27.1	2,735	27.9	2,805	28.6	2,865	29.4	2,935	30.1	3,000	51,300	105%
Reload Swiss RS52	25.3	2,735	26.0	2,795	26.7	2,860	27.4	2,925	28.1	2,990	51,900	97%
Winchester StaBALL 6.5	28.5	2,710	29.3	2,780	30.1	2,850	30.9	2,920	31.7	2,990	51,100	105%
Vihtavuori N540	25.2	2,735	25.9	2,795	26.6	2,855	27.3	2,915	28.0	2,975	51,800	98%
Winchester 748	25.0	2,720	25.7	2,785	26.4	2,850	27.1	2,910	27.8	2,975	51,700	94%
Alliant Reloder 15	24.8	2,715	25.5	2,775	26.2	2,835	26.9	2,900	27.6	2,960	52,000	97%
Hodgdon H4895	23.8	2,715	24.4	2,770	25.1	2,835	25.8	2,900	26.4	2,955	51,700	90%
Winchester 760	27.5	2,680	28.3	2,750	29.0	2,815	29.8	2,885	30.5	2,945	51,700	103%
Hodgdon Leverevolution	25.1	2,690	25.8	2,755	26.5	2,815	27.2	2,880	27.9	2,940	51,800	87%
Hodgdon Varget	24.2	2,680	24.9	2,740	25.5	2,795	26.2	2,860	26.9	2,925	52,000	92%
Winchester StaBALL Match	25.0	2,675	25.7	2,735	26.4	2,795	27.1	2,860	27.8	2,920	51,900	102%
Alliant Power Pro 4000-MR	28.3	2,625	29.1	2,695	29.9	2,760	30.6	2,825	31.4	2,895	51,900	105%
Norma 203B	24.2	2,650	24.9	2,715	25.5	2,765	26.2	2,830	26.9	2,895	51,800	96%
Ramshot TAC	23.4	2,640	24.0	2,690	24.7	2,755	25.4	2,820	26.0	2,875	51,600	91%

90 gr Bullet · 25" barrel

COAL: 2.245" • Bullet length: 1.203" • Seat depth: 0.483" • Usable capacity: 30.1 / 34.6 gr H_2O

Powder	STEP 1 · 90%		STEP 2		STEP 3		STEP 4		STEP 5 · LIMIT			
	gr	fps	gr	fps	gr	fps	gr	fps	gr	fps	psi	Fill
Alliant Power Pro 2000-MR	26.5	2,635	27.2	2,695	27.9	2,755	28.7	2,820	29.4	2,880	51,700	103%
Ramshot Big Game	26.6	2,580	27.3	2,635	28.1	2,705	28.8	2,760	29.5	2,820	51,800	100%
Winchester StaBALL 6.5	27.5	2,555	28.3	2,620	29.0	2,680	29.8	2,745	30.5	2,805	51,700	102%
Accurate 4350	27.1	2,545	27.9	2,610	28.6	2,670	29.4	2,740	30.1	2,800	50,800	105%
Vihtavuori N550	25.8	2,560	26.5	2,615	27.3	2,680	28.0	2,735	28.7	2,795	51,900	100%
Hodgdon H380	25.9	2,545	26.6	2,605	27.4	2,670	28.1	2,730	28.8	2,790	51,900	102%
Hodgdon SUPERFORMANCE	28.3	2,535	29.1	2,600	29.9	2,665	30.6	2,725	31.4	2,790	51,700	102%
IMR 4350	26.5	2,530	27.2	2,590	27.9	2,650	28.7	2,715	29.4	2,775	52,000	105%
Hodgdon CFE 223	24.8	2,530	25.5	2,590	26.2	2,650	26.9	2,710	27.6	2,770	51,800	94%
Accurate 2700	26.4	2,520	27.1	2,575	27.9	2,645	28.6	2,700	29.3	2,760	52,000	99%
Alliant Reloder 16	25.6	2,505	26.3	2,565	27.0	2,625	27.7	2,680	28.4	2,740	49,800	105%
Accurate 2520	23.9	2,505	24.6	2,565	25.3	2,620	25.9	2,670	26.6	2,730	51,600	91%
Hodgdon H414	26.0	2,485	26.7	2,545	27.4	2,600	28.2	2,670	28.9	2,730	51,600	98%
Reload Swiss RS70	28.1	2,470	28.9	2,535	29.6	2,595	30.4	2,660	31.2	2,730	51,800	105%
Hodgdon H4831SC	27.7	2,460	28.5	2,525	29.3	2,590	30.0	2,650	30.8	2,715	51,700	103%
Hodgdon Leverevolution	23.9	2,485	24.5	2,540	25.2	2,600	25.9	2,660	26.5	2,710	51,700	84%
Vihtavuori N540	23.6	2,490	24.3	2,545	24.9	2,595	25.6	2,655	26.2	2,705	51,900	93%
Winchester StaBALL Match	23.9	2,475	24.5	2,525	25.2	2,585	25.9	2,645	26.5	2,695	51,800	99%
Hodgdon Varget	22.9	2,465	23.5	2,520	24.1	2,570	24.8	2,630	25.4	2,685	51,600	88%
Ramshot TAC	22.2	2,415	22.8	2,470	23.4	2,525	24.1	2,585	24.7	2,635	51,600	87%

.22 BR Remington

The .22 BR Remington originated around 1963. In that year benchrest shooter Jim Stekl necked the .308 x 1.5-inch Barnes case down to .22 caliber. He also lengthened it by about .020 inch and increased the shoulder angle to 30 degrees. It was one of several small-caliber wildcats built on the Barnes case during that period. In 1978 Remington standardized the dimensions and began producing brass for it. The company made it part of its BR family alongside the 6mm BR Remington.

The .22 BR was developed for benchrest competition. Yet the 22 PPC and 6mm PPC soon came to dominate that sport. The .22 BR instead found its main following among varmint hunters and accuracy-minded shooters using custom rifles. With bullets of 40 to 60 grains it approaches 3,900 fps from a modest powder charge. It has never been a factory rifle chambering. Loaded ammunition is not generally available. Cases are commonly formed from 6mm BR brass. The .22 BR also served as the parent of the .20 BR.

Cartridge specifications	
Bullet Diameter	**0.224" (5.69 mm)**
Max Case Length	**1.540" (39.12 mm)**
Case Trim Length	**1.530" (38.86 mm)**
Max COAL	**2.080" (52.83 mm)**
Primer Pocket	**Small Rifle**
Standard Twist	**1:8"**
Case Capacity	**35.9 gr H_2O**
Max Pressure	**60,000 psi (SAAMI)**

40 gr Bullet · 25" barrel

COAL: 1.993" • Bullet length: 0.677" • Seat depth: 0.224" • Usable capacity: 33.8 / 35.9 gr H_2O

Powder	STEP 1 · 90%		STEP 2		STEP 3		STEP 4		STEP 5 · LIMIT			
	gr	fps	gr	fps	gr	fps	gr	fps	gr	fps	psi	Fill
Hodgdon CFE BLK	27.6	3,925	28.4	4,010	29.1	4,085	29.9	4,175	30.7	4,260	59,600	94%
Shooters World SBR-SOCOM	23.7	3,855	24.4	3,940	25.0	4,010	25.6	4,085	26.3	4,165	59,700	80%
Hodgdon Leverevolution	33.4	3,765	34.3	3,860	35.3	3,965	36.2	4,060	37.1	4,155	59,500	105%
Alliant AR-Comp	29.8	3,805	30.6	3,890	31.5	3,980	32.3	4,065	33.1	4,150	57,100	105%
Vihtavuori N130	27.5	3,795	28.3	3,885	29.0	3,960	29.8	4,050	30.5	4,125	59,500	104%
Accurate 2460	31.1	3,765	32.0	3,855	32.9	3,945	33.7	4,030	34.6	4,120	59,600	103%
Reload Swiss RS40	29.1	3,775	29.9	3,860	30.7	3,945	31.5	4,035	32.3	4,120	59,700	102%
Accurate 2230	30.6	3,770	31.5	3,860	32.3	3,940	33.1	4,020	34.0	4,115	59,900	102%
Accurate 2200	28.0	3,750	28.8	3,835	29.6	3,920	30.3	3,995	31.1	4,085	59,700	104%
Ramshot X-Terminator	30.2	3,745	31.0	3,825	31.9	3,915	32.7	3,995	33.5	4,075	59,700	100%
Alliant Reloder 7	26.6	3,735	27.3	3,815	28.1	3,900	28.8	3,975	29.5	4,055	59,800	93%
Hodgdon H4895	30.3	3,695	31.2	3,790	32.0	3,875	32.9	3,970	33.7	4,055	59,800	103%
Hodgdon H335	30.2	3,670	31.0	3,755	31.9	3,845	32.7	3,930	33.5	4,015	59,900	98%
Accurate 2015	28.5	3,665	29.3	3,750	30.1	3,840	30.9	3,925	31.7	4,010	59,700	97%
Hodgdon H322	28.6	3,660	29.4	3,745	30.2	3,830	31.0	3,915	31.8	4,005	59,500	100%
IMR 3031	29.4	3,650	30.2	3,740	31.1	3,835	31.9	3,920	32.7	4,005	59,700	103%
IMR 4198	25.7	3,685	26.4	3,760	27.1	3,840	27.9	3,925	28.6	4,000	59,900	102%
Shooters World Tactical Rifle	29.7	3,610	30.5	3,695	31.4	3,790	32.2	3,875	33.0	3,960	59,900	101%
Alliant Power Pro Varmint	30.2	3,605	31.0	3,690	31.9	3,780	32.7	3,865	33.5	3,950	58,700	105%
IMR 8208 XBR	29.3	3,560	30.1	3,645	31.0	3,735	31.8	3,820	32.6	3,905	56,700	105%

45 gr Bullet · 25" barrel

COAL: 1.914" • Bullet length: 0.598" • Seat depth: 0.224" • Usable capacity: 33.8 / 35.9 gr H_2O

Powder	STEP 1 · 90%		STEP 2		STEP 3		STEP 4		STEP 5 · LIMIT			
	gr	fps	gr	fps	gr	fps	gr	fps	gr	fps	psi	Fill
Hodgdon CFE BLK	27.0	3,735	27.8	3,820	28.5	3,890	29.3	3,975	30.0	4,050	59,600	91%
Hodgdon Leverevolution	32.9	3,660	33.8	3,750	34.8	3,850	35.7	3,940	36.6	4,035	59,900	104%
Alliant AR-Comp	29.5	3,685	30.3	3,765	31.1	3,845	32.0	3,935	32.8	4,015	59,700	104%
Vihtavuori N530	29.7	3,635	30.5	3,720	31.4	3,815	32.2	3,895	33.0	3,980	59,000	105%
Reload Swiss RS40	28.5	3,625	29.3	3,705	30.1	3,790	30.9	3,875	31.7	3,955	59,700	100%
Accurate 2460	30.3	3,610	31.2	3,695	32.0	3,775	32.9	3,865	33.7	3,945	59,600	100%
Alliant Power Pro 1200-R	27.8	3,620	28.6	3,700	29.4	3,785	30.1	3,860	30.9	3,940	59,600	93%
Shooters World AR Plus	28.6	3,610	29.4	3,690	30.2	3,770	31.0	3,855	31.8	3,935	59,600	95%
Accurate 2230	29.7	3,595	30.5	3,675	31.4	3,760	32.2	3,840	33.0	3,915	59,900	99%
Hodgdon H4895	29.7	3,575	30.5	3,655	31.4	3,745	32.2	3,825	33.0	3,910	59,600	101%
Hodgdon BL-C(2)	31.8	3,535	32.7	3,630	33.5	3,710	34.4	3,805	35.3	3,900	56,800	105%
Ramshot X-Terminator	29.3	3,575	30.1	3,650	31.0	3,735	31.8	3,815	32.6	3,895	60,000	98%
Winchester 748	31.0	3,525	31.9	3,620	32.7	3,700	33.5	3,780	34.4	3,875	58,000	105%
Vihtavuori N140	31.2	3,510	32.1	3,600	33.0	3,690	33.8	3,775	34.7	3,865	56,700	105%
Hodgdon H322	28.2	3,540	29.0	3,620	29.8	3,705	30.5	3,780	31.3	3,860	59,900	98%
Accurate 2495	29.8	3,510	30.6	3,590	31.5	3,685	32.3	3,765	33.1	3,850	59,700	99%
Alliant Power Pro Varmint	29.8	3,505	30.6	3,585	31.5	3,675	32.3	3,755	33.1	3,835	59,700	104%
Hodgdon Varget	30.6	3,480	31.5	3,575	32.3	3,655	33.1	3,740	34.0	3,835	56,700	105%
IMR 8208 XBR	29.3	3,515	30.1	3,595	30.9	3,675	31.7	3,755	32.5	3,835	60,000	104%
Shooters World Tactical Rifle	29.2	3,500	30.0	3,580	30.8	3,660	31.6	3,745	32.4	3,825	59,900	99%

50 gr Bullet · 25" barrel

COAL: 2.020" • Bullet length: 0.713" • Seat depth: 0.233" • Usable capacity: 33.6 / 35.9 gr H_2O

Powder	STEP 1 · 90%		STEP 2		STEP 3		STEP 4		STEP 5 · LIMIT			
	gr	fps	gr	fps	gr	fps	gr	fps	gr	fps	psi	Fill
Hodgdon Leverevolution	32.3	3,540	33.2	3,630	34.1	3,715	35.0	3,805	35.9	3,895	59,800	102%
Hodgdon CFE BLK	26.4	3,555	27.1	3,625	27.9	3,705	28.6	3,780	29.3	3,850	59,900	90%
Alliant AR-Comp	28.7	3,510	29.5	3,590	30.3	3,665	31.1	3,745	31.9	3,825	59,800	102%
Hodgdon BL-C(2)	31.7	3,475	32.6	3,560	33.5	3,650	34.3	3,730	35.2	3,825	59,300	105%
Vihtavuori N530	28.9	3,505	29.7	3,585	30.5	3,665	31.3	3,745	32.1	3,825	59,700	102%
IMR 4895	30.5	3,470	31.4	3,555	32.2	3,635	33.0	3,715	33.9	3,805	59,600	104%
Vihtavuori N135	29.2	3,500	30.0	3,575	30.8	3,655	31.6	3,730	32.4	3,805	59,700	104%
Vihtavuori N140	31.1	3,455	32.0	3,540	32.9	3,630	33.7	3,710	34.6	3,800	60,000	105%
Reload Swiss RS40	27.9	3,475	28.7	3,555	29.4	3,625	30.2	3,705	31.0	3,785	59,600	98%
Hodgdon Varget	30.5	3,430	31.4	3,520	32.2	3,600	33.0	3,680	33.9	3,770	59,600	105%
Accurate 2460	29.5	3,455	30.3	3,530	31.1	3,605	32.0	3,690	32.8	3,765	59,900	98%
Hodgdon Benchmark	28.8	3,450	29.6	3,530	30.4	3,605	31.2	3,685	32.0	3,765	59,600	105%
Hodgdon H4895	29.1	3,445	29.9	3,525	30.7	3,600	31.5	3,680	32.3	3,760	59,900	99%
Shooters World Match Rifle	30.2	3,415	31.1	3,505	31.9	3,580	32.8	3,670	33.6	3,750	59,600	103%
Hodgdon H335	29.0	3,400	29.8	3,480	30.6	3,555	31.4	3,635	32.2	3,715	59,800	95%
Ramshot X-Terminator	28.4	3,400	29.2	3,475	30.0	3,550	30.8	3,625	31.6	3,705	59,900	95%
Shooters World The Patriot	28.1	3,405	28.9	3,485	29.6	3,550	30.4	3,625	31.2	3,705	59,800	96%
Alliant Power Pro Varmint	29.2	3,375	30.0	3,455	30.8	3,530	31.6	3,610	32.4	3,690	59,700	102%
IMR 8208 XBR	28.4	3,365	29.2	3,445	30.0	3,520	30.8	3,600	31.6	3,675	59,800	102%
Alliant Reloder 15	29.7	3,315	30.5	3,395	31.4	3,480	32.2	3,555	33.0	3,635	57,000	105%

55 gr Bullet · 25" barrel

COAL: 2.020" • Bullet length: 0.723" • Seat depth: 0.243" • Usable capacity: 33.6 / 35.9 gr H_2O

Powder	STEP 1 · 90%		STEP 2		STEP 3		STEP 4		STEP 5 · LIMIT			
	gr	fps	gr	fps	gr	fps	gr	fps	gr	fps	psi	Fill
Hodgdon Leverevolution	31.8	3,430	32.7	3,515	33.5	3,595	34.4	3,680	35.3	3,765	59,800	100%
Hodgdon BL-C(2)	31.3	3,375	32.2	3,465	33.0	3,540	33.9	3,630	34.8	3,715	60,000	104%
Accurate 2520	30.7	3,390	31.6	3,475	32.4	3,545	33.3	3,630	34.1	3,705	59,500	104%
IMR 4895	29.9	3,355	30.7	3,430	31.6	3,515	32.4	3,590	33.2	3,670	59,800	102%
Hodgdon CFE 223	31.1	3,330	32.0	3,415	32.9	3,495	33.7	3,575	34.6	3,660	59,200	105%
Vihtavuori N530	28.0	3,365	28.8	3,440	29.6	3,515	30.3	3,585	31.1	3,660	59,600	99%
Hodgdon Varget	30.0	3,335	30.8	3,410	31.6	3,490	32.5	3,575	33.3	3,655	59,700	103%
Vihtavuori N140	30.4	3,335	31.3	3,415	32.1	3,495	32.9	3,570	33.8	3,655	59,600	103%
Vihtavuori N135	28.4	3,345	29.2	3,420	29.9	3,485	30.7	3,560	31.5	3,635	59,800	102%
Shooters World Match Rifle	29.8	3,315	30.6	3,390	31.5	3,475	32.3	3,555	33.1	3,630	60,000	101%
Norma 202	29.3	3,325	30.1	3,400	30.9	3,475	31.7	3,550	32.5	3,625	58,300	105%
Hodgdon H4895	28.4	3,310	29.2	3,385	30.0	3,460	30.8	3,540	31.6	3,615	59,900	97%
Hodgdon Benchmark	28.1	3,315	28.9	3,390	29.6	3,455	30.4	3,535	31.2	3,610	59,700	102%
Shooters World AR Plus	27.5	3,320	28.3	3,395	29.0	3,465	29.8	3,540	30.5	3,610	59,700	92%
Accurate 2460	28.7	3,300	29.5	3,375	30.3	3,445	31.1	3,520	31.9	3,595	59,800	95%
Alliant Power Pro Varmint	28.6	3,250	29.4	3,325	30.2	3,400	31.0	3,475	31.8	3,555	59,800	100%
Alliant Reloder 15	29.4	3,245	30.2	3,320	31.1	3,400	31.9	3,475	32.7	3,550	59,600	104%
Shooters World Tactical Rifle	28.0	3,250	28.8	3,325	29.6	3,405	30.3	3,470	31.1	3,550	60,000	95%
Shooters World The Patriot	27.4	3,255	28.1	3,320	28.9	3,395	29.6	3,460	30.4	3,535	59,500	94%
IMR 8208 XBR	27.7	3,235	28.5	3,310	29.3	3,385	30.0	3,455	30.8	3,530	59,700	99%

60 gr Bullet · 25" barrel

COAL: 2.050" • Bullet length: 0.804" • Seat depth: 0.294" • Usable capacity: 33.2 / 35.9 gr H_2O

Powder	STEP 1 · 90%		STEP 2		STEP 3		STEP 4		STEP 5 · LIMIT			
	gr	fps	gr	fps	gr	fps	gr	fps	gr	fps	psi	Fill
Hodgdon Leverevolution	31.0	3,310	31.9	3,390	32.7	3,465	33.5	3,540	34.4	3,625	59,600	99%
Hodgdon BL-C(2)	30.6	3,265	31.5	3,350	32.3	3,425	33.1	3,500	34.0	3,585	59,900	103%
Accurate 2520	29.9	3,255	30.7	3,330	31.6	3,410	32.4	3,485	33.2	3,560	59,500	103%
Hodgdon CFE 223	30.5	3,225	31.4	3,310	32.2	3,380	33.0	3,455	33.9	3,540	59,800	104%
Reload Swiss RS52	29.8	3,230	30.6	3,305	31.5	3,390	32.3	3,465	33.1	3,540	60,000	105%
Hodgdon Varget	29.3	3,225	30.1	3,300	30.9	3,375	31.7	3,450	32.5	3,530	59,900	102%
IMR 4895	29.0	3,220	29.8	3,295	30.6	3,370	31.4	3,445	32.2	3,520	59,500	100%
Shooters World Match Rifle	29.1	3,200	29.9	3,275	30.7	3,350	31.5	3,425	32.3	3,500	59,900	100%
Norma 202	28.6	3,205	29.4	3,275	30.2	3,350	31.0	3,425	31.8	3,495	59,900	104%
Ramshot TAC	28.3	3,205	29.1	3,280	29.9	3,355	30.6	3,420	31.4	3,495	59,800	101%
Alliant AR-Comp	27.1	3,200	27.9	3,270	28.6	3,335	29.4	3,410	30.1	3,475	59,800	97%
Hodgdon H4895	27.6	3,175	28.4	3,250	29.1	3,315	29.9	3,390	30.7	3,465	59,800	96%
Hodgdon Benchmark	27.3	3,180	28.1	3,255	28.8	3,320	29.6	3,395	30.3	3,460	59,900	101%
Shooters World AR Plus	26.7	3,170	27.4	3,240	28.2	3,315	28.9	3,380	29.7	3,455	59,900	91%
Accurate 2460	27.8	3,155	28.6	3,225	29.4	3,300	30.1	3,360	30.9	3,435	59,800	93%
Alliant Power Pro Varmint	27.9	3,130	28.7	3,205	29.4	3,270	30.2	3,345	31.0	3,415	60,000	99%
Alliant Reloder 15	28.5	3,120	29.3	3,195	30.1	3,265	30.9	3,340	31.7	3,415	59,700	102%
Vihtavuori N133	26.3	3,145	27.0	3,210	27.8	3,285	28.5	3,350	29.2	3,415	59,700	101%
IMR 8208 XBR	26.9	3,110	27.6	3,175	28.4	3,245	29.1	3,310	29.9	3,385	59,900	98%
IMR 4166	27.1	3,045	27.9	3,120	28.6	3,185	29.4	3,260	30.1	3,325	59,700	101%

63 gr Bullet · 25" barrel

COAL: 2.050" • Bullet length: 0.817" • Seat depth: 0.307" • Usable capacity: 33.0 / 35.9 gr H_2O

Powder	STEP 1 · 90%		STEP 2		STEP 3		STEP 4		STEP 5 · LIMIT			
	gr	fps	gr	fps	gr	fps	gr	fps	gr	fps	psi	Fill
Hodgdon Leverevolution	30.6	3,245	31.5	3,330	32.3	3,400	33.1	3,475	34.0	3,560	59,600	98%
Hodgdon BL-C(2)	30.2	3,200	31.1	3,285	31.9	3,360	32.8	3,445	33.6	3,520	59,600	102%
Accurate 2520	29.5	3,190	30.3	3,260	31.1	3,335	32.0	3,415	32.8	3,490	59,700	102%
Hodgdon CFE 223	30.2	3,175	31.0	3,245	31.9	3,330	32.7	3,400	33.5	3,475	59,800	103%
Reload Swiss RS52	29.4	3,165	30.2	3,240	31.1	3,325	31.9	3,400	32.7	3,475	59,800	104%
Hodgdon Varget	28.9	3,165	29.7	3,240	30.5	3,315	31.3	3,390	32.1	3,465	60,000	101%
Winchester 748	29.2	3,165	30.0	3,240	30.8	3,315	31.6	3,390	32.4	3,465	60,000	101%
Norma 202	28.2	3,140	29.0	3,210	29.8	3,280	30.5	3,345	31.3	3,420	59,800	103%
Hodgdon H4895	27.3	3,120	28.1	3,195	28.8	3,260	29.6	3,330	30.3	3,395	59,900	95%
Shooters World The Creed	29.3	3,085	30.1	3,160	31.0	3,240	31.8	3,315	32.6	3,390	59,800	103%
IMR 4320	28.7	3,085	29.5	3,160	30.3	3,235	31.1	3,305	31.9	3,385	59,600	97%
Hodgdon Benchmark	26.8	3,105	27.6	3,180	28.3	3,245	29.1	3,320	29.8	3,380	59,700	99%
Reload Swiss RS50	29.6	3,075	30.4	3,150	31.3	3,230	32.1	3,300	32.9	3,375	57,900	105%
Hodgdon H335	27.4	3,085	28.1	3,150	28.9	3,220	29.6	3,285	30.4	3,360	60,000	91%
Accurate 2460	27.4	3,085	28.1	3,150	28.9	3,220	29.6	3,280	30.4	3,355	59,700	92%
Alliant Power Pro Varmint	27.5	3,065	28.3	3,140	29.1	3,210	29.8	3,275	30.6	3,350	60,000	98%
Alliant Reloder 15	28.1	3,065	28.9	3,135	29.6	3,200	30.4	3,270	31.2	3,345	59,600	101%
Accurate 2015	26.0	3,060	26.7	3,125	27.4	3,190	28.2	3,265	28.9	3,330	59,900	91%
IMR 8208 XBR	26.5	3,045	27.2	3,110	27.9	3,170	28.7	3,245	29.4	3,310	59,600	97%
IMR 4166	26.8	2,995	27.6	3,065	28.3	3,130	29.1	3,205	29.8	3,270	60,000	100%

69 gr Bullet · 25" barrel

COAL: 2.010" • Bullet length: 0.931" • Seat depth: 0.461" • Usable capacity: 31.6 / 35.9 gr H_2O

Powder	STEP 1 · 90%		STEP 2		STEP 3		STEP 4		STEP 5 · LIMIT			
	gr	fps	gr	fps	gr	fps	gr	fps	gr	fps	psi	Fill
Hodgdon Leverevolution	29.3	3,100	30.1	3,175	30.9	3,245	31.7	3,320	32.5	3,395	59,600	98%
Accurate 2520	28.2	3,035	29.0	3,110	29.8	3,180	30.5	3,240	31.3	3,315	59,700	102%
Hodgdon CFE 223	28.8	3,020	29.6	3,090	30.4	3,165	31.2	3,235	32.0	3,310	59,900	103%
Reload Swiss RS52	28.1	3,020	28.9	3,095	29.6	3,160	30.4	3,235	31.2	3,310	59,500	104%
Hodgdon Varget	27.5	3,010	28.3	3,085	29.1	3,160	29.8	3,225	30.6	3,300	59,900	101%
Vihtavuori N540	28.1	3,025	28.9	3,095	29.6	3,160	30.4	3,230	31.2	3,300	58,100	105%
Winchester 748	27.8	3,010	28.6	3,085	29.4	3,160	30.1	3,220	30.9	3,295	59,700	101%
Ramshot TAC	26.6	2,975	27.4	3,050	28.1	3,115	28.9	3,185	29.6	3,250	59,700	100%
Norma 202	26.7	2,965	27.4	3,030	28.2	3,100	28.9	3,165	29.7	3,235	59,500	102%
Shooters World The Creed	28.0	2,950	28.8	3,020	29.6	3,095	30.3	3,160	31.1	3,230	59,800	102%
Alliant AR-Comp	25.3	2,950	26.0	3,010	26.7	3,075	27.4	3,140	28.1	3,205	59,600	95%
Hodgdon Benchmark	25.5	2,950	26.2	3,015	26.9	3,075	27.6	3,140	28.3	3,205	59,700	99%
Vihtavuori N135	25.6	2,950	26.3	3,010	27.0	3,075	27.7	3,140	28.4	3,200	59,600	98%
IMR 3031	25.3	2,935	26.0	3,000	26.7	3,065	27.4	3,130	28.1	3,195	59,600	95%
Alliant Reloder 17	29.0	2,890	29.8	2,965	30.6	3,040	31.4	3,115	32.2	3,190	60,000	102%
Alliant Reloder 15	26.7	2,915	27.4	2,975	28.2	3,045	28.9	3,110	29.7	3,180	59,900	100%
Accurate 2460	26.0	2,920	26.7	2,980	27.4	3,040	28.2	3,110	28.9	3,175	59,900	92%
Alliant Power Pro Varmint	26.2	2,910	26.9	2,975	27.6	3,040	28.4	3,110	29.1	3,175	59,500	97%
Shooters World Precision Rifle	26.9	2,895	27.6	2,955	28.4	3,030	29.1	3,095	29.9	3,170	57,400	105%
IMR 4166	25.6	2,850	26.3	2,915	27.0	2,980	27.7	3,045	28.4	3,110	59,700	100%

77 gr Bullet · 25" barrel

COAL: 2.080" • Bullet length: 1.066" • Seat depth: 0.526" • Usable capacity: 30.9 / 35.9 gr H_2O

Powder	STEP 1 · 90%		STEP 2		STEP 3		STEP 4		STEP 5 · LIMIT			
	gr	fps	gr	fps	gr	fps	gr	fps	gr	fps	psi	Fill
Hodgdon Leverevolution	28.2	2,935	29.0	3,005	29.8	3,080	30.5	3,140	31.3	3,210	59,600	97%
Hodgdon BL-C(2)	28.0	2,910	28.8	2,980	29.6	3,050	30.3	3,115	31.1	3,190	59,900	101%
Reload Swiss RS52	27.1	2,865	27.9	2,935	28.6	3,000	29.4	3,075	30.1	3,135	59,600	102%
Hodgdon CFE 223	27.7	2,855	28.5	2,925	29.3	2,995	30.0	3,060	30.8	3,130	59,800	101%
Winchester 748	26.8	2,855	27.6	2,925	28.3	2,985	29.1	3,060	29.8	3,125	59,900	99%
Hodgdon Varget	26.5	2,855	27.2	2,920	27.9	2,980	28.7	3,055	29.4	3,120	59,900	99%
Norma 201	25.6	2,855	26.3	2,920	27.0	2,985	27.7	3,055	28.4	3,120	59,500	102%
Vihtavuori N540	27.0	2,860	27.8	2,925	28.5	2,985	29.3	3,055	30.0	3,115	59,500	103%
Shooters World Match Rifle	26.5	2,835	27.2	2,900	27.9	2,960	28.7	3,030	29.4	3,095	60,000	98%
Ramshot Big Game	28.7	2,815	29.5	2,885	30.3	2,950	31.1	3,020	31.9	3,090	56,900	105%
IMR 4895	26.0	2,825	26.7	2,890	27.4	2,950	28.2	3,025	28.9	3,085	59,700	97%
Shooters World The Creed	26.9	2,795	27.6	2,855	28.4	2,930	29.1	2,990	29.9	3,060	59,800	100%
Alliant Reloder 17	28.0	2,765	28.8	2,840	29.6	2,910	30.3	2,975	31.1	3,050	59,700	101%
Accurate 2700	28.7	2,760	29.5	2,830	30.3	2,900	31.1	2,970	31.9	3,040	57,200	105%
Hodgdon H414	28.7	2,755	29.5	2,825	30.3	2,895	31.1	2,965	31.9	3,035	57,600	105%
Hodgdon H4895	24.8	2,780	25.5	2,840	26.2	2,905	26.9	2,965	27.6	3,030	59,800	92%
IMR 3031	24.3	2,765	25.0	2,830	25.6	2,885	26.3	2,945	27.0	3,010	59,900	93%
Alliant Reloder 15	25.5	2,745	26.2	2,805	26.9	2,870	27.6	2,930	28.3	2,990	59,700	98%
IMR 4451	28.1	2,675	28.9	2,745	29.6	2,805	30.4	2,875	31.2	2,950	56,600	105%
IMR 4166	24.6	2,690	25.3	2,755	26.0	2,815	26.6	2,870	27.3	2,930	59,600	98%

90 gr Bullet · 25" barrel

COAL: 2.080" • Bullet length: 1.206" • Seat depth: 0.666" • Usable capacity: 29.8 / 35.9 gr H_2O

Powder	STEP 1 · 90%		STEP 2		STEP 3		STEP 4		STEP 5 · LIMIT			
	gr	fps	gr	fps	gr	fps	gr	fps	gr	fps	psi	Fill
Hodgdon Leverevolution	26.6	2,705	27.3	2,765	28.1	2,835	28.8	2,895	29.5	2,955	59,800	94%
Hodgdon BL-C(2)	26.5	2,690	27.2	2,750	27.9	2,810	28.7	2,880	29.4	2,940	59,800	99%
Ramshot Big Game	27.5	2,640	28.3	2,705	29.1	2,775	29.8	2,835	30.6	2,900	59,600	104%
Hodgdon H4350	27.3	2,635	28.1	2,705	28.8	2,765	29.6	2,835	30.3	2,895	59,500	102%
Reload Swiss RS52	25.6	2,645	26.3	2,705	27.0	2,765	27.7	2,830	28.4	2,890	59,500	100%
Alliant Power Pro 2000-MR	26.6	2,630	27.4	2,695	28.1	2,755	28.9	2,825	29.6	2,885	59,900	104%
Norma 201	24.0	2,635	24.7	2,695	25.4	2,760	26.0	2,815	26.7	2,875	59,800	99%
Hodgdon Varget	24.8	2,620	25.5	2,680	26.1	2,730	26.8	2,790	27.5	2,855	59,600	96%
Alliant Reloder 17	26.6	2,590	27.3	2,655	28.1	2,725	28.8	2,785	29.5	2,845	59,900	99%
Accurate 2520	25.2	2,600	25.9	2,655	26.6	2,715	27.3	2,775	28.0	2,835	59,800	97%
Hodgdon H380	26.6	2,590	27.3	2,650	28.1	2,720	28.8	2,775	29.5	2,835	58,000	105%
Vihtavuori N540	25.1	2,600	25.8	2,660	26.5	2,715	27.2	2,775	27.9	2,835	59,900	99%
Reload Swiss RS50	26.0	2,580	26.7	2,635	27.4	2,695	28.2	2,765	28.9	2,825	59,600	102%
Shooters World The Creed	25.3	2,580	26.0	2,640	26.7	2,700	27.4	2,760	28.1	2,820	60,000	98%
Accurate 4064	24.8	2,570	25.5	2,630	26.2	2,690	26.9	2,750	27.6	2,815	59,700	103%
IMR 4895	24.2	2,580	24.9	2,640	25.5	2,690	26.2	2,750	26.9	2,810	59,700	93%
IMR 4451	27.1	2,545	27.9	2,615	28.6	2,675	29.4	2,740	30.1	2,805	59,700	105%
Shooters World Precision Rifle	24.6	2,550	25.3	2,610	26.0	2,670	26.6	2,720	27.3	2,785	59,600	101%
IMR 3031	22.7	2,520	23.3	2,570	23.9	2,625	24.6	2,685	25.2	2,740	59,500	90%
Alliant Reloder 15	23.7	2,505	24.4	2,565	25.0	2,615	25.6	2,665	26.3	2,725	59,800	94%

22 Creedmoor

The 22 Creedmoor began as a wildcat made by necking down the 6.5 Creedmoor case to accept .224-inch bullets. Horizon Firearms built its first rifle in the chambering in 2014. Over the following years the company promoted the cartridge heavily and supplied rifles, dies and ammunition. Predator hunters in Texas drove much of its development. They wanted a flat-shooting and low-recoil cartridge that could stabilize long and heavy .22-caliber bullets. Hornady submitted the cartridge to SAAMI in 2023 with a 1:8-inch twist standard, while 1:7-inch barrels are also widely used for the heaviest match bullets.

Hornady factory ammunition includes 80-grain bullets at nearly 3,300 fps. Lighter loads in the 65- to 69-grain range run at higher velocities. The cartridge is used for predator and varmint hunting, deer-sized game and long-range target shooting. In long-range work its high-ballistic-coefficient bullets reduce wind drift. Handloaders can also form brass by necking down 6.5 Creedmoor cases.

Cartridge specifications	
Bullet Diameter	**0.224" (5.69 mm)**
Max Case Length	**1.920" (48.77 mm)**
Case Trim Length	**1.910" (48.51 mm)**
Max COAL	**2.700" (68.58 mm)**
Primer Pocket	**Large Rifle**
Standard Twist	**1:8"**
Case Capacity	**49.5 gr H_2O**
Max Pressure	**62,000 psi (SAAMI)**

52 gr Bullet · 25" barrel

COAL: 2.355" • Bullet length: 0.742" • Seat depth: 0.307" • Usable capacity: 46.6 / 49.5 gr H_2O

Powder	STEP 1 · 90%		STEP 2		STEP 3		STEP 4		STEP 5 · LIMIT			
	gr	fps	gr	fps	gr	fps	gr	fps	gr	fps	psi	Fill
Hodgdon Leverevolution	37.8	3,685	38.8	3,765	39.9	3,855	41.0	3,940	42.0	4,020	61,700	86%
Vihtavuori N550	39.7	3,675	40.8	3,755	41.9	3,840	43.0	3,925	44.1	4,010	61,900	100%
Hodgdon BL-C(2)	37.0	3,620	38.0	3,700	39.0	3,780	40.1	3,865	41.1	3,950	62,000	89%
Reload Swiss RS52	36.5	3,620	37.5	3,700	38.5	3,785	39.5	3,865	40.5	3,945	61,700	91%
Winchester StaBALL 6.5	41.0	3,590	42.1	3,675	43.3	3,770	44.4	3,855	45.5	3,940	61,800	99%
Accurate 4350	41.0	3,565	42.1	3,655	43.3	3,750	44.4	3,840	45.5	3,935	61,600	102%
Hodgdon CFE 223	37.4	3,615	38.4	3,690	39.5	3,775	40.5	3,855	41.5	3,935	61,600	91%
Ramshot Big Game	39.2	3,590	40.3	3,675	41.4	3,755	42.4	3,835	43.5	3,920	61,700	95%
Alliant Reloder 16	39.6	3,575	40.7	3,655	41.8	3,740	42.9	3,830	44.0	3,915	61,200	105%
Hodgdon H4350	39.8	3,545	40.9	3,635	42.0	3,725	43.1	3,815	44.2	3,905	61,700	96%
Ramshot Hunter	41.2	3,540	42.4	3,635	43.5	3,720	44.6	3,805	45.8	3,905	61,800	104%
Accurate 4064	36.2	3,555	37.2	3,635	38.2	3,715	39.2	3,795	40.2	3,875	61,900	96%
Hodgdon SUPERFORMANCE	41.9	3,485	43.1	3,580	44.3	3,675	45.4	3,765	46.6	3,865	61,900	98%
Hodgdon H414	39.3	3,500	40.4	3,585	41.5	3,670	42.6	3,755	43.7	3,845	61,800	96%
Hodgdon Hybrid 100V	39.1	3,490	40.2	3,580	41.3	3,670	42.3	3,755	43.4	3,845	61,900	105%
Shooters World Precision Rifle	35.8	3,515	36.8	3,595	37.8	3,675	38.8	3,755	39.8	3,835	61,900	95%
Norma MRP	42.0	3,430	43.2	3,520	44.4	3,615	45.5	3,700	46.7	3,795	61,700	104%
Hodgdon H4831SC	41.8	3,425	42.9	3,510	44.1	3,605	45.3	3,700	46.4	3,785	62,000	100%
IMR 4831	40.3	3,415	41.4	3,500	42.5	3,590	43.7	3,690	44.8	3,780	61,900	103%
IMR 7828SSC	42.3	3,365	43.5	3,455	44.6	3,540	45.8	3,635	47.0	3,730	61,600	105%

55 gr Bullet · 25" barrel

COAL: 2.360" • Bullet length: 0.732" • Seat depth: 0.292" • Usable capacity: 46.8 / 49.5 gr H_2O

Powder	STEP 1 · 90%		STEP 2		STEP 3		STEP 4		STEP 5 · LIMIT			
	gr	fps	gr	fps	gr	fps	gr	fps	gr	fps	psi	Fill
Hodgdon Leverevolution	37.4	3,600	38.5	3,690	39.5	3,770	40.5	3,845	41.6	3,935	61,700	85%
Vihtavuori N550	39.1	3,590	40.2	3,670	41.3	3,750	42.3	3,825	43.4	3,910	61,700	98%
Accurate 4350	40.7	3,515	41.8	3,605	43.0	3,695	44.1	3,785	45.2	3,875	61,700	101%
Winchester StaBALL 6.5	40.7	3,530	41.8	3,615	43.0	3,705	44.1	3,790	45.2	3,875	61,900	97%
Hodgdon BL-C(2)	36.7	3,545	37.7	3,625	38.8	3,710	39.8	3,790	40.8	3,870	62,000	88%
Reload Swiss RS52	36.2	3,550	37.2	3,625	38.2	3,705	39.2	3,785	40.2	3,865	61,800	90%
Alliant Reloder 16	39.3	3,515	40.4	3,600	41.5	3,685	42.6	3,770	43.7	3,855	61,900	104%
Alliant Reloder 26	43.8	3,465	45.0	3,560	46.3	3,660	47.5	3,750	48.7	3,845	61,900	105%
Hodgdon H4350	39.4	3,490	40.5	3,580	41.6	3,665	42.7	3,755	43.8	3,840	61,800	94%
Ramshot Hunter	41.0	3,495	42.1	3,575	43.3	3,665	44.4	3,750	45.5	3,840	61,700	103%
IMR 4350	39.9	3,470	41.0	3,555	42.1	3,640	43.2	3,730	44.3	3,815	61,900	102%
Alliant Reloder 15	35.6	3,510	36.6	3,585	37.5	3,655	38.5	3,735	39.5	3,810	61,900	90%
Hodgdon SUPERFORMANCE	41.7	3,450	42.9	3,540	44.0	3,630	45.1	3,715	46.3	3,810	61,900	97%
Winchester StaBALL Match	35.9	3,490	36.9	3,565	37.9	3,645	38.9	3,720	39.9	3,795	61,800	96%
Hodgdon H414	39.1	3,450	40.2	3,530	41.3	3,615	42.3	3,695	43.4	3,780	61,900	95%
Winchester 760	39.1	3,450	40.2	3,535	41.3	3,615	42.3	3,695	43.4	3,780	62,000	95%
Vihtavuori N160	40.6	3,420	41.7	3,500	42.9	3,595	44.0	3,675	45.1	3,760	61,700	105%
Vihtavuori N555	41.1	3,385	42.3	3,480	43.4	3,565	44.6	3,665	45.7	3,750	58,800	105%
IMR 4831	40.1	3,375	41.2	3,460	42.3	3,545	43.4	3,635	44.5	3,725	61,700	102%
IMR 7828SSC	42.0	3,330	43.2	3,420	44.4	3,510	45.5	3,595	46.7	3,690	61,800	104%

62 gr Bullet · 25" barrel

COAL: 2.405" • Bullet length: 0.831" • Seat depth: 0.346" • Usable capacity: 46.3 / 49.5 gr H_2O

Powder	STEP 1 · 90%		STEP 2		STEP 3		STEP 4		STEP 5 · LIMIT			
	gr	fps	gr	fps	gr	fps	gr	fps	gr	fps	psi	Fill
Hodgdon Leverevolution	36.3	3,425	37.3	3,505	38.3	3,580	39.3	3,655	40.3	3,735	61,900	83%
Accurate 4350	39.6	3,385	40.7	3,470	41.8	3,555	42.9	3,635	44.0	3,720	61,800	99%
Alliant Reloder 26	42.8	3,365	44.0	3,455	45.1	3,535	46.3	3,625	47.5	3,715	61,900	103%
Alliant Reloder 23	40.2	3,370	41.3	3,450	42.5	3,540	43.6	3,620	44.7	3,705	60,600	105%
Winchester StaBALL 6.5	39.5	3,375	40.6	3,455	41.7	3,535	42.8	3,615	43.9	3,700	61,800	96%
Vihtavuori N555	40.6	3,350	41.7	3,435	42.9	3,525	44.0	3,610	45.1	3,695	61,700	105%
Ramshot Hunter	40.0	3,360	41.1	3,440	42.2	3,525	43.3	3,605	44.4	3,690	62,000	102%
Vihtavuori N550	37.4	3,390	38.5	3,465	39.5	3,540	40.5	3,610	41.6	3,690	61,700	94%
Alliant Reloder 16	38.0	3,365	39.0	3,435	40.1	3,515	41.2	3,595	42.2	3,670	62,000	101%
Hodgdon H4350	38.1	3,355	39.1	3,430	40.2	3,510	41.3	3,595	42.3	3,670	61,600	92%
Hodgdon SUPERFORMANCE	40.6	3,330	41.7	3,410	42.9	3,505	44.0	3,585	45.1	3,670	61,700	95%
Ramshot Big Game	37.7	3,355	38.8	3,435	39.8	3,510	40.9	3,590	41.9	3,665	61,900	92%
Norma 204	39.7	3,310	40.8	3,395	41.9	3,475	43.0	3,560	44.1	3,645	61,900	100%
Hodgdon H380	37.0	3,325	38.0	3,395	39.0	3,470	40.1	3,550	41.1	3,625	61,600	94%
Winchester 760	38.0	3,305	39.0	3,380	40.1	3,460	41.2	3,540	42.2	3,615	62,000	94%
Norma MRP	40.7	3,275	41.8	3,355	43.0	3,445	44.1	3,525	45.2	3,610	61,700	102%
Hodgdon H4831SC	40.4	3,265	41.5	3,345	42.6	3,425	43.8	3,515	44.9	3,600	61,700	98%
Reload Swiss RS50	35.7	3,300	36.7	3,375	37.7	3,445	38.7	3,520	39.7	3,595	61,900	90%
Vihtavuori N150	34.2	3,295	35.2	3,370	36.1	3,435	37.0	3,505	38.0	3,580	62,000	92%
IMR 7828SSC	40.9	3,235	42.0	3,320	43.1	3,400	44.3	3,490	45.4	3,575	61,800	102%

69 gr Bullet · 25" barrel

COAL: 2.485" • Bullet length: 0.972" • Seat depth: 0.406" • Usable capacity: 45.7 / 49.5 gr H_2O

Powder	STEP 1 · 90%		STEP 2		STEP 3		STEP 4		STEP 5 · LIMIT			
	gr	fps	gr	fps	gr	fps	gr	fps	gr	fps	psi	Fill
Alliant Reloder 26	41.6	3,250	42.8	3,335	43.9	3,415	45.1	3,500	46.2	3,585	61,700	102%
Alliant Reloder 23	39.4	3,260	40.5	3,340	41.6	3,420	42.7	3,500	43.8	3,580	61,900	104%
Accurate 4350	38.4	3,250	39.5	3,330	40.5	3,405	41.6	3,485	42.7	3,565	61,700	98%
Vihtavuori N555	39.2	3,235	40.3	3,315	41.4	3,395	42.5	3,475	43.6	3,560	62,000	102%
Hodgdon Leverevolution	35.0	3,245	36.0	3,325	37.0	3,400	37.9	3,465	38.9	3,540	61,700	81%
Hodgdon SUPERFORMANCE	39.5	3,215	40.6	3,295	41.7	3,375	42.8	3,455	43.9	3,535	61,800	94%
Ramshot Hunter	38.8	3,220	39.9	3,300	41.0	3,380	42.0	3,450	43.1	3,535	61,700	100%
Winchester StaBALL 6.5	38.3	3,225	39.4	3,305	40.5	3,385	41.5	3,455	42.6	3,535	61,800	94%
Vihtavuori N560	41.2	3,210	42.4	3,290	43.5	3,365	44.6	3,440	45.8	3,525	59,500	105%
Alliant Reloder 16	36.5	3,200	37.5	3,270	38.5	3,340	39.6	3,420	40.6	3,490	61,700	99%
Vihtavuori N550	35.9	3,215	36.9	3,280	37.9	3,350	38.9	3,420	39.9	3,490	61,800	92%
Norma MRP	39.6	3,160	40.7	3,240	41.8	3,320	42.9	3,400	44.0	3,480	61,900	100%
Alliant Power Pro 2000-MR	35.4	3,190	36.4	3,265	37.3	3,330	38.3	3,400	39.3	3,475	61,900	90%
IMR 4831	38.2	3,160	39.3	3,240	40.3	3,320	41.4	3,400	42.4	3,475	61,900	100%
Hodgdon H4831SC	39.3	3,150	40.4	3,225	41.5	3,305	42.6	3,385	43.7	3,465	61,800	96%
Hodgdon H380	35.7	3,165	36.7	3,235	37.7	3,305	38.7	3,380	39.7	3,450	61,700	92%
IMR 7828SSC	39.6	3,125	40.7	3,205	41.8	3,285	42.9	3,365	44.0	3,445	61,800	100%
IMR 7828	40.4	3,105	41.5	3,180	42.6	3,260	43.8	3,350	44.9	3,430	62,000	99%
Vihtavuori N165	40.1	3,105	41.2	3,180	42.4	3,260	43.5	3,340	44.6	3,415	60,500	105%
Shooters World SW4350	38.4	3,090	39.5	3,170	40.5	3,240	41.6	3,320	42.7	3,395	62,000	101%

75 gr Bullet · 25" barrel

COAL: 2.490" • Bullet length: 1.049" • Seat depth: 0.479" • Usable capacity: 45.0 / 49.5 gr H_2O

Powder	STEP 1 · 90%		STEP 2		STEP 3		STEP 4		STEP 5 · LIMIT			
	gr	fps	gr	fps	gr	fps	gr	fps	gr	fps	psi	Fill
Alliant Reloder 26	40.6	3,155	41.7	3,230	42.9	3,315	44.0	3,395	45.1	3,475	61,800	101%
Alliant Reloder 23	38.3	3,145	39.4	3,220	40.5	3,300	41.5	3,370	42.6	3,450	61,700	103%
Accurate 4350	37.4	3,140	38.5	3,215	39.5	3,290	40.5	3,360	41.6	3,440	61,800	97%
Vihtavuori N560	40.4	3,130	41.5	3,200	42.6	3,275	43.8	3,355	44.9	3,435	61,600	104%
Vihtavuori N555	37.9	3,125	39.0	3,205	40.0	3,275	41.0	3,350	42.1	3,425	61,700	100%
Hodgdon SUPERFORMANCE	38.5	3,110	39.6	3,190	40.6	3,260	41.7	3,340	42.8	3,420	61,900	93%
Ramshot Hunter	37.8	3,110	38.8	3,180	39.9	3,255	41.0	3,335	42.0	3,405	61,700	99%
Winchester StaBALL 6.5	37.3	3,110	38.3	3,175	39.3	3,245	40.4	3,325	41.4	3,395	61,700	93%
Alliant Reloder 19	38.2	3,060	39.3	3,140	40.3	3,215	41.4	3,295	42.4	3,370	61,900	100%
Norma MRP	38.5	3,055	39.6	3,130	40.6	3,200	41.7	3,280	42.8	3,360	61,700	99%
Alliant Power Pro 4000-MR	37.6	3,055	38.6	3,125	39.7	3,205	40.8	3,280	41.8	3,355	61,900	95%
Alliant Reloder 17	34.9	3,060	35.9	3,135	36.8	3,200	37.8	3,275	38.8	3,350	61,900	86%
Hodgdon H4831SC	38.3	3,045	39.4	3,125	40.5	3,200	41.5	3,275	42.6	3,350	61,700	95%
Accurate 2700	36.0	3,060	37.0	3,130	38.0	3,200	39.0	3,270	40.0	3,345	61,600	91%
IMR 7828SSC	38.5	3,035	39.6	3,110	40.6	3,180	41.7	3,260	42.8	3,340	61,900	99%
Hodgdon H414	35.8	3,045	36.8	3,115	37.8	3,190	38.8	3,260	39.8	3,330	61,700	90%
Winchester 760	35.8	3,045	36.8	3,115	37.8	3,185	38.8	3,255	39.8	3,330	61,800	91%
Vihtavuori N165	39.3	3,025	40.4	3,095	41.5	3,170	42.6	3,245	43.7	3,325	61,900	104%
Winchester Supreme 780	40.9	2,995	42.0	3,075	43.1	3,150	44.3	3,235	45.4	3,315	61,800	101%
Hodgdon H380	34.7	3,040	35.7	3,110	36.6	3,175	37.5	3,235	38.5	3,305	61,800	91%

80 gr Bullet · 25" barrel

COAL: 2.495" • Bullet length: 1.078" • Seat depth: 0.503" • Usable capacity: 44.7 / 49.5 gr H_2O

Powder	STEP 1 · 90%		STEP 2		STEP 3		STEP 4		STEP 5 · LIMIT			
	gr	fps	gr	fps	gr	fps	gr	fps	gr	fps	psi	Fill
Alliant Reloder 26	39.9	3,080	41.0	3,155	42.1	3,235	43.2	3,310	44.3	3,390	61,600	99%
Alliant Reloder 23	37.7	3,065	38.8	3,140	39.8	3,210	40.9	3,290	41.9	3,360	61,900	102%
Accurate 4350	36.7	3,055	37.7	3,125	38.8	3,200	39.8	3,270	40.8	3,340	61,700	95%
Hodgdon SUPERFORMANCE	37.9	3,040	39.0	3,115	40.0	3,185	41.0	3,255	42.1	3,335	62,000	92%
Vihtavuori N560	39.5	3,040	40.6	3,115	41.7	3,185	42.8	3,260	43.9	3,335	61,800	103%
Vihtavuori N555	37.0	3,045	38.0	3,110	39.0	3,180	40.1	3,260	41.1	3,330	61,800	99%
Accurate MagPro	41.4	3,000	42.5	3,075	43.7	3,160	44.9	3,245	46.0	3,325	61,900	105%
Ramshot Hunter	37.2	3,030	38.2	3,100	39.3	3,175	40.3	3,245	41.3	3,315	61,800	98%
Ramshot Magnum	42.1	2,975	43.3	3,055	44.5	3,135	45.6	3,210	46.8	3,295	59,600	105%
Winchester StaBALL 6.5	36.5	3,010	37.5	3,080	38.5	3,145	39.6	3,225	40.6	3,290	61,600	92%
Ramshot Grand	41.5	2,965	42.6	3,040	43.8	3,125	45.0	3,210	46.1	3,285	59,100	105%
Hodgdon H4831SC	37.7	2,975	38.8	3,055	39.8	3,120	40.9	3,200	41.9	3,270	61,700	94%
IMR 7828SSC	37.7	2,955	38.8	3,030	39.8	3,100	40.9	3,180	41.9	3,250	61,700	97%
Winchester Supreme 780	40.2	2,940	41.3	3,015	42.5	3,100	43.6	3,175	44.7	3,250	61,900	101%
IMR 7828	38.4	2,940	39.5	3,015	40.5	3,085	41.6	3,160	42.7	3,240	61,600	96%
Vihtavuori N165	38.5	2,945	39.6	3,015	40.6	3,080	41.7	3,155	42.8	3,230	61,800	103%
IMR 4007 SSC	34.5	2,945	35.5	3,015	36.4	3,080	37.3	3,145	38.3	3,215	62,000	92%
IMR 4451	35.0	2,930	36.0	3,000	37.0	3,070	37.9	3,135	38.9	3,205	61,700	90%
Vihtavuori N170	40.6	2,925	41.7	2,990	42.9	3,065	44.0	3,135	45.1	3,205	59,500	105%
Shooters World SW4350	36.8	2,910	37.8	2,980	38.8	3,050	39.9	3,125	40.9	3,190	61,800	99%

90 gr Bullet · 25" barrel

COAL: 2.600" • Bullet length: 1.235" • Seat depth: 0.555" • Usable capacity: 44.2 / 49.5 gr H_2O

Powder	STEP 1 · 90%		STEP 2		STEP 3		STEP 4		STEP 5 · LIMIT			
	gr	fps	gr	fps	gr	fps	gr	fps	gr	fps	psi	Fill
Alliant Reloder 26	38.6	2,940	39.7	3,010	40.8	3,085	41.8	3,155	42.9	3,230	61,700	97%
Vihtavuori N570	40.6	2,910	41.7	2,980	42.9	3,060	44.0	3,135	45.1	3,210	61,400	105%
Ramshot Magnum	41.5	2,895	42.6	2,970	43.8	3,050	45.0	3,130	46.1	3,205	61,900	105%
Ramshot Grand	41.0	2,890	42.1	2,960	43.3	3,040	44.5	3,120	45.6	3,195	61,900	105%
Accurate MagPro	40.3	2,885	41.4	2,960	42.5	3,030	43.7	3,115	44.8	3,190	61,900	103%
Vihtavuori N565	39.4	2,890	40.5	2,965	41.6	3,035	42.7	3,110	43.8	3,185	61,700	104%
Alliant Reloder 23	36.4	2,905	37.4	2,975	38.4	3,040	39.4	3,110	40.4	3,175	61,800	99%
Alliant Reloder 22	36.9	2,880	37.9	2,945	39.0	3,020	40.0	3,090	41.0	3,155	61,900	98%
Reload Swiss RS76	40.7	2,855	41.8	2,925	43.0	3,005	44.1	3,075	45.2	3,150	61,800	103%
Alliant Reloder 19	36.4	2,860	37.4	2,930	38.4	3,000	39.4	3,070	40.4	3,140	61,800	97%
Vihtavuori N560	37.7	2,865	38.8	2,935	39.8	3,000	40.9	3,070	41.9	3,135	61,800	99%
Hodgdon H1000	38.5	2,835	39.6	2,910	40.6	2,975	41.7	3,050	42.8	3,125	61,300	105%
Hodgdon H4831SC	36.5	2,835	37.5	2,900	38.5	2,970	39.6	3,040	40.6	3,110	61,900	92%
Norma MRP	36.6	2,840	37.6	2,905	38.7	2,975	39.7	3,045	40.7	3,110	62,000	96%
Alliant Power Pro 4000-MR	35.7	2,825	36.7	2,890	37.7	2,960	38.7	3,025	39.7	3,095	61,700	91%
IMR 7828	37.1	2,815	38.1	2,880	39.2	2,955	40.2	3,020	41.2	3,090	62,000	94%
IMR 7828SSC	36.4	2,820	37.4	2,885	38.4	2,955	39.4	3,020	40.4	3,085	62,000	95%
IMR 8133	40.1	2,785	41.2	2,855	42.4	2,935	43.5	3,010	44.6	3,085	60,200	105%
Vihtavuori N170	39.5	2,795	40.6	2,860	41.7	2,925	42.8	2,995	43.9	3,060	61,800	103%
Vihtavuori N165	37.0	2,790	38.0	2,850	39.0	2,915	40.1	2,985	41.1	3,055	61,800	100%

.22 Hornet

The .22 Hornet grew out of experiments at Springfield Armory in the 1920s. Townsend Whelen and G. L. Wotkyns are credited with developing a high-velocity load there. They based it on the old black-powder .22 Winchester Center Fire (.22 WCF) case. The rimmed and bottlenecked wildcat attracted enough interest that Winchester adopted it as a factory cartridge in 1930. The first commercial rifles appeared in 1932. Among them was the Winchester Model 54.

Factory ammunition generally uses bullets of 34 to 55 grains at about 2,500 to 3,100 fps. During World War II the U.S. military issued survival rifles in .22 Hornet to aircrews. The cartridge is used for varmints and small game. Shooters value its mild report and light recoil. Unlike rimfire alternatives it can be reloaded. The Hornet has been in continuous production for nearly a century. Rifles and ammunition are still widely available.

Cartridge specifications	
Bullet Diameter	**0.224" (5.69 mm)**
Max Case Length	**1.403" (35.64 mm)**
Case Trim Length	**1.393" (35.39 mm)**
Max COAL	**1.723" (43.76 mm)**
Primer Pocket	**Small Rifle**
Standard Twist	**1:16"**
Case Capacity	**14.8 gr H_2O**
Max Pressure	**49,000 psi (SAAMI)**

40 gr Bullet · 25" barrel

COAL: 1.720" • Bullet length: 0.641" • Seat depth: 0.324" • Usable capacity: 11.8 / 14.8 gr H_2O

Powder	STEP 1 · 90%		STEP 2		STEP 3		STEP 4		STEP 5 · LIMIT			
	gr	fps	gr	fps	gr	fps	gr	fps	gr	fps	psi	Fill
Norma R123	8.6	2,695	8.8	2,750	9.1	2,825	9.3	2,875	9.6	2,950	48,100	88%
Vihtavuori N105	8.1	2,655	8.3	2,705	8.6	2,785	8.8	2,835	9.0	2,885	49,000	84%
Accurate No. 11FS	10.0	2,585	10.3	2,655	10.6	2,725	10.8	2,770	11.1	2,840	48,100	95%
Accurate 4100	9.3	2,575	9.6	2,645	9.8	2,690	10.1	2,760	10.3	2,805	48,700	92%
Hodgdon H110	9.6	2,550	9.9	2,620	10.1	2,665	10.4	2,735	10.7	2,805	48,900	93%
Accurate No. 9	9.0	2,505	9.3	2,580	9.5	2,635	9.8	2,710	10.0	2,760	48,900	87%
Vihtavuori N110	8.9	2,520	9.2	2,595	9.4	2,645	9.7	2,715	9.9	2,760	48,100	98%
Alliant 2400	9.2	2,515	9.4	2,565	9.7	2,635	9.9	2,680	10.2	2,750	48,900	95%
Shooters World Blackout	10.9	2,430	11.2	2,490	11.5	2,550	11.8	2,615	12.1	2,675	46,400	104%
Reload Swiss RS30	9.1	2,320	9.3	2,365	9.6	2,435	9.8	2,480	10.1	2,545	47,000	104%
Hodgdon H4227	8.9	2,260	9.2	2,330	9.4	2,375	9.7	2,445	9.9	2,490	48,800	96%
Accurate 5744	9.5	2,030	9.8	2,095	10.1	2,160	10.3	2,205	10.6	2,270	45,900	104%

50 gr Bullet · 25" barrel

COAL: 1.720" • Bullet length: 0.670" • Seat depth: 0.353" • Usable capacity: 11.6 / 14.8 gr H_2O

Powder	STEP 1 · 90%		STEP 2		STEP 3		STEP 4		STEP 5 · LIMIT			
	gr	fps	gr	fps	gr	fps	gr	fps	gr	fps	psi	Fill
Norma R123	8.0	2,385	8.2	2,435	8.4	2,480	8.7	2,555	8.9	2,600	48,400	83%
Shooters World SBR-SOCOM	10.4	2,355	10.7	2,415	11.0	2,480	11.3	2,540	11.6	2,600	48,100	103%
Alliant Power Pro 300-MP	9.7	2,360	10.0	2,425	10.3	2,490	10.5	2,530	10.8	2,595	48,500	103%
Accurate No. 11FS	9.4	2,360	9.7	2,430	9.9	2,470	10.2	2,535	10.4	2,580	48,400	91%
Accurate No. 9	8.4	2,290	8.6	2,340	8.9	2,415	9.1	2,465	9.3	2,515	48,500	83%
Hodgdon H110	8.9	2,270	9.2	2,340	9.4	2,385	9.7	2,450	9.9	2,490	48,000	88%
Accurate 4100	8.6	2,255	8.8	2,300	9.1	2,370	9.3	2,410	9.6	2,475	48,700	87%
Shooters World Blackout	10.4	2,240	10.7	2,300	11.0	2,360	11.3	2,420	11.6	2,475	48,500	102%
Vihtavuori N110	8.3	2,255	8.5	2,300	8.8	2,365	9.0	2,410	9.2	2,455	48,100	93%
Alliant 2400	8.6	2,250	8.8	2,295	9.1	2,365	9.3	2,410	9.5	2,450	48,700	90%
IMR 4227	9.5	2,170	9.8	2,235	10.1	2,295	10.3	2,335	10.6	2,395	48,900	104%
Hodgdon H4227	8.3	2,035	8.5	2,080	8.8	2,145	9.0	2,190	9.2	2,230	48,800	91%

55 gr Bullet · 25" barrel

COAL: 1.720" • Bullet length: 0.719" • Seat depth: 0.402" • Usable capacity: 11.2 / 14.8 gr H_2O

Powder	STEP 1 · 90%		STEP 2		STEP 3		STEP 4		STEP 5 · LIMIT			
	gr	fps	gr	fps	gr	fps	gr	fps	gr	fps	psi	Fill
Shooters World SBR-SOCOM	10.0	2,240	10.3	2,300	10.6	2,360	10.8	2,400	11.1	2,465	48,300	102%
Alliant Power Pro 300-MP	9.3	2,235	9.6	2,295	9.8	2,340	10.1	2,400	10.3	2,440	48,400	102%
Accurate No. 11FS	8.9	2,210	9.2	2,280	9.4	2,320	9.7	2,385	9.9	2,425	48,300	89%
Norma R123	7.6	2,225	7.8	2,275	8.0	2,320	8.2	2,370	8.4	2,415	47,900	82%
Accurate No. 9	8.0	2,160	8.2	2,215	8.4	2,265	8.7	2,335	8.9	2,385	48,900	82%
Hodgdon H110	8.6	2,155	8.8	2,200	9.1	2,265	9.3	2,310	9.5	2,350	48,800	88%
Vihtavuori N110	7.9	2,110	8.1	2,155	8.4	2,220	8.6	2,265	8.8	2,310	48,800	93%
Accurate 4100	8.2	2,110	8.4	2,155	8.6	2,195	8.9	2,260	9.1	2,305	48,300	86%
Alliant 2400	8.1	2,090	8.3	2,135	8.6	2,200	8.8	2,245	9.0	2,285	48,200	89%
IMR 4227	9.0	2,030	9.3	2,095	9.5	2,135	9.8	2,195	10.0	2,235	48,100	102%
Hodgdon H4227	7.8	1,885	8.0	1,930	8.3	1,995	8.5	2,035	8.7	2,080	48,200	89%
Alliant Reloder 7	9.9	1,825	10.2	1,885	10.4	1,920	10.7	1,980	11.0	2,035	46,100	105%
Accurate 5744	8.7	1,820	8.9	1,865	9.2	1,925	9.4	1,970	9.7	2,030	48,000	101%

22 Nosler

Nosler introduced the 22 Nosler at the 2017 SHOT Show. It is a high-velocity .22-caliber cartridge for AR-15-type rifles. The case is new rather than formed from an existing cartridge. Its rebated rim fits the standard AR-15 (.223 Remington/5.56mm) bolt face. Its larger body diameter and taper resemble those of the 6.8mm Remington SPC. Nosler therefore recommends 6.8 SPC magazines. Converting a rifle requires a new barrel. The case has a 30-degree shoulder. SAAMI has standardized the cartridge.

Nosler's 55-grain factory load is rated at about 3,350 fps from an 18-inch barrel. A 77-grain match bullet reaches about 2,950 fps from the same barrel length and about 3,100 fps from a 24-inch test barrel. That performance places the cartridge between the .223 Remington and the .22-250 Remington. The 22 Nosler is used mainly for varmint and predator hunting and for longer-range target shooting with semiautomatic rifles. Nosler supplies ammunition and brass. CMMG and other firms have offered rifles in the chambering.

Cartridge specifications	
Bullet Diameter	**0.224" (5.69 mm)**
Max Case Length	**1.760" (44.70 mm)**
Case Trim Length	**1.750" (44.45 mm)**
Max COAL	**2.260" (57.40 mm)**
Primer Pocket	**Small Rifle**
Standard Twist	**1:8"**
Case Capacity	**36.6 gr H_2O**
Max Pressure	**55,000 psi (SAAMI)**

35 gr Bullet · 25" barrel

COAL: 2.248" • Bullet length: 0.712" • Seat depth: 0.224" • Usable capacity: 34.5 / 36.6 gr H_2O

Powder	STEP 1 · 90%		STEP 2		STEP 3		STEP 4		STEP 5 · LIMIT			
	gr	fps	gr	fps	gr	fps	gr	fps	gr	fps	psi	Fill
Hodgdon CFE BLK	27.2	4,040	27.9	4,115	28.7	4,205	29.4	4,285	30.2	4,375	54,700	90%
Alliant AR-Comp	29.7	3,910	30.5	3,995	31.4	4,090	32.2	4,180	33.0	4,265	54,600	102%
Vihtavuori N130	27.0	3,850	27.8	3,940	28.5	4,025	29.3	4,115	30.0	4,195	54,900	100%
Accurate 2230	30.2	3,840	31.1	3,930	31.9	4,015	32.8	4,105	33.6	4,190	54,800	99%
Vihtavuori N135	30.1	3,840	30.9	3,925	31.8	4,020	32.6	4,105	33.4	4,190	53,600	105%
Hodgdon Leverevolution	32.9	3,790	33.8	3,885	34.7	3,980	35.6	4,075	36.5	4,175	54,900	101%
Reload Swiss RS40	28.4	3,805	29.2	3,895	30.0	3,985	30.8	4,075	31.6	4,165	54,700	97%
Vihtavuori N530	30.2	3,775	31.1	3,875	31.9	3,965	32.8	4,065	33.6	4,155	54,900	104%
Ramshot X-Terminator	29.8	3,810	30.6	3,890	31.5	3,985	32.3	4,065	33.1	4,150	54,800	97%
Shooters World The Patriot	28.9	3,770	29.7	3,855	30.5	3,945	31.3	4,030	32.1	4,115	54,600	97%
Ramshot TAC	29.8	3,740	30.6	3,830	31.5	3,925	32.3	4,010	33.1	4,100	54,700	102%
Accurate 2460	29.9	3,740	30.7	3,820	31.6	3,915	32.4	3,995	33.2	4,080	55,000	96%
Hodgdon H4895	29.8	3,715	30.6	3,800	31.5	3,900	32.3	3,990	33.1	4,075	54,800	99%
Hodgdon Benchmark	29.5	3,705	30.3	3,795	31.1	3,880	32.0	3,980	32.8	4,065	52,600	105%
IMR 4895	31.1	3,700	32.0	3,795	32.8	3,880	33.6	3,965	34.5	4,065	54,800	103%
IMR 8208 XBR	30.1	3,700	30.9	3,785	31.8	3,885	32.6	3,975	33.4	4,060	53,400	105%
Hodgdon H322	28.1	3,695	28.9	3,785	29.6	3,865	30.4	3,955	31.2	4,040	54,700	96%
IMR 3031	29.0	3,675	29.8	3,765	30.6	3,855	31.4	3,945	32.2	4,035	54,900	100%
Accurate 2520	30.6	3,660	31.5	3,755	32.3	3,840	33.1	3,925	34.0	4,020	54,700	101%
Hodgdon H335	29.1	3,640	29.9	3,725	30.7	3,810	31.5	3,900	32.3	3,985	54,600	92%

40 gr Bullet · 25" barrel

COAL: 2.100" • Bullet length: 0.681" • Seat depth: 0.341" • Usable capacity: 33.5 / 36.6 gr H_2O

Powder	STEP 1 · 90%		STEP 2		STEP 3		STEP 4		STEP 5 · LIMIT			
	gr	fps	gr	fps	gr	fps	gr	fps	gr	fps	psi	Fill
Hodgdon CFE BLK	26.1	3,820	26.8	3,895	27.6	3,985	28.3	4,060	29.0	4,140	54,700	89%
Alliant AR-Comp	28.5	3,725	29.3	3,810	30.1	3,895	30.9	3,980	31.7	4,065	54,700	101%
Vihtavuori N135	29.2	3,705	30.0	3,790	30.8	3,870	31.6	3,955	32.4	4,040	55,000	105%
Hodgdon Leverevolution	31.7	3,645	32.6	3,740	33.5	3,830	34.3	3,915	35.2	4,010	54,600	100%
Vihtavuori N530	29.0	3,650	29.8	3,735	30.6	3,825	31.4	3,910	32.2	4,000	54,800	103%
Vihtavuori N130	25.8	3,665	26.5	3,740	27.3	3,830	28.0	3,910	28.7	3,985	54,600	98%
Accurate 2230	28.9	3,655	29.7	3,735	30.5	3,815	31.3	3,895	32.1	3,980	54,600	97%
Hodgdon Benchmark	28.7	3,610	29.5	3,695	30.3	3,780	31.1	3,865	31.9	3,950	54,600	105%
Ramshot X-Terminator	28.5	3,625	29.3	3,710	30.1	3,790	30.9	3,870	31.7	3,950	55,000	96%
IMR 8208 XBR	29.2	3,600	30.0	3,685	30.8	3,770	31.6	3,855	32.4	3,945	54,900	105%
Ramshot TAC	28.8	3,595	29.6	3,675	30.4	3,760	31.2	3,845	32.0	3,930	54,900	102%
Hodgdon H4895	28.7	3,580	29.5	3,665	30.3	3,750	31.1	3,835	31.9	3,920	54,900	99%
Winchester 748	30.1	3,535	30.9	3,620	31.8	3,715	32.6	3,800	33.4	3,885	54,600	103%
Alliant Power Pro Varmint	29.1	3,540	29.9	3,625	30.7	3,710	31.5	3,795	32.3	3,880	54,700	102%
Shooters World Match Rifle	29.6	3,520	30.4	3,605	31.3	3,700	32.1	3,785	32.9	3,870	54,600	101%
Accurate 2520	29.5	3,520	30.3	3,605	31.1	3,685	32.0	3,780	32.8	3,860	54,700	101%
Hodgdon CFE 223	30.9	3,505	31.8	3,600	32.6	3,680	33.4	3,765	34.3	3,860	54,900	104%
Alliant Reloder 10x	25.5	3,515	26.2	3,595	26.9	3,675	27.6	3,755	28.3	3,830	54,800	95%
Hodgdon BL-C(2)	30.2	3,465	31.1	3,560	31.9	3,645	32.8	3,740	33.6	3,830	54,700	101%
Vihtavuori N140	30.1	3,480	30.9	3,560	31.8	3,660	32.6	3,745	33.4	3,830	54,900	102%

45 gr Bullet · 25" barrel

COAL: 2.100" • Bullet length: 0.581" • Seat depth: 0.241" • Usable capacity: 34.2 / 36.6 gr H_2O

Powder	STEP 1 · 90%		STEP 2		STEP 3		STEP 4		STEP 5 · LIMIT			
	gr	fps	gr	fps	gr	fps	gr	fps	gr	fps	psi	Fill
Hodgdon CFE BLK	25.7	3,620	26.4	3,695	27.1	3,770	27.9	3,855	28.6	3,930	54,600	86%
Hodgdon Leverevolution	31.6	3,555	32.5	3,645	33.4	3,735	34.2	3,815	35.1	3,905	54,800	98%
Alliant AR-Comp	28.1	3,570	28.9	3,650	29.6	3,720	30.4	3,800	31.2	3,880	54,700	98%
Vihtavuori N135	28.6	3,545	29.4	3,625	30.2	3,705	31.0	3,785	31.8	3,865	54,800	101%
Vihtavuori N530	28.4	3,530	29.2	3,615	29.9	3,685	30.7	3,770	31.5	3,855	55,000	99%
Norma 202	29.7	3,520	30.5	3,600	31.4	3,690	32.2	3,770	33.0	3,850	54,800	105%
Reload Swiss RS40	27.2	3,515	27.9	3,585	28.7	3,670	29.4	3,740	30.2	3,825	54,700	94%
Hodgdon Benchmark	28.3	3,490	29.1	3,570	29.9	3,650	30.6	3,720	31.4	3,805	54,600	101%
IMR 8208 XBR	28.7	3,475	29.5	3,560	30.3	3,640	31.1	3,720	31.9	3,800	54,600	101%
Vihtavuori N540	30.2	3,470	31.1	3,555	31.9	3,635	32.8	3,720	33.6	3,800	54,700	104%
IMR 4895	29.6	3,460	30.4	3,540	31.3	3,630	32.1	3,710	32.9	3,795	54,700	99%
Ramshot TAC	28.6	3,470	29.4	3,550	30.2	3,630	31.0	3,715	31.8	3,795	54,900	99%
Ramshot X-Terminator	27.9	3,460	28.7	3,540	29.4	3,610	30.2	3,685	31.0	3,765	54,900	92%
Alliant Power Pro Varmint	28.9	3,435	29.7	3,515	30.5	3,595	31.3	3,680	32.1	3,760	54,800	99%
Hodgdon CFE 223	30.7	3,420	31.6	3,510	32.4	3,590	33.3	3,680	34.1	3,760	54,700	102%
Shooters World The Patriot	27.5	3,460	28.3	3,540	29.0	3,610	29.8	3,690	30.5	3,760	54,600	93%
Accurate 2520	29.3	3,420	30.1	3,500	30.9	3,575	31.7	3,655	32.5	3,735	54,700	98%
Reload Swiss RS50	30.7	3,385	31.6	3,475	32.4	3,555	33.3	3,640	34.1	3,725	54,300	105%
Accurate 2460	28.0	3,415	28.8	3,490	29.6	3,570	30.3	3,635	31.1	3,715	54,700	91%
Alliant Reloder 10x	25.3	3,395	26.0	3,475	26.7	3,550	27.4	3,625	28.1	3,700	54,900	93%

50 gr Bullet · 25" barrel

COAL: 2.150" • Bullet length: 0.715" • Seat depth: 0.325" • Usable capacity: 33.6 / 36.6 gr H_2O

Powder	STEP 1 · 90%		STEP 2		STEP 3		STEP 4		STEP 5 · LIMIT			
	gr	fps	gr	fps	gr	fps	gr	fps	gr	fps	psi	Fill
Hodgdon Leverevolution	30.7	3,430	31.6	3,520	32.4	3,595	33.3	3,685	34.1	3,765	54,600	97%
Hodgdon CFE BLK	24.9	3,445	25.6	3,515	26.3	3,590	27.0	3,665	27.7	3,735	54,800	85%
Alliant AR-Comp	27.1	3,400	27.9	3,480	28.6	3,545	29.4	3,625	30.1	3,695	54,700	96%
Vihtavuori N530	27.3	3,390	28.1	3,470	28.8	3,540	29.6	3,620	30.3	3,695	54,900	97%
Norma 202	28.7	3,380	29.5	3,455	30.3	3,535	31.1	3,610	31.9	3,690	54,700	103%
Vihtavuori N135	27.5	3,380	28.3	3,460	29.1	3,535	29.8	3,605	30.6	3,680	54,600	99%
Reload Swiss RS40	26.4	3,370	27.1	3,440	27.9	3,520	28.6	3,590	29.3	3,660	54,700	93%
Hodgdon Benchmark	27.4	3,355	28.1	3,425	28.9	3,505	29.6	3,575	30.4	3,655	55,000	100%
IMR 8208 XBR	27.8	3,350	28.6	3,430	29.4	3,505	30.1	3,575	30.9	3,655	54,900	100%
Vihtavuori N540	29.3	3,345	30.1	3,420	30.9	3,500	31.7	3,575	32.5	3,650	54,700	103%
Hodgdon H4895	27.5	3,335	28.3	3,410	29.1	3,490	29.8	3,560	30.6	3,640	54,800	94%
Vihtavuori N133	26.3	3,335	27.0	3,405	27.8	3,480	28.5	3,550	29.2	3,620	54,600	100%
Vihtavuori N140	28.9	3,285	29.7	3,360	30.5	3,440	31.3	3,520	32.1	3,595	54,900	97%
Accurate 2520	28.4	3,285	29.2	3,365	30.0	3,440	30.8	3,515	31.6	3,590	54,900	97%
Shooters World The Patriot	26.6	3,305	27.3	3,375	28.1	3,450	28.8	3,520	29.5	3,590	54,600	91%
Hodgdon Varget	28.4	3,265	29.2	3,345	30.0	3,425	30.8	3,505	31.6	3,585	55,000	98%
IMR 4166	27.9	3,270	28.7	3,350	29.4	3,420	30.2	3,500	31.0	3,580	54,900	102%
Ramshot X-Terminator	26.8	3,295	27.6	3,370	28.3	3,435	29.1	3,515	29.8	3,580	54,600	90%
Ramshot Big Game	31.1	3,225	32.0	3,310	32.9	3,395	33.7	3,475	34.6	3,560	53,200	105%
Shooters World The Creed	29.4	3,225	30.2	3,305	31.1	3,390	31.9	3,470	32.7	3,550	54,800	101%

55 gr Bullet · 25" barrel

COAL: 2.220" • Bullet length: 0.732" • Seat depth: 0.272" • Usable capacity: 34.0 / 36.6 gr H_2O

Powder	STEP 1 · 90%		STEP 2		STEP 3		STEP 4		STEP 5 · LIMIT			
	gr	fps	gr	fps	gr	fps	gr	fps	gr	fps	psi	Fill
Hodgdon Leverevolution	30.4	3,330	31.3	3,415	32.1	3,490	32.9	3,565	33.8	3,650	54,600	95%
Alliant Reloder 15	29.7	3,300	30.5	3,375	31.4	3,460	32.2	3,535	33.0	3,610	54,700	103%
Hodgdon CFE BLK	24.5	3,285	25.2	3,355	25.9	3,425	26.5	3,485	27.2	3,555	54,700	82%
Reload Swiss RS52	29.2	3,245	30.0	3,320	30.8	3,400	31.6	3,475	32.4	3,555	54,700	100%
Winchester 748	28.9	3,240	29.7	3,315	30.5	3,390	31.3	3,470	32.1	3,545	54,800	97%
Norma 202	28.2	3,255	29.0	3,330	29.8	3,400	30.5	3,465	31.3	3,540	54,700	100%
Vihtavuori N530	26.6	3,260	27.3	3,325	28.1	3,405	28.8	3,470	29.5	3,540	54,700	93%
Alliant Power Pro 2000-MR	30.6	3,220	31.5	3,300	32.3	3,375	33.1	3,450	34.0	3,535	54,700	105%
Alliant AR-Comp	26.6	3,255	27.3	3,320	28.1	3,395	28.8	3,460	29.5	3,530	54,600	93%
Ramshot TAC	27.5	3,220	28.3	3,295	29.1	3,375	29.8	3,440	30.6	3,515	54,900	96%
Hodgdon BL-C(2)	29.2	3,205	30.0	3,280	30.8	3,360	31.6	3,435	32.4	3,510	54,600	95%
Hodgdon H4895	27.2	3,225	27.9	3,290	28.7	3,370	29.4	3,435	30.2	3,510	54,800	92%
Ramshot Big Game	31.2	3,185	32.1	3,265	33.0	3,345	33.8	3,420	34.7	3,505	54,800	104%
Vihtavuori N540	28.6	3,215	29.4	3,285	30.2	3,360	31.0	3,430	31.8	3,505	54,800	99%
Hodgdon Varget	28.1	3,180	28.9	3,255	29.6	3,325	30.4	3,400	31.2	3,480	54,700	95%
Vihtavuori N133	25.8	3,195	26.5	3,260	27.3	3,335	28.0	3,405	28.7	3,470	54,800	97%
Accurate 2520	28.0	3,175	28.8	3,245	29.6	3,320	30.3	3,385	31.1	3,460	54,700	94%
Shooters World Precision Rifle	28.5	3,145	29.3	3,220	30.1	3,295	30.9	3,375	31.7	3,450	54,800	103%
Hodgdon H335	26.7	3,140	27.4	3,205	28.2	3,280	28.9	3,350	29.7	3,425	54,800	86%
Hodgdon H414	31.4	3,100	32.3	3,180	33.1	3,255	34.0	3,335	34.9	3,420	54,700	104%

60 gr Bullet · 25" barrel

COAL: 2.260" • Bullet length: 0.858" • Seat depth: 0.358" • Usable capacity: 33.2 / 36.6 gr H_2O

Powder	STEP 1 · 90%		STEP 2		STEP 3		STEP 4		STEP 5 · LIMIT			
	gr	fps	gr	fps	gr	fps	gr	fps	gr	fps	psi	Fill
Hodgdon Leverevolution	29.5	3,210	30.3	3,285	31.1	3,355	32.0	3,440	32.8	3,515	54,900	94%
Alliant Reloder 15	28.6	3,170	29.4	3,240	30.2	3,315	31.0	3,390	31.8	3,465	54,700	102%
Reload Swiss RS52	28.3	3,125	29.1	3,200	29.9	3,275	30.6	3,345	31.4	3,420	54,700	99%
Winchester 748	28.0	3,120	28.8	3,195	29.6	3,265	30.3	3,335	31.1	3,410	54,900	96%
Hodgdon CFE 223	28.7	3,100	29.5	3,170	30.3	3,245	31.1	3,320	31.9	3,395	55,000	98%
Norma 201	26.8	3,090	27.6	3,170	28.3	3,240	29.1	3,320	29.8	3,390	54,900	99%
IMR 4064	27.5	3,100	28.3	3,175	29.1	3,250	29.8	3,310	30.6	3,385	54,700	98%
Shooters World Match Rifle	27.5	3,085	28.3	3,160	29.1	3,235	29.8	3,300	30.6	3,380	54,700	95%
IMR 8208 XBR	26.3	3,090	27.0	3,155	27.8	3,230	28.5	3,295	29.2	3,360	54,700	95%
Reload Swiss RS50	28.8	3,065	29.6	3,140	30.4	3,210	31.2	3,285	32.0	3,360	54,700	101%
Hodgdon H4895	26.2	3,085	26.9	3,150	27.6	3,215	28.4	3,290	29.1	3,355	54,600	91%
Vihtavuori N135	25.9	3,090	26.6	3,155	27.4	3,230	28.1	3,295	28.8	3,355	54,900	94%
Hodgdon Varget	27.2	3,065	27.9	3,130	28.7	3,205	29.4	3,270	30.2	3,350	54,800	94%
Vihtavuori N540	27.5	3,070	28.3	3,145	29.1	3,215	29.8	3,280	30.6	3,350	54,900	98%
IMR 4166	26.7	3,045	27.4	3,110	28.2	3,185	28.9	3,250	29.7	3,330	54,700	99%
Accurate 2520	27.1	3,045	27.9	3,115	28.6	3,180	29.4	3,250	30.1	3,315	54,900	93%
Hodgdon H414	30.5	3,000	31.4	3,085	32.2	3,155	33.0	3,230	33.9	3,315	54,900	104%
Accurate 2495	25.9	3,000	26.6	3,065	27.4	3,145	28.1	3,210	28.8	3,275	54,600	87%
Hodgdon H335	25.8	3,000	26.5	3,070	27.3	3,145	28.0	3,210	28.7	3,275	54,800	85%
Accurate 4064	27.0	2,985	27.8	3,060	28.5	3,125	29.3	3,200	30.0	3,265	54,900	100%

64 gr Bullet · 25" barrel

COAL: 2.175" • Bullet length: 0.808" • Seat depth: 0.394" • Usable capacity: 32.9 / 36.6 gr H_2O

Powder	STEP 1 · 90%		STEP 2		STEP 3		STEP 4		STEP 5 · LIMIT			
	gr	fps	gr	fps	gr	fps	gr	fps	gr	fps	psi	Fill
Hodgdon Leverevolution	29.0	3,135	29.8	3,205	30.6	3,280	31.4	3,355	32.2	3,425	54,900	94%
Alliant Reloder 15	28.0	3,085	28.8	3,160	29.6	3,230	30.3	3,295	31.1	3,370	54,900	101%
Alliant Power Pro 2000-MR	29.2	3,040	30.0	3,110	30.8	3,185	31.6	3,255	32.4	3,330	54,800	104%
Reload Swiss RS52	27.7	3,040	28.5	3,115	29.3	3,190	30.0	3,255	30.8	3,330	54,600	98%
Winchester 748	27.5	3,045	28.3	3,115	29.0	3,180	29.8	3,255	30.5	3,320	54,800	95%
Hodgdon H4350	30.4	3,000	31.3	3,085	32.1	3,155	32.9	3,230	33.8	3,315	54,800	104%
Vihtavuori N550	29.5	3,025	30.3	3,095	31.1	3,165	32.0	3,240	32.8	3,310	53,500	105%
Hodgdon CFE 223	28.2	3,025	29.0	3,100	29.8	3,170	30.5	3,235	31.3	3,305	55,000	97%
Hodgdon BL-C(2)	27.8	3,015	28.6	3,085	29.4	3,160	30.1	3,225	30.9	3,300	54,700	94%
Accurate 2700	30.2	2,980	31.1	3,060	31.9	3,135	32.8	3,215	33.6	3,290	54,700	104%
Hodgdon H380	29.3	2,990	30.1	3,060	30.9	3,135	31.7	3,205	32.5	3,280	54,400	105%
Norma 202	26.5	3,015	27.2	3,080	27.9	3,140	28.7	3,215	29.4	3,275	54,600	97%
Hodgdon Varget	26.6	2,985	27.4	3,060	28.1	3,125	28.9	3,200	29.6	3,265	54,900	94%
Hodgdon H4895	25.7	3,005	26.4	3,070	27.1	3,130	27.8	3,195	28.5	3,260	54,800	90%
Alliant Power Pro Varmint	26.3	2,985	27.0	3,050	27.8	3,125	28.5	3,185	29.2	3,250	54,800	94%
Vihtavuori N540	26.8	2,980	27.6	3,050	28.3	3,110	29.1	3,180	29.8	3,245	54,800	96%
Vihtavuori N140	26.8	2,965	27.6	3,040	28.3	3,100	29.1	3,175	29.8	3,240	54,600	92%
IMR 4166	26.2	2,965	26.9	3,030	27.6	3,095	28.4	3,170	29.1	3,235	54,600	98%
Shooters World Precision Rifle	27.0	2,955	27.8	3,025	28.5	3,090	29.3	3,165	30.0	3,230	54,600	101%
Accurate 4064	26.4	2,910	27.1	2,975	27.9	3,045	28.6	3,110	29.3	3,175	54,600	99%

69 gr Bullet · 25" barrel

COAL: 2.260" • Bullet length: 0.949" • Seat depth: 0.449" • Usable capacity: 32.4 / 36.6 gr H_2O

Powder	STEP 1 · 90%		STEP 2		STEP 3		STEP 4		STEP 5 · LIMIT			
	gr	fps	gr	fps	gr	fps	gr	fps	gr	fps	psi	Fill
Hodgdon Leverevolution	28.2	3,020	29.0	3,090	29.8	3,165	30.5	3,225	31.3	3,300	54,700	92%
Alliant Reloder 15	27.1	2,965	27.9	3,040	28.6	3,100	29.4	3,170	30.1	3,235	54,900	99%
Alliant Power Pro 2000-MR	28.4	2,935	29.2	3,005	30.0	3,075	30.8	3,150	31.6	3,220	54,900	103%
Hodgdon H4350	29.6	2,920	30.4	2,995	31.3	3,075	32.1	3,150	32.9	3,220	54,900	103%
Reload Swiss RS52	27.1	2,945	27.9	3,020	28.6	3,085	29.4	3,160	30.1	3,220	55,000	98%
Vihtavuori N550	28.8	2,935	29.6	3,005	30.4	3,070	31.2	3,140	32.0	3,210	54,600	104%
Winchester 748	26.7	2,930	27.4	2,990	28.2	3,065	28.9	3,130	29.7	3,200	54,800	94%
Ramshot Big Game	29.0	2,910	29.8	2,980	30.6	3,050	31.4	3,120	32.2	3,190	54,700	101%
Hodgdon CFE 223	27.4	2,915	28.1	2,975	28.9	3,045	29.6	3,110	30.4	3,180	54,700	96%
Hodgdon H380	28.5	2,890	29.3	2,960	30.1	3,030	30.9	3,105	31.7	3,175	54,600	104%
IMR 4064	26.1	2,910	26.8	2,970	27.6	3,045	28.3	3,105	29.0	3,170	54,900	96%
Reload Swiss RS50	27.5	2,880	28.3	2,950	29.1	3,020	29.8	3,080	30.6	3,155	54,600	99%
Hodgdon Varget	25.8	2,870	26.5	2,935	27.3	3,010	28.0	3,075	28.7	3,140	54,600	92%
Ramshot TAC	25.4	2,885	26.1	2,950	26.8	3,010	27.5	3,075	28.2	3,140	54,600	93%
Shooters World The Creed	26.9	2,865	27.6	2,930	28.4	3,000	29.1	3,065	29.9	3,140	54,900	96%
Winchester 760	29.1	2,850	29.9	2,920	30.7	2,990	31.5	3,060	32.3	3,130	54,900	103%
IMR 4166	25.6	2,865	26.3	2,930	27.0	2,995	27.7	3,060	28.4	3,125	54,900	97%
Norma 203B	26.1	2,860	26.8	2,925	27.6	3,000	28.3	3,060	29.0	3,125	54,900	97%
Vihtavuori N540	25.9	2,855	26.6	2,915	27.4	2,985	28.1	3,045	28.8	3,105	54,900	95%
Accurate 2520	25.7	2,835	26.4	2,895	27.1	2,960	27.8	3,020	28.5	3,080	54,600	91%

77 gr Bullet · 25" barrel

COAL: 2.260" • Bullet length: 1.055" • Seat depth: 0.555" • Usable capacity: 31.5 / 36.6 gr H_2O

Powder	STEP 1 · 90%		STEP 2		STEP 3		STEP 4		STEP 5 · LIMIT			
	gr	fps	gr	fps	gr	fps	gr	fps	gr	fps	psi	Fill
Hodgdon Leverevolution	27.0	2,855	27.8	2,925	28.5	2,985	29.3	3,055	30.0	3,120	54,800	91%
Hodgdon H4350	28.3	2,790	29.1	2,860	29.9	2,930	30.6	2,990	31.4	3,065	54,600	101%
Winchester StaBALL Match	26.5	2,800	27.2	2,860	27.9	2,920	28.7	2,990	29.4	3,055	53,300	105%
Alliant Power Pro 2000-MR	27.3	2,785	28.1	2,855	28.8	2,920	29.6	2,990	30.3	3,050	54,800	101%
Alliant Reloder 15	25.7	2,785	26.4	2,850	27.1	2,910	27.9	2,980	28.6	3,040	54,800	97%
Reload Swiss RS52	25.9	2,780	26.6	2,845	27.4	2,915	28.1	2,980	28.8	3,040	54,700	96%
Accurate 2700	28.4	2,760	29.2	2,825	30.0	2,895	30.8	2,965	31.6	3,035	55,000	102%
Ramshot Big Game	27.8	2,760	28.6	2,830	29.4	2,895	30.1	2,955	30.9	3,025	54,700	100%
Vihtavuori N550	27.4	2,775	28.1	2,830	28.9	2,895	29.6	2,955	30.4	3,025	55,000	102%
Hodgdon H380	27.4	2,750	28.1	2,815	28.9	2,880	29.6	2,945	30.4	3,015	54,800	103%
Hodgdon SUPERFORMANCE	30.2	2,725	31.0	2,795	31.9	2,875	32.7	2,945	33.5	3,015	54,600	104%
Hodgdon CFE 223	26.2	2,750	26.9	2,810	27.6	2,870	28.4	2,940	29.1	3,000	54,700	94%
Vihtavuori N150	25.5	2,745	26.2	2,805	26.9	2,870	27.6	2,930	28.3	2,990	54,600	101%
IMR 4064	24.8	2,735	25.5	2,795	26.2	2,860	26.9	2,920	27.6	2,980	55,000	94%
Alliant Power Pro 4000-MR	29.1	2,685	29.9	2,755	30.7	2,825	31.5	2,890	32.3	2,960	55,000	105%
Hodgdon Varget	24.7	2,715	25.4	2,780	26.0	2,835	26.7	2,895	27.4	2,960	54,600	91%
IMR 4166	24.5	2,705	25.2	2,765	25.9	2,830	26.5	2,880	27.2	2,945	55,000	96%
Shooters World Precision Rifle	25.1	2,695	25.8	2,755	26.5	2,820	27.2	2,880	27.9	2,945	54,800	98%
IMR 8208 XBR	23.7	2,705	24.4	2,765	25.0	2,820	25.6	2,875	26.3	2,935	54,900	91%
Vihtavuori N540	24.5	2,670	25.2	2,730	25.9	2,790	26.5	2,840	27.2	2,900	54,600	92%

85 gr Bullet · 25" barrel

COAL: 2.260" • Bullet length: 1.113" • Seat depth: 0.613" • Usable capacity: 31.0 / 36.6 gr H_2O

Powder	STEP 1 · 90%		STEP 2		STEP 3		STEP 4		STEP 5 · LIMIT			
	gr	fps	gr	fps	gr	fps	gr	fps	gr	fps	psi	Fill
Winchester StaBALL 6.5	29.0	2,705	29.8	2,775	30.6	2,840	31.4	2,905	32.2	2,975	52,500	105%
Hodgdon Leverevolution	26.1	2,715	26.8	2,775	27.6	2,845	28.3	2,905	29.0	2,965	54,800	89%
Hodgdon H4350	27.3	2,670	28.1	2,740	28.8	2,800	29.6	2,870	30.3	2,930	54,700	99%
Winchester StaBALL Match	25.9	2,680	26.6	2,740	27.4	2,810	28.1	2,870	28.8	2,930	55,000	104%
Hodgdon SUPERFORMANCE	29.3	2,630	30.1	2,700	31.0	2,775	31.8	2,845	32.6	2,910	54,700	103%
Accurate 4350	28.0	2,640	28.8	2,710	29.6	2,780	30.3	2,835	31.1	2,905	52,900	105%
Alliant Power Pro 2000-MR	26.4	2,655	27.1	2,715	27.9	2,785	28.6	2,845	29.3	2,905	54,700	99%
Hodgdon H414	27.3	2,620	28.1	2,685	28.8	2,745	29.6	2,815	30.3	2,875	54,800	100%
Alliant Reloder 15	24.7	2,640	25.4	2,700	26.0	2,750	26.7	2,810	27.4	2,870	54,700	94%
Reload Swiss RS60	27.0	2,610	27.8	2,680	28.5	2,740	29.3	2,810	30.0	2,870	54,700	100%
Alliant Reloder 17	26.3	2,600	27.0	2,665	27.8	2,735	28.5	2,795	29.2	2,860	54,800	95%
Winchester 760	27.1	2,605	27.9	2,670	28.6	2,730	29.4	2,795	30.1	2,855	54,900	100%
Hodgdon CFE 223	25.3	2,610	26.0	2,670	26.7	2,730	27.4	2,790	28.1	2,850	54,800	92%
Vihtavuori N550	26.1	2,615	26.8	2,675	27.6	2,735	28.3	2,795	29.0	2,850	54,800	98%
Alliant Power Pro 4000-MR	28.2	2,580	29.0	2,645	29.8	2,715	30.5	2,770	31.3	2,840	54,600	103%
IMR 4955	28.3	2,570	29.1	2,635	29.9	2,705	30.6	2,765	31.4	2,835	54,800	102%
Norma 204	27.8	2,550	28.6	2,620	29.4	2,685	30.1	2,745	30.9	2,815	52,300	105%
Hodgdon Varget	23.8	2,580	24.4	2,635	25.1	2,695	25.8	2,755	26.4	2,810	54,600	89%
IMR 4451	26.7	2,545	27.4	2,605	28.2	2,675	28.9	2,735	29.7	2,805	54,600	100%
IMR 4166	23.6	2,560	24.3	2,620	24.9	2,675	25.6	2,735	26.2	2,790	54,600	94%

90 gr Bullet · 25" barrel

COAL: 2.260" • Bullet length: 1.203" • Seat depth: 0.703" • Usable capacity: 30.3 / 36.6 gr H_2O

Powder	STEP 1 · 90%		STEP 2		STEP 3		STEP 4		STEP 5 · LIMIT			
	gr	fps	gr	fps	gr	fps	gr	fps	gr	fps	psi	Fill
Winchester StaBALL 6.5	28.4	2,640	29.2	2,705	29.9	2,760	30.7	2,830	31.5	2,895	53,100	105%
Hodgdon Leverevolution	25.4	2,625	26.1	2,685	26.8	2,745	27.5	2,805	28.2	2,870	54,900	89%
Hodgdon H4350	26.5	2,590	27.2	2,650	27.9	2,710	28.7	2,780	29.4	2,840	54,600	98%
Hodgdon SUPERFORMANCE	28.6	2,565	29.4	2,635	30.2	2,700	31.0	2,770	31.8	2,835	54,800	103%
Winchester StaBALL Match	25.2	2,595	25.9	2,650	26.6	2,710	27.3	2,770	28.0	2,830	54,800	104%
Accurate 2700	26.8	2,560	27.6	2,625	28.3	2,685	29.1	2,755	29.8	2,815	54,600	100%
Alliant Power Pro 2000-MR	25.7	2,575	26.4	2,635	27.1	2,695	27.8	2,755	28.5	2,815	54,700	99%
IMR 4350	26.6	2,550	27.4	2,615	28.1	2,675	28.9	2,740	29.6	2,800	54,000	105%
Ramshot Big Game	26.2	2,555	26.9	2,610	27.6	2,670	28.4	2,740	29.1	2,795	54,600	98%
Alliant Reloder 15	23.9	2,545	24.6	2,605	25.3	2,665	25.9	2,715	26.6	2,775	55,000	94%
Hodgdon H380	25.7	2,540	26.4	2,600	27.1	2,655	27.8	2,715	28.5	2,775	54,500	100%
Alliant Reloder 17	25.6	2,525	26.3	2,585	27.0	2,650	27.7	2,710	28.4	2,770	54,600	94%
Hodgdon H4831SC	28.1	2,500	28.9	2,565	29.6	2,625	30.4	2,690	31.2	2,760	54,700	104%
Hodgdon CFE 223	24.6	2,525	25.3	2,580	26.0	2,640	26.6	2,690	27.3	2,750	54,800	92%
Norma 204	27.2	2,490	27.9	2,550	28.7	2,615	29.4	2,675	30.2	2,745	52,700	105%
Vihtavuori N550	25.2	2,520	25.9	2,575	26.6	2,630	27.3	2,690	28.0	2,745	54,600	97%
IMR 4451	26.1	2,480	26.8	2,540	27.6	2,610	28.3	2,670	29.0	2,730	54,900	99%
Hodgdon Varget	23.1	2,490	23.8	2,555	24.4	2,605	25.1	2,665	25.7	2,720	55,000	88%
Norma 203B	23.2	2,480	23.9	2,545	24.5	2,595	25.1	2,650	25.8	2,710	54,900	92%
IMR 4166	23.0	2,480	23.6	2,530	24.3	2,590	24.9	2,645	25.5	2,695	54,800	93%

.22 PPC USA

Dr. Louis Palmisano and Ferris Pindell developed the .22 PPC in 1974. They designed it primarily for benchrest competition. Its parent was the .220 Russian (5.6x39mm). That case was itself derived from the Soviet 7.62x39mm military cartridge. The designers reshaped it with a 30-degree shoulder. The resulting short and wide powder column became characteristic of a generation of benchrest cartridges. So did its small rifle primer.

For many years the .22 PPC was a wildcat and benchrest specialty. No major company chambered rifles for it until 1993. In that year Ruger offered the No. 1 V and M77 varmint rifles in the caliber. Cases have been manufactured by Sako of Finland and Norma of Sweden. The cartridge is used mainly for short-range benchrest shooting. To a lesser degree it also serves for varmint hunting. Its best-known derivative is the 6mm PPC. That cartridge became dominant in short-range benchrest competition.

Cartridge specifications	
Bullet Diameter	**0.224" (5.69 mm)**
Max Case Length	**1.515" (38.48 mm)**
Case Trim Length	**1.505" (38.23 mm)**
Max COAL	**2.193" (55.70 mm)**
Primer Pocket	**Small Rifle**
Standard Twist	**1:14"**
Case Capacity	**32.3 gr H_2O**
Max Pressure	**4,050 bar / 58,740 psi (C.I.P.)**

40 gr Bullet · 25" barrel

COAL: 1.968" • Bullet length: 0.677" • Seat depth: 0.224" • Usable capacity: 30.2 / 32.3 gr H_2O

Powder	STEP 1 · 90%		STEP 2		STEP 3		STEP 4		STEP 5 · LIMIT			
	gr	fps	gr	fps	gr	fps	gr	fps	gr	fps	psi	Fill
Hodgdon CFE BLK	25.0	3,825	25.7	3,910	26.4	3,995	27.1	4,075	27.8	4,160	58,300	95%
Shooters World SBR-SOCOM	21.4	3,755	22.0	3,835	22.6	3,915	23.2	3,990	23.8	4,070	58,500	81%
Accurate 2230	28.2	3,695	29.0	3,780	29.8	3,870	30.5	3,945	31.3	4,035	55,700	105%
Accurate 2460	28.4	3,655	29.2	3,745	30.0	3,835	30.8	3,920	31.6	4,010	58,600	105%
Ramshot X-Terminator	27.5	3,630	28.3	3,720	29.1	3,805	29.8	3,885	30.6	3,975	58,600	103%
Alliant Power Pro 1200-R	25.7	3,630	26.4	3,710	27.1	3,795	27.9	3,890	28.6	3,970	58,300	96%
Reload Swiss RS40	26.2	3,625	26.9	3,710	27.6	3,790	28.4	3,885	29.1	3,965	58,300	102%
Shooters World AR Plus	26.4	3,625	27.1	3,710	27.9	3,800	28.6	3,880	29.3	3,965	58,500	98%
Vihtavuori N130	24.5	3,630	25.2	3,715	25.9	3,800	26.5	3,870	27.2	3,955	58,300	103%
Accurate 2200	25.1	3,600	25.8	3,680	26.5	3,765	27.2	3,845	27.9	3,930	57,800	105%
Alliant Reloder 7	23.9	3,605	24.6	3,690	25.3	3,775	25.9	3,845	26.6	3,930	58,400	94%
Hodgdon Leverevolution	29.8	3,555	30.6	3,645	31.5	3,745	32.3	3,835	33.1	3,925	56,200	105%
Shooters World The Patriot	26.6	3,595	27.3	3,675	28.1	3,765	28.8	3,845	29.5	3,925	58,300	102%
Hodgdon H4198	23.2	3,600	23.9	3,685	24.5	3,760	25.1	3,830	25.8	3,915	58,200	98%
Hodgdon H4895	27.5	3,555	28.3	3,650	29.1	3,740	29.8	3,820	30.6	3,915	58,500	105%
IMR 4198	23.3	3,590	23.9	3,660	24.6	3,745	25.3	3,825	25.9	3,900	58,300	103%
Accurate 2015	25.9	3,555	26.6	3,635	27.4	3,730	28.1	3,810	28.8	3,895	58,600	99%
Accurate LT-32	24.8	3,535	25.5	3,620	26.2	3,700	26.9	3,785	27.6	3,865	58,600	101%
IMR 3031	26.5	3,500	27.2	3,580	27.9	3,665	28.7	3,755	29.4	3,840	58,500	104%
Hodgdon H322	25.5	3,485	26.2	3,565	26.9	3,650	27.6	3,730	28.3	3,815	58,700	100%

50 gr Bullet · 25" barrel

COAL: 2.004" • Bullet length: 0.713" • Seat depth: 0.224" • Usable capacity: 30.2 / 32.3 gr H_2O

Powder	STEP 1 · 90%		STEP 2		STEP 3		STEP 4		STEP 5 · LIMIT			
	gr	fps	gr	fps	gr	fps	gr	fps	gr	fps	psi	Fill
Hodgdon CFE BLK	23.9	3,460	24.6	3,535	25.3	3,615	25.9	3,680	26.6	3,760	58,600	91%
Hodgdon Leverevolution	29.3	3,405	30.1	3,485	30.9	3,570	31.7	3,655	32.5	3,740	58,600	103%
Alliant AR-Comp	26.1	3,415	26.8	3,485	27.6	3,570	28.3	3,645	29.0	3,720	58,200	103%
Accurate 2230	27.0	3,405	27.8	3,485	28.5	3,560	29.3	3,640	30.0	3,715	58,700	101%
Vihtavuori N530	26.5	3,400	27.2	3,475	27.9	3,550	28.7	3,640	29.4	3,715	58,500	105%
Vihtavuori N135	26.3	3,365	27.0	3,440	27.8	3,520	28.5	3,595	29.2	3,670	56,500	105%
Accurate 2460	26.9	3,355	27.6	3,430	28.4	3,510	29.1	3,580	29.9	3,665	58,700	99%
IMR 4895	27.5	3,320	28.3	3,405	29.1	3,490	29.8	3,565	30.6	3,650	58,100	105%
Ramshot TAC	26.6	3,325	27.4	3,410	28.1	3,480	28.9	3,565	29.6	3,640	58,400	104%
IMR 8208 XBR	26.3	3,305	27.0	3,375	27.8	3,460	28.5	3,535	29.2	3,610	58,600	105%
Vihtavuori N140	27.9	3,285	28.7	3,370	29.4	3,440	30.2	3,525	31.0	3,610	56,800	105%
Hodgdon Benchmark	25.8	3,295	26.5	3,370	27.3	3,455	28.0	3,530	28.7	3,605	56,400	105%
Ramshot X-Terminator	25.9	3,310	26.6	3,380	27.4	3,460	28.1	3,535	28.8	3,605	58,500	97%
Accurate 2015	25.0	3,290	25.7	3,365	26.4	3,440	27.1	3,515	27.8	3,590	58,600	96%
Shooters World The Patriot	25.4	3,295	26.1	3,370	26.8	3,445	27.5	3,515	28.2	3,590	58,200	97%
Vihtavuori N133	24.8	3,285	25.5	3,360	26.2	3,435	26.9	3,510	27.6	3,585	56,000	105%
Alliant Reloder 7	22.7	3,285	23.3	3,350	23.9	3,415	24.6	3,495	25.2	3,560	58,200	89%
Hodgdon Varget	27.1	3,230	27.9	3,315	28.6	3,390	29.4	3,480	30.1	3,555	58,700	104%
Hodgdon H322	24.5	3,230	25.2	3,305	25.9	3,385	26.5	3,450	27.2	3,525	58,500	96%
IMR 4198	22.1	3,255	22.7	3,325	23.3	3,390	23.9	3,455	24.5	3,525	58,500	98%

55 gr Bullet · 25" barrel

COAL: 2.013" • Bullet length: 0.722" • Seat depth: 0.224" • Usable capacity: 30.2 / 32.3 gr H_2O

Powder	STEP 1 · 90%		STEP 2		STEP 3		STEP 4		STEP 5 · LIMIT			
	gr	fps	gr	fps	gr	fps	gr	fps	gr	fps	psi	Fill
Hodgdon Leverevolution	28.8	3,300	29.6	3,380	30.4	3,465	31.2	3,545	32.0	3,630	58,500	101%
Hodgdon CFE BLK	23.4	3,305	24.0	3,370	24.7	3,445	25.4	3,520	26.0	3,585	58,400	89%
Vihtavuori N530	25.7	3,270	26.4	3,345	27.1	3,415	27.9	3,500	28.6	3,575	58,700	102%
Accurate 2520	27.7	3,255	28.5	3,335	29.3	3,415	30.0	3,485	30.8	3,570	56,900	105%
Alliant AR-Comp	25.6	3,280	26.3	3,355	27.0	3,425	27.7	3,495	28.4	3,570	58,700	101%
Winchester 748	27.7	3,245	28.5	3,325	29.3	3,410	30.0	3,480	30.8	3,565	55,600	105%
Vihtavuori N135	25.9	3,255	26.6	3,330	27.4	3,410	28.1	3,480	28.8	3,550	58,300	103%
Accurate 2230	26.2	3,250	26.9	3,320	27.6	3,390	28.4	3,470	29.1	3,540	58,300	97%
Vihtavuori N140	27.7	3,225	28.5	3,305	29.3	3,385	30.0	3,455	30.8	3,540	58,700	104%
Ramshot TAC	26.2	3,215	26.9	3,285	27.6	3,360	28.4	3,440	29.1	3,515	58,300	102%
Hodgdon Benchmark	25.6	3,220	26.3	3,290	27.0	3,365	27.7	3,435	28.4	3,510	58,400	104%
Shooters World AR Plus	24.9	3,215	25.6	3,290	26.3	3,360	27.0	3,435	27.7	3,510	58,600	93%
Accurate 2460	26.2	3,220	26.9	3,285	27.6	3,355	28.4	3,435	29.1	3,505	58,400	96%
Vihtavuori N133	24.7	3,205	25.4	3,275	26.0	3,335	26.7	3,410	27.4	3,480	58,300	104%
Alliant Power Pro Varmint	26.3	3,180	27.0	3,250	27.8	3,330	28.5	3,405	29.2	3,475	58,300	102%
Accurate 2015	24.6	3,170	25.3	3,245	26.0	3,320	26.6	3,380	27.3	3,455	58,400	94%
Ramshot X-Terminator	25.2	3,165	25.9	3,235	26.6	3,305	27.3	3,375	28.0	3,445	58,400	94%
Shooters World The Patriot	24.8	3,160	25.5	3,230	26.2	3,300	26.9	3,370	27.6	3,440	58,300	95%
Hodgdon H322	24.0	3,110	24.7	3,185	25.4	3,260	26.0	3,320	26.7	3,395	58,500	94%
IMR 4198	21.5	3,105	22.1	3,170	22.7	3,235	23.3	3,300	23.9	3,365	58,700	95%

.22-250 Remington

The .22-250 began as a wildcat in 1937. That year Grosvenor Wotkyns, J.E. Gebby and J.B. Smith necked down the .250-3000 Savage case to hold .224-inch bullets. Gebby's version was known as the .22 Varminter. For nearly three decades the cartridge circulated among wildcatters under several other names. Remington adopted it as a factory cartridge in 1965 and added its own name to the designation. The company chambered it in the Model 700 and 40-XB rifles.

Factory loads typically drive 55-grain bullets at about 3,680 fps. Lighter bullets can exceed 4,000 fps. The cartridge is used primarily for varmint and predator hunting. It is especially at home in the open country of the western United States. It remains one of the most widely chambered varmint cartridges. Traditional barrels use 1:12- or 1:14-inch twists for light bullets. Faster twists are now offered for heavier and longer bullets.

Cartridge specifications	
Bullet Diameter	**0.224" (5.69 mm)**
Max Case Length	**1.912" (48.56 mm)**
Case Trim Length	**1.902" (48.31 mm)**
Max COAL	**2.350" (59.69 mm)**
Primer Pocket	**Large Rifle**
Standard Twist	**1:12"**
Case Capacity	**43.8 gr H_2O**
Max Pressure	**65,000 psi (SAAMI)**

35 gr Bullet · 25" barrel

COAL: 2.350" • Bullet length: 0.725" • Seat depth: 0.287" • Usable capacity: 41.1 / 43.8 gr H_2O

Powder	STEP 1 · 90%		STEP 2		STEP 3		STEP 4		STEP 5 · LIMIT			
	gr	fps	gr	fps	gr	fps	gr	fps	gr	fps	psi	Fill
Hodgdon CFE BLK	32.0	4,315	32.9	4,405	33.8	4,495	34.7	4,585	35.6	4,675	64,700	89%
Alliant AR-Comp	35.1	4,240	36.1	4,335	37.0	4,420	38.0	4,520	39.0	4,615	65,000	102%
Hodgdon Leverevolution	38.8	4,180	39.9	4,285	41.0	4,390	42.0	4,490	43.1	4,600	64,600	100%
Ramshot X-Terminator	35.9	4,210	36.9	4,300	37.9	4,395	38.9	4,490	39.9	4,585	64,700	98%
Accurate 2520	37.3	4,150	38.3	4,245	39.3	4,340	40.4	4,445	41.4	4,545	64,700	104%
Vihtavuori N130	32.0	4,185	32.9	4,275	33.8	4,365	34.7	4,455	35.6	4,545	64,900	99%
Reload Swiss RS40	33.8	4,175	34.7	4,265	35.6	4,350	36.6	4,450	37.5	4,540	64,600	97%
Hodgdon H4895	35.6	4,120	36.6	4,220	37.6	4,315	38.6	4,415	39.6	4,515	64,900	100%
Hodgdon Benchmark	35.1	4,100	36.1	4,195	37.0	4,285	38.0	4,380	39.0	4,480	64,900	105%
Hodgdon CFE 223	38.1	4,050	39.1	4,145	40.2	4,255	41.3	4,360	42.3	4,460	63,300	105%
IMR 8208 XBR	35.6	4,080	36.6	4,175	37.5	4,265	38.5	4,365	39.5	4,460	64,700	104%
Shooters World AR Plus	33.2	4,090	34.1	4,180	35.0	4,265	36.0	4,365	36.9	4,455	64,800	91%
Hodgdon Varget	37.0	4,025	38.0	4,125	39.0	4,225	40.1	4,335	41.1	4,440	64,900	104%
Vihtavuori N135	34.1	4,055	35.0	4,140	36.0	4,235	37.0	4,330	37.9	4,415	64,800	100%
IMR 3031	34.2	4,025	35.2	4,125	36.1	4,215	37.0	4,305	38.0	4,405	64,600	99%
Alliant Power Pro Varmint	35.4	4,020	36.4	4,115	37.3	4,200	38.3	4,300	39.3	4,400	64,900	101%
Winchester 748	36.4	4,005	37.4	4,100	38.4	4,195	39.4	4,295	40.4	4,395	64,800	101%
Shooters World Tactical Rifle	34.6	4,000	35.5	4,090	36.5	4,185	37.5	4,285	38.4	4,375	64,900	96%
Hodgdon H335	34.4	4,000	35.4	4,095	36.3	4,185	37.3	4,280	38.2	4,370	64,600	92%
Shooters World Match Rifle	35.6	3,975	36.6	4,070	37.6	4,170	38.6	4,265	39.6	4,365	64,600	99%

40 gr Bullet · 25" barrel

COAL: 2.350" • Bullet length: 0.677" • Seat depth: 0.239" • Usable capacity: 41.5 / 43.8 gr H_2O

Powder	STEP 1 · 90%		STEP 2		STEP 3		STEP 4		STEP 5 · LIMIT			
	gr	fps	gr	fps	gr	fps	gr	fps	gr	fps	psi	Fill
Hodgdon Leverevolution	38.4	4,055	39.5	4,155	40.5	4,250	41.6	4,350	42.7	4,455	64,600	98%
Hodgdon CFE BLK	31.4	4,095	32.3	4,180	33.1	4,260	34.0	4,345	34.9	4,430	64,500	86%
Accurate 2230	35.6	4,050	36.6	4,135	37.5	4,215	38.5	4,310	39.5	4,400	64,600	96%
Alliant AR-Comp	34.4	4,050	35.4	4,140	36.3	4,220	37.3	4,315	38.2	4,395	64,800	99%
Accurate 2520	36.8	4,005	37.8	4,095	38.8	4,185	39.9	4,285	40.9	4,380	64,900	101%
Ramshot X-Terminator	35.2	4,025	36.2	4,115	37.2	4,205	38.1	4,285	39.1	4,375	64,900	95%
IMR 4895	36.5	3,980	37.5	4,075	38.5	4,165	39.6	4,270	40.6	4,365	64,800	101%
Accurate 2460	35.6	4,000	36.6	4,090	37.6	4,180	38.6	4,265	39.6	4,360	64,900	96%
Hodgdon H4895	35.2	3,990	36.2	4,085	37.2	4,175	38.1	4,260	39.1	4,355	65,000	98%
Vihtavuori N140	37.2	3,960	38.2	4,050	39.3	4,155	40.3	4,250	41.3	4,345	64,800	101%
Hodgdon Varget	36.5	3,920	37.5	4,015	38.5	4,110	39.6	4,220	40.6	4,315	64,600	102%
IMR 4064	36.5	3,920	37.5	4,010	38.5	4,100	39.6	4,205	40.6	4,300	64,800	105%
Ramshot TAC	34.7	3,935	35.7	4,030	36.7	4,120	37.6	4,205	38.6	4,300	64,900	99%
Accurate 2015	33.2	3,940	34.1	4,025	35.0	4,110	36.0	4,205	36.9	4,290	64,700	92%
Alliant Reloder 15	36.7	3,905	37.7	3,995	38.8	4,095	39.8	4,190	40.8	4,285	64,000	105%
Shooters World The Patriot	33.8	3,935	34.7	4,020	35.6	4,100	36.6	4,190	37.5	4,275	64,900	94%
Alliant Power Pro Varmint	34.9	3,880	35.9	3,975	36.8	4,055	37.8	4,150	38.8	4,240	64,800	99%
IMR 4166	35.1	3,870	36.1	3,960	37.0	4,050	38.0	4,145	39.0	4,240	64,900	104%
Shooters World Match Rifle	35.3	3,860	36.3	3,955	37.3	4,045	38.2	4,130	39.2	4,225	64,600	97%
Vihtavuori N135	33.3	3,880	34.2	3,960	35.1	4,040	36.1	4,130	37.0	4,215	64,600	97%

45 gr Bullet · 25" barrel

COAL: 2.278" • Bullet length: 0.590" • Seat depth: 0.224" • Usable capacity: 41.7 / 43.8 gr H_2O

Powder	STEP 1 · 90%		STEP 2		STEP 3		STEP 4		STEP 5 · LIMIT			
	gr	fps	gr	fps	gr	fps	gr	fps	gr	fps	psi	Fill
Hodgdon Leverevolution	38.0	3,935	39.0	4,025	40.1	4,120	41.2	4,220	42.2	4,315	65,000	97%
Vihtavuori N540	37.1	3,900	38.1	3,985	39.2	4,080	40.2	4,165	41.2	4,255	64,100	105%
Hodgdon CFE 223	37.5	3,845	38.5	3,935	39.6	4,030	40.7	4,130	41.7	4,220	64,900	102%
Reload Swiss RS52	36.5	3,835	37.5	3,930	38.5	4,020	39.6	4,120	40.6	4,215	65,000	102%
Hodgdon CFE BLK	30.8	3,895	31.7	3,980	32.5	4,050	33.4	4,135	34.2	4,210	64,900	84%
Accurate 2520	36.2	3,855	37.2	3,945	38.2	4,030	39.2	4,115	40.2	4,205	64,900	99%
IMR 4895	35.8	3,840	36.8	3,930	37.8	4,020	38.8	4,110	39.8	4,200	64,600	99%
Alliant AR-Comp	33.6	3,865	34.5	3,940	35.5	4,030	36.4	4,110	37.3	4,190	64,700	96%
Hodgdon H4895	34.6	3,845	35.5	3,925	36.5	4,015	37.5	4,105	38.4	4,190	65,000	95%
Norma 202	35.4	3,840	36.4	3,930	37.3	4,005	38.3	4,095	39.3	4,185	64,900	102%
Vihtavuori N140	36.5	3,825	37.5	3,915	38.5	4,005	39.5	4,095	40.5	4,185	64,500	99%
Hodgdon Varget	36.0	3,815	37.0	3,905	38.0	3,995	39.0	4,090	40.0	4,180	64,600	100%
Vihtavuori N530	33.4	3,840	34.3	3,920	35.3	4,010	36.2	4,095	37.1	4,175	64,700	95%
Accurate 2460	34.8	3,830	35.8	3,915	36.8	4,000	37.7	4,075	38.7	4,165	64,900	93%
Ramshot X-Terminator	34.3	3,840	35.3	3,925	36.2	4,000	37.1	4,080	38.1	4,165	64,600	92%
IMR 4064	35.8	3,795	36.8	3,885	37.8	3,975	38.8	4,060	39.8	4,150	65,000	102%
Alliant Reloder 15	36.1	3,790	37.1	3,880	38.1	3,965	39.1	4,055	40.1	4,145	64,800	103%
Norma 203B	36.0	3,730	37.0	3,820	38.0	3,910	39.0	4,000	40.0	4,090	64,800	104%
Shooters World The Creed	36.6	3,720	37.6	3,810	38.7	3,910	39.7	4,000	40.7	4,090	65,000	101%
Shooters World The Patriot	33.0	3,755	33.9	3,835	34.9	3,920	35.8	4,000	36.7	4,080	64,800	91%

50 gr Bullet · 25" barrel

COAL: 2.350" • Bullet length: 0.723" • Seat depth: 0.285" • Usable capacity: 41.1 / 43.8 gr H_2O

Powder	STEP 1 · 90%		STEP 2		STEP 3		STEP 4		STEP 5 · LIMIT			
	gr	fps	gr	fps	gr	fps	gr	fps	gr	fps	psi	Fill
Hodgdon Leverevolution	36.9	3,775	37.9	3,860	39.0	3,955	40.0	4,045	41.0	4,135	64,700	95%
Hodgdon CFE 223	36.5	3,695	37.5	3,780	38.5	3,865	39.5	3,955	40.5	4,045	64,600	100%
Reload Swiss RS52	35.6	3,695	36.6	3,785	37.5	3,865	38.5	3,955	39.5	4,045	64,800	101%
Hodgdon Varget	35.0	3,675	36.0	3,760	37.0	3,850	37.9	3,930	38.9	4,020	64,800	98%
IMR 4895	34.7	3,685	35.7	3,770	36.6	3,850	37.5	3,925	38.5	4,015	64,600	97%
Vihtavuori N140	35.4	3,670	36.4	3,755	37.3	3,835	38.3	3,920	39.3	4,010	64,900	98%
Accurate 2520	35.0	3,675	36.0	3,760	37.0	3,845	37.9	3,920	38.9	4,005	64,600	97%
Hodgdon H4895	33.5	3,675	34.4	3,755	35.4	3,840	36.3	3,920	37.2	4,000	65,000	94%
Vihtavuori N530	32.1	3,660	33.0	3,740	33.9	3,820	34.8	3,905	35.7	3,985	64,800	93%
Norma 202	34.1	3,655	35.0	3,730	36.0	3,815	37.0	3,905	37.9	3,980	64,600	100%
Accurate 2230	33.5	3,665	34.4	3,740	35.4	3,825	36.3	3,900	37.2	3,975	64,900	92%
IMR 4064	34.6	3,640	35.5	3,715	36.5	3,805	37.5	3,890	38.4	3,970	64,600	100%
Alliant Reloder 15	34.8	3,625	35.8	3,710	36.8	3,795	37.7	3,875	38.7	3,965	64,600	101%
Ramshot X-Terminator	33.1	3,645	34.0	3,720	35.0	3,805	35.9	3,880	36.8	3,960	65,000	91%
Accurate 2460	33.6	3,640	34.5	3,715	35.5	3,800	36.4	3,875	37.3	3,950	64,600	91%
Ramshot TAC	33.2	3,620	34.1	3,695	35.0	3,775	36.0	3,860	36.9	3,940	64,600	96%
IMR 4320	34.5	3,575	35.5	3,665	36.4	3,745	37.3	3,825	38.3	3,915	64,600	94%
Shooters World Match Rifle	33.8	3,580	34.8	3,665	35.7	3,745	36.6	3,825	37.6	3,915	64,600	94%
Winchester StaBALL Match	34.6	3,585	35.5	3,660	36.5	3,750	37.5	3,835	38.4	3,915	61,500	105%
Winchester 760	37.7	3,510	38.8	3,600	39.8	3,685	40.9	3,780	41.9	3,870	62,400	105%

55 gr Bullet · 25" barrel

COAL: 2.346" • Bullet length: 0.724" • Seat depth: 0.290" • Usable capacity: 41.1 / 43.8 gr H_2O

Powder	STEP 1 · 90%		STEP 2		STEP 3		STEP 4		STEP 5 · LIMIT			
	gr	fps	gr	fps	gr	fps	gr	fps	gr	fps	psi	Fill
Hodgdon Leverevolution	36.3	3,650	37.3	3,735	38.3	3,820	39.3	3,905	40.3	3,990	64,600	94%
Reload Swiss RS52	35.0	3,575	36.0	3,660	37.0	3,750	37.9	3,825	38.9	3,915	64,800	100%
Hodgdon CFE 223	35.9	3,575	36.9	3,655	37.9	3,740	38.9	3,825	39.9	3,910	64,900	99%
Ramshot Big Game	37.6	3,545	38.6	3,625	39.7	3,720	40.8	3,810	41.8	3,895	64,700	104%
Hodgdon Varget	34.4	3,560	35.4	3,645	36.3	3,720	37.3	3,810	38.2	3,885	64,800	97%
Norma 201	33.3	3,545	34.2	3,625	35.1	3,710	36.1	3,800	37.0	3,880	64,800	100%
IMR 4895	33.9	3,545	34.9	3,630	35.8	3,705	36.8	3,790	37.7	3,870	64,900	95%
Vihtavuori N140	34.6	3,535	35.5	3,610	36.5	3,695	37.5	3,780	38.4	3,855	64,600	95%
Hodgdon H4895	32.8	3,535	33.7	3,610	34.6	3,690	35.5	3,765	36.4	3,840	64,800	92%
IMR 4064	33.8	3,510	34.8	3,595	35.7	3,670	36.6	3,745	37.6	3,830	64,700	98%
Winchester StaBALL Match	34.6	3,510	35.5	3,585	36.5	3,670	37.5	3,755	38.4	3,830	64,200	105%
Vihtavuori N150	34.4	3,505	35.4	3,590	36.3	3,665	37.3	3,750	38.2	3,825	64,900	104%
Alliant Power Pro 2000-MR	35.7	3,475	36.7	3,560	37.7	3,645	38.7	3,730	39.7	3,815	64,800	102%
Alliant Reloder 15	34.0	3,500	35.0	3,580	35.9	3,655	36.8	3,730	37.8	3,815	64,600	98%
Winchester 760	37.7	3,465	38.8	3,555	39.8	3,640	40.9	3,730	41.9	3,815	64,900	105%
Shooters World The Creed	34.9	3,475	35.9	3,560	36.8	3,635	37.8	3,720	38.8	3,805	64,700	98%
Ramshot TAC	32.7	3,490	33.6	3,570	34.5	3,645	35.4	3,720	36.3	3,795	64,800	94%
Accurate 2700	37.1	3,430	38.1	3,515	39.2	3,605	40.2	3,690	41.2	3,775	65,000	102%
Alliant Reloder 17	36.2	3,415	37.2	3,505	38.2	3,590	39.2	3,680	40.2	3,770	64,600	98%
Vihtavuori N133	30.8	3,455	31.7	3,530	32.5	3,600	33.4	3,675	34.2	3,740	64,900	96%

60 gr Bullet · 25" barrel

COAL: 2.350" • Bullet length: 0.831" • Seat depth: 0.393" • Usable capacity: 40.1 / 43.8 gr H_2O

Powder	STEP 1 · 90%		STEP 2		STEP 3		STEP 4		STEP 5 · LIMIT			
	gr	fps	gr	fps	gr	fps	gr	fps	gr	fps	psi	Fill
Hodgdon Leverevolution	35.2	3,510	36.2	3,595	37.2	3,675	38.1	3,755	39.1	3,840	64,900	93%
Reload Swiss RS52	33.9	3,435	34.9	3,520	35.8	3,595	36.8	3,685	37.7	3,760	64,800	99%
Ramshot Big Game	36.5	3,420	37.5	3,500	38.5	3,580	39.6	3,675	40.6	3,755	64,900	103%
Hodgdon CFE 223	34.7	3,425	35.7	3,510	36.7	3,590	37.6	3,665	38.6	3,750	64,700	98%
Vihtavuori N550	36.0	3,425	37.0	3,505	38.0	3,585	39.0	3,665	40.0	3,745	62,300	105%
Norma 201	32.2	3,415	33.1	3,495	34.0	3,575	34.9	3,655	35.8	3,735	64,800	99%
Hodgdon H4350	36.7	3,380	37.7	3,465	38.8	3,560	39.8	3,645	40.8	3,730	64,700	103%
Hodgdon Varget	33.2	3,410	34.1	3,490	35.0	3,565	36.0	3,650	36.9	3,725	64,600	96%
Winchester StaBALL 6.5	37.5	3,370	38.5	3,450	39.6	3,540	40.7	3,630	41.7	3,715	62,900	105%
IMR 4895	32.7	3,395	33.6	3,470	34.5	3,545	35.4	3,620	36.3	3,695	64,700	94%
Reload Swiss RS50	34.5	3,365	35.5	3,450	36.4	3,520	37.3	3,595	38.3	3,680	64,600	100%
Winchester 760	36.5	3,340	37.5	3,420	38.5	3,505	39.6	3,595	40.6	3,680	64,500	104%
Alliant Power Pro 2000-MR	34.7	3,355	35.7	3,435	36.6	3,510	37.5	3,585	38.5	3,670	64,900	101%
Hodgdon H414	36.5	3,335	37.5	3,420	38.5	3,500	39.5	3,585	40.5	3,670	64,700	103%
IMR 4064	32.6	3,365	33.5	3,440	34.4	3,515	35.3	3,590	36.2	3,665	64,600	97%
Vihtavuori N150	33.1	3,355	34.0	3,430	35.0	3,510	35.9	3,585	36.8	3,665	64,800	103%
Alliant Reloder 15	32.9	3,365	33.8	3,435	34.7	3,510	35.6	3,585	36.5	3,660	65,000	97%
Ramshot TAC	31.6	3,340	32.5	3,415	33.4	3,490	34.2	3,555	35.1	3,630	64,700	93%
IMR 8208 XBR	31.1	3,330	32.0	3,405	32.9	3,480	33.7	3,545	34.6	3,620	64,600	94%
Hodgdon BL-C(2)	32.6	3,285	33.5	3,360	34.4	3,435	35.3	3,510	36.2	3,590	64,700	91%

64 gr Bullet · 25" barrel

COAL: 2.350" • Bullet length: 0.808" • Seat depth: 0.371" • Usable capacity: 40.3 / 43.8 gr H_2O

Powder	STEP 1 · 90%		STEP 2		STEP 3		STEP 4		STEP 5 · LIMIT			
	gr	fps	gr	fps	gr	fps	gr	fps	gr	fps	psi	Fill
Hodgdon Leverevolution	34.8	3,425	35.8	3,505	36.8	3,585	37.7	3,660	38.7	3,745	64,800	92%
Vihtavuori N550	35.9	3,370	36.9	3,450	37.9	3,525	38.9	3,605	39.9	3,685	64,600	104%
Reload Swiss RS52	33.7	3,370	34.6	3,440	35.5	3,515	36.5	3,600	37.4	3,675	64,900	97%
Winchester StaBALL 6.5	37.6	3,340	38.6	3,415	39.7	3,505	40.8	3,595	41.8	3,675	64,700	105%
Ramshot Big Game	36.2	3,350	37.2	3,430	38.2	3,510	39.2	3,590	40.2	3,670	64,700	102%
Hodgdon H380	35.8	3,340	36.8	3,420	37.8	3,500	38.8	3,585	39.8	3,665	63,400	105%
Hodgdon H4350	36.4	3,330	37.4	3,415	38.4	3,495	39.4	3,580	40.4	3,665	64,800	101%
Hodgdon CFE 223	34.4	3,350	35.4	3,430	36.3	3,500	37.3	3,585	38.2	3,655	64,600	97%
Hodgdon Varget	32.9	3,340	33.8	3,410	34.7	3,485	35.6	3,560	36.5	3,635	64,600	94%
Winchester 760	36.4	3,295	37.4	3,375	38.4	3,455	39.4	3,535	40.4	3,620	65,000	103%
IMR 4895	32.2	3,305	33.1	3,375	34.0	3,450	34.9	3,525	35.8	3,600	64,700	92%
Alliant Power Pro 2000-MR	34.3	3,275	35.3	3,360	36.2	3,430	37.1	3,505	38.1	3,585	64,600	99%
Winchester 748	32.6	3,290	33.5	3,360	34.4	3,435	35.3	3,510	36.2	3,585	64,700	92%
IMR 4064	32.2	3,285	33.1	3,360	34.0	3,430	34.9	3,505	35.8	3,575	64,800	95%
Accurate 2520	32.6	3,280	33.5	3,355	34.4	3,425	35.3	3,495	36.2	3,570	64,700	92%
Accurate 2700	35.7	3,250	36.7	3,325	37.7	3,410	38.7	3,490	39.7	3,570	64,800	100%
Vihtavuori N150	32.7	3,275	33.6	3,350	34.5	3,420	35.4	3,495	36.3	3,565	64,800	101%
Alliant Reloder 15	32.3	3,265	33.2	3,340	34.1	3,410	35.0	3,485	35.9	3,555	64,600	95%
IMR 4451	35.9	3,215	36.9	3,295	37.9	3,375	38.9	3,460	39.9	3,545	64,800	103%
Norma 202	31.7	3,265	32.6	3,335	33.5	3,410	34.3	3,470	35.2	3,545	64,800	95%

69 gr Bullet · 25" barrel

COAL: 2.330" • Bullet length: 0.961" • Seat depth: 0.543" • Usable capacity: 38.9 / 43.8 gr H_2O

Powder	STEP 1 · 90%		STEP 2		STEP 3		STEP 4		STEP 5 · LIMIT			
	gr	fps	gr	fps	gr	fps	gr	fps	gr	fps	psi	Fill
Hodgdon Leverevolution	33.5	3,290	34.4	3,365	35.4	3,445	36.3	3,520	37.2	3,590	64,600	91%
Hodgdon SUPERFORMANCE	37.5	3,200	38.5	3,280	39.6	3,370	40.7	3,460	41.7	3,545	61,700	105%
Vihtavuori N550	34.5	3,240	35.5	3,320	36.4	3,390	37.3	3,460	38.3	3,540	64,800	104%
Winchester StaBALL 6.5	36.3	3,225	37.3	3,300	38.3	3,380	39.3	3,460	40.3	3,540	64,700	105%
Hodgdon H380	34.6	3,225	35.5	3,300	36.5	3,380	37.5	3,460	38.4	3,535	64,000	105%
Hodgdon H4350	34.9	3,210	35.9	3,290	36.8	3,365	37.8	3,445	38.8	3,530	64,700	101%
Ramshot Big Game	34.8	3,220	35.8	3,300	36.8	3,375	37.7	3,450	38.7	3,530	64,600	101%
Hodgdon Varget	31.6	3,205	32.5	3,275	33.4	3,350	34.2	3,420	35.1	3,490	64,800	94%
Hodgdon H414	34.9	3,160	35.9	3,240	36.8	3,315	37.8	3,395	38.8	3,480	64,900	102%
Alliant Reloder 17	33.7	3,145	34.6	3,220	35.5	3,295	36.5	3,380	37.4	3,460	64,600	97%
Vihtavuori N540	31.8	3,180	32.7	3,250	33.5	3,315	34.4	3,385	35.3	3,455	64,600	96%
Alliant Power Pro 2000-MR	33.0	3,150	33.9	3,225	34.9	3,305	35.8	3,375	36.7	3,450	64,800	99%
IMR 4895	30.9	3,165	31.8	3,240	32.6	3,305	33.4	3,370	34.3	3,445	64,600	91%
Winchester 748	31.3	3,150	32.2	3,225	33.0	3,290	33.9	3,365	34.8	3,440	64,600	92%
Shooters World The Creed	32.1	3,145	33.0	3,215	33.9	3,290	34.8	3,360	35.7	3,435	64,700	95%
Norma 203B	31.3	3,145	32.2	3,215	33.0	3,280	33.9	3,355	34.8	3,430	64,700	97%
IMR 4064	30.9	3,150	31.8	3,225	32.6	3,290	33.4	3,355	34.3	3,425	64,800	94%
Vihtavuori N150	31.3	3,135	32.2	3,205	33.0	3,270	33.9	3,345	34.8	3,415	64,700	100%
Accurate 4064	31.3	3,120	32.2	3,195	33.0	3,260	33.9	3,335	34.8	3,405	64,600	99%
Alliant Reloder 15	31.0	3,135	31.9	3,205	32.7	3,270	33.5	3,335	34.4	3,405	64,600	94%

75 gr Bullet · 25" barrel

COAL: 2.350" • Bullet length: 1.049" • Seat depth: 0.611" • Usable capacity: 38.3 / 43.8 gr H_2O

Powder	STEP 1 · 90%		STEP 2		STEP 3		STEP 4		STEP 5 · LIMIT			
	gr	fps	gr	fps	gr	fps	gr	fps	gr	fps	psi	Fill
Hodgdon SUPERFORMANCE	37.0	3,135	38.0	3,215	39.0	3,295	40.1	3,385	41.1	3,465	63,400	105%
Hodgdon Leverevolution	32.6	3,160	33.5	3,235	34.4	3,305	35.3	3,375	36.2	3,450	64,800	90%
Winchester StaBALL 6.5	35.4	3,110	36.4	3,190	37.3	3,260	38.3	3,335	39.3	3,415	64,700	103%
Hodgdon H380	33.8	3,120	34.7	3,190	35.6	3,260	36.6	3,340	37.5	3,410	64,800	104%
Hodgdon H4350	33.9	3,100	34.9	3,180	35.8	3,250	36.8	3,330	37.7	3,405	64,800	99%
Ramshot Big Game	33.9	3,100	34.9	3,180	35.8	3,250	36.8	3,330	37.7	3,400	64,700	100%
Reload Swiss RS52	31.5	3,105	32.4	3,175	33.3	3,250	34.1	3,315	35.0	3,390	64,700	96%
Accurate 4350	34.6	3,070	35.5	3,140	36.5	3,220	37.5	3,300	38.4	3,370	61,400	105%
Hodgdon H414	34.0	3,055	35.0	3,135	35.9	3,205	36.8	3,275	37.8	3,355	64,800	100%
Alliant Reloder 17	32.9	3,050	33.8	3,120	34.7	3,195	35.6	3,270	36.5	3,345	64,600	96%
Hodgdon Varget	30.6	3,070	31.5	3,140	32.3	3,205	33.1	3,270	34.0	3,345	64,600	92%
Accurate 2700	33.6	3,025	34.5	3,095	35.5	3,175	36.4	3,245	37.3	3,320	64,800	99%
Alliant Power Pro 2000-MR	32.1	3,030	33.0	3,100	33.9	3,175	34.8	3,245	35.7	3,315	64,800	98%
Reload Swiss RS50	32.0	3,030	32.9	3,100	33.8	3,170	34.7	3,240	35.6	3,310	64,700	98%
Vihtavuori N540	30.7	3,035	31.6	3,105	32.4	3,165	33.3	3,235	34.1	3,300	64,600	95%
Reload Swiss RS70	35.8	2,975	36.8	3,055	37.8	3,130	38.8	3,210	39.8	3,295	61,100	105%
Vihtavuori N140	30.6	3,025	31.5	3,100	32.3	3,160	33.1	3,225	34.0	3,295	64,900	90%
IMR 4064	29.9	3,020	30.7	3,080	31.6	3,150	32.4	3,215	33.2	3,280	64,800	93%
Vihtavuori N150	30.3	3,005	31.2	3,075	32.0	3,135	32.9	3,210	33.7	3,270	64,900	99%
Alliant Reloder 15	30.0	3,000	30.8	3,065	31.6	3,125	32.5	3,200	33.3	3,260	64,800	93%

80 gr Bullet · 25" barrel

COAL: 2.350" • Bullet length: 1.078" • Seat depth: 0.640" • Usable capacity: 38.1 / 43.8 gr H_2O

Powder	STEP 1 · 90%		STEP 2		STEP 3		STEP 4		STEP 5 · LIMIT			
	gr	fps	gr	fps	gr	fps	gr	fps	gr	fps	psi	Fill
Hodgdon SUPERFORMANCE	36.7	3,085	37.7	3,160	38.8	3,250	39.8	3,330	40.8	3,410	64,900	105%
Hodgdon Leverevolution	32.0	3,065	32.9	3,135	33.8	3,205	34.6	3,265	35.5	3,340	64,900	89%
Accurate 4350	34.4	3,020	35.4	3,100	36.3	3,170	37.3	3,245	38.2	3,320	63,400	105%
Winchester StaBALL 6.5	34.7	3,020	35.7	3,095	36.7	3,170	37.6	3,240	38.6	3,315	64,500	102%
Hodgdon H4350	33.2	3,010	34.1	3,080	35.0	3,150	36.0	3,230	36.9	3,305	64,600	98%
Reload Swiss RS60	33.4	3,005	34.3	3,080	35.3	3,160	36.2	3,230	37.1	3,305	64,900	100%
Hodgdon H380	33.0	3,010	33.9	3,080	34.9	3,160	35.8	3,230	36.7	3,300	64,500	102%
IMR 4350	33.5	2,980	34.4	3,050	35.4	3,130	36.3	3,200	37.2	3,270	61,500	105%
IMR 4955	34.9	2,960	35.9	3,035	36.8	3,110	37.8	3,185	38.8	3,265	64,800	102%
Vihtavuori N550	32.4	2,990	33.3	3,055	34.2	3,125	35.1	3,190	36.0	3,260	64,700	99%
Hodgdon CFE 223	31.5	2,980	32.4	3,050	33.3	3,120	34.1	3,180	35.0	3,250	64,900	94%
Hodgdon Varget	30.0	2,970	30.8	3,035	31.6	3,095	32.5	3,170	33.3	3,230	64,600	91%
Alliant Power Pro 2000-MR	31.5	2,940	32.4	3,010	33.3	3,080	34.1	3,140	35.0	3,210	64,700	97%
Reload Swiss RS50	31.5	2,940	32.4	3,010	33.3	3,075	34.1	3,140	35.0	3,205	65,000	97%
Shooters World The Creed	30.5	2,920	31.4	2,990	32.2	3,055	33.0	3,115	33.9	3,185	64,600	92%
IMR 7828	35.7	2,875	36.7	2,950	37.7	3,025	38.7	3,100	39.7	3,180	61,400	105%
Vihtavuori N540	30.0	2,930	30.8	2,990	31.6	3,050	32.5	3,120	33.3	3,180	64,900	93%
Hodgdon H4831SC	34.6	2,885	35.5	2,955	36.5	3,030	37.5	3,105	38.4	3,175	64,900	101%
IMR 4064	29.2	2,915	30.0	2,975	30.8	3,040	31.6	3,100	32.4	3,160	64,500	91%
Alliant Reloder 15	29.3	2,900	30.1	2,960	30.9	3,020	31.7	3,085	32.5	3,145	64,800	91%

90 gr Bullet · 25" barrel

COAL: 2.350" • Bullet length: 1.235" • Seat depth: 0.797" • Usable capacity: 36.9 / 43.8 gr H_2O

Powder	STEP 1 · 90%		STEP 2		STEP 3		STEP 4		STEP 5 · LIMIT			
	gr	fps	gr	fps	gr	fps	gr	fps	gr	fps	psi	Fill
Hodgdon SUPERFORMANCE	35.2	2,935	36.2	3,010	37.2	3,085	38.1	3,155	39.1	3,235	64,900	104%
Accurate 4350	33.1	2,875	34.0	2,945	35.0	3,020	35.9	3,090	36.8	3,160	64,800	104%
Norma URP	31.7	2,865	32.6	2,935	33.5	3,005	34.3	3,070	35.2	3,140	64,900	105%
Reload Swiss RS60	32.0	2,855	32.9	2,925	33.8	2,995	34.6	3,055	35.5	3,130	64,800	99%
Reload Swiss RS62	33.5	2,840	34.4	2,910	35.4	2,990	36.3	3,060	37.2	3,130	64,300	105%
IMR 4350	32.4	2,850	33.3	2,920	34.2	2,990	35.1	3,055	36.0	3,125	64,600	105%
Winchester StaBALL 6.5	33.2	2,850	34.1	2,915	35.0	2,980	36.0	3,055	36.9	3,125	64,700	101%
Reload Swiss RS70	34.5	2,830	35.5	2,905	36.4	2,975	37.3	3,045	38.3	3,120	64,800	105%
Hodgdon H4350	31.6	2,845	32.5	2,910	33.4	2,980	34.2	3,040	35.1	3,110	64,800	96%
Ramshot Big Game	31.8	2,835	32.7	2,905	33.5	2,965	34.4	3,030	35.3	3,100	64,900	97%
Winchester 760	32.0	2,810	32.9	2,880	33.8	2,945	34.7	3,015	35.6	3,085	64,800	99%
Alliant Reloder 17	31.0	2,815	31.9	2,885	32.7	2,945	33.5	3,010	34.4	3,080	64,800	93%
Hodgdon H414	32.0	2,815	32.9	2,880	33.8	2,950	34.6	3,010	35.5	3,080	64,800	98%
IMR 7828	34.7	2,790	35.7	2,865	36.6	2,930	37.5	3,000	38.5	3,075	64,600	105%
IMR 4831	32.5	2,775	33.4	2,845	34.3	2,915	35.2	2,985	36.1	3,055	61,600	105%
Vihtavuori N550	30.6	2,795	31.5	2,860	32.3	2,915	33.1	2,975	34.0	3,040	64,900	97%
Hodgdon CFE 223	29.9	2,785	30.7	2,845	31.6	2,910	32.4	2,975	33.2	3,035	64,800	92%
Alliant Power Pro 2000-MR	30.0	2,760	30.8	2,820	31.6	2,885	32.5	2,950	33.3	3,010	64,600	95%
Hodgdon H4831SC	33.0	2,735	33.9	2,800	34.9	2,875	35.8	2,940	36.7	3,010	64,700	100%
Alliant Reloder 16	29.9	2,710	30.7	2,765	31.6	2,835	32.4	2,890	33.2	2,950	64,800	100%

.220 Swift

Winchester introduced the .220 Swift in 1935 for its Model 54 bolt-action rifle. Grosvenor Wotkyns had earlier experimented with a .250-3000 Savage case necked down to .22 caliber. His work influenced the project. Yet Winchester based its production cartridge on the semi-rimmed 6mm Lee Navy case necked down to .224 caliber. With a 48-grain bullet the Swift became the first factory-loaded rifle cartridge with a muzzle velocity above 4,000 fps. It became a standard chambering in the Model 70 when that rifle appeared in 1936. The Swift remained in the line until 1964.

The Swift is used mainly for varmint and predator shooting at long range. There its high velocity produces a flat trajectory. Early barrels gave it a reputation for rapid throat erosion. Shooters using modern stainless steel barrels have reported much longer accuracy life. Handloaders use bullets from about 40 to 75 grains. The .22-250 Remington has since become more popular. Even so Winchester and other ammunition makers continue to load the .220 Swift.

Cartridge specifications	
Bullet Diameter	**0.224" (5.69 mm)**
Max Case Length	**2.205" (56.01 mm)**
Case Trim Length	**2.195" (55.75 mm)**
Max COAL	**2.680" (68.07 mm)**
Primer Pocket	**Large Rifle**
Standard Twist	**1:14"**
Case Capacity	**47.0 gr H_2O**
Max Pressure	**62,000 psi (SAAMI)**

35 gr Bullet · 25" barrel

COAL: 2.635" • Bullet length: 0.725" • Seat depth: 0.295" • Usable capacity: 44.2 / 47.0 gr H_2O

Powder	STEP 1 · 90%		STEP 2		STEP 3		STEP 4		STEP 5 · LIMIT			
	gr	fps	gr	fps	gr	fps	gr	fps	gr	fps	psi	Fill
Hodgdon CFE BLK	32.0	4,225	32.9	4,315	33.8	4,405	34.6	4,480	35.5	4,565	61,800	83%
Hodgdon Leverevolution	39.0	4,120	40.1	4,220	41.1	4,310	42.2	4,410	43.3	4,515	61,700	94%
Alliant AR-Comp	35.0	4,150	36.0	4,240	37.0	4,335	37.9	4,415	38.9	4,505	61,900	94%
Hodgdon H4895	36.3	4,110	37.3	4,205	38.3	4,300	39.3	4,390	40.3	4,485	61,700	94%
Vihtavuori N540	38.3	4,105	39.3	4,195	40.4	4,290	41.5	4,390	42.5	4,480	62,000	102%
Reload Swiss RS40	33.8	4,095	34.7	4,185	35.6	4,270	36.6	4,360	37.5	4,445	61,900	90%
Vihtavuori N135	35.2	4,090	36.2	4,180	37.2	4,270	38.1	4,350	39.1	4,440	61,600	96%
Accurate 2460	35.9	4,065	36.9	4,150	37.9	4,240	38.9	4,330	39.9	4,420	61,600	90%
Vihtavuori N140	37.8	4,010	38.8	4,100	39.9	4,205	41.0	4,305	42.0	4,400	61,900	97%
Alliant Reloder 15	37.9	4,005	39.0	4,105	40.0	4,200	41.0	4,290	42.1	4,395	61,700	102%
Vihtavuori N133	33.8	4,045	34.8	4,135	35.7	4,220	36.6	4,300	37.6	4,395	61,600	98%
Hodgdon BL-C(2)	37.8	3,995	38.8	4,090	39.9	4,195	41.0	4,295	42.0	4,390	62,000	95%
Winchester 748	37.2	4,005	38.2	4,095	39.3	4,200	40.3	4,290	41.3	4,385	61,800	96%
IMR 8208 XBR	35.6	4,005	36.6	4,100	37.6	4,190	38.6	4,285	39.6	4,380	61,800	97%
Reload Swiss RS50	38.1	3,950	39.1	4,040	40.2	4,140	41.3	4,240	42.3	4,335	61,700	101%
IMR 4064	37.0	3,950	38.0	4,045	39.0	4,135	40.1	4,235	41.1	4,330	61,600	99%
Alliant Power Pro 2000-MR	38.9	3,925	40.0	4,025	41.0	4,115	42.1	4,215	43.2	4,320	61,700	103%
Accurate 2520	35.9	3,955	36.9	4,045	37.9	4,135	38.9	4,225	39.9	4,315	61,900	93%
Hodgdon Varget	36.5	3,900	37.5	3,995	38.5	4,090	39.6	4,200	40.6	4,295	61,800	95%
Vihtavuori N150	37.2	3,905	38.2	4,000	39.3	4,100	40.3	4,195	41.3	4,290	59,200	105%

40 gr Bullet · 25" barrel

COAL: 2.622" • Bullet length: 0.641" • Seat depth: 0.224" • Usable capacity: 44.9 / 47.0 gr H_2O

Powder	STEP 1 · 90%		STEP 2		STEP 3		STEP 4		STEP 5 · LIMIT			
	gr	fps	gr	fps	gr	fps	gr	fps	gr	fps	psi	Fill
Hodgdon Leverevolution	38.7	3,995	39.8	4,090	40.9	4,190	41.9	4,275	43.0	4,375	61,800	92%
Hodgdon CFE BLK	31.4	4,005	32.3	4,090	33.1	4,165	34.0	4,245	34.9	4,330	61,800	80%
Hodgdon H4895	35.8	3,965	36.8	4,055	37.8	4,140	38.8	4,230	39.8	4,320	61,600	92%
Vihtavuori N540	37.5	3,945	38.5	4,025	39.6	4,120	40.7	4,215	41.7	4,300	62,000	99%
Alliant AR-Comp	34.4	3,970	35.4	4,055	36.3	4,135	37.3	4,220	38.2	4,295	61,900	91%
Reload Swiss RS52	37.2	3,900	38.2	3,990	39.3	4,085	40.3	4,180	41.3	4,270	61,800	97%
Vihtavuori N550	40.3	3,885	41.4	3,980	42.5	4,070	43.7	4,175	44.8	4,270	59,300	105%
IMR 4895	36.5	3,905	37.5	3,990	38.5	4,080	39.5	4,170	40.5	4,260	61,800	93%
Vihtavuori N140	37.4	3,900	38.4	3,985	39.5	4,085	40.5	4,170	41.5	4,260	62,000	94%
Alliant Reloder 15	37.4	3,895	38.4	3,980	39.5	4,075	40.5	4,165	41.5	4,255	61,900	99%
Vihtavuori N135	34.6	3,925	35.5	4,000	36.5	4,085	37.5	4,170	38.4	4,250	61,900	93%
IMR 8208 XBR	35.1	3,875	36.1	3,965	37.0	4,045	38.0	4,130	39.0	4,220	61,800	94%
Alliant Power Pro 2000-MR	38.7	3,835	39.8	3,930	40.9	4,025	41.9	4,110	43.0	4,210	61,900	101%
IMR 4064	36.5	3,845	37.5	3,935	38.5	4,020	39.5	4,110	40.5	4,195	61,600	97%
IMR 3031	34.1	3,850	35.0	3,930	36.0	4,020	37.0	4,110	37.9	4,190	61,700	90%
Hodgdon Varget	36.2	3,815	37.2	3,905	38.2	3,995	39.2	4,085	40.2	4,175	61,700	93%
Alliant TS 15.5	36.8	3,800	37.8	3,890	38.8	3,980	39.9	4,080	40.9	4,170	61,900	98%
Accurate 2700	40.2	3,765	41.3	3,855	42.5	3,960	43.6	4,055	44.7	4,155	61,900	101%
Norma 203B	36.9	3,780	37.9	3,870	39.0	3,965	40.0	4,055	41.0	4,145	62,000	99%
Ramshot Big Game	38.9	3,750	40.0	3,845	41.0	3,930	42.1	4,020	43.2	4,115	61,800	98%

45 gr Bullet · 25" barrel

COAL: 2.589" • Bullet length: 0.608" • Seat depth: 0.224" • Usable capacity: 44.9 / 47.0 gr H_2O

Powder	STEP 1 · 90%		STEP 2		STEP 3		STEP 4		STEP 5 · LIMIT			
	gr	fps	gr	fps	gr	fps	gr	fps	gr	fps	psi	Fill
Hodgdon Leverevolution	38.1	3,865	39.1	3,950	40.2	4,040	41.3	4,135	42.3	4,220	61,900	90%
Vihtavuori N550	40.1	3,820	41.2	3,910	42.3	4,000	43.4	4,090	44.5	4,180	62,000	104%
Hodgdon H4895	35.1	3,815	36.1	3,900	37.0	3,975	38.0	4,065	39.0	4,150	61,800	90%
Reload Swiss RS52	36.6	3,770	37.6	3,860	38.7	3,955	39.7	4,040	40.7	4,130	61,900	95%
Hodgdon BL-C(2)	37.0	3,765	38.0	3,850	39.0	3,935	40.1	4,030	41.1	4,120	61,700	92%
Vihtavuori N540	36.5	3,780	37.5	3,860	38.5	3,940	39.6	4,030	40.6	4,115	62,000	96%
Winchester 748	36.3	3,760	37.3	3,845	38.3	3,930	39.3	4,015	40.3	4,105	61,800	92%
Vihtavuori N140	36.5	3,755	37.5	3,835	38.5	3,920	39.6	4,015	40.6	4,100	62,000	92%
Alliant Reloder 15	36.5	3,755	37.5	3,840	38.5	3,925	39.5	4,010	40.5	4,095	62,000	96%
Alliant AR-Comp	33.5	3,780	34.4	3,855	35.4	3,940	36.3	4,015	37.2	4,090	61,800	89%
Vihtavuori N150	36.5	3,730	37.5	3,810	38.5	3,895	39.6	3,990	40.6	4,075	61,800	101%
Alliant Power Pro 2000-MR	38.1	3,715	39.1	3,800	40.2	3,895	41.3	3,985	42.3	4,070	61,800	99%
IMR 8208 XBR	34.3	3,730	35.3	3,815	36.2	3,890	37.1	3,965	38.1	4,050	61,800	92%
Hodgdon Varget	35.6	3,705	36.6	3,790	37.5	3,870	38.5	3,955	39.5	4,045	61,900	91%
IMR 4064	35.6	3,710	36.6	3,795	37.6	3,880	38.6	3,965	39.6	4,045	61,800	94%
Vihtavuori N135	33.6	3,740	34.5	3,815	35.5	3,895	36.4	3,970	37.3	4,045	61,800	90%
Alliant Power Pro Varmint	34.8	3,710	35.8	3,795	36.8	3,880	37.7	3,955	38.7	4,040	61,800	91%
Accurate 2700	39.7	3,665	40.8	3,755	41.9	3,850	43.0	3,945	44.1	4,035	61,800	100%
Shooters World The Creed	36.7	3,660	37.7	3,745	38.8	3,835	39.8	3,920	40.8	4,010	62,000	94%
Winchester StaBALL Match	35.6	3,670	36.6	3,755	37.5	3,830	38.5	3,915	39.5	4,000	61,800	99%

50 gr Bullet · 25" barrel

COAL: 2.670" • Bullet length: 0.716" • Seat depth: 0.251" • Usable capacity: 44.6 / 47.0 gr H_2O

Powder	STEP 1 · 90%		STEP 2		STEP 3		STEP 4		STEP 5 · LIMIT			
	gr	fps	gr	fps	gr	fps	gr	fps	gr	fps	psi	Fill
Hodgdon Leverevolution	37.2	3,710	38.2	3,795	39.3	3,885	40.3	3,970	41.3	4,050	61,900	88%
Vihtavuori N550	38.7	3,655	39.8	3,745	40.9	3,830	41.9	3,910	43.0	4,000	61,800	101%
Reload Swiss RS52	35.8	3,635	36.8	3,715	37.8	3,800	38.8	3,885	39.8	3,970	62,000	94%
Hodgdon BL-C(2)	36.2	3,625	37.2	3,705	38.2	3,790	39.2	3,875	40.2	3,960	61,600	90%
Hodgdon H4895	34.1	3,645	35.0	3,720	36.0	3,800	37.0	3,885	37.9	3,960	61,700	88%
Winchester 748	35.5	3,620	36.5	3,700	37.5	3,785	38.4	3,860	39.4	3,945	61,900	91%
Hodgdon H380	38.2	3,580	39.3	3,670	40.3	3,750	41.4	3,845	42.4	3,925	62,000	101%
Vihtavuori N540	35.3	3,605	36.3	3,685	37.3	3,760	38.2	3,835	39.2	3,915	61,800	93%
Alliant Reloder 15	35.3	3,595	36.3	3,675	37.3	3,755	38.2	3,830	39.2	3,910	61,800	94%
Accurate 4064	35.6	3,570	36.6	3,655	37.5	3,730	38.5	3,815	39.5	3,900	62,000	98%
Winchester StaBALL 6.5	39.7	3,545	40.8	3,635	41.9	3,725	43.0	3,810	44.1	3,900	62,000	100%
Winchester 760	39.1	3,545	40.2	3,630	41.3	3,720	42.3	3,805	43.4	3,895	61,800	100%
Hodgdon H414	39.1	3,540	40.2	3,630	41.3	3,720	42.3	3,800	43.4	3,890	61,700	99%
Hodgdon Varget	34.7	3,565	35.7	3,650	36.6	3,725	37.5	3,800	38.5	3,885	61,900	90%
IMR 4064	34.6	3,565	35.5	3,640	36.5	3,720	37.5	3,800	38.4	3,875	61,800	92%
IMR 4320	35.0	3,540	36.0	3,625	37.0	3,710	37.9	3,785	38.9	3,870	61,600	88%
Shooters World The Creed	35.8	3,530	36.8	3,610	37.8	3,695	38.8	3,775	39.8	3,860	62,000	93%
Alliant Reloder 16	38.0	3,495	39.0	3,575	40.1	3,665	41.2	3,755	42.2	3,835	61,200	105%
Winchester StaBALL Match	34.7	3,515	35.7	3,595	36.7	3,680	37.6	3,750	38.6	3,835	61,900	97%
Alliant Power Pro 4000-MR	40.0	3,445	41.1	3,535	42.2	3,625	43.3	3,710	44.4	3,805	61,900	101%

55 gr Bullet · 25" barrel

COAL: 2.660" • Bullet length: 0.724" • Seat depth: 0.269" • Usable capacity: 44.4 / 47.0 gr H_2O

Powder	STEP 1 · 90%		STEP 2		STEP 3		STEP 4		STEP 5 · LIMIT			
	gr	fps	gr	fps	gr	fps	gr	fps	gr	fps	psi	Fill
Hodgdon Leverevolution	36.5	3,585	37.5	3,665	38.5	3,745	39.5	3,830	40.5	3,910	61,900	87%
Vihtavuori N550	37.6	3,520	38.6	3,595	39.7	3,680	40.8	3,765	41.8	3,840	61,800	99%
Reload Swiss RS52	35.1	3,510	36.1	3,590	37.0	3,665	38.0	3,745	39.0	3,830	61,700	92%
Hodgdon BL-C(2)	35.6	3,505	36.6	3,590	37.5	3,660	38.5	3,745	39.5	3,825	61,600	89%
Hodgdon H4895	33.3	3,500	34.2	3,575	35.1	3,650	36.1	3,730	37.0	3,805	61,700	86%
Winchester 748	34.7	3,485	35.7	3,570	36.7	3,650	37.6	3,720	38.6	3,805	61,800	89%
Hodgdon H4350	38.3	3,450	39.4	3,540	40.5	3,630	41.5	3,710	42.6	3,800	61,700	97%
Hodgdon H414	38.4	3,440	39.5	3,530	40.5	3,605	41.6	3,695	42.7	3,785	61,700	98%
Winchester 760	38.4	3,445	39.5	3,530	40.5	3,610	41.6	3,695	42.7	3,785	61,900	99%
Reload Swiss RS50	35.7	3,440	36.7	3,515	37.7	3,595	38.7	3,675	39.7	3,755	61,700	94%
Hodgdon Varget	33.9	3,440	34.9	3,525	35.8	3,595	36.8	3,680	37.7	3,750	62,000	88%
Vihtavuori N540	34.3	3,455	35.3	3,530	36.2	3,600	37.1	3,670	38.1	3,750	61,700	91%
Alliant Reloder 17	36.8	3,395	37.8	3,475	38.8	3,560	39.9	3,650	40.9	3,735	62,000	92%
IMR 4064	33.8	3,440	34.7	3,515	35.6	3,585	36.6	3,665	37.5	3,735	61,900	90%
Alliant Reloder 16	37.3	3,410	38.3	3,485	39.3	3,565	40.4	3,650	41.4	3,730	61,900	103%
Shooters World The Creed	35.0	3,410	36.0	3,490	37.0	3,570	37.9	3,645	38.9	3,725	61,600	91%
Norma 202	33.2	3,430	34.1	3,500	35.0	3,570	36.0	3,650	36.9	3,720	61,700	90%
Ramshot Big Game	36.7	3,400	37.7	3,480	38.8	3,565	39.8	3,640	40.8	3,720	61,700	94%
Alliant Power Pro 4000-MR	39.3	3,360	40.4	3,445	41.5	3,530	42.6	3,615	43.7	3,705	61,700	100%
Shooters World Long Rifle	35.8	3,335	36.8	3,415	37.8	3,495	38.8	3,575	39.8	3,655	61,900	98%

60 gr Bullet · 25" barrel

COAL: 2.680" • Bullet length: 0.804" • Seat depth: 0.329" • Usable capacity: 43.9 / 47.0 gr H_2O

Powder	STEP 1 · 90%		STEP 2		STEP 3		STEP 4		STEP 5 · LIMIT			
	gr	fps	gr	fps	gr	fps	gr	fps	gr	fps	psi	Fill
Hodgdon Leverevolution	35.5	3,445	36.5	3,525	37.5	3,605	38.4	3,675	39.4	3,755	61,700	86%
Reload Swiss RS52	34.3	3,385	35.3	3,465	36.2	3,535	37.1	3,610	38.1	3,690	61,900	91%
Hodgdon BL-C(2)	34.7	3,375	35.7	3,455	36.7	3,535	37.6	3,605	38.6	3,685	61,700	88%
Hodgdon H4350	37.4	3,355	38.4	3,435	39.5	3,525	40.5	3,605	41.5	3,685	61,700	95%
Vihtavuori N550	36.4	3,380	37.4	3,455	38.4	3,530	39.4	3,605	40.4	3,680	61,700	97%
Hodgdon SUPERFORMANCE	39.8	3,325	40.9	3,410	42.0	3,495	43.1	3,585	44.2	3,675	61,900	98%
Hodgdon H414	37.6	3,340	38.6	3,415	39.7	3,500	40.8	3,590	41.8	3,670	61,900	97%
Ramshot Hunter	38.8	3,335	39.9	3,420	41.0	3,505	42.0	3,585	43.1	3,670	62,000	104%
Hodgdon H380	36.5	3,355	37.5	3,430	38.5	3,510	39.5	3,585	40.5	3,665	61,800	98%
Winchester 760	37.5	3,335	38.5	3,410	39.6	3,495	40.7	3,580	41.7	3,660	61,700	98%
Winchester StaBALL 6.5	38.1	3,335	39.1	3,410	40.2	3,495	41.3	3,580	42.3	3,660	61,700	97%
Hodgdon Hybrid 100V	37.0	3,305	38.0	3,385	39.0	3,470	40.1	3,560	41.1	3,645	59,500	105%
Reload Swiss RS50	34.9	3,315	35.9	3,390	36.8	3,460	37.8	3,535	38.8	3,615	62,000	93%
Alliant Power Pro 4000-MR	38.5	3,265	39.6	3,350	40.6	3,425	41.7	3,510	42.8	3,600	61,800	99%
Norma MRP	39.6	3,250	40.7	3,335	41.8	3,420	42.9	3,505	44.0	3,590	61,800	104%
Ramshot Big Game	35.8	3,280	36.8	3,360	37.8	3,435	38.8	3,510	39.8	3,590	61,700	92%
IMR 4064	32.7	3,300	33.6	3,370	34.5	3,440	35.4	3,510	36.3	3,580	61,600	88%
Shooters World Precision Rifle	33.5	3,280	34.4	3,355	35.4	3,435	36.3	3,505	37.2	3,575	61,900	94%
Alliant Reloder 19	39.1	3,225	40.2	3,315	41.3	3,400	42.3	3,480	43.4	3,565	61,900	105%
Winchester StaBALL Match	33.2	3,260	34.1	3,330	35.0	3,400	36.0	3,480	36.9	3,550	61,700	94%

69 gr Bullet · 25" barrel

COAL: 2.570" • Bullet length: 0.931" • Seat depth: 0.565" • Usable capacity: 42.0 / 47.0 gr H_2O

Powder	STEP 1 · 90%		STEP 2		STEP 3		STEP 4		STEP 5 · LIMIT			
	gr	fps	gr	fps	gr	fps	gr	fps	gr	fps	psi	Fill
Hodgdon Leverevolution	33.6	3,230	34.5	3,300	35.5	3,380	36.4	3,450	37.3	3,520	61,800	85%
Alliant Reloder 26	39.5	3,175	40.6	3,260	41.7	3,340	42.8	3,425	43.9	3,515	61,600	105%
Hodgdon SUPERFORMANCE	37.9	3,170	39.0	3,255	40.0	3,330	41.0	3,405	42.1	3,495	61,900	98%
Hodgdon H4350	35.3	3,180	36.3	3,255	37.3	3,335	38.2	3,405	39.2	3,480	61,800	94%
Hodgdon Hybrid 100V	35.4	3,160	36.4	3,235	37.3	3,310	38.3	3,390	39.3	3,475	60,200	105%
Ramshot Hunter	36.8	3,155	37.8	3,230	38.8	3,305	39.9	3,390	40.9	3,470	61,600	103%
Hodgdon H414	35.6	3,155	36.6	3,230	37.6	3,305	38.6	3,385	39.6	3,460	61,600	96%
Winchester 760	35.6	3,155	36.6	3,230	37.6	3,305	38.6	3,380	39.6	3,460	61,800	97%
Hodgdon H380	34.5	3,155	35.5	3,230	36.4	3,300	37.3	3,365	38.3	3,445	61,900	97%
Vihtavuori N550	34.2	3,165	35.2	3,235	36.1	3,305	37.0	3,370	38.0	3,445	62,000	95%
Vihtavuori N555	37.0	3,130	38.0	3,205	39.0	3,285	40.1	3,370	41.1	3,445	59,900	105%
Alliant Reloder 17	34.2	3,125	35.2	3,205	36.1	3,275	37.0	3,345	38.0	3,430	61,900	91%
Accurate 4350	35.6	3,120	36.6	3,195	37.5	3,265	38.5	3,340	39.5	3,420	62,000	98%
IMR 7828SSC	38.1	3,090	39.1	3,165	40.2	3,250	41.3	3,335	42.3	3,415	61,600	105%
Alliant Reloder 19	37.2	3,085	38.2	3,160	39.3	3,245	40.3	3,325	41.3	3,405	61,900	104%
Hodgdon H4831SC	37.4	3,085	38.5	3,170	39.5	3,245	40.5	3,320	41.6	3,405	61,900	100%
Reload Swiss RS50	33.0	3,105	33.9	3,170	34.9	3,245	35.8	3,315	36.7	3,380	61,700	92%
Ramshot Big Game	33.9	3,090	34.9	3,165	35.8	3,230	36.8	3,305	37.7	3,375	61,700	91%
Alliant Reloder 15	31.3	3,100	32.2	3,170	33.0	3,230	33.9	3,300	34.8	3,370	61,900	88%
IMR 4451	34.5	3,035	35.5	3,115	36.4	3,185	37.3	3,255	38.3	3,330	61,600	95%

77 gr Bullet · 25" barrel

COAL: 2.680" • Bullet length: 1.066" • Seat depth: 0.591" • Usable capacity: 41.6 / 47.0 gr H_2O

Powder	STEP 1 · 90%		STEP 2		STEP 3		STEP 4		STEP 5 · LIMIT			
	gr	fps	gr	fps	gr	fps	gr	fps	gr	fps	psi	Fill
Alliant Reloder 26	38.5	3,065	39.6	3,145	40.6	3,220	41.7	3,300	42.8	3,385	61,800	103%
Hodgdon Hybrid 100V	34.8	3,055	35.8	3,130	36.8	3,210	37.7	3,280	38.7	3,360	61,800	104%
Alliant Reloder 23	36.3	3,055	37.3	3,130	38.3	3,200	39.3	3,275	40.3	3,350	60,800	105%
Hodgdon SUPERFORMANCE	36.8	3,040	37.8	3,115	38.8	3,190	39.9	3,270	40.9	3,345	61,700	96%
Vihtavuori N555	36.1	3,040	37.1	3,115	38.1	3,190	39.1	3,265	40.1	3,340	61,800	103%
Hodgdon Leverevolution	32.4	3,050	33.3	3,120	34.2	3,185	35.1	3,255	36.0	3,325	61,800	83%
Ramshot Hunter	35.8	3,020	36.8	3,095	37.8	3,165	38.8	3,240	39.8	3,315	61,800	101%
Alliant Reloder 22	36.8	3,000	37.8	3,075	38.8	3,150	39.9	3,230	40.9	3,310	61,700	104%
Hodgdon H4350	34.0	3,025	35.0	3,100	35.9	3,165	36.8	3,235	37.8	3,310	61,700	92%
Winchester 760	34.6	3,010	35.5	3,080	36.5	3,150	37.5	3,225	38.4	3,295	61,600	95%
Winchester StaBALL 6.5	35.1	3,005	36.1	3,075	37.0	3,140	38.0	3,215	39.0	3,285	61,900	94%
Alliant Reloder 19	36.2	2,975	37.2	3,050	38.2	3,125	39.2	3,200	40.2	3,275	61,700	102%
IMR 4955	35.8	2,975	36.8	3,050	37.8	3,120	38.8	3,200	39.8	3,275	61,900	96%
Alliant Reloder 17	33.2	2,985	34.1	3,055	35.0	3,125	36.0	3,200	36.9	3,270	61,600	89%
Hodgdon H4831SC	36.5	2,975	37.5	3,050	38.5	3,120	39.5	3,195	40.5	3,270	61,900	98%
Accurate 4350	34.5	2,980	35.5	3,055	36.4	3,120	37.3	3,190	38.3	3,265	61,900	96%
IMR 7828	37.3	2,935	38.3	3,005	39.3	3,080	40.4	3,160	41.4	3,235	61,800	100%
Accurate 4064	30.7	2,935	31.6	3,000	32.4	3,060	33.3	3,130	34.1	3,190	61,700	91%
IMR 4451	33.6	2,915	34.5	2,980	35.5	3,055	36.4	3,125	37.3	3,190	62,000	93%
Shooters World SW4350	35.5	2,910	36.5	2,980	37.5	3,055	38.4	3,120	39.4	3,190	61,800	103%

90 gr Bullet · 25" barrel

COAL: 2.680" • Bullet length: 1.206" • Seat depth: 0.731" • Usable capacity: 40.5 / 47.0 gr H_2O

Powder	STEP 1 · 90%		STEP 2		STEP 3		STEP 4		STEP 5 · LIMIT			
	gr	fps	gr	fps	gr	fps	gr	fps	gr	fps	psi	Fill
Alliant Reloder 26	36.7	2,885	37.7	2,955	38.8	3,035	39.8	3,105	40.8	3,180	62,000	101%
Vihtavuori N560	36.6	2,865	37.6	2,930	38.7	3,005	39.7	3,070	40.7	3,140	61,800	105%
Alliant Reloder 23	34.7	2,865	35.7	2,935	36.6	3,000	37.5	3,065	38.5	3,135	61,800	103%
Hodgdon SUPERFORMANCE	35.0	2,850	36.0	2,920	37.0	2,990	37.9	3,055	38.9	3,125	61,600	94%
Hodgdon H4831	35.6	2,835	36.6	2,905	37.6	2,975	38.6	3,050	39.6	3,120	60,100	105%
Alliant Reloder 22	35.0	2,820	36.0	2,890	37.0	2,965	37.9	3,030	38.9	3,100	61,700	102%
Vihtavuori N555	33.8	2,835	34.7	2,900	35.6	2,965	36.6	3,035	37.5	3,100	61,800	99%
Alliant Reloder 19	34.5	2,805	35.5	2,875	36.4	2,940	37.3	3,005	38.3	3,080	61,700	100%
Norma 204	34.0	2,795	35.0	2,870	35.9	2,930	36.8	2,995	37.8	3,070	61,600	98%
Hodgdon H4831SC	34.7	2,785	35.7	2,855	36.6	2,920	37.5	2,985	38.5	3,055	61,800	96%
Winchester 760	32.8	2,800	33.7	2,860	34.6	2,925	35.5	2,990	36.4	3,055	61,700	92%
Alliant Reloder 17	31.6	2,785	32.5	2,855	33.4	2,920	34.2	2,980	35.1	3,045	61,700	87%
Ramshot Magnum	38.2	2,750	39.3	2,825	40.3	2,895	41.4	2,975	42.4	3,045	60,100	105%
Reload Swiss RS76	38.0	2,760	39.0	2,825	40.1	2,900	41.2	2,975	42.2	3,045	59,300	105%
IMR 4350	32.4	2,785	33.3	2,845	34.2	2,910	35.1	2,975	36.0	3,040	61,600	95%
Winchester StaBALL 6.5	33.2	2,780	34.1	2,845	35.0	2,905	36.0	2,975	36.9	3,040	61,800	92%
IMR 7828	35.2	2,755	36.2	2,825	37.2	2,895	38.1	2,960	39.1	3,030	61,700	97%
Vihtavuori N165	35.4	2,755	36.4	2,820	37.3	2,885	38.3	2,950	39.3	3,020	61,900	104%
IMR 4451	31.9	2,720	32.8	2,785	33.6	2,840	34.5	2,905	35.4	2,970	61,900	91%
Alliant Reloder 16	30.7	2,705	31.6	2,765	32.4	2,825	33.3	2,885	34.1	2,940	61,700	93%

.222 Remington

Remington introduced the .222 Remington in 1950 with its Model 722 bolt-action rifle. Remington engineer Mike Walker developed the cartridge. He shot it in benchrest competition that year. Most cartridges of its era were modifications of an existing parent case. The .222 was instead an entirely new design.

The .222 Remington fires bullets of roughly 40 to 55 grains at about 3,000 to 3,500 fps. This makes it an effective varmint cartridge at short and medium ranges. It was a leading benchrest target cartridge from its introduction until the mid-1970s. At that point the 6mm PPC displaced it in competition. The .222 also served as the basis for several later cartridges. These include the .222 Remington Magnum, the .223 Remington (5.56x45mm NATO) and the .221 Remington Fireball. New American rifles are rarely chambered for it today. In Europe it remains popular. Makers such as Sako and Anschütz continue to offer rifles in this caliber.

Cartridge specifications	
Bullet Diameter	**0.224" (5.69 mm)**
Max Case Length	**1.700" (43.18 mm)**
Case Trim Length	**1.690" (42.93 mm)**
Max COAL	**2.130" (54.10 mm)**
Primer Pocket	**Small Rifle**
Standard Twist	**1:14"**
Case Capacity	**27.2 gr H_2O**
Max Pressure	**50,000 psi (SAAMI)**

35 gr Bullet · 25" barrel

COAL: 2.025" • Bullet length: 0.710" • Seat depth: 0.385" • Usable capacity: 23.7 / 27.2 gr H_2O

Powder	STEP 1 · 90%		STEP 2		STEP 3		STEP 4		STEP 5 · LIMIT			
	gr	fps	gr	fps	gr	fps	gr	fps	gr	fps	psi	Fill
Shooters World SBR-SOCOM	17.8	3,515	18.3	3,595	18.8	3,675	19.3	3,750	19.8	3,830	49,900	86%
Alliant Power Pro 300-MP	16.2	3,460	16.6	3,525	17.1	3,610	17.6	3,690	18.0	3,750	49,800	84%
Accurate 1680	19.0	3,415	19.5	3,485	20.1	3,570	20.6	3,640	21.1	3,715	50,000	92%
Vihtavuori N120	18.1	3,355	18.6	3,430	19.1	3,505	19.6	3,575	20.1	3,650	49,700	99%
Hodgdon H4198	19.1	3,280	19.6	3,355	20.1	3,430	20.7	3,515	21.2	3,590	49,600	103%
Alliant Reloder 7	19.7	3,260	20.3	3,345	20.8	3,415	21.3	3,490	21.9	3,575	49,600	98%
Alliant Power Pro 1200-R	21.2	3,215	21.8	3,300	22.4	3,380	23.0	3,465	23.6	3,550	49,900	102%
Shooters World AR Plus	21.6	3,195	22.2	3,280	22.8	3,360	23.4	3,445	24.0	3,525	49,700	103%
Hodgdon CFE BLK	18.2	3,200	18.7	3,275	19.2	3,345	19.7	3,415	20.2	3,490	49,800	88%
Accurate 2015	21.2	3,155	21.8	3,240	22.4	3,320	23.0	3,405	23.6	3,485	49,600	104%
Shooters World The Patriot	21.4	3,160	22.0	3,240	22.6	3,320	23.2	3,400	23.8	3,480	47,200	105%
Accurate LT-32	20.2	3,155	20.8	3,240	21.3	3,305	21.8	3,375	22.4	3,460	49,800	104%
Accurate LT-30	19.0	3,155	19.5	3,225	20.1	3,310	20.6	3,380	21.1	3,450	49,600	90%
Hodgdon H322	21.0	3,085	21.6	3,165	22.1	3,235	22.7	3,315	23.3	3,400	47,700	105%

40 gr Bullet · 25" barrel

COAL: 2.117" • Bullet length: 0.641" • Seat depth: 0.224" • Usable capacity: 25.1 / 27.2 gr H_2O

Powder	STEP 1 · 90%		STEP 2		STEP 3		STEP 4		STEP 5 · LIMIT			
	gr	fps	gr	fps	gr	fps	gr	fps	gr	fps	psi	Fill
Shooters World SBR-SOCOM	17.9	3,385	18.4	3,460	18.9	3,535	19.4	3,610	19.9	3,680	50,000	82%
Accurate 1680	19.2	3,295	19.7	3,360	20.3	3,440	20.8	3,510	21.3	3,575	50,000	87%
Reload Swiss RS40	22.2	3,230	22.8	3,305	23.4	3,385	24.1	3,475	24.7	3,555	49,600	105%
Vihtavuori N120	18.3	3,250	18.8	3,320	19.3	3,390	19.8	3,455	20.3	3,525	49,600	94%
Accurate 2230	23.2	3,215	23.9	3,295	24.5	3,365	25.1	3,440	25.8	3,520	50,000	104%
Ramshot X-Terminator	23.0	3,205	23.6	3,275	24.3	3,355	25.0	3,440	25.6	3,515	49,900	103%
Alliant Power Pro 1200-R	21.5	3,200	22.1	3,275	22.7	3,355	23.3	3,430	23.9	3,510	49,700	97%
Accurate 2460	23.6	3,195	24.3	3,280	24.9	3,350	25.6	3,435	26.2	3,505	48,100	105%
Hodgdon H4198	19.4	3,225	19.9	3,290	20.4	3,360	21.0	3,440	21.5	3,505	49,700	98%
Alliant Reloder 7	19.9	3,205	20.4	3,270	21.0	3,350	21.6	3,425	22.1	3,495	49,600	94%
Shooters World AR Plus	22.0	3,185	22.6	3,260	23.2	3,335	23.8	3,415	24.4	3,490	49,500	98%
Shooters World The Patriot	22.1	3,175	22.7	3,250	23.4	3,335	24.0	3,410	24.6	3,485	49,500	102%
Vihtavuori N130	20.2	3,185	20.8	3,265	21.3	3,330	21.8	3,395	22.4	3,475	49,700	102%
IMR 4198	19.3	3,190	19.8	3,255	20.4	3,335	20.9	3,400	21.4	3,470	49,900	103%
Accurate 2200	20.8	3,170	21.4	3,245	22.0	3,325	22.5	3,390	23.1	3,465	50,000	104%
Accurate 2015	21.7	3,145	22.3	3,220	22.9	3,300	23.5	3,375	24.1	3,450	49,800	100%
Hodgdon H322	21.7	3,115	22.3	3,195	22.9	3,270	23.5	3,345	24.1	3,425	49,600	102%
Alliant Reloder 10x	20.6	3,110	21.2	3,190	21.8	3,270	22.3	3,335	22.9	3,415	49,800	103%
Accurate LT-32	20.5	3,110	21.1	3,185	21.6	3,250	22.2	3,330	22.8	3,405	49,900	100%
IMR 3031	22.1	3,065	22.7	3,140	23.4	3,225	24.0	3,300	24.6	3,380	48,800	105%

50 gr Bullet · 25" barrel

COAL: 2.110" • Bullet length: 0.723" • Seat depth: 0.313" • Usable capacity: 24.2 / 27.2 gr H_2O

Powder	STEP 1 · 90%		STEP 2		STEP 3		STEP 4		STEP 5 · LIMIT			
	gr	fps	gr	fps	gr	fps	gr	fps	gr	fps	psi	Fill
Alliant AR-Comp	21.2	3,000	21.8	3,070	22.4	3,140	23.0	3,215	23.6	3,285	48,000	105%
Reload Swiss RS40	21.0	2,990	21.6	3,065	22.1	3,125	22.7	3,200	23.3	3,270	50,000	102%
Accurate 2460	22.1	2,955	22.7	3,025	23.3	3,095	23.9	3,160	24.5	3,230	49,800	102%
Hodgdon Leverevolution	23.9	2,930	24.5	2,995	25.2	3,080	25.9	3,160	26.5	3,230	49,900	105%
Alliant Power Pro 1200-R	20.1	2,950	20.7	3,020	21.2	3,085	21.8	3,155	22.3	3,220	49,600	94%
Norma 200	19.7	2,935	20.3	3,010	20.8	3,075	21.3	3,135	21.9	3,215	49,800	98%
Shooters World AR Plus	20.7	2,930	21.3	3,000	21.9	3,075	22.4	3,135	23.0	3,210	49,900	96%
Accurate 2230	21.4	2,920	22.0	2,990	22.6	3,055	23.2	3,125	23.8	3,195	49,900	100%
Ramshot X-Terminator	21.2	2,915	21.8	2,980	22.4	3,050	22.9	3,105	23.5	3,175	49,700	98%
Accurate 2015	20.4	2,885	21.0	2,960	21.5	3,020	22.1	3,095	22.7	3,170	50,000	97%
Alliant Reloder 7	18.5	2,905	19.0	2,970	19.6	3,045	20.1	3,110	20.6	3,170	50,000	90%
IMR 3031	21.0	2,885	21.6	2,955	22.1	3,020	22.7	3,090	23.3	3,165	49,900	103%
Hodgdon H322	20.4	2,880	21.0	2,950	21.5	3,015	22.1	3,090	22.7	3,160	49,900	100%
Vihtavuori N130	18.7	2,895	19.2	2,960	19.8	3,035	20.3	3,095	20.8	3,160	49,600	99%
Vihtavuori N135	21.0	2,890	21.6	2,960	22.1	3,015	22.7	3,085	23.3	3,155	47,200	105%
Alliant Reloder 10x	19.4	2,880	19.9	2,945	20.4	3,005	21.0	3,085	21.5	3,145	49,900	100%
Hodgdon H335	21.3	2,835	21.9	2,905	22.5	2,975	23.1	3,045	23.7	3,115	49,800	97%
IMR 4198	17.7	2,855	18.2	2,920	18.7	2,980	19.2	3,045	19.7	3,105	49,800	98%
IMR 4895	22.1	2,830	22.7	2,895	23.3	2,965	23.9	3,035	24.5	3,105	47,400	105%
Hodgdon Benchmark	20.7	2,825	21.3	2,900	21.9	2,970	22.4	3,030	23.0	3,100	47,400	105%

55 gr Bullet · 25" barrel

COAL: 2.125" • Bullet length: 0.724" • Seat depth: 0.299" • Usable capacity: 24.4 / 27.2 gr H_2O

Powder	STEP 1 · 90%		STEP 2		STEP 3		STEP 4		STEP 5 · LIMIT			
	gr	fps	gr	fps	gr	fps	gr	fps	gr	fps	psi	Fill
Hodgdon H4895	22.1	2,920	22.7	2,990	23.4	3,070	24.0	3,140	24.6	3,210	48,000	105%
Alliant AR-Comp	21.2	2,940	21.8	3,005	22.4	3,075	22.9	3,130	23.5	3,200	49,800	103%
Hodgdon Leverevolution	23.6	2,865	24.3	2,940	24.9	3,010	25.6	3,090	26.2	3,155	49,900	103%
Reload Swiss RS40	20.6	2,885	21.2	2,955	21.8	3,025	22.3	3,085	22.9	3,155	49,500	100%
Vihtavuori N530	21.4	2,880	22.0	2,950	22.6	3,015	23.2	3,085	23.8	3,155	48,900	105%
Alliant Power Pro 1200-R	19.7	2,850	20.3	2,920	20.8	2,980	21.3	3,040	21.9	3,110	49,600	92%
Accurate 2460	21.5	2,840	22.1	2,905	22.7	2,975	23.3	3,040	23.9	3,105	49,700	98%
Vihtavuori N135	21.0	2,845	21.6	2,910	22.1	2,970	22.7	3,035	23.3	3,105	49,600	104%
IMR 8208 XBR	21.2	2,810	21.8	2,880	22.4	2,945	22.9	3,005	23.5	3,075	48,600	105%
Shooters World The Patriot	20.4	2,810	21.0	2,880	21.5	2,935	22.1	3,005	22.7	3,070	50,000	97%
Accurate 2015	20.2	2,805	20.8	2,875	21.3	2,935	21.8	2,995	22.4	3,065	49,900	95%
Hodgdon H322	20.2	2,805	20.8	2,875	21.3	2,935	21.8	2,995	22.4	3,065	49,900	98%
Accurate 2230	20.8	2,800	21.4	2,865	22.0	2,930	22.5	2,985	23.1	3,050	49,700	96%
Alliant Reloder 10x	19.1	2,795	19.6	2,855	20.1	2,915	20.7	2,990	21.2	3,050	49,900	98%
Hodgdon Benchmark	20.6	2,785	21.2	2,855	21.8	2,920	22.3	2,980	22.9	3,050	49,500	104%
Vihtavuori N130	18.4	2,800	18.9	2,860	19.4	2,920	19.9	2,980	20.4	3,045	49,700	96%
Hodgdon H335	21.1	2,770	21.7	2,840	22.3	2,905	22.8	2,965	23.4	3,030	49,900	95%
Shooters World Match Rifle	22.0	2,755	22.6	2,825	23.2	2,890	23.8	2,960	24.4	3,030	49,800	103%
Shooters World Tactical Rifle	20.6	2,720	21.2	2,790	21.8	2,855	22.3	2,915	22.9	2,985	49,700	97%
IMR 4198	17.3	2,735	17.8	2,795	18.3	2,860	18.7	2,910	19.2	2,970	49,700	95%

60 gr Bullet · 25" barrel

COAL: 2.125" • Bullet length: 0.800" • Seat depth: 0.375" • Usable capacity: 23.7 / 27.2 gr H_2O

Powder	STEP 1 · 90%		STEP 2		STEP 3		STEP 4		STEP 5 · LIMIT			
	gr	fps	gr	fps	gr	fps	gr	fps	gr	fps	psi	Fill
Hodgdon H4895	21.6	2,835	22.2	2,905	22.8	2,975	23.4	3,040	24.0	3,110	49,500	105%
Alliant AR-Comp	20.3	2,790	20.9	2,860	21.5	2,925	22.0	2,985	22.6	3,050	49,900	102%
Vihtavuori N530	20.7	2,785	21.3	2,855	21.9	2,920	22.4	2,980	23.0	3,050	49,700	104%
Hodgdon Leverevolution	22.8	2,760	23.4	2,825	24.1	2,900	24.7	2,970	25.3	3,035	49,700	102%
Reload Swiss RS40	19.9	2,765	20.4	2,820	21.0	2,890	21.6	2,960	22.1	3,020	49,500	99%
Alliant Power Pro 1200-R	19.0	2,730	19.5	2,785	20.1	2,860	20.6	2,915	21.1	2,975	49,800	91%
IMR 8208 XBR	20.5	2,710	21.1	2,775	21.6	2,835	22.2	2,900	22.8	2,970	49,800	104%
Alliant Power Pro Varmint	21.1	2,705	21.7	2,770	22.3	2,840	22.8	2,895	23.4	2,965	49,800	104%
IMR 4895	21.3	2,695	21.9	2,760	22.5	2,830	23.1	2,895	23.7	2,965	49,600	103%
Vihtavuori N135	20.2	2,720	20.8	2,785	21.3	2,840	21.8	2,895	22.4	2,965	49,700	103%
Accurate 2460	20.6	2,710	21.2	2,775	21.8	2,840	22.3	2,890	22.9	2,960	49,700	97%
Hodgdon H322	19.4	2,675	19.9	2,735	20.5	2,805	21.1	2,875	21.6	2,935	49,900	97%
Accurate 2015	19.4	2,670	19.9	2,730	20.5	2,800	21.1	2,870	21.6	2,930	49,700	95%
Shooters World Match Rifle	21.2	2,645	21.8	2,715	22.4	2,780	23.0	2,850	23.6	2,915	49,800	103%
Hodgdon H335	20.3	2,650	20.9	2,715	21.5	2,785	22.0	2,840	22.6	2,910	49,900	94%
Accurate 2230	19.9	2,665	20.4	2,715	21.0	2,780	21.6	2,845	22.1	2,900	49,700	94%
Vihtavuori N130	17.6	2,660	18.1	2,720	18.6	2,780	19.1	2,840	19.6	2,900	49,800	95%
IMR 4320	21.6	2,620	22.2	2,690	22.8	2,760	23.4	2,825	24.0	2,895	49,500	102%
Ramshot X-Terminator	19.7	2,655	20.3	2,720	20.8	2,775	21.3	2,830	21.9	2,895	49,800	94%
IMR 4198	16.6	2,600	17.1	2,660	17.5	2,710	17.9	2,755	18.4	2,815	49,800	93%

.222 Remington Magnum

Remington developed the .222 Remington Magnum in 1957 and introduced it commercially in 1958. It was created by lengthening the case and shortening the neck of the .222 Remington. This gave it more powder capacity and moderately higher velocities than its parent. The cartridge grew out of the U.S. Army's small-caliber high-velocity rifle program. The military did not adopt it and chose the shorter .223 Remington instead. Remington chambered the new round in its Model 722 bolt-action rifle from 1958 to 1962.

Factory loads typically drove 40-grain bullets at about 3,800 fps and 50-grain bullets at about 3,475 fps. Loads with 55-grain bullets were also offered. The cartridge was well regarded for accuracy in varmint and benchrest rifles. Yet the commercial success of the .223 Remington left it largely obsolete in the United States. Rifles are now made only in small numbers. Most shooters rely on handloading. The .222 Remington Magnum case also served as the parent of the .204 Ruger. That cartridge was introduced in 2004.

Cartridge specifications	
Bullet Diameter	**0.224" (5.69 mm)**
Max Case Length	**1.850" (46.99 mm)**
Case Trim Length	**1.840" (46.74 mm)**
Max COAL	**2.280" (57.91 mm)**
Primer Pocket	**Small Rifle**
Standard Twist	**1:14"**
Case Capacity	**30.8 gr H_2O**
Max Pressure	**55,000 psi (SAAMI)**

40 gr Bullet · 25" barrel

COAL: 2.170" • Bullet length: 0.641" • Seat depth: 0.321" • Usable capacity: 27.8 / 30.8 gr H_2O

Powder	STEP 1 · 90%		STEP 2		STEP 3		STEP 4		STEP 5 · LIMIT			
	gr	fps	gr	fps	gr	fps	gr	fps	gr	fps	psi	Fill
Hodgdon CFE BLK	23.7	3,725	24.4	3,810	25.0	3,885	25.6	3,960	26.3	4,050	55,000	97%
Shooters World SBR-SOCOM	20.3	3,655	20.9	3,740	21.4	3,810	21.9	3,880	22.5	3,960	54,700	83%
Alliant Power Pro 300-MP	18.4	3,565	18.9	3,635	19.4	3,705	19.9	3,775	20.4	3,845	54,700	81%
Accurate 1680	21.6	3,535	22.2	3,615	22.8	3,690	23.4	3,760	24.0	3,840	54,500	89%
Alliant Power Pro 1200-R	24.3	3,500	25.0	3,585	25.6	3,660	26.3	3,745	27.0	3,830	54,700	99%
Norma 200	24.0	3,490	24.7	3,575	25.4	3,665	26.0	3,740	26.7	3,830	55,000	104%
Ramshot X-Terminator	25.9	3,490	26.6	3,570	27.4	3,660	28.1	3,745	28.8	3,825	53,300	105%
Reload Swiss RS40	24.7	3,490	25.4	3,570	26.0	3,645	26.7	3,730	27.4	3,820	54,500	104%
Shooters World AR Plus	24.8	3,480	25.5	3,560	26.2	3,645	26.9	3,730	27.6	3,820	54,700	100%
Hodgdon H4198	22.1	3,510	22.7	3,590	23.3	3,665	23.9	3,740	24.5	3,815	54,800	101%
Accurate 2015	24.8	3,470	25.5	3,555	26.2	3,640	26.9	3,725	27.6	3,810	54,500	103%
Alliant Reloder 7	22.6	3,490	23.2	3,565	23.9	3,650	24.5	3,725	25.1	3,800	54,800	96%
Shooters World The Patriot	25.0	3,460	25.7	3,540	26.4	3,625	27.1	3,705	27.8	3,790	54,600	104%
Vihtavuori N130	22.9	3,475	23.5	3,550	24.1	3,625	24.8	3,715	25.4	3,790	51,600	105%
Vihtavuori N120	20.4	3,465	21.0	3,545	21.5	3,605	22.1	3,685	22.7	3,760	54,800	95%
IMR 4198	21.5	3,415	22.1	3,490	22.7	3,565	23.3	3,640	23.9	3,710	54,800	103%
Accurate LT-32	23.2	3,390	23.9	3,475	24.5	3,545	25.1	3,620	25.8	3,705	54,600	102%
Hodgdon H322	24.2	3,370	24.9	3,455	25.5	3,530	26.2	3,615	26.9	3,700	54,700	103%
Alliant Reloder 10x	23.0	3,365	23.6	3,440	24.3	3,530	24.9	3,605	25.5	3,680	54,500	103%
Hodgdon H335	25.2	3,310	25.9	3,390	26.6	3,475	27.3	3,560	28.0	3,640	54,700	99%

45 gr Bullet · 25" barrel

COAL: 2.206" • Bullet length: 0.580" • Seat depth: 0.224" • Usable capacity: 28.7 / 30.8 gr H_2O

Powder	STEP 1 · 90%		STEP 2		STEP 3		STEP 4		STEP 5 · LIMIT			
	gr	fps	gr	fps	gr	fps	gr	fps	gr	fps	psi	Fill
Hodgdon CFE BLK	23.5	3,560	24.1	3,630	24.8	3,710	25.5	3,795	26.1	3,865	54,500	94%
Accurate 2460	26.8	3,440	27.6	3,525	28.3	3,600	29.1	3,690	29.8	3,770	54,900	104%
Accurate 2230	26.2	3,425	26.9	3,500	27.6	3,575	28.4	3,660	29.1	3,735	54,700	103%
Vihtavuori N130	23.2	3,420	23.9	3,500	24.5	3,570	25.1	3,640	25.8	3,725	54,600	103%
Alliant Power Pro 1200-R	24.2	3,405	24.9	3,485	25.5	3,555	26.2	3,635	26.9	3,720	54,900	96%
Hodgdon Leverevolution	28.4	3,375	29.2	3,465	29.9	3,540	30.7	3,630	31.5	3,720	53,900	105%
Reload Swiss RS40	24.7	3,395	25.4	3,475	26.0	3,545	26.7	3,630	27.4	3,710	54,600	101%
Accurate 2015	24.9	3,385	25.6	3,465	26.3	3,545	27.0	3,625	27.7	3,705	54,800	100%
Norma 200	23.8	3,395	24.4	3,465	25.1	3,550	25.8	3,635	26.4	3,705	54,600	100%
Hodgdon H4895	26.1	3,370	26.8	3,450	27.6	3,540	28.3	3,620	29.0	3,700	54,600	105%
Ramshot X-Terminator	25.7	3,385	26.4	3,460	27.1	3,535	27.9	3,620	28.6	3,700	54,500	101%
Shooters World The Patriot	24.9	3,350	25.6	3,430	26.3	3,505	27.0	3,585	27.7	3,665	54,500	100%
Alliant Reloder 7	22.4	3,365	23.0	3,435	23.6	3,505	24.3	3,585	24.9	3,655	54,700	92%
Hodgdon H322	24.2	3,290	24.9	3,370	25.5	3,440	26.2	3,520	26.9	3,605	54,700	100%
Accurate LT-32	23.2	3,290	23.9	3,370	24.5	3,440	25.1	3,510	25.8	3,595	54,700	99%
Ramshot TAC	25.4	3,285	26.1	3,360	26.8	3,440	27.5	3,520	28.2	3,595	52,300	105%
Accurate 2495	25.8	3,260	26.5	3,340	27.3	3,430	28.0	3,510	28.7	3,590	54,900	101%
Alliant Reloder 10x	23.0	3,285	23.6	3,360	24.3	3,440	24.9	3,515	25.5	3,585	54,700	100%
IMR 3031	24.6	3,255	25.3	3,335	26.0	3,415	26.6	3,485	27.3	3,565	55,000	102%
Hodgdon H335	25.2	3,245	25.9	3,325	26.6	3,400	27.3	3,480	28.0	3,560	54,700	97%

50 gr Bullet · 25" barrel

COAL: 2.250" • Bullet length: 0.713" • Seat depth: 0.313" • Usable capacity: 27.9 / 30.8 gr H_2O

Powder	STEP 1 · 90%		STEP 2		STEP 3		STEP 4		STEP 5 · LIMIT			
	gr	fps	gr	fps	gr	fps	gr	fps	gr	fps	psi	Fill
Hodgdon CFE BLK	22.6	3,370	23.2	3,435	23.9	3,520	24.5	3,585	25.1	3,655	54,500	93%
Alliant AR-Comp	24.6	3,305	25.3	3,380	26.0	3,455	26.6	3,525	27.3	3,600	53,600	105%
Hodgdon Leverevolution	27.5	3,255	28.3	3,340	29.1	3,430	29.8	3,505	30.6	3,595	54,800	105%
Accurate 2460	25.7	3,275	26.4	3,350	27.1	3,425	27.8	3,500	28.5	3,580	54,700	102%
Hodgdon H4895	25.2	3,240	25.9	3,315	26.6	3,395	27.3	3,470	28.0	3,550	54,900	104%
Accurate 2230	25.0	3,245	25.7	3,315	26.4	3,390	27.1	3,465	27.8	3,540	54,600	101%
Alliant Power Pro 1200-R	23.2	3,240	23.9	3,320	24.5	3,390	25.1	3,460	25.8	3,540	54,600	94%
Reload Swiss RS40	23.8	3,240	24.4	3,310	25.1	3,390	25.8	3,470	26.4	3,535	54,600	101%
Ramshot X-Terminator	24.7	3,225	25.4	3,300	26.0	3,365	26.7	3,440	27.4	3,515	54,700	100%
Accurate 2200	22.9	3,225	23.5	3,290	24.1	3,360	24.8	3,440	25.4	3,510	54,900	103%
Shooters World The Patriot	24.0	3,195	24.7	3,275	25.4	3,350	26.0	3,415	26.7	3,495	55,000	100%
Ramshot TAC	24.7	3,165	25.4	3,240	26.0	3,305	26.7	3,385	27.4	3,460	53,300	105%
Accurate 2495	24.8	3,125	25.5	3,205	26.2	3,280	26.9	3,360	27.6	3,440	54,500	100%
IMR 4895	25.4	3,135	26.1	3,210	26.8	3,285	27.5	3,365	28.2	3,440	54,700	105%
Alliant Power Pro Varmint	24.9	3,125	25.6	3,205	26.3	3,280	27.0	3,355	27.7	3,435	53,100	105%
Alliant Reloder 10x	22.1	3,135	22.7	3,205	23.4	3,290	24.0	3,360	24.6	3,430	54,800	100%
Accurate LT-32	22.3	3,130	22.9	3,200	23.6	3,280	24.2	3,350	24.8	3,415	54,500	98%
Shooters World Tactical Rifle	24.3	3,115	25.0	3,190	25.6	3,255	26.3	3,335	27.0	3,415	55,000	100%
IMR 3031	23.6	3,115	24.3	3,190	24.9	3,260	25.6	3,340	26.2	3,410	54,600	100%
Hodgdon H335	24.3	3,110	25.0	3,185	25.6	3,250	26.3	3,325	27.0	3,405	54,700	96%

55 gr Bullet · 25" barrel

COAL: 2.260" • Bullet length: 0.724" • Seat depth: 0.314" • Usable capacity: 27.8 / 30.8 gr H_2O

Powder	STEP 1 · 90%		STEP 2		STEP 3		STEP 4		STEP 5 · LIMIT			
	gr	fps	gr	fps	gr	fps	gr	fps	gr	fps	psi	Fill
Hodgdon Leverevolution	27.1	3,170	27.9	3,255	28.6	3,325	29.4	3,415	30.1	3,490	54,900	103%
Hodgdon CFE BLK	22.1	3,215	22.7	3,280	23.3	3,350	23.9	3,415	24.5	3,485	54,400	91%
Alliant AR-Comp	24.1	3,175	24.8	3,250	25.5	3,325	26.1	3,390	26.8	3,465	54,600	103%
Vihtavuori N530	24.4	3,160	25.1	3,240	25.8	3,315	26.4	3,380	27.1	3,455	54,200	105%
Hodgdon H4895	24.7	3,135	25.4	3,210	26.0	3,275	26.7	3,350	27.4	3,425	54,900	102%
Accurate 2460	24.9	3,130	25.6	3,205	26.3	3,275	27.0	3,350	27.7	3,420	54,500	100%
Reload Swiss RS40	23.3	3,115	23.9	3,185	24.6	3,260	25.3	3,335	25.9	3,405	54,700	99%
Vihtavuori N135	24.2	3,125	24.9	3,195	25.5	3,260	26.2	3,335	26.9	3,405	52,500	105%
Shooters World AR Plus	23.5	3,110	24.1	3,175	24.8	3,250	25.5	3,330	26.1	3,395	54,900	95%
Accurate 2230	24.3	3,105	25.0	3,175	25.6	3,235	26.3	3,310	27.0	3,380	54,900	98%
Ramshot TAC	24.5	3,080	25.2	3,155	25.9	3,230	26.5	3,295	27.2	3,370	54,900	104%
IMR 8208 XBR	24.2	3,070	24.9	3,145	25.5	3,210	26.2	3,285	26.9	3,360	52,700	105%
Ramshot X-Terminator	23.9	3,075	24.6	3,150	25.3	3,220	25.9	3,285	26.6	3,355	54,800	97%
Shooters World Match Rifle	25.3	3,050	26.0	3,125	26.7	3,200	27.4	3,275	28.1	3,355	54,700	104%
Winchester 748	25.5	3,055	26.2	3,130	26.9	3,205	27.6	3,280	28.3	3,355	53,100	105%
Hodgdon Benchmark	23.8	3,070	24.4	3,135	25.1	3,210	25.8	3,285	26.4	3,350	53,300	105%
Hodgdon Varget	25.2	3,035	25.9	3,110	26.6	3,185	27.3	3,265	28.0	3,340	53,100	105%
Alliant Reloder 10x	21.7	3,030	22.3	3,100	22.9	3,165	23.5	3,235	24.1	3,305	54,900	98%
Hodgdon H335	23.9	3,010	24.5	3,075	25.2	3,150	25.9	3,225	26.5	3,285	54,800	94%
Accurate LT-32	21.9	3,015	22.5	3,080	23.1	3,150	23.7	3,215	24.3	3,280	54,600	96%

60 gr Bullet · 25" barrel

COAL: 2.280" • Bullet length: 0.800" • Seat depth: 0.370" • Usable capacity: 27.3 / 30.8 gr H_2O

Powder	STEP 1 · 90%		STEP 2		STEP 3		STEP 4		STEP 5 · LIMIT			
	gr	fps	gr	fps	gr	fps	gr	fps	gr	fps	psi	Fill
Hodgdon Leverevolution	26.4	3,060	27.1	3,130	27.9	3,215	28.6	3,290	29.3	3,360	54,800	102%
Hodgdon CFE BLK	21.4	3,055	22.0	3,120	22.6	3,185	23.2	3,250	23.8	3,320	54,900	90%
Vihtavuori N530	23.6	3,040	24.3	3,115	24.9	3,180	25.6	3,255	26.2	3,320	54,800	103%
Alliant AR-Comp	23.3	3,025	23.9	3,090	24.6	3,160	25.3	3,235	25.9	3,300	54,700	102%
Vihtavuori N135	23.8	3,025	24.4	3,090	25.1	3,160	25.8	3,235	26.4	3,295	54,700	105%
Hodgdon H4895	23.9	3,000	24.6	3,075	25.3	3,150	25.9	3,215	26.6	3,285	54,900	101%
Vihtavuori N140	25.3	2,980	26.0	3,055	26.7	3,125	27.4	3,200	28.1	3,275	54,700	105%
Winchester 748	25.1	2,975	25.8	3,050	26.5	3,125	27.2	3,200	27.9	3,275	54,900	105%
Accurate 2460	24.1	2,995	24.8	3,065	25.5	3,135	26.1	3,195	26.8	3,270	54,900	98%
IMR 8208 XBR	23.8	2,985	24.4	3,050	25.1	3,125	25.8	3,195	26.4	3,260	54,800	105%
Hodgdon Varget	24.8	2,965	25.5	3,040	26.1	3,105	26.8	3,180	27.5	3,255	54,600	105%
Alliant Power Pro 1200-R	22.0	2,985	22.6	3,055	23.2	3,120	23.8	3,185	24.4	3,250	54,900	91%
Hodgdon Benchmark	23.2	2,965	23.9	3,035	24.5	3,100	25.1	3,165	25.8	3,240	54,900	104%
Ramshot TAC	23.8	2,955	24.4	3,015	25.1	3,090	25.8	3,165	26.4	3,230	54,600	103%
Alliant Power Pro Varmint	24.0	2,935	24.7	3,010	25.4	3,080	26.0	3,145	26.7	3,220	54,700	103%
Accurate 2230	23.4	2,950	24.0	3,010	24.7	3,080	25.4	3,155	26.0	3,215	54,900	96%
IMR 4895	24.1	2,925	24.8	2,995	25.5	3,070	26.1	3,130	26.8	3,205	54,900	101%
Ramshot X-Terminator	23.0	2,925	23.6	2,985	24.3	3,055	25.0	3,130	25.6	3,190	54,700	95%
Shooters World The Patriot	22.7	2,925	23.3	2,985	23.9	3,050	24.6	3,120	25.2	3,185	54,600	96%
IMR 4064	23.9	2,880	24.5	2,940	25.2	3,015	25.9	3,085	26.5	3,150	54,800	104%

.223 Remington

The .223 Remington grew out of a U.S. Army program begun in 1957 to develop a small-caliber high-velocity rifle. Remington Arms, Fairchild Industries and ArmaLite designer Eugene Stoner contributed. Early work used the .222 Remington. More case capacity was needed. Remington's larger .222 Special was therefore renamed the .223 Remington. The military accepted the cartridge in 1963 as the M193 5.56mm ball round. The AR-15 was adopted as the M16 the following year. In December 1963 Remington chambered its first commercial rifle for it in the Model 760 and submitted its specifications to SAAMI.

The .223 Remington is one of the most widely used centerfire rifle cartridges. It is chambered in AR-15-pattern rifles and bolt-action rifles for varmint hunting, target shooting and training. Factory ammunition uses .224-inch bullets from 35 to 85 grains. The 55-grain load is the most common. The military 5.56x45mm NATO shares its external dimensions. Its chamber has a longer throat. For this reason 5.56mm military ammunition should not be fired in rifles chambered only for .223 Remington.

Cartridge specifications	
Bullet Diameter	**0.224" (5.69 mm)**
Max Case Length	**1.760" (44.70 mm)**
Case Trim Length	**1.750" (44.45 mm)**
Max COAL	**2.260" (57.40 mm)**
Primer Pocket	**Small Rifle**
Standard Twist	**1:9"**
Case Capacity	**29.3 gr H_2O**
Max Pressure	**55,000 psi (SAAMI)**

35 gr Bullet · 25" barrel

COAL: 2.120" • Bullet length: 0.710" • Seat depth: 0.349" • Usable capacity: 25.9 / 29.2 gr H_2O

Powder	STEP 1 · 90%		STEP 2		STEP 3		STEP 4		STEP 5 · LIMIT			
	gr	fps	gr	fps	gr	fps	gr	fps	gr	fps	psi	Fill
Hodgdon CFE BLK	22.6	3,775	23.2	3,860	23.9	3,955	24.5	4,035	25.1	4,115	54,500	100%
Shooters World SBR-SOCOM	19.5	3,735	20.1	3,825	20.6	3,900	21.1	3,970	21.7	4,060	54,800	86%
Alliant Power Pro 300-MP	17.7	3,660	18.2	3,740	18.7	3,815	19.2	3,890	19.7	3,965	54,500	84%
Accurate 1680	20.8	3,625	21.4	3,705	22.0	3,790	22.5	3,855	23.1	3,940	54,900	92%
Alliant Reloder 7	22.1	3,560	22.7	3,645	23.3	3,725	23.9	3,810	24.5	3,890	54,900	100%
Hodgdon H4198	21.2	3,545	21.8	3,630	22.4	3,715	22.9	3,780	23.5	3,865	54,700	104%
Vihtavuori N120	19.5	3,520	20.1	3,605	20.6	3,675	21.1	3,745	21.7	3,830	54,600	97%
Alliant Power Pro 1200-R	23.2	3,465	23.9	3,555	24.5	3,635	25.1	3,715	25.8	3,810	54,500	101%
Shooters World AR Plus	23.7	3,455	24.4	3,550	25.0	3,630	25.6	3,710	26.3	3,800	54,700	103%
Shooters World The Patriot	23.5	3,400	24.1	3,475	24.8	3,565	25.5	3,655	26.1	3,735	52,000	105%
Reload Swiss RS40	23.0	3,385	23.6	3,465	24.3	3,555	25.0	3,650	25.6	3,730	52,100	105%
Norma 200	22.5	3,380	23.1	3,460	23.8	3,555	24.4	3,635	25.0	3,715	51,600	105%
Accurate LT-32	22.1	3,380	22.7	3,460	23.4	3,550	24.0	3,630	24.6	3,710	54,500	105%
Accurate LT-30	20.9	3,385	21.5	3,465	22.0	3,535	22.6	3,615	23.2	3,695	54,500	90%
Accurate 2015	22.9	3,355	23.5	3,435	24.1	3,510	24.8	3,605	25.4	3,685	54,700	102%
Hodgdon H322	23.0	3,325	23.6	3,400	24.3	3,495	25.0	3,585	25.6	3,665	53,600	105%
Hodgdon H335	24.5	3,300	25.2	3,390	25.9	3,480	26.5	3,555	27.2	3,650	54,500	104%
Alliant Reloder 10x	21.7	3,300	22.3	3,380	22.9	3,460	23.5	3,545	24.1	3,625	52,000	105%

40 gr Bullet · 25" barrel

COAL: 2.125" • Bullet length: 0.605" • Seat depth: 0.240" • Usable capacity: 26.9 / 29.2 gr H_2O

Powder	STEP 1 · 90%		STEP 2		STEP 3		STEP 4		STEP 5 · LIMIT			
	gr	fps	gr	fps	gr	fps	gr	fps	gr	fps	psi	Fill
Hodgdon CFE BLK	22.7	3,645	23.3	3,720	23.9	3,795	24.6	3,885	25.2	3,960	54,900	96%
Shooters World SBR-SOCOM	19.4	3,575	19.9	3,645	20.4	3,715	21.0	3,800	21.5	3,870	54,600	82%
Alliant Power Pro 300-MP	17.6	3,490	18.1	3,565	18.6	3,635	19.0	3,695	19.5	3,765	54,700	80%
Accurate 1680	20.7	3,465	21.3	3,540	21.9	3,620	22.4	3,685	23.0	3,760	54,600	88%
Alliant Reloder 7	22.0	3,455	22.6	3,530	23.2	3,605	23.8	3,685	24.4	3,760	54,500	96%
Accurate 2230	25.1	3,420	25.8	3,500	26.5	3,580	27.2	3,665	27.9	3,745	53,400	105%
Alliant Power Pro 1200-R	23.3	3,410	23.9	3,485	24.6	3,575	25.3	3,665	25.9	3,740	54,900	98%
Ramshot X-Terminator	24.9	3,410	25.6	3,495	26.3	3,575	27.0	3,655	27.7	3,740	54,900	104%
Hodgdon H4198	21.2	3,435	21.8	3,515	22.4	3,595	22.9	3,660	23.5	3,735	54,600	100%
Accurate 2460	25.4	3,390	26.1	3,475	26.8	3,555	27.5	3,635	28.2	3,720	54,000	105%
Norma 200	23.0	3,400	23.6	3,475	24.3	3,565	24.9	3,640	25.5	3,720	54,600	103%
Vihtavuori N130	22.1	3,415	22.7	3,490	23.3	3,565	23.9	3,645	24.5	3,720	54,800	104%
Shooters World AR Plus	23.8	3,395	24.4	3,465	25.1	3,555	25.8	3,640	26.4	3,715	54,500	99%
Shooters World The Patriot	24.0	3,380	24.7	3,465	25.4	3,550	26.0	3,620	26.7	3,705	54,900	103%
Accurate 2200	22.4	3,350	23.0	3,425	23.6	3,500	24.3	3,590	24.9	3,665	54,600	105%
IMR 4198	20.7	3,350	21.3	3,425	21.9	3,505	22.4	3,570	23.0	3,645	54,900	103%
Hodgdon H322	23.4	3,310	24.0	3,385	24.7	3,470	25.4	3,560	26.0	3,635	55,000	102%
Hodgdon H4895	24.6	3,285	25.3	3,370	26.0	3,455	26.6	3,530	27.3	3,615	53,200	105%
Accurate 2015	23.0	3,285	23.6	3,360	24.3	3,450	25.0	3,535	25.6	3,610	55,000	99%
Hodgdon H335	24.7	3,280	25.4	3,365	26.0	3,440	26.7	3,525	27.4	3,610	54,700	100%

45 gr Bullet · 25" barrel

COAL: 2.125" • Bullet length: 0.608" • Seat depth: 0.243" • Usable capacity: 27.0 / 29.2 gr H_2O

Powder	STEP 1 · 90%		STEP 2		STEP 3		STEP 4		STEP 5 · LIMIT			
	gr	fps	gr	fps	gr	fps	gr	fps	gr	fps	psi	Fill
Hodgdon CFE BLK	22.2	3,470	22.8	3,545	23.4	3,620	24.1	3,705	24.7	3,775	54,900	94%
Accurate 2230	24.7	3,315	25.4	3,395	26.0	3,460	26.7	3,540	27.4	3,620	55,000	103%
Alliant Reloder 7	21.5	3,315	22.1	3,390	22.7	3,465	23.3	3,535	23.9	3,610	54,900	94%
Alliant Power Pro 1200-R	22.8	3,295	23.4	3,370	24.1	3,455	24.7	3,525	25.3	3,600	54,500	95%
Accurate 2460	24.8	3,280	25.5	3,355	26.2	3,435	26.9	3,515	27.6	3,595	54,900	102%
Norma 200	22.4	3,285	23.0	3,360	23.6	3,430	24.3	3,520	24.9	3,590	54,600	100%
Shooters World AR Plus	23.4	3,280	24.0	3,350	24.7	3,435	25.4	3,520	26.0	3,590	54,700	97%
Hodgdon Leverevolution	26.7	3,245	27.4	3,325	28.2	3,415	28.9	3,495	29.7	3,585	53,900	105%
Ramshot X-Terminator	24.2	3,275	24.9	3,355	25.5	3,420	26.2	3,500	26.9	3,580	54,900	101%
Hodgdon H4198	20.7	3,290	21.3	3,365	21.9	3,440	22.4	3,500	23.0	3,575	54,500	98%
Vihtavuori N130	21.5	3,275	22.1	3,345	22.7	3,420	23.3	3,495	23.9	3,565	54,500	101%
Shooters World The Patriot	23.5	3,255	24.1	3,325	24.8	3,405	25.5	3,485	26.1	3,555	54,500	100%
Hodgdon H4895	24.4	3,230	25.1	3,315	25.8	3,395	26.4	3,465	27.1	3,550	54,700	104%
Hodgdon H322	23.0	3,210	23.6	3,280	24.3	3,365	24.9	3,435	25.5	3,510	54,600	100%
Hodgdon H335	24.3	3,195	25.0	3,280	25.6	3,350	26.3	3,430	27.0	3,510	54,900	99%
Vihtavuori N135	23.5	3,195	24.1	3,265	24.8	3,345	25.5	3,425	26.1	3,495	52,700	105%
Accurate LT-32	21.9	3,195	22.5	3,270	23.1	3,340	23.7	3,415	24.3	3,485	54,800	99%
Ramshot TAC	23.9	3,170	24.6	3,250	25.3	3,330	25.9	3,400	26.6	3,485	52,000	105%
Accurate 2015	22.6	3,175	23.2	3,245	23.9	3,330	24.5	3,400	25.1	3,475	54,500	96%
IMR 4198	20.1	3,195	20.7	3,270	21.2	3,330	21.8	3,405	22.3	3,465	54,500	99%

50 gr Bullet · 25" barrel

COAL: 2.200" • Bullet length: 0.719" • Seat depth: 0.279" • Usable capacity: 26.6 / 29.2 gr H_2O

Powder	STEP 1 · 90%		STEP 2		STEP 3		STEP 4		STEP 5 · LIMIT			
	gr	fps	gr	fps	gr	fps	gr	fps	gr	fps	psi	Fill
Hodgdon CFE BLK	21.5	3,285	22.1	3,355	22.7	3,430	23.3	3,500	23.9	3,575	54,900	93%
Alliant AR-Comp	23.4	3,215	24.0	3,280	24.7	3,360	25.4	3,440	26.0	3,510	53,500	105%
Hodgdon Leverevolution	26.1	3,145	26.8	3,220	27.6	3,310	28.3	3,390	29.0	3,470	54,500	104%
Alliant Power Pro 1200-R	22.1	3,155	22.7	3,225	23.3	3,295	23.9	3,370	24.5	3,440	54,800	94%
Norma 200	21.6	3,140	22.2	3,210	22.8	3,285	23.4	3,355	24.0	3,430	54,700	98%
Reload Swiss RS40	22.5	3,135	23.1	3,205	23.8	3,285	24.4	3,355	25.0	3,425	54,900	100%
Shooters World AR Plus	22.7	3,130	23.3	3,200	23.9	3,270	24.6	3,350	25.2	3,420	54,600	96%
Accurate 2230	23.6	3,135	24.3	3,210	24.9	3,275	25.6	3,350	26.2	3,415	54,500	100%
Accurate 2460	23.9	3,125	24.5	3,190	25.2	3,265	25.9	3,345	26.5	3,410	54,600	100%
Vihtavuori N130	20.8	3,120	21.4	3,190	22.0	3,265	22.5	3,325	23.1	3,395	54,800	100%
Ramshot X-Terminator	23.2	3,105	23.9	3,180	24.5	3,245	25.1	3,315	25.8	3,390	54,700	98%
Vihtavuori N135	23.0	3,090	23.6	3,155	24.3	3,235	25.0	3,310	25.6	3,380	54,900	105%
Ramshot TAC	23.6	3,080	24.3	3,160	24.9	3,225	25.6	3,305	26.2	3,375	53,900	105%
Vihtavuori N530	23.0	3,070	23.6	3,140	24.3	3,220	25.0	3,300	25.6	3,370	54,900	103%
Hodgdon H322	22.3	3,070	22.9	3,140	23.6	3,220	24.2	3,290	24.8	3,365	54,900	99%
Hodgdon H335	23.6	3,070	24.3	3,150	24.9	3,215	25.6	3,295	26.2	3,365	54,900	97%
Accurate 2200	21.3	3,075	21.9	3,150	22.5	3,220	23.1	3,290	23.7	3,360	54,600	101%
Shooters World Match Rifle	24.4	3,035	25.1	3,110	25.8	3,190	26.4	3,260	27.1	3,340	53,500	105%
IMR 3031	22.5	3,025	23.1	3,095	23.8	3,180	24.4	3,250	25.0	3,320	54,600	100%
Vihtavuori N133	21.9	3,045	22.5	3,115	23.1	3,185	23.7	3,250	24.3	3,320	54,400	105%

55 gr Bullet · 25" barrel

COAL: 2.200" • Bullet length: 0.736" • Seat depth: 0.296" • Usable capacity: 26.4 / 29.2 gr H_2O

Powder	STEP 1 · 90%		STEP 2		STEP 3		STEP 4		STEP 5 · LIMIT			
	gr	fps	gr	fps	gr	fps	gr	fps	gr	fps	psi	Fill
Hodgdon CFE BLK	21.0	3,140	21.6	3,210	22.1	3,265	22.7	3,335	23.3	3,405	54,800	91%
Alliant AR-Comp	23.0	3,105	23.6	3,170	24.3	3,250	24.9	3,315	25.5	3,380	54,400	103%
Hodgdon Leverevolution	25.7	3,065	26.4	3,145	27.1	3,220	27.8	3,295	28.5	3,375	54,700	103%
Alliant Power Pro 1200-R	21.5	3,030	22.1	3,100	22.7	3,170	23.3	3,240	23.9	3,305	54,800	92%
Reload Swiss RS40	22.1	3,030	22.7	3,095	23.3	3,165	23.9	3,235	24.5	3,300	55,000	98%
Shooters World AR Plus	22.2	3,015	22.8	3,080	23.4	3,150	24.1	3,230	24.7	3,295	54,700	95%
Norma 200	21.0	3,020	21.6	3,090	22.1	3,150	22.7	3,220	23.3	3,290	54,500	96%
Hodgdon Benchmark	22.7	2,995	23.3	3,065	23.9	3,130	24.6	3,205	25.2	3,275	54,900	105%
Ramshot TAC	23.2	2,985	23.9	3,060	24.5	3,130	25.1	3,195	25.8	3,275	54,500	104%
Alliant Power Pro Varmint	23.6	2,980	24.3	3,060	24.9	3,125	25.6	3,200	26.2	3,270	53,800	105%
Accurate 2230	22.9	3,000	23.5	3,065	24.1	3,130	24.8	3,205	25.4	3,265	54,700	97%
Accurate 2460	23.1	2,990	23.8	3,060	24.4	3,125	25.1	3,200	25.7	3,265	54,500	97%
Vihtavuori N135	22.4	2,975	23.0	3,040	23.6	3,105	24.3	3,180	24.9	3,245	54,900	102%
Hodgdon H335	23.0	2,955	23.6	3,020	24.3	3,100	25.0	3,175	25.6	3,240	54,500	96%
Ramshot X-Terminator	22.5	2,975	23.1	3,040	23.8	3,110	24.4	3,175	25.0	3,240	54,800	96%
Hodgdon H322	21.8	2,960	22.4	3,030	23.0	3,095	23.6	3,165	24.2	3,235	54,400	97%
Accurate 2015	21.5	2,925	22.1	2,995	22.7	3,060	23.3	3,130	23.9	3,195	54,700	94%
IMR 4320	24.1	2,890	24.8	2,970	25.5	3,050	26.1	3,115	26.8	3,195	54,900	102%
Vihtavuori N133	21.3	2,925	21.9	2,995	22.5	3,060	23.1	3,125	23.7	3,195	54,500	103%
Shooters World Tactical Rifle	22.4	2,900	23.0	2,965	23.6	3,030	24.3	3,110	24.9	3,180	54,500	97%

60 gr Bullet · 25" barrel

COAL: 2.200" • Bullet length: 0.849" • Seat depth: 0.409" • Usable capacity: 25.4 / 29.2 gr H_2O

Powder	STEP 1 · 90%		STEP 2		STEP 3		STEP 4		STEP 5 · LIMIT			
	gr	fps	gr	fps	gr	fps	gr	fps	gr	fps	psi	Fill
Hodgdon CFE BLK	20.1	2,975	20.7	3,045	21.2	3,100	21.8	3,170	22.3	3,230	55,000	90%
Hodgdon Leverevolution	24.6	2,935	25.3	3,010	26.0	3,085	26.6	3,150	27.3	3,225	54,500	103%
Alliant AR-Comp	22.0	2,955	22.6	3,020	23.2	3,085	23.8	3,150	24.4	3,220	54,900	103%
Alliant Power Pro 1200-R	20.5	2,880	21.1	2,950	21.6	3,005	22.2	3,075	22.8	3,145	54,800	91%
Hodgdon H4895	22.1	2,870	22.7	2,935	23.4	3,010	24.0	3,080	24.6	3,145	54,900	100%
Accurate 2520	23.3	2,855	23.9	2,920	24.6	2,995	25.3	3,070	25.9	3,135	52,200	105%
IMR 4895	23.0	2,865	23.6	2,930	24.3	3,005	24.9	3,070	25.5	3,135	54,600	104%
Reload Swiss RS40	21.1	2,875	21.7	2,945	22.3	3,010	22.8	3,070	23.4	3,135	54,700	98%
Vihtavuori N140	23.5	2,850	24.1	2,915	24.8	2,990	25.5	3,065	26.1	3,135	52,000	105%
Ramshot TAC	22.3	2,855	22.9	2,920	23.6	2,995	24.2	3,065	24.8	3,130	55,000	104%
Hodgdon BL-C(2)	23.9	2,840	24.5	2,905	25.2	2,980	25.9	3,060	26.5	3,125	53,400	105%
Shooters World Match Rifle	23.1	2,835	23.8	2,915	24.4	2,980	25.1	3,055	25.7	3,125	54,600	104%
Hodgdon Varget	23.0	2,830	23.6	2,895	24.3	2,975	25.0	3,055	25.6	3,120	52,800	105%
Hodgdon Benchmark	21.6	2,850	22.2	2,915	22.8	2,985	23.4	3,050	24.0	3,115	54,800	104%
Accurate 2230	21.8	2,845	22.4	2,910	23.0	2,970	23.6	3,035	24.2	3,100	54,900	96%
Accurate 2460	22.1	2,845	22.7	2,910	23.3	2,975	23.9	3,035	24.5	3,100	54,700	97%
Hodgdon H335	22.1	2,830	22.7	2,895	23.4	2,970	24.0	3,035	24.6	3,100	54,900	96%
IMR 8208 XBR	21.8	2,830	22.4	2,900	23.0	2,965	23.6	3,030	24.2	3,095	54,500	103%
Vihtavuori N135	21.3	2,820	21.9	2,885	22.5	2,950	23.1	3,015	23.7	3,080	54,700	101%
Ramshot X-Terminator	21.4	2,820	22.0	2,880	22.6	2,945	23.2	3,010	23.8	3,070	54,800	95%

69 gr Bullet · 25" barrel

COAL: 2.240" • Bullet length: 0.961" • Seat depth: 0.481" • Usable capacity: 24.8 / 29.2 gr H_2O

Powder	STEP 1 · 90%		STEP 2		STEP 3		STEP 4		STEP 5 · LIMIT			
	gr	fps	gr	fps	gr	fps	gr	fps	gr	fps	psi	Fill
Hodgdon Leverevolution	23.6	2,775	24.3	2,850	24.9	2,910	25.6	2,985	26.2	3,050	54,800	101%
Vihtavuori N140	22.8	2,730	23.4	2,795	24.1	2,865	24.7	2,930	25.3	2,995	54,500	104%
Winchester 748	22.7	2,730	23.3	2,795	23.9	2,860	24.6	2,935	25.2	2,995	53,000	105%
Accurate 2520	22.7	2,730	23.3	2,790	23.9	2,850	24.6	2,925	25.2	2,985	54,900	105%
Hodgdon BL-C(2)	23.1	2,710	23.8	2,780	24.4	2,845	25.1	2,920	25.7	2,985	55,000	104%
Hodgdon Varget	22.3	2,715	22.9	2,780	23.6	2,855	24.2	2,920	24.8	2,985	54,900	104%
Hodgdon CFE BLK	19.0	2,735	19.5	2,790	20.1	2,860	20.6	2,915	21.1	2,970	54,500	88%
Alliant AR-Comp	20.7	2,720	21.3	2,785	21.9	2,850	22.4	2,900	23.0	2,965	54,500	100%
Alliant Power Pro Varmint	21.7	2,685	22.3	2,750	22.9	2,815	23.5	2,875	24.1	2,940	54,600	103%
Hodgdon H4895	21.1	2,695	21.7	2,760	22.3	2,825	22.8	2,875	23.4	2,940	54,800	98%
Ramshot TAC	21.3	2,675	21.9	2,740	22.5	2,800	23.1	2,865	23.7	2,930	54,800	102%
Reload Swiss RS40	20.1	2,680	20.7	2,750	21.2	2,805	21.8	2,870	22.3	2,925	54,600	96%
Reload Swiss RS52	22.2	2,650	22.8	2,710	23.4	2,775	24.1	2,850	24.7	2,915	52,600	105%
Hodgdon H335	21.2	2,660	21.8	2,725	22.4	2,785	22.9	2,840	23.5	2,905	54,900	94%
Vihtavuori N540	22.0	2,655	22.6	2,715	23.2	2,775	23.8	2,840	24.4	2,900	52,200	105%
Shooters World The Creed	22.4	2,610	23.0	2,675	23.6	2,735	24.3	2,810	24.9	2,875	54,600	105%
Shooters World The Patriot	20.2	2,630	20.8	2,695	21.3	2,750	21.8	2,800	22.4	2,865	54,900	94%
Accurate 2230	20.4	2,615	21.0	2,675	21.5	2,730	22.1	2,790	22.7	2,850	54,700	93%
Vihtavuori N135	20.1	2,620	20.7	2,680	21.2	2,735	21.8	2,795	22.3	2,850	54,500	98%
Vihtavuori N133	19.3	2,585	19.8	2,640	20.4	2,705	20.9	2,760	21.4	2,815	54,700	99%

77 gr Bullet · 25" barrel

COAL: 2.260" • Bullet length: 1.058" • Seat depth: 0.558" • Usable capacity: 24.1 / 29.2 gr H_2O

Powder	STEP 1 · 90%		STEP 2		STEP 3		STEP 4		STEP 5 · LIMIT			
	gr	fps	gr	fps	gr	fps	gr	fps	gr	fps	psi	Fill
Hodgdon Leverevolution	22.6	2,625	23.2	2,690	23.9	2,760	24.5	2,820	25.1	2,885	54,500	100%
Winchester 748	22.1	2,620	22.7	2,685	23.3	2,745	23.9	2,810	24.5	2,875	55,000	105%
Hodgdon BL-C(2)	22.2	2,570	22.8	2,635	23.4	2,695	24.1	2,770	24.7	2,835	54,900	103%
Vihtavuori N140	21.8	2,580	22.4	2,645	23.0	2,705	23.6	2,765	24.2	2,830	54,600	103%
Hodgdon Varget	21.3	2,570	21.9	2,630	22.5	2,695	23.1	2,760	23.7	2,820	54,600	102%
Accurate 2520	21.7	2,570	22.3	2,630	22.9	2,690	23.5	2,755	24.1	2,815	54,800	103%
Hodgdon CFE 223	22.2	2,555	22.8	2,620	23.4	2,680	24.1	2,750	24.7	2,815	54,900	105%
IMR 4895	20.9	2,545	21.5	2,605	22.0	2,660	22.6	2,720	23.2	2,785	54,900	100%
Norma 202	20.8	2,550	21.4	2,610	22.0	2,670	22.5	2,725	23.1	2,785	54,400	104%
Norma 201	20.3	2,520	20.9	2,585	21.5	2,650	22.0	2,705	22.6	2,775	54,400	104%
Hodgdon H4895	20.1	2,530	20.7	2,595	21.2	2,645	21.8	2,710	22.3	2,765	54,600	96%
Vihtavuori N540	21.2	2,525	21.8	2,585	22.4	2,645	23.0	2,705	23.6	2,765	54,500	104%
Ramshot TAC	20.4	2,520	21.0	2,580	21.5	2,635	22.1	2,695	22.7	2,760	54,800	100%
IMR 4064	20.7	2,515	21.3	2,580	21.9	2,640	22.4	2,690	23.0	2,755	54,800	102%
Reload Swiss RS40	19.3	2,530	19.8	2,580	20.4	2,645	20.9	2,700	21.4	2,755	55,000	94%
Hodgdon H335	20.3	2,505	20.9	2,570	21.4	2,620	21.9	2,670	22.5	2,735	55,000	92%
IMR 8208 XBR	19.6	2,485	20.2	2,545	20.7	2,600	21.3	2,660	21.8	2,715	54,700	98%
Hodgdon Benchmark	19.4	2,490	19.9	2,545	20.4	2,595	21.0	2,660	21.5	2,710	54,600	98%
Vihtavuori N530	18.8	2,480	19.3	2,530	19.9	2,595	20.4	2,645	20.9	2,700	54,900	93%
Accurate 2230	19.4	2,445	19.9	2,495	20.4	2,545	21.0	2,605	21.5	2,655	55,000	90%

90 gr Bullet · 25" barrel

COAL: 2.260" • Bullet length: 1.235" • Seat depth: 0.735" • Usable capacity: 22.8 / 29.2 gr H_2O

Powder	STEP 1 · 90%		STEP 2		STEP 3		STEP 4		STEP 5 · LIMIT			
	gr	fps	gr	fps	gr	fps	gr	fps	gr	fps	psi	Fill
Hodgdon Leverevolution	21.1	2,420	21.7	2,480	22.3	2,540	22.8	2,590	23.4	2,650	54,500	98%
Hodgdon BL-C(2)	20.7	2,365	21.3	2,425	21.9	2,485	22.4	2,535	23.0	2,600	54,400	101%
Alliant Reloder 15	20.1	2,365	20.7	2,425	21.2	2,475	21.8	2,535	22.3	2,585	53,300	105%
Hodgdon Varget	19.8	2,360	20.4	2,420	20.9	2,470	21.4	2,525	22.0	2,585	54,500	100%
Vihtavuori N140	20.2	2,360	20.8	2,420	21.3	2,470	21.8	2,520	22.4	2,585	54,600	100%
Hodgdon CFE 223	20.7	2,350	21.3	2,410	21.9	2,470	22.4	2,520	23.0	2,580	54,800	103%
Reload Swiss RS52	20.2	2,345	20.8	2,410	21.3	2,460	21.8	2,510	22.4	2,575	54,400	103%
Accurate 2520	20.2	2,350	20.8	2,410	21.3	2,460	21.8	2,510	22.4	2,570	54,900	101%
Shooters World Match Rifle	19.8	2,330	20.4	2,390	20.9	2,440	21.4	2,495	22.0	2,555	54,500	99%
IMR 4895	19.3	2,320	19.8	2,370	20.4	2,430	20.9	2,485	21.4	2,535	54,600	97%
Hodgdon H4350	21.3	2,280	21.9	2,340	22.5	2,400	23.1	2,460	23.7	2,520	52,300	105%
Ramshot TAC	19.0	2,300	19.5	2,350	20.1	2,410	20.6	2,465	21.1	2,515	54,600	99%
Hodgdon H4895	18.5	2,295	19.0	2,345	19.6	2,405	20.1	2,460	20.6	2,510	54,400	94%
IMR 4064	19.1	2,300	19.6	2,350	20.1	2,400	20.7	2,460	21.2	2,510	55,000	100%
Shooters World The Creed	20.0	2,290	20.6	2,350	21.1	2,400	21.6	2,450	22.2	2,510	54,900	101%
Reload Swiss RS50	20.4	2,280	21.0	2,335	21.5	2,385	22.1	2,445	22.7	2,505	53,300	105%
Vihtavuori N540	19.5	2,290	20.1	2,350	20.6	2,400	21.1	2,450	21.7	2,505	54,800	101%
Alliant AR-Comp	18.1	2,290	18.6	2,340	19.1	2,390	19.6	2,440	20.1	2,495	54,800	95%
Hodgdon H335	18.8	2,275	19.3	2,325	19.9	2,390	20.4	2,440	20.9	2,490	54,900	91%
IMR 8208 XBR	18.1	2,260	18.6	2,310	19.1	2,360	19.6	2,415	20.1	2,465	55,000	96%

.223 WSSM

Winchester and Browning jointly introduced the .223 Winchester Super Short Magnum (WSSM) in 2003 as a high-velocity varmint cartridge. The case was derived from the .300 Winchester Short Magnum (WSM). It was shortened to 1.670 inches and necked down to accept .224-inch bullets. The resulting case was short and wide and required dedicated actions. The cartridge was chambered in the Winchester Model 70 and Browning A-Bolt rifles. It was part of a Super Short Magnum family that also included the .243 WSSM and .25 WSSM.

Factory loads have ranged from 40-grain bullets at about 4,350 fps to 75-grain bullets at about 3,380 fps. Bullets of 55 to 64 grains are common for general varmint use. The cartridge was marketed primarily for varmint and predator hunting. Its flat trajectory suits long shots at small targets. Browning fitted chrome-lined barrels to its rifles in this chambering. Winchester later dropped the cartridge from the Model 70 line. Today the .223 WSSM remains a niche chambering with limited rifle and ammunition availability.

Cartridge specifications	
Bullet Diameter	**0.224" (5.69 mm)**
Max Case Length	**1.670" (42.42 mm)**
Case Trim Length	**1.660" (42.17 mm)**
Max COAL	**2.360" (59.94 mm)**
Primer Pocket	**Large Rifle**
Standard Twist	**1:10"**
Case Capacity	**55.6 gr H_2O**
Max Pressure	**65,000 psi (SAAMI)**

35 gr Bullet · 25" barrel

COAL: 2.120" • Bullet length: 0.712" • Seat depth: 0.262" • Usable capacity: 53.1 / 55.6 gr H_2O

Powder	STEP 1 · 90%		STEP 2		STEP 3		STEP 4		STEP 5 · LIMIT			
	gr	fps	gr	fps	gr	fps	gr	fps	gr	fps	psi	Fill
Hodgdon Leverevolution	43.4	4,285	44.6	4,385	45.8	4,485	47.0	4,585	48.2	4,680	64,900	87%
IMR 4895	41.9	4,265	43.1	4,365	44.3	4,460	45.4	4,550	46.6	4,650	64,600	91%
Vihtavuori N540	42.2	4,245	43.4	4,340	44.5	4,425	45.7	4,520	46.9	4,615	64,800	94%
Accurate 2520	41.4	4,235	42.5	4,325	43.7	4,420	44.9	4,515	46.0	4,600	65,000	89%
Vihtavuori N550	45.3	4,205	46.5	4,300	47.8	4,400	49.0	4,495	50.3	4,600	64,900	100%
Reload Swiss RS52	41.8	4,200	42.9	4,290	44.1	4,390	45.3	4,490	46.4	4,585	64,900	92%
Alliant AR-Comp	38.5	4,235	39.6	4,325	40.6	4,405	41.7	4,490	42.8	4,580	64,700	86%
Hodgdon CFE 223	42.9	4,195	44.1	4,290	45.3	4,385	46.5	4,480	47.7	4,580	64,800	92%
IMR 4064	41.9	4,195	43.0	4,285	44.2	4,385	45.4	4,480	46.5	4,570	64,700	94%
Hodgdon H4895	39.6	4,195	40.7	4,285	41.8	4,375	42.9	4,470	44.0	4,560	64,900	86%
Norma 202	40.4	4,190	41.5	4,275	42.6	4,360	43.8	4,455	44.9	4,545	64,900	92%
Alliant Power Pro 2000-MR	43.5	4,130	44.7	4,225	45.9	4,320	47.1	4,420	48.3	4,515	64,800	96%
Accurate 2700	45.6	4,090	46.9	4,195	48.2	4,295	49.4	4,395	50.7	4,500	64,900	97%
Hodgdon H380	44.5	4,075	45.7	4,175	47.0	4,280	48.2	4,380	49.4	4,480	64,900	99%
Hodgdon Varget	40.5	4,075	41.6	4,170	42.8	4,270	43.9	4,360	45.0	4,455	64,800	88%
Shooters World Precision Rifle	41.4	4,060	42.5	4,150	43.7	4,250	44.9	4,345	46.0	4,440	64,700	96%
Winchester 760	45.4	4,035	46.6	4,130	47.9	4,235	49.1	4,330	50.4	4,435	64,900	98%
Alliant Reloder 16	45.2	4,020	46.5	4,125	47.7	4,220	49.0	4,325	50.2	4,425	61,900	105%
Ramshot Big Game	43.6	4,040	44.8	4,135	46.0	4,225	47.2	4,320	48.4	4,420	64,900	93%
Hodgdon H414	45.1	4,005	46.4	4,110	47.6	4,200	48.9	4,305	50.1	4,405	64,900	96%

40 gr Bullet · 25" barrel

COAL: 2.140" • Bullet length: 0.694" • Seat depth: 0.224" • Usable capacity: 53.4 / 55.6 gr H_2O

Powder	STEP 1 · 90%		STEP 2		STEP 3		STEP 4		STEP 5 · LIMIT			
	gr	fps	gr	fps	gr	fps	gr	fps	gr	fps	psi	Fill
Hodgdon Leverevolution	42.8	4,135	44.0	4,230	45.1	4,320	46.3	4,415	47.5	4,510	64,800	85%
IMR 4895	41.2	4,110	42.4	4,205	43.5	4,290	44.6	4,380	45.8	4,470	65,000	89%
Reload Swiss RS52	41.2	4,055	42.4	4,150	43.5	4,240	44.6	4,325	45.8	4,425	64,700	90%
Vihtavuori N540	41.3	4,070	42.4	4,155	43.6	4,245	44.8	4,335	45.9	4,420	64,900	91%
Vihtavuori N550	44.3	4,055	45.5	4,145	46.8	4,240	48.0	4,330	49.2	4,420	64,800	97%
Hodgdon BL-C(2)	41.7	4,045	42.9	4,145	44.0	4,230	45.1	4,320	46.3	4,415	64,900	87%
Hodgdon CFE 223	42.3	4,045	43.5	4,140	44.6	4,225	45.8	4,320	47.0	4,410	64,600	90%
IMR 4064	41.1	4,055	42.3	4,145	43.4	4,230	44.6	4,325	45.7	4,410	64,900	92%
IMR 4320	41.2	4,020	42.4	4,120	43.5	4,210	44.6	4,295	45.8	4,395	64,900	86%
Accurate 2700	45.2	3,980	46.5	4,080	47.7	4,175	49.0	4,275	50.2	4,370	64,800	96%
Alliant Reloder 16	45.2	3,975	46.5	4,080	47.7	4,170	49.0	4,275	50.2	4,370	64,700	104%
Norma 201	39.4	3,995	40.5	4,085	41.6	4,180	42.7	4,270	43.8	4,365	64,700	91%
Alliant Reloder 15	40.7	4,000	41.8	4,085	43.0	4,175	44.1	4,265	45.2	4,350	64,900	90%
Hodgdon H380	43.9	3,965	45.1	4,060	46.3	4,150	47.6	4,255	48.8	4,350	64,900	97%
Winchester 760	44.9	3,930	46.1	4,020	47.4	4,120	48.6	4,215	49.9	4,315	64,800	96%
Hodgdon Varget	39.9	3,950	41.0	4,040	42.1	4,130	43.2	4,215	44.3	4,305	64,700	86%
Hodgdon H414	44.6	3,900	45.9	4,000	47.1	4,095	48.4	4,195	49.6	4,290	64,800	95%
Hodgdon SUPERFORMANCE	47.3	3,860	48.6	3,965	50.0	4,075	51.3	4,180	52.6	4,285	64,900	96%
Ramshot Big Game	43.0	3,910	44.2	4,000	45.4	4,095	46.6	4,185	47.8	4,275	64,800	91%
Ramshot Hunter	45.8	3,885	47.1	3,985	48.3	4,075	49.6	4,175	50.9	4,275	64,800	101%

45 gr Bullet · 25" barrel

COAL: 2.100" • Bullet length: 0.665" • Seat depth: 0.235" • Usable capacity: 53.4 / 55.6 gr H_2O

Powder	STEP 1 · 90%		STEP 2		STEP 3		STEP 4		STEP 5 · LIMIT			
	gr	fps	gr	fps	gr	fps	gr	fps	gr	fps	psi	Fill
Hodgdon Leverevolution	42.0	3,980	43.2	4,070	44.4	4,165	45.5	4,250	46.7	4,340	64,700	83%
IMR 4895	40.3	3,950	41.4	4,035	42.5	4,120	43.7	4,210	44.8	4,295	65,000	87%
Reload Swiss RS52	40.6	3,920	41.7	4,005	42.9	4,095	44.0	4,180	45.1	4,265	64,700	89%
Hodgdon BL-C(2)	41.0	3,900	42.1	3,990	43.3	4,080	44.5	4,175	45.6	4,260	64,700	86%
Alliant Reloder 23	46.5	3,860	47.8	3,955	49.1	4,055	50.4	4,155	51.7	4,255	64,600	105%
Hodgdon CFE 223	41.7	3,910	42.9	4,005	44.0	4,085	45.1	4,165	46.3	4,255	65,000	88%
Vihtavuori N550	43.2	3,900	44.4	3,990	45.6	4,075	46.8	4,160	48.0	4,250	64,800	94%
Accurate 2700	44.6	3,870	45.9	3,965	47.1	4,055	48.4	4,150	49.6	4,245	64,800	95%
IMR 4064	40.2	3,905	41.3	3,990	42.5	4,080	43.6	4,160	44.7	4,245	64,800	89%
Winchester StaBALL 6.5	45.2	3,860	46.5	3,955	47.7	4,045	49.0	4,140	50.2	4,230	64,700	95%
Alliant Power Pro 2000-MR	42.3	3,870	43.5	3,960	44.6	4,045	45.8	4,135	47.0	4,225	64,800	92%
Hodgdon H380	43.2	3,850	44.4	3,940	45.6	4,030	46.8	4,120	48.0	4,210	64,800	95%
Hodgdon H4350	44.4	3,815	45.6	3,910	46.8	4,005	48.1	4,105	49.3	4,200	64,800	93%
Hodgdon H4895	38.1	3,870	39.1	3,950	40.2	4,035	41.3	4,120	42.3	4,195	64,800	82%
Winchester 760	44.4	3,830	45.6	3,920	46.8	4,010	48.1	4,105	49.3	4,195	65,000	95%
Vihtavuori N150	40.1	3,850	41.2	3,930	42.4	4,025	43.5	4,105	44.6	4,190	65,000	94%
Ramshot Hunter	45.3	3,790	46.5	3,880	47.8	3,975	49.0	4,065	50.3	4,165	64,700	100%
Hodgdon Varget	39.2	3,825	40.3	3,910	41.4	3,995	42.4	4,070	43.5	4,155	64,700	85%
Ramshot Big Game	42.4	3,790	43.6	3,880	44.8	3,970	45.9	4,050	47.1	4,140	64,800	90%
Alliant Reloder 22	47.1	3,695	48.4	3,790	49.7	3,890	51.0	3,990	52.3	4,090	64,800	104%

50 gr Bullet · 25" barrel

COAL: 2.100" • Bullet length: 0.738" • Seat depth: 0.308" • Usable capacity: 52.6 / 55.6 gr H_2O

Powder	STEP 1 · 90%		STEP 2		STEP 3		STEP 4		STEP 5 · LIMIT			
	gr	fps	gr	fps	gr	fps	gr	fps	gr	fps	psi	Fill
Hodgdon Leverevolution	40.8	3,810	41.9	3,895	43.0	3,980	44.2	4,070	45.3	4,155	64,700	82%
Alliant Reloder 23	45.5	3,745	46.8	3,840	48.0	3,930	49.3	4,025	50.5	4,115	65,000	104%
IMR 4895	38.9	3,770	40.0	3,850	41.0	3,925	42.1	4,010	43.2	4,090	64,800	85%
Accurate 2700	43.5	3,730	44.7	3,820	45.9	3,905	47.1	3,995	48.3	4,085	64,700	93%
Hodgdon BL-C(2)	40.0	3,750	41.1	3,835	42.2	3,915	43.3	4,000	44.4	4,085	64,900	85%
Reload Swiss RS52	39.4	3,755	40.5	3,835	41.6	3,920	42.7	4,000	43.8	4,085	64,600	87%
Alliant Reloder 26	47.9	3,685	49.2	3,780	50.5	3,875	51.9	3,980	53.2	4,075	64,800	102%
Winchester StaBALL 6.5	44.0	3,720	45.2	3,805	46.5	3,900	47.7	3,990	48.9	4,075	64,900	94%
Alliant Reloder 16	42.9	3,725	44.1	3,810	45.3	3,895	46.5	3,985	47.7	4,070	64,900	101%
IMR 4064	38.9	3,740	40.0	3,820	41.0	3,895	42.1	3,975	43.2	4,060	64,900	88%
Vihtavuori N550	41.6	3,730	42.8	3,815	43.9	3,890	45.1	3,975	46.2	4,055	64,800	92%
Winchester 760	43.2	3,690	44.4	3,780	45.6	3,865	46.8	3,955	48.0	4,045	64,900	94%
Hodgdon H414	42.9	3,670	44.1	3,755	45.3	3,845	46.5	3,935	47.7	4,025	64,900	92%
Ramshot Hunter	44.2	3,665	45.4	3,755	46.7	3,845	47.9	3,935	49.1	4,025	65,000	99%
IMR 4350	43.4	3,660	44.6	3,750	45.8	3,840	47.0	3,930	48.2	4,020	64,900	98%
Norma 204	44.5	3,655	45.7	3,745	47.0	3,840	48.2	3,930	49.4	4,020	64,800	99%
Alliant Reloder 22	45.9	3,595	47.2	3,690	48.5	3,790	49.7	3,880	51.0	3,985	64,800	103%
Hodgdon Varget	38.0	3,665	39.0	3,740	40.1	3,825	41.2	3,910	42.2	3,985	65,000	83%
IMR 4831	43.9	3,590	45.1	3,685	46.3	3,775	47.6	3,875	48.8	3,970	64,800	100%
Reload Swiss RS76	49.3	3,540	50.7	3,635	52.0	3,725	53.4	3,825	54.8	3,925	62,600	105%

55 gr Bullet · 25" barrel

COAL: 2.110" • Bullet length: 0.795" • Seat depth: 0.355" • Usable capacity: 52.2 / 55.6 gr H_2O

Powder	STEP 1 · 90%		STEP 2		STEP 3		STEP 4		STEP 5 · LIMIT			
	gr	fps	gr	fps	gr	fps	gr	fps	gr	fps	psi	Fill
Hodgdon Leverevolution	39.9	3,670	41.0	3,755	42.1	3,835	43.2	3,920	44.3	4,000	64,800	81%
Alliant Reloder 23	44.6	3,640	45.8	3,725	47.0	3,810	48.3	3,905	49.5	3,990	64,800	103%
Alliant Reloder 26	47.1	3,605	48.4	3,695	49.7	3,790	51.0	3,885	52.3	3,980	64,900	101%
Vihtavuori N560	47.2	3,600	48.5	3,690	49.8	3,775	51.1	3,870	52.4	3,960	62,600	105%
Accurate 2700	42.7	3,620	43.9	3,705	45.0	3,780	46.2	3,870	47.4	3,955	64,800	92%
Hodgdon SUPERFORMANCE	44.8	3,590	46.0	3,675	47.3	3,770	48.5	3,860	49.8	3,955	64,800	93%
Winchester StaBALL 6.5	43.1	3,605	44.3	3,685	45.5	3,770	46.7	3,855	47.9	3,940	64,800	93%
Winchester 760	42.3	3,580	43.5	3,665	44.6	3,740	45.8	3,830	47.0	3,915	64,700	93%
Vihtavuori N555	44.1	3,545	45.3	3,635	46.5	3,725	47.8	3,820	49.0	3,910	64,900	101%
Hodgdon H380	41.0	3,580	42.1	3,660	43.3	3,745	44.4	3,825	45.5	3,905	64,800	93%
IMR 4350	42.4	3,560	43.6	3,645	44.8	3,735	45.9	3,810	47.1	3,900	64,800	97%
Ramshot Hunter	43.3	3,555	44.5	3,640	45.7	3,725	46.9	3,815	48.1	3,900	64,700	98%
Hodgdon H414	42.0	3,555	43.2	3,640	44.4	3,730	45.5	3,810	46.7	3,895	64,700	91%
Vihtavuori N550	40.4	3,585	41.5	3,660	42.6	3,740	43.8	3,820	44.9	3,895	64,900	90%
Vihtavuori N160	43.5	3,530	44.7	3,615	45.9	3,695	47.1	3,780	48.3	3,870	64,900	100%
Accurate 4064	38.3	3,560	39.3	3,630	40.4	3,710	41.5	3,790	42.5	3,865	64,700	90%
Reload Swiss RS76	48.9	3,485	50.3	3,580	51.6	3,670	52.9	3,760	54.3	3,860	63,900	105%
Hodgdon Varget	37.0	3,525	38.0	3,600	39.0	3,675	40.1	3,755	41.1	3,830	64,800	82%
Ramshot Grand	48.4	3,435	49.8	3,535	51.1	3,630	52.4	3,725	53.8	3,825	62,600	105%
Alliant Reloder 19	43.7	3,450	44.9	3,535	46.2	3,630	47.4	3,720	48.6	3,810	64,900	99%

60 gr Bullet · 25" barrel

COAL: 2.150" • Bullet length: 0.804" • Seat depth: 0.324" • Usable capacity: 52.5 / 55.6 gr H_2O

Powder	STEP 1 · 90%		STEP 2		STEP 3		STEP 4		STEP 5 · LIMIT			
	gr	fps	gr	fps	gr	fps	gr	fps	gr	fps	psi	Fill
Alliant Reloder 26	46.5	3,515	47.8	3,605	49.1	3,695	50.4	3,790	51.7	3,880	64,700	99%
Alliant Reloder 23	44.0	3,535	45.2	3,615	46.5	3,705	47.7	3,790	48.9	3,875	64,800	101%
Vihtavuori N560	46.8	3,530	48.1	3,615	49.4	3,700	50.7	3,790	52.0	3,875	64,900	103%
Hodgdon SUPERFORMANCE	44.3	3,500	45.5	3,585	46.8	3,675	48.0	3,760	49.2	3,845	64,800	92%
Accurate 2700	42.1	3,500	43.3	3,585	44.5	3,665	45.6	3,745	46.8	3,830	64,700	91%
Hodgdon H4350	41.3	3,485	42.4	3,560	43.6	3,645	44.8	3,730	45.9	3,810	64,900	88%
Winchester StaBALL 6.5	42.5	3,490	43.7	3,570	44.9	3,650	46.0	3,725	47.2	3,810	64,900	91%
Accurate 4350	42.2	3,475	43.4	3,560	44.5	3,635	45.7	3,720	46.9	3,805	64,600	93%
Winchester 760	41.8	3,470	42.9	3,550	44.1	3,630	45.3	3,715	46.4	3,795	64,800	91%
Ramshot Hunter	42.8	3,455	44.0	3,540	45.2	3,620	46.4	3,705	47.6	3,790	65,000	96%
IMR 4350	41.7	3,455	42.9	3,540	44.0	3,615	45.1	3,690	46.3	3,775	64,800	95%
IMR 4831	42.8	3,435	44.0	3,520	45.1	3,600	46.3	3,690	47.5	3,775	64,700	97%
Hodgdon Retumbo	47.7	3,385	49.0	3,470	50.4	3,570	51.7	3,655	53.0	3,750	62,400	105%
IMR 4064	37.1	3,460	38.1	3,530	39.2	3,605	40.2	3,675	41.2	3,745	64,700	84%
Vihtavuori N160	42.8	3,425	44.0	3,505	45.1	3,580	46.3	3,660	47.5	3,745	64,800	98%
Vihtavuori N165	45.3	3,390	46.5	3,470	47.8	3,555	49.0	3,640	50.3	3,725	64,900	103%
Alliant Reloder 19	43.3	3,380	44.5	3,465	45.7	3,550	46.9	3,635	48.1	3,720	64,900	97%
Vihtavuori N565	47.3	3,345	48.6	3,435	49.9	3,525	51.2	3,615	52.5	3,710	62,800	105%
Hodgdon H1000	45.7	3,335	47.0	3,425	48.3	3,515	49.5	3,595	50.8	3,690	63,300	105%
Shooters World Long Rifle	39.2	3,370	40.3	3,445	41.4	3,520	42.4	3,590	43.5	3,665	64,700	91%

64 gr Bullet · 25" barrel

COAL: 2.180" • Bullet length: 0.786" • Seat depth: 0.276" • Usable capacity: 52.8 / 55.6 gr H_2O

Powder	STEP 1 · 90%		STEP 2		STEP 3		STEP 4		STEP 5 · LIMIT			
	gr	fps	gr	fps	gr	fps	gr	fps	gr	fps	psi	Fill
Alliant Reloder 26	46.3	3,465	47.6	3,555	48.8	3,635	50.1	3,725	51.4	3,815	65,000	98%
Alliant Reloder 23	43.7	3,465	44.9	3,545	46.1	3,630	47.3	3,710	48.5	3,790	64,900	100%
Vihtavuori N560	46.1	3,445	47.4	3,530	48.7	3,615	49.9	3,690	51.2	3,780	64,700	101%
Hodgdon SUPERFORMANCE	43.9	3,430	45.1	3,515	46.3	3,595	47.6	3,685	48.8	3,770	64,800	90%
Accurate 2700	41.8	3,425	42.9	3,500	44.1	3,580	45.3	3,665	46.4	3,740	64,700	89%
Ramshot Grand	48.4	3,365	49.8	3,460	51.1	3,550	52.4	3,640	53.8	3,735	64,800	104%
Alliant Reloder 22	44.2	3,390	45.4	3,475	46.7	3,560	47.9	3,645	49.1	3,730	64,700	99%
Reload Swiss RS76	48.4	3,365	49.8	3,455	51.1	3,540	52.4	3,625	53.8	3,720	64,900	103%
IMR 4831	42.6	3,380	43.8	3,465	45.0	3,550	46.1	3,630	47.3	3,715	65,000	96%
Ramshot Hunter	42.5	3,390	43.7	3,470	44.9	3,550	46.0	3,625	47.2	3,705	65,000	95%
Winchester 760	41.4	3,395	42.5	3,470	43.7	3,550	44.9	3,630	46.0	3,705	64,900	90%
IMR 4350	41.2	3,380	42.4	3,460	43.5	3,535	44.6	3,610	45.8	3,690	64,900	93%
Ramshot Magnum	48.4	3,310	49.8	3,405	51.1	3,490	52.4	3,575	53.8	3,670	64,900	102%
Alliant Reloder 19	43.0	3,325	44.2	3,410	45.4	3,490	46.6	3,575	47.8	3,660	65,000	96%
Vihtavuori N160	42.3	3,345	43.5	3,425	44.6	3,500	45.8	3,580	47.0	3,660	64,900	97%
Winchester StaBALL HD	49.0	3,300	50.4	3,395	51.7	3,480	53.0	3,565	54.4	3,660	64,700	105%
Vihtavuori N165	44.7	3,315	46.0	3,400	47.2	3,480	48.5	3,565	49.7	3,645	64,700	101%
IMR 8133	48.0	3,255	49.3	3,340	50.6	3,430	52.0	3,525	53.3	3,615	64,000	105%
Shooters World SW4350	42.8	3,295	44.0	3,375	45.2	3,455	46.4	3,535	47.6	3,615	65,000	98%
Alliant Reloder 15	35.9	3,295	36.9	3,365	37.9	3,430	38.9	3,500	39.9	3,570	64,800	81%

70 gr Bullet · 25" barrel

COAL: 2.080" • Bullet length: 0.919" • Seat depth: 0.509" • Usable capacity: 50.9 / 55.6 gr H_2O

Powder	STEP 1 · 90%		STEP 2		STEP 3		STEP 4		STEP 5 · LIMIT			
	gr	fps	gr	fps	gr	fps	gr	fps	gr	fps	psi	Fill
Alliant Reloder 26	44.5	3,345	45.7	3,425	47.0	3,515	48.2	3,595	49.4	3,680	64,600	97%
Alliant Reloder 23	41.9	3,330	43.1	3,410	44.3	3,490	45.4	3,565	46.6	3,645	64,700	99%
Hodgdon SUPERFORMANCE	42.3	3,315	43.5	3,395	44.6	3,470	45.8	3,550	47.0	3,635	64,700	90%
Vihtavuori N560	44.2	3,320	45.4	3,395	46.7	3,475	47.9	3,555	49.1	3,635	64,700	101%
Vihtavuori N570	46.7	3,255	48.0	3,345	49.3	3,435	50.6	3,525	51.9	3,615	64,900	105%
Ramshot Grand	46.7	3,260	48.0	3,345	49.3	3,435	50.6	3,520	51.9	3,610	64,700	104%
Alliant Reloder 22	42.6	3,285	43.8	3,365	45.0	3,445	46.1	3,520	47.3	3,605	64,800	99%
Vihtavuori N565	45.5	3,250	46.8	3,340	48.0	3,420	49.3	3,505	50.6	3,595	64,800	104%
Accurate 4350	40.2	3,275	41.3	3,350	42.5	3,430	43.6	3,505	44.7	3,585	64,700	92%
Ramshot Hunter	40.9	3,265	42.0	3,335	43.1	3,410	44.3	3,490	45.4	3,565	64,900	95%
Hodgdon H4831SC	42.1	3,240	43.3	3,320	44.5	3,405	45.6	3,475	46.8	3,560	64,900	93%
Ramshot Magnum	46.7	3,215	48.0	3,300	49.3	3,385	50.6	3,470	51.9	3,560	64,900	102%
Winchester 760	39.8	3,265	40.9	3,340	42.0	3,415	43.1	3,485	44.2	3,560	64,900	89%
Alliant Power Pro 4000-MR	41.3	3,245	42.4	3,320	43.6	3,400	44.8	3,480	45.9	3,555	65,000	92%
Hodgdon H414	39.5	3,245	40.6	3,320	41.7	3,395	42.8	3,470	43.9	3,545	64,800	88%
IMR 4350	39.5	3,250	40.6	3,325	41.7	3,395	42.8	3,470	43.9	3,545	64,800	93%
Alliant Reloder 16	38.8	3,255	39.9	3,330	41.0	3,400	42.0	3,470	43.1	3,540	64,900	94%
Alliant Reloder 19	41.4	3,215	42.5	3,295	43.7	3,375	44.9	3,460	46.0	3,535	64,900	96%
Winchester StaBALL HD	47.2	3,195	48.5	3,280	49.8	3,365	51.1	3,450	52.4	3,535	64,400	105%
Vihtavuori N170	45.9	3,215	47.2	3,295	48.5	3,375	49.7	3,445	51.0	3,530	64,800	104%

77 gr Bullet · 25" barrel

COAL: 2.230" • Bullet length: 1.049" • Seat depth: 0.489" • Usable capacity: 51.0 / 55.6 gr H_2O

Powder	STEP 1 · 90%		STEP 2		STEP 3		STEP 4		STEP 5 · LIMIT			
	gr	fps	gr	fps	gr	fps	gr	fps	gr	fps	psi	Fill
Alliant Reloder 26	43.7	3,240	44.9	3,315	46.1	3,395	47.3	3,475	48.5	3,555	64,900	96%
Vihtavuori N570	45.7	3,180	47.0	3,265	48.3	3,350	49.5	3,430	50.8	3,515	64,800	103%
Ramshot Grand	46.1	3,170	47.4	3,255	48.7	3,340	49.9	3,415	51.2	3,505	64,800	102%
Alliant Reloder 23	41.0	3,200	42.1	3,270	43.3	3,350	44.5	3,425	45.6	3,500	64,700	97%
Hodgdon SUPERFORMANCE	41.5	3,195	42.6	3,270	43.8	3,345	45.0	3,425	46.1	3,500	65,000	89%
Hodgdon Retumbo	45.6	3,170	46.9	3,250	48.2	3,335	49.4	3,410	50.7	3,495	64,800	103%
Accurate MagPro	45.1	3,150	46.4	3,235	47.6	3,310	48.9	3,400	50.1	3,480	65,000	100%
Vihtavuori N560	42.9	3,180	44.1	3,250	45.3	3,325	46.5	3,400	47.7	3,475	65,000	98%
Alliant Reloder 22	41.7	3,170	42.9	3,245	44.0	3,320	45.1	3,390	46.3	3,470	64,700	96%
Ramshot Magnum	46.0	3,130	47.3	3,210	48.5	3,290	49.8	3,370	51.1	3,460	64,900	101%
Norma 204	40.6	3,155	41.7	3,225	42.9	3,305	44.0	3,375	45.1	3,450	64,900	93%
IMR 7828SSC	41.7	3,135	42.9	3,210	44.0	3,285	45.1	3,355	46.3	3,435	64,900	94%
Hodgdon H4831SC	41.3	3,130	42.4	3,200	43.6	3,275	44.8	3,355	45.9	3,430	64,900	91%
IMR 7828	42.5	3,125	43.7	3,200	44.9	3,280	46.0	3,350	47.2	3,430	64,900	93%
Norma MRP	41.5	3,135	42.6	3,205	43.8	3,280	45.0	3,360	46.1	3,430	65,000	94%
Hodgdon H1000	43.4	3,115	44.6	3,190	45.8	3,270	47.0	3,345	48.2	3,425	64,900	103%
Vihtavuori N170	44.7	3,085	46.0	3,160	47.2	3,230	48.5	3,305	49.7	3,380	64,900	101%
Vihtavuori N165	41.9	3,080	43.0	3,145	44.2	3,220	45.4	3,295	46.5	3,365	64,800	98%
Vihtavuori N160	39.5	3,080	40.6	3,150	41.7	3,220	42.8	3,290	43.9	3,360	64,700	93%
Shooters World SW4350	40.4	3,060	41.5	3,130	42.6	3,200	43.8	3,275	44.9	3,345	64,800	96%

.224 Valkyrie

Federal Premium Ammunition introduced the .224 Valkyrie in 2017 as a long-range .22-caliber cartridge for AR-15-type rifles. Ammunition reached dealers in 2018. It is based on the 6.8mm Remington SPC case necked down to hold .224-inch bullets. That case in turn descends from the .30 Remington. The design allows heavy high-ballistic-coefficient bullets to be loaded to an overall length that fits AR-15 magazines. SAAMI has standardized the cartridge.

Factory loads range from 60-grain bullets at about 3,300 fps to 90-grain match bullets at about 2,700 fps. That is the rated velocity of Federal's Gold Medal 90-grain Sierra MatchKing load. Heavy bullets require a fast-twist barrel. Shooters use the Valkyrie for long-range target shooting, steel matches and varmint and predator hunting. It gives AR-15 shooters a flatter trajectory and less wind drift than typical .223 Remington loads. Rifles, barrels and ammunition remain available from several manufacturers.

Cartridge specifications	
Bullet Diameter	**0.224" (5.69 mm)**
Max Case Length	**1.600" (40.64 mm)**
Case Trim Length	**1.590" (40.39 mm)**
Max COAL	**2.260" (57.40 mm)**
Primer Pocket	**Small Rifle**
Standard Twist	**1:7"**
Case Capacity	**31.2 gr H_2O**
Max Pressure	**55,000 psi (SAAMI)**

52 gr Bullet · 25" barrel

COAL: 2.110" • Bullet length: 0.750" • Seat depth: 0.240" • Usable capacity: 28.9 / 31.2 gr H_2O

Powder	STEP 1 · 90%		STEP 2		STEP 3		STEP 4		STEP 5 · LIMIT			
	gr	fps	gr	fps	gr	fps	gr	fps	gr	fps	psi	Fill
Hodgdon CFE BLK	23.0	3,325	23.6	3,390	24.3	3,470	24.9	3,535	25.5	3,600	55,000	91%
Vihtavuori N530	25.4	3,255	26.1	3,330	26.8	3,410	27.5	3,485	28.2	3,560	54,600	105%
Accurate 2460	25.7	3,210	26.4	3,280	27.1	3,350	27.9	3,435	28.6	3,505	54,600	99%
Vihtavuori N135	25.1	3,215	25.8	3,285	26.5	3,360	27.2	3,435	27.9	3,505	52,500	105%
Ramshot TAC	25.7	3,205	26.4	3,275	27.1	3,350	27.8	3,425	28.5	3,500	53,800	105%
Reload Swiss RS40	24.1	3,205	24.8	3,280	25.5	3,355	26.1	3,420	26.8	3,500	54,500	98%
Alliant Power Pro 1200-R	23.5	3,210	24.1	3,275	24.8	3,350	25.5	3,430	26.1	3,495	54,600	92%
Accurate 2230	25.2	3,195	25.9	3,265	26.6	3,335	27.3	3,410	28.0	3,480	54,500	98%
Winchester 748	26.6	3,155	27.3	3,230	28.1	3,315	28.8	3,390	29.5	3,465	54,700	105%
Ramshot X-Terminator	24.8	3,170	25.5	3,240	26.2	3,310	26.9	3,385	27.6	3,455	54,800	97%
Hodgdon Benchmark	24.7	3,160	25.4	3,235	26.0	3,295	26.7	3,370	27.4	3,445	55,000	104%
Hodgdon H4895	24.9	3,145	25.6	3,220	26.3	3,295	27.0	3,370	27.7	3,445	54,700	99%
Shooters World The Patriot	24.3	3,155	25.0	3,230	25.6	3,290	26.3	3,365	27.0	3,440	54,600	97%
Hodgdon Varget	26.2	3,120	26.9	3,195	27.6	3,270	28.4	3,360	29.1	3,435	54,900	105%
IMR 4895	25.8	3,125	26.5	3,195	27.3	3,280	28.0	3,355	28.7	3,430	54,900	103%
IMR 3031	24.3	3,130	25.0	3,205	25.6	3,270	26.3	3,345	27.0	3,425	54,600	100%
Alliant Power Pro Varmint	25.4	3,120	26.1	3,195	26.8	3,265	27.5	3,340	28.2	3,415	54,900	103%
Accurate 2015	23.7	3,120	24.4	3,200	25.0	3,265	25.6	3,330	26.3	3,405	54,600	94%
Hodgdon H335	24.8	3,100	25.5	3,175	26.2	3,250	26.9	3,320	27.6	3,395	54,600	94%
IMR 4064	25.5	3,055	26.2	3,125	26.9	3,200	27.6	3,270	28.3	3,345	51,800	105%

55 gr Bullet · 25" barrel

COAL: 2.060" • Bullet length: 0.723" • Seat depth: 0.263" • Usable capacity: 28.7 / 31.2 gr H_2O

Powder	STEP 1 · 90%		STEP 2		STEP 3		STEP 4		STEP 5 · LIMIT			
	gr	fps	gr	fps	gr	fps	gr	fps	gr	fps	psi	Fill
Alliant AR-Comp	25.0	3,225	25.7	3,300	26.4	3,375	27.1	3,445	27.8	3,520	54,900	104%
Hodgdon CFE BLK	22.5	3,215	23.1	3,280	23.8	3,355	24.4	3,420	25.0	3,490	54,700	90%
Vihtavuori N530	24.8	3,170	25.5	3,245	26.2	3,320	26.9	3,395	27.6	3,470	54,700	103%
Vihtavuori N135	24.9	3,160	25.6	3,230	26.3	3,300	27.0	3,375	27.7	3,445	54,200	105%
Ramshot TAC	25.5	3,145	26.2	3,220	26.9	3,295	27.6	3,365	28.3	3,440	54,900	105%
Accurate 2520	26.3	3,120	27.0	3,190	27.8	3,270	28.5	3,340	29.2	3,415	51,900	105%
Vihtavuori N140	26.6	3,110	27.3	3,185	28.1	3,265	28.8	3,340	29.5	3,415	54,600	105%
Hodgdon BL-C(2)	26.9	3,095	27.6	3,165	28.4	3,250	29.1	3,325	29.9	3,410	54,800	105%
Accurate 2230	24.7	3,105	25.4	3,175	26.0	3,235	26.7	3,305	27.4	3,375	54,500	97%
Hodgdon H4895	24.6	3,085	25.3	3,155	26.0	3,230	26.6	3,295	27.3	3,365	54,900	99%
Vihtavuori N133	23.6	3,090	24.3	3,165	24.9	3,230	25.6	3,300	26.2	3,365	53,800	105%
Hodgdon Varget	25.7	3,050	26.4	3,125	27.1	3,200	27.9	3,285	28.6	3,360	54,600	104%
Hodgdon Benchmark	24.1	3,065	24.8	3,140	25.5	3,215	26.1	3,275	26.8	3,350	54,600	103%
IMR 4895	25.4	3,060	26.1	3,130	26.8	3,205	27.5	3,275	28.2	3,350	54,800	102%
Ramshot X-Terminator	24.3	3,080	25.0	3,150	25.6	3,210	26.3	3,280	27.0	3,350	54,600	95%
Alliant Power Pro Varmint	24.9	3,040	25.6	3,110	26.3	3,185	27.0	3,255	27.7	3,330	54,500	102%
Hodgdon H335	24.5	3,035	25.2	3,110	25.9	3,180	26.5	3,245	27.2	3,315	54,700	94%
Accurate 2495	24.6	3,020	25.3	3,095	26.0	3,170	26.6	3,235	27.3	3,310	54,700	96%
Shooters World Tactical Rifle	24.3	3,025	25.0	3,100	25.6	3,165	26.3	3,240	27.0	3,310	55,000	97%
IMR 4064	25.3	3,015	26.0	3,090	26.7	3,160	27.4	3,235	28.1	3,305	53,400	105%

60 gr Bullet · 25" barrel

COAL: 2.100" • Bullet length: 0.897" • Seat depth: 0.397" • Usable capacity: 27.5 / 31.2 gr H_2O

Powder	STEP 1 · 90%		STEP 2		STEP 3		STEP 4		STEP 5 · LIMIT			
	gr	fps	gr	fps	gr	fps	gr	fps	gr	fps	psi	Fill
Alliant AR-Comp	23.8	3,060	24.4	3,120	25.1	3,195	25.8	3,265	26.4	3,330	54,500	103%
Vihtavuori N530	23.6	3,025	24.3	3,100	24.9	3,165	25.6	3,235	26.2	3,300	54,500	102%
Hodgdon CFE BLK	21.4	3,035	22.0	3,100	22.6	3,165	23.2	3,230	23.8	3,295	54,500	89%
Ramshot TAC	24.3	2,990	25.0	3,060	25.6	3,125	26.3	3,195	27.0	3,270	54,600	105%
Vihtavuori N140	25.4	2,975	26.1	3,045	26.8	3,120	27.5	3,190	28.2	3,265	54,700	105%
Accurate 2520	25.2	2,980	25.9	3,050	26.6	3,120	27.3	3,190	28.0	3,260	52,300	105%
Hodgdon BL-C(2)	25.7	2,955	26.4	3,030	27.1	3,100	27.9	3,185	28.6	3,260	54,600	104%
IMR 8208 XBR	23.9	2,980	24.5	3,040	25.2	3,115	25.9	3,190	26.5	3,250	54,900	105%
Accurate 2460	24.0	2,965	24.7	3,035	25.4	3,105	26.0	3,165	26.7	3,235	54,900	97%
Hodgdon Leverevolution	25.5	2,950	26.2	3,020	26.9	3,095	27.6	3,165	28.3	3,235	54,700	98%
Shooters World Match Rifle	24.8	2,945	25.5	3,015	26.1	3,080	26.8	3,150	27.5	3,225	55,000	103%
Hodgdon Varget	24.6	2,930	25.3	3,000	26.0	3,075	26.6	3,140	27.3	3,215	54,500	103%
Accurate 2230	23.5	2,945	24.1	3,000	24.8	3,075	25.5	3,145	26.1	3,205	54,800	96%
Hodgdon H4895	23.4	2,930	24.0	2,995	24.7	3,065	25.4	3,140	26.0	3,205	54,700	98%
Ramshot X-Terminator	23.1	2,920	23.8	2,990	24.4	3,050	25.1	3,120	25.7	3,180	54,900	95%
Alliant Power Pro Varmint	23.9	2,905	24.5	2,970	25.2	3,040	25.9	3,115	26.5	3,175	54,700	102%
IMR 4064	24.2	2,895	24.9	2,965	25.5	3,025	26.2	3,100	26.9	3,170	54,300	105%
Accurate 2495	23.5	2,885	24.1	2,945	24.8	3,020	25.5	3,095	26.1	3,160	54,800	96%
Hodgdon H335	23.4	2,890	24.0	2,950	24.7	3,025	25.4	3,095	26.0	3,160	54,700	94%
IMR 4320	24.6	2,860	25.3	2,935	26.0	3,010	26.6	3,070	27.3	3,145	54,600	100%

65 gr Bullet · 25" barrel

COAL: 2.100" • Bullet length: 0.803" • Seat depth: 0.303" • Usable capacity: 28.4 / 31.2 gr H_2O

Powder	STEP 1 · 90%		STEP 2		STEP 3		STEP 4		STEP 5 · LIMIT			
	gr	fps	gr	fps	gr	fps	gr	fps	gr	fps	psi	Fill
Accurate 2520	25.7	2,960	26.4	3,025	27.1	3,095	27.8	3,160	28.5	3,230	54,600	103%
Hodgdon CFE 223	26.3	2,935	27.0	3,005	27.8	3,085	28.5	3,155	29.2	3,225	52,200	105%
Alliant AR-Comp	23.7	2,965	24.4	3,030	25.0	3,090	25.6	3,150	26.3	3,220	54,700	99%
Hodgdon BL-C(2)	26.0	2,925	26.7	2,995	27.4	3,065	28.2	3,150	28.9	3,220	54,900	102%
Ramshot TAC	24.5	2,935	25.2	3,005	25.9	3,075	26.5	3,135	27.2	3,205	54,900	102%
Vihtavuori N530	23.3	2,940	23.9	3,000	24.6	3,070	25.3	3,140	25.9	3,200	54,700	98%
Reload Swiss RS52	25.5	2,915	26.2	2,985	26.9	3,055	27.6	3,125	28.3	3,195	54,900	105%
Winchester 748	25.2	2,910	25.9	2,980	26.6	3,050	27.3	3,120	28.0	3,190	54,800	101%
Vihtavuori N540	25.2	2,905	25.9	2,970	26.6	3,040	27.3	3,105	28.0	3,175	52,300	105%
Hodgdon Varget	24.8	2,895	25.5	2,965	26.1	3,025	26.8	3,095	27.5	3,165	54,900	101%
IMR 8208 XBR	23.8	2,905	24.4	2,965	25.1	3,030	25.8	3,100	26.4	3,160	54,700	101%
Shooters World Match Rifle	24.8	2,880	25.5	2,950	26.2	3,020	26.9	3,090	27.6	3,160	54,700	100%
Accurate 2460	23.9	2,880	24.5	2,935	25.2	3,005	25.9	3,070	26.5	3,130	54,700	94%
Hodgdon H4895	23.4	2,865	24.0	2,925	24.7	2,995	25.4	3,065	26.0	3,125	54,700	95%
Alliant Power Pro Varmint	23.9	2,840	24.6	2,910	25.3	2,980	25.9	3,040	26.6	3,110	54,800	99%
Hodgdon Benchmark	22.9	2,850	23.5	2,910	24.1	2,970	24.8	3,040	25.4	3,100	54,700	99%
Accurate 2495	23.6	2,835	24.3	2,905	24.9	2,965	25.6	3,035	26.2	3,095	54,600	93%
Reload Swiss RS50	25.5	2,815	26.2	2,885	26.9	2,950	27.6	3,020	28.3	3,090	52,200	105%
Accurate 2230	23.2	2,835	23.9	2,905	24.5	2,960	25.1	3,020	25.8	3,085	54,700	92%
Ramshot X-Terminator	23.0	2,830	23.6	2,890	24.3	2,955	24.9	3,015	25.5	3,070	55,000	91%

69 gr Bullet · 25" barrel

COAL: 2.157" • Bullet length: 0.962" • Seat depth: 0.405" • Usable capacity: 27.4 / 31.2 gr H_2O

Powder	STEP 1 · 90%		STEP 2		STEP 3		STEP 4		STEP 5 · LIMIT			
	gr	fps	gr	fps	gr	fps	gr	fps	gr	fps	psi	Fill
Accurate 2520	24.8	2,850	25.5	2,915	26.1	2,975	26.8	3,045	27.5	3,110	54,500	103%
Hodgdon CFE 223	25.4	2,835	26.1	2,900	26.8	2,970	27.5	3,040	28.2	3,110	52,300	105%
Hodgdon BL-C(2)	25.1	2,825	25.8	2,895	26.5	2,965	27.2	3,035	27.9	3,105	54,800	102%
Alliant AR-Comp	22.8	2,840	23.4	2,900	24.1	2,970	24.7	3,030	25.3	3,090	54,700	99%
Reload Swiss RS52	24.6	2,810	25.3	2,880	26.0	2,950	26.6	3,010	27.3	3,085	54,800	105%
Ramshot TAC	23.6	2,820	24.3	2,890	24.9	2,950	25.6	3,020	26.2	3,080	54,600	102%
Vihtavuori N140	24.5	2,815	25.2	2,880	25.9	2,950	26.5	3,010	27.2	3,080	54,600	101%
Vihtavuori N530	22.4	2,830	23.0	2,890	23.6	2,950	24.3	3,020	24.9	3,080	54,700	98%
Hodgdon Leverevolution	24.8	2,805	25.5	2,875	26.1	2,935	26.8	3,005	27.5	3,070	55,000	96%
Norma 202	23.7	2,810	24.4	2,880	25.0	2,935	25.6	2,995	26.3	3,065	54,700	104%
Vihtavuori N540	24.3	2,800	25.0	2,865	25.6	2,925	26.3	2,990	27.0	3,060	52,600	105%
Hodgdon Varget	23.9	2,790	24.5	2,850	25.2	2,925	25.9	2,995	26.5	3,055	54,800	101%
Vihtavuori N135	22.7	2,800	23.3	2,855	23.9	2,915	24.6	2,985	25.2	3,045	54,700	100%
IMR 8208 XBR	22.9	2,790	23.5	2,850	24.1	2,910	24.8	2,980	25.4	3,040	54,700	101%
IMR 4166	23.3	2,750	23.9	2,810	24.6	2,880	25.3	2,950	25.9	3,015	54,600	105%
Hodgdon H4895	22.6	2,760	23.2	2,820	23.9	2,890	24.5	2,950	25.1	3,010	54,900	95%
IMR 4895	23.3	2,755	23.9	2,810	24.6	2,880	25.3	2,950	25.9	3,010	54,800	98%
Accurate 2460	23.0	2,765	23.6	2,820	24.3	2,890	24.9	2,950	25.5	3,005	54,800	93%
Norma 203B	23.8	2,740	24.4	2,800	25.1	2,870	25.8	2,940	26.4	3,005	52,000	105%
IMR 4064	23.3	2,740	23.9	2,800	24.6	2,870	25.3	2,935	25.9	2,995	54,900	101%

77 gr Bullet · 25" barrel

COAL: 2.160" • Bullet length: 1.066" • Seat depth: 0.506" • Usable capacity: 26.4 / 31.2 gr H_2O

Powder	STEP 1 · 90%		STEP 2		STEP 3		STEP 4		STEP 5 · LIMIT			
	gr	fps	gr	fps	gr	fps	gr	fps	gr	fps	psi	Fill
Hodgdon CFE 223	24.4	2,690	25.1	2,760	25.8	2,825	26.4	2,885	27.1	2,955	53,400	105%
Hodgdon BL-C(2)	24.0	2,675	24.7	2,740	25.4	2,810	26.0	2,870	26.7	2,940	55,000	102%
Accurate 2520	23.6	2,680	24.3	2,745	24.9	2,800	25.6	2,870	26.2	2,925	54,700	102%
Reload Swiss RS52	23.5	2,660	24.1	2,720	24.8	2,790	25.5	2,855	26.1	2,920	54,900	104%
Vihtavuori N140	23.3	2,650	23.9	2,710	24.6	2,775	25.3	2,845	25.9	2,905	55,000	100%
Winchester 748	23.2	2,650	23.9	2,720	24.5	2,780	25.1	2,840	25.8	2,905	54,900	101%
Hodgdon Leverevolution	23.6	2,645	24.3	2,715	24.9	2,770	25.6	2,840	26.2	2,900	54,800	95%
Vihtavuori N540	23.3	2,655	23.9	2,710	24.6	2,775	25.3	2,840	25.9	2,900	54,700	104%
Ramshot TAC	22.5	2,650	23.1	2,710	23.8	2,780	24.4	2,835	25.0	2,895	54,700	101%
Alliant AR-Comp	21.5	2,640	22.1	2,700	22.7	2,760	23.3	2,820	23.9	2,880	54,600	97%
Hodgdon Varget	22.7	2,630	23.3	2,690	23.9	2,750	24.6	2,820	25.2	2,880	54,700	99%
Norma 202	22.4	2,630	23.0	2,685	23.6	2,745	24.3	2,810	24.9	2,870	54,900	102%
IMR 8208 XBR	21.6	2,610	22.2	2,670	22.8	2,725	23.4	2,785	24.0	2,845	54,500	99%
Reload Swiss RS40	20.9	2,615	21.5	2,675	22.0	2,725	22.6	2,785	23.2	2,845	54,700	93%
IMR 4166	22.2	2,590	22.8	2,650	23.4	2,710	24.1	2,780	24.7	2,840	54,600	104%
IMR 4320	22.9	2,585	23.5	2,645	24.1	2,705	24.8	2,770	25.4	2,830	54,700	97%
IMR 4064	22.1	2,585	22.7	2,640	23.3	2,700	23.9	2,755	24.5	2,815	54,900	99%
Accurate 2460	21.7	2,575	22.3	2,635	22.9	2,690	23.5	2,745	24.1	2,805	54,900	92%
Accurate 4064	22.4	2,550	23.0	2,610	23.6	2,670	24.3	2,735	24.9	2,795	54,600	105%
Alliant Reloder 17	24.1	2,520	24.8	2,590	25.5	2,660	26.1	2,720	26.8	2,790	55,000	102%

90 gr Bullet · 25" barrel

COAL: 2.260" • Bullet length: 1.235" • Seat depth: 0.575" • Usable capacity: 25.8 / 31.2 gr H_2O

Powder	STEP 1 · 90%		STEP 2		STEP 3		STEP 4		STEP 5 · LIMIT			
	gr	fps	gr	fps	gr	fps	gr	fps	gr	fps	psi	Fill
Hodgdon CFE 223	23.4	2,510	24.0	2,565	24.7	2,630	25.4	2,695	26.0	2,755	54,900	103%
Alliant Reloder 15	22.5	2,505	23.1	2,565	23.8	2,630	24.4	2,685	25.0	2,740	54,900	104%
Hodgdon BL-C(2)	22.9	2,485	23.5	2,540	24.1	2,600	24.8	2,665	25.4	2,720	54,700	99%
Hodgdon H4350	24.1	2,465	24.8	2,530	25.5	2,595	26.1	2,650	26.8	2,715	53,800	105%
Reload Swiss RS52	22.3	2,465	22.9	2,520	23.6	2,585	24.2	2,645	24.8	2,700	54,800	101%
Norma 201	21.0	2,460	21.6	2,520	22.1	2,570	22.7	2,625	23.3	2,685	54,900	100%
Accurate 2520	22.2	2,450	22.8	2,505	23.4	2,560	24.1	2,625	24.7	2,680	54,700	99%
Ramshot Big Game	23.9	2,440	24.5	2,495	25.2	2,560	25.9	2,625	26.5	2,680	53,100	105%
Winchester 748	22.0	2,450	22.6	2,505	23.2	2,565	23.8	2,620	24.4	2,680	54,400	97%
Hodgdon Leverevolution	22.3	2,440	22.9	2,495	23.6	2,560	24.2	2,620	24.8	2,675	54,600	92%
Ramshot TAC	21.3	2,435	21.9	2,490	22.5	2,545	23.1	2,605	23.7	2,660	54,700	98%
Hodgdon Varget	21.4	2,425	22.0	2,480	22.6	2,540	23.2	2,595	23.8	2,655	54,600	96%
Reload Swiss RS50	22.8	2,415	23.4	2,470	24.1	2,535	24.7	2,590	25.3	2,645	55,000	103%
Accurate 2700	23.9	2,395	24.5	2,450	25.2	2,515	25.9	2,580	26.5	2,635	52,300	105%
IMR 4320	21.8	2,400	22.4	2,455	23.0	2,515	23.6	2,570	24.2	2,630	54,800	95%
Vihtavuori N540	21.7	2,415	22.3	2,470	22.9	2,525	23.5	2,575	24.1	2,630	54,700	99%
IMR 4166	21.2	2,405	21.8	2,460	22.4	2,520	22.9	2,565	23.5	2,625	55,000	101%
Alliant AR-Comp	20.2	2,400	20.8	2,455	21.3	2,505	21.8	2,550	22.4	2,610	55,000	93%
Norma 202	21.0	2,400	21.6	2,455	22.1	2,500	22.7	2,555	23.3	2,610	54,900	98%
IMR 4064	20.6	2,360	21.2	2,415	21.8	2,470	22.3	2,520	22.9	2,575	54,600	95%

.224 Weatherby Magnum

Weatherby began production of the .224 Weatherby Magnum in 1963 alongside its Varmintmaster bolt-action rifle. The Varmintmaster was a scaled-down version of the Mark V. The cartridge uses a small proprietary belted case with Weatherby's characteristic double-radius shoulder. It is not derived from any earlier commercial cartridge. Weatherby originally marketed it as the .224 Weatherby Varmintmaster. Its development took several years. Part of the delay came from the lack of a suitably sized action.

Factory ammunition launches a 55-grain bullet at about 3,650 fps. That places the cartridge in the same performance class as the .22-250 Remington. It was used mainly for varmint and predator hunting. Weatherby discontinued the Varmintmaster rifle in 1994 and the chambering then became uncommon. In 2025 Weatherby reintroduced rifles in this chambering. It remains a proprietary cartridge that few other manufacturers support.

Cartridge specifications	
Bullet Diameter	**0.224" (5.69 mm)**
Max Case Length	**1.923" (48.84 mm)**
Case Trim Length	**1.913" (48.60 mm)**
Max COAL	**2.330" (59.18 mm)**
Primer Pocket	**Large Rifle**
Standard Twist	**1:14"**
Case Capacity	**38.3 gr H_2O**
Max Pressure	**4,400 bar / 63,817 psi (C.I.P.)**

40 gr Bullet · 25" barrel

COAL: 2.263" • Bullet length: 0.564" • Seat depth: 0.224" • Usable capacity: 36.2 / 38.3 gr H_2O

Powder	STEP 1 · 90%		STEP 2		STEP 3		STEP 4		STEP 5 · LIMIT			
	gr	fps	gr	fps	gr	fps	gr	fps	gr	fps	psi	Fill
Hodgdon CFE BLK	28.5	4,020	29.3	4,100	30.1	4,185	30.9	4,270	31.7	4,355	63,600	90%
Alliant AR-Comp	31.2	3,945	32.1	4,040	33.0	4,130	33.8	4,210	34.7	4,305	63,600	103%
Hodgdon Leverevolution	34.7	3,895	35.7	3,995	36.6	4,090	37.5	4,180	38.5	4,285	63,600	101%
Vihtavuori N530	31.5	3,875	32.4	3,970	33.3	4,065	34.1	4,150	35.0	4,245	63,700	104%
Vihtavuori N135	31.5	3,890	32.4	3,980	33.3	4,070	34.1	4,150	35.0	4,240	62,400	105%
Reload Swiss RS40	30.1	3,880	30.9	3,965	31.8	4,060	32.6	4,140	33.4	4,225	63,600	98%
Vihtavuori N130	28.4	3,895	29.2	3,980	29.9	4,055	30.7	4,140	31.5	4,225	63,600	100%
IMR 4895	32.9	3,820	33.8	3,910	34.8	4,015	35.7	4,105	36.6	4,200	63,500	104%
Hodgdon Benchmark	31.1	3,810	32.0	3,900	32.8	3,985	33.6	4,065	34.5	4,160	62,300	105%
Ramshot X-Terminator	31.0	3,830	31.9	3,915	32.7	3,995	33.5	4,070	34.4	4,160	63,400	96%
Winchester 748	32.9	3,770	33.8	3,865	34.8	3,965	35.7	4,060	36.6	4,155	63,500	104%
IMR 8208 XBR	31.5	3,790	32.4	3,880	33.3	3,975	34.1	4,055	35.0	4,150	62,700	105%
Vihtavuori N133	29.8	3,810	30.6	3,890	31.5	3,980	32.3	4,065	33.1	4,145	61,200	105%
Alliant Power Pro Varmint	31.9	3,780	32.8	3,870	33.6	3,950	34.5	4,045	35.4	4,135	63,600	103%
IMR 3031	30.5	3,765	31.4	3,860	32.2	3,945	33.0	4,030	33.9	4,120	63,500	100%
Hodgdon CFE 223	33.6	3,730	34.5	3,820	35.5	3,925	36.4	4,015	37.3	4,110	60,500	105%
Hodgdon H335	31.1	3,765	32.0	3,855	32.8	3,935	33.6	4,020	34.5	4,110	63,600	94%
IMR 4198	26.6	3,785	27.3	3,860	28.1	3,945	28.8	4,020	29.5	4,095	63,800	98%
Hodgdon Varget	32.5	3,705	33.4	3,800	34.3	3,895	35.2	3,990	36.1	4,085	63,800	104%
IMR 4320	32.4	3,665	33.3	3,760	34.2	3,855	35.1	3,950	36.0	4,045	63,700	100%

50 gr Bullet · 25" barrel

COAL: 2.310" • Bullet length: 0.698" • Seat depth: 0.310" • Usable capacity: 35.3 / 38.3 gr H_2O

Powder	STEP 1 · 90%		STEP 2		STEP 3		STEP 4		STEP 5 · LIMIT			
	gr	fps	gr	fps	gr	fps	gr	fps	gr	fps	psi	Fill
Hodgdon Leverevolution	33.0	3,620	33.9	3,705	34.9	3,805	35.8	3,890	36.7	3,980	63,800	99%
Accurate 2520	32.0	3,600	32.9	3,685	33.8	3,770	34.6	3,845	35.5	3,930	63,600	103%
Hodgdon CFE BLK	26.7	3,595	27.4	3,665	28.2	3,745	28.9	3,815	29.7	3,895	63,300	87%
Vihtavuori N530	29.3	3,565	30.1	3,645	30.9	3,725	31.7	3,805	32.5	3,885	63,800	99%
Alliant AR-Comp	29.2	3,570	30.0	3,650	30.8	3,725	31.6	3,800	32.4	3,880	63,400	98%
Hodgdon CFE 223	32.5	3,530	33.4	3,615	34.3	3,705	35.2	3,790	36.1	3,880	63,600	104%
IMR 4895	31.1	3,545	32.0	3,630	32.9	3,715	33.7	3,795	34.6	3,880	63,800	101%
Vihtavuori N140	31.7	3,525	32.6	3,610	33.5	3,700	34.3	3,775	35.2	3,865	63,400	102%
Winchester 748	31.4	3,520	32.3	3,610	33.1	3,685	34.0	3,775	34.9	3,865	63,800	102%
IMR 4064	31.1	3,505	32.0	3,590	32.8	3,665	33.6	3,745	34.5	3,830	63,800	104%
IMR 8208 XBR	29.7	3,505	30.5	3,580	31.4	3,670	32.2	3,745	33.0	3,825	63,500	101%
IMR 3031	28.9	3,485	29.7	3,565	30.5	3,640	31.3	3,720	32.1	3,800	63,800	97%
Vihtavuori N133	28.3	3,500	29.1	3,575	29.9	3,655	30.6	3,720	31.4	3,800	63,300	102%
Accurate 2230	29.2	3,480	30.0	3,550	30.8	3,625	31.6	3,700	32.4	3,775	63,700	93%
Hodgdon H335	29.4	3,455	30.2	3,530	31.1	3,620	31.9	3,695	32.7	3,770	63,700	91%
Shooters World The Patriot	28.6	3,465	29.4	3,540	30.2	3,620	31.0	3,695	31.8	3,770	63,700	94%
Shooters World The Creed	31.7	3,420	32.6	3,505	33.5	3,595	34.3	3,670	35.2	3,760	63,600	104%
Ramshot X-Terminator	28.8	3,455	29.6	3,530	30.4	3,605	31.2	3,680	32.0	3,755	63,400	92%
Alliant Reloder 7	25.6	3,450	26.3	3,520	27.0	3,590	27.7	3,660	28.4	3,730	63,500	85%
IMR 4198	24.7	3,395	25.4	3,465	26.0	3,525	26.7	3,595	27.4	3,665	63,600	93%

55 gr Bullet · 25" barrel

COAL: 2.330" • Bullet length: 0.722" • Seat depth: 0.315" • Usable capacity: 35.3 / 38.3 gr H_2O

Powder	STEP 1 · 90%		STEP 2		STEP 3		STEP 4		STEP 5 · LIMIT			
	gr	fps	gr	fps	gr	fps	gr	fps	gr	fps	psi	Fill
Hodgdon Leverevolution	32.4	3,500	33.3	3,585	34.2	3,670	35.1	3,755	36.0	3,840	63,400	97%
Accurate 2520	31.3	3,460	32.2	3,545	33.0	3,615	33.9	3,700	34.8	3,785	63,600	101%
Vihtavuori N540	31.3	3,445	32.2	3,525	33.0	3,600	33.9	3,680	34.8	3,765	61,000	105%
Alliant Reloder 15	31.2	3,430	32.1	3,510	33.0	3,595	33.8	3,670	34.7	3,755	63,400	105%
Hodgdon CFE 223	32.0	3,425	32.9	3,510	33.8	3,595	34.6	3,665	35.5	3,755	63,700	102%
Reload Swiss RS52	31.1	3,410	32.0	3,500	32.9	3,585	33.7	3,660	34.6	3,750	63,600	103%
IMR 4895	30.4	3,420	31.3	3,500	32.1	3,575	32.9	3,650	33.8	3,735	63,500	99%
Winchester 748	30.9	3,415	31.8	3,500	32.6	3,575	33.4	3,650	34.3	3,735	63,800	100%
Vihtavuori N140	31.1	3,415	32.0	3,495	32.8	3,570	33.6	3,645	34.5	3,730	63,500	100%
Norma 202	30.1	3,415	30.9	3,490	31.8	3,570	32.6	3,645	33.4	3,720	63,800	103%
Alliant AR-Comp	28.4	3,410	29.2	3,480	30.0	3,555	30.8	3,630	31.6	3,705	63,500	96%
Hodgdon H4895	29.2	3,400	30.0	3,475	30.8	3,550	31.6	3,625	32.4	3,705	63,500	95%
Norma 201	29.6	3,380	30.4	3,455	31.3	3,545	32.1	3,625	32.9	3,705	63,500	103%
IMR 4064	30.3	3,380	31.2	3,465	32.0	3,535	32.9	3,620	33.7	3,695	63,800	102%
Vihtavuori N135	28.7	3,390	29.5	3,465	30.3	3,540	31.1	3,610	31.9	3,685	63,400	98%
IMR 3031	28.3	3,355	29.1	3,435	29.9	3,510	30.6	3,575	31.4	3,655	63,400	95%
IMR 4320	30.4	3,325	31.3	3,410	32.1	3,485	32.9	3,565	33.8	3,650	63,700	96%
Shooters World The Creed	31.1	3,320	32.0	3,405	32.9	3,490	33.7	3,565	34.6	3,650	63,700	102%
Vihtavuori N133	27.6	3,350	28.4	3,425	29.1	3,490	29.9	3,565	30.7	3,640	63,800	100%
Hodgdon H335	28.8	3,325	29.6	3,400	30.4	3,475	31.2	3,545	32.0	3,620	63,300	90%

60 gr Bullet · 25" barrel

COAL: 2.330" • Bullet length: 0.788" • Seat depth: 0.381" • Usable capacity: 35.0 / 38.3 gr H_2O

Powder	STEP 1 · 90%		STEP 2		STEP 3		STEP 4		STEP 5 · LIMIT			
	gr	fps	gr	fps	gr	fps	gr	fps	gr	fps	psi	Fill
Hodgdon Leverevolution	31.8	3,395	32.7	3,480	33.5	3,550	34.4	3,635	35.3	3,720	63,800	96%
Vihtavuori N540	30.9	3,355	31.8	3,435	32.6	3,505	33.4	3,575	34.3	3,655	63,700	104%
Accurate 2520	30.5	3,330	31.4	3,410	32.2	3,480	33.0	3,550	33.9	3,635	63,500	100%
Hodgdon CFE 223	31.2	3,305	32.1	3,385	33.0	3,465	33.8	3,540	34.7	3,625	63,500	101%
Reload Swiss RS52	30.5	3,310	31.4	3,395	32.2	3,465	33.0	3,540	33.9	3,625	63,700	102%
Alliant Reloder 15	30.4	3,310	31.3	3,395	32.1	3,465	32.9	3,540	33.8	3,620	63,700	103%
Winchester 748	30.2	3,300	31.0	3,375	31.9	3,455	32.7	3,530	33.5	3,605	63,400	99%
IMR 4895	29.6	3,295	30.4	3,365	31.3	3,450	32.1	3,525	32.9	3,595	63,500	97%
Ramshot TAC	28.9	3,275	29.7	3,350	30.5	3,420	31.3	3,495	32.1	3,570	63,600	98%
Norma 202	29.2	3,275	30.0	3,345	30.8	3,420	31.6	3,490	32.4	3,565	63,500	101%
Ramshot Big Game	32.4	3,240	33.3	3,320	34.2	3,400	35.1	3,485	36.0	3,565	61,500	105%
IMR 4064	29.4	3,255	30.2	3,325	31.1	3,410	31.9	3,480	32.7	3,555	63,400	100%
Vihtavuori N135	27.9	3,255	28.7	3,325	29.4	3,390	30.2	3,460	31.0	3,535	63,700	96%
IMR 3031	27.6	3,235	28.4	3,310	29.1	3,375	29.9	3,445	30.7	3,525	63,800	94%
Hodgdon Benchmark	27.7	3,235	28.5	3,310	29.3	3,385	30.0	3,450	30.8	3,520	63,400	97%
Accurate 2460	28.4	3,225	29.2	3,295	29.9	3,360	30.7	3,430	31.5	3,500	63,500	90%
Hodgdon H335	28.2	3,205	29.0	3,280	29.8	3,355	30.5	3,415	31.3	3,490	63,600	88%
Vihtavuori N133	26.8	3,210	27.6	3,280	28.3	3,345	29.1	3,420	29.8	3,485	63,700	98%
Winchester 760	32.1	3,130	33.0	3,210	33.9	3,290	34.8	3,370	35.7	3,455	60,900	105%
Alliant Reloder 7	24.2	3,145	24.9	3,215	25.5	3,270	26.2	3,340	26.9	3,405	63,700	82%

63 gr Bullet · 25" barrel

COAL: 2.330" • Bullet length: 0.803" • Seat depth: 0.396" • Usable capacity: 34.6 / 38.3 gr H_2O

Powder	STEP 1 · 90%		STEP 2		STEP 3		STEP 4		STEP 5 · LIMIT			
	gr	fps	gr	fps	gr	fps	gr	fps	gr	fps	psi	Fill
Hodgdon Leverevolution	31.2	3,315	32.1	3,395	33.0	3,480	33.8	3,550	34.7	3,635	63,700	96%
Vihtavuori N540	30.2	3,265	31.1	3,345	31.9	3,410	32.8	3,490	33.6	3,565	63,600	103%
Hodgdon CFE 223	30.8	3,240	31.7	3,325	32.5	3,395	33.4	3,475	34.2	3,550	63,800	101%
Accurate 2520	30.0	3,255	30.8	3,325	31.6	3,395	32.5	3,475	33.3	3,545	63,400	99%
Reload Swiss RS52	30.0	3,240	30.8	3,310	31.6	3,385	32.5	3,470	33.3	3,545	63,400	101%
Hodgdon BL-C(2)	30.3	3,225	31.2	3,310	32.0	3,380	32.9	3,465	33.7	3,540	63,400	98%
Alliant Reloder 15	29.8	3,235	30.6	3,305	31.5	3,385	32.3	3,460	33.1	3,530	63,500	102%
Norma 201	28.4	3,210	29.2	3,285	30.0	3,365	30.8	3,440	31.6	3,520	63,600	101%
IMR 4895	29.1	3,225	29.9	3,295	30.7	3,365	31.5	3,440	32.3	3,515	63,700	97%
Ramshot Big Game	32.0	3,190	32.9	3,265	33.8	3,345	34.7	3,425	35.6	3,505	62,200	105%
Alliant Power Pro 2000-MR	31.1	3,195	32.0	3,275	32.8	3,345	33.6	3,415	34.5	3,500	62,600	105%
Hodgdon H4895	27.9	3,195	28.7	3,265	29.4	3,330	30.2	3,400	31.0	3,475	63,500	93%
IMR 4064	28.9	3,185	29.7	3,260	30.5	3,330	31.3	3,400	32.1	3,475	63,500	99%
Accurate 4064	29.4	3,165	30.2	3,240	31.1	3,320	31.9	3,395	32.7	3,465	62,800	105%
IMR 4320	29.3	3,155	30.1	3,230	31.0	3,310	31.8	3,385	32.6	3,460	63,700	95%
Shooters World The Creed	29.9	3,155	30.7	3,225	31.6	3,310	32.4	3,380	33.2	3,455	63,500	100%
Alliant Power Pro Varmint	28.4	3,165	29.2	3,235	30.0	3,305	30.8	3,380	31.6	3,450	63,700	97%
IMR 3031	27.1	3,155	27.9	3,230	28.6	3,295	29.4	3,370	30.1	3,435	63,500	93%
Hodgdon H414	32.0	3,105	32.9	3,185	33.8	3,265	34.7	3,345	35.6	3,425	63,000	105%
Hodgdon H335	27.6	3,120	28.4	3,195	29.1	3,255	29.9	3,330	30.7	3,400	63,300	88%

.225 Winchester

Winchester introduced the .225 Winchester in 1964 as a varmint cartridge for its redesigned Model 70 rifle. It replaced the .220 Swift in the line. The semi-rimmed case has a rim sized to fit the standard .473-inch bolt face. Its body is modern and straight-tapered. Winchester originally announced several loads. Only the 55-grain soft-point load became a regular factory offering. It was later rated at 3,570 fps.

The .225 Winchester arrived a year before Remington standardized the .22-250 Remington. That long-established wildcat soon overshadowed it. Factory rifles included the Model 70, the Winchester Model 670 and the Savage Model 340. Winchester dropped the chambering from its rifles in 1971. The company still produces ammunition and brass periodically. Reloading dies remain widely available. Handloaders and owners of older rifles largely keep the cartridge in use. The case also served as the parent for several of SSK Industries' JDJ handgun cartridges.

Cartridge specifications	
Bullet Diameter	**0.224" (5.69 mm)**
Max Case Length	**1.930" (49.02 mm)**
Case Trim Length	**1.920" (48.77 mm)**
Max COAL	**2.500" (63.50 mm)**
Primer Pocket	**Large Rifle**
Standard Twist	**1:14"**
Case Capacity	**40.3 gr H_2O**
Max Pressure	**3,900 bar / 56,565 psi (C.I.P.)**

40 gr Bullet · 25" barrel

COAL: 2.326" • Bullet length: 0.621" • Seat depth: 0.224" • Usable capacity: 38.2 / 40.3 gr H_2O

Powder	STEP 1 · 90%		STEP 2		STEP 3		STEP 4		STEP 5 · LIMIT			
	gr	fps	gr	fps	gr	fps	gr	fps	gr	fps	psi	Fill
Hodgdon CFE BLK	27.8	3,840	28.6	3,920	29.4	4,005	30.1	4,075	30.9	4,155	56,300	83%
Vihtavuori N540	33.9	3,775	34.9	3,870	35.8	3,950	36.8	4,050	37.7	4,135	55,900	105%
Alliant AR-Comp	30.5	3,780	31.4	3,870	32.2	3,945	33.0	4,020	33.9	4,110	56,400	95%
Hodgdon Leverevolution	34.0	3,735	35.0	3,830	35.9	3,920	36.8	4,005	37.8	4,105	56,200	95%
Vihtavuori N135	30.8	3,730	31.7	3,820	32.5	3,895	33.4	3,980	34.2	4,055	56,200	97%
Hodgdon H4895	31.2	3,700	32.1	3,790	33.0	3,875	33.8	3,955	34.7	4,045	56,200	94%
Norma 202	32.0	3,700	32.9	3,785	33.8	3,875	34.7	3,960	35.6	4,045	56,300	101%
Alliant Reloder 15	33.4	3,670	34.3	3,760	35.3	3,855	36.2	3,945	37.1	4,035	56,400	104%
Accurate 2230	30.9	3,715	31.8	3,800	32.6	3,875	33.4	3,945	34.3	4,030	56,300	91%
Accurate 2460	31.3	3,700	32.2	3,785	33.0	3,860	33.9	3,945	34.8	4,030	56,200	91%
Vihtavuori N140	32.9	3,640	33.8	3,725	34.8	3,825	35.7	3,910	36.6	4,000	56,400	98%
Hodgdon Benchmark	30.5	3,665	31.4	3,750	32.2	3,830	33.0	3,905	33.9	3,995	56,300	98%
Shooters World The Patriot	29.7	3,650	30.5	3,730	31.4	3,815	32.2	3,890	33.0	3,965	56,200	90%
Accurate 2520	31.8	3,630	32.7	3,715	33.5	3,790	34.4	3,875	35.3	3,960	56,300	95%
Alliant Power Pro Varmint	31.2	3,620	32.1	3,710	33.0	3,795	33.8	3,875	34.7	3,960	56,500	96%
IMR 4064	32.4	3,615	33.3	3,700	34.2	3,790	35.1	3,875	36.0	3,960	56,600	101%
IMR 3031	29.9	3,615	30.7	3,695	31.6	3,785	32.4	3,865	33.2	3,945	56,400	93%
Reload Swiss RS50	33.2	3,575	34.1	3,660	35.0	3,745	36.0	3,845	36.9	3,930	56,300	102%
Winchester StaBALL Match	32.1	3,575	33.0	3,660	33.9	3,750	34.8	3,840	35.7	3,925	55,100	105%
IMR 4320	31.8	3,520	32.7	3,610	33.5	3,690	34.4	3,780	35.3	3,870	56,300	93%

45 gr Bullet · 25" barrel

COAL: 2.240" • Bullet length: 0.580" • Seat depth: 0.270" • Usable capacity: 37.9 / 40.3 gr H_2O

Powder	STEP 1 · 90%		STEP 2		STEP 3		STEP 4		STEP 5 · LIMIT			
	gr	fps	gr	fps	gr	fps	gr	fps	gr	fps	psi	Fill
Vihtavuori N540	33.0	3,635	33.9	3,720	34.9	3,810	35.8	3,890	36.7	3,975	56,300	103%
Hodgdon Leverevolution	33.4	3,625	34.3	3,710	35.3	3,800	36.2	3,885	37.1	3,970	56,600	94%
Hodgdon CFE BLK	27.0	3,640	27.8	3,720	28.5	3,790	29.3	3,870	30.0	3,940	56,200	82%
Alliant AR-Comp	29.5	3,600	30.3	3,675	31.1	3,745	32.0	3,830	32.8	3,905	56,100	93%
Hodgdon H4895	30.5	3,575	31.4	3,660	32.2	3,735	33.0	3,810	33.9	3,895	56,500	93%
Alliant Reloder 15	32.4	3,550	33.3	3,630	34.2	3,715	35.1	3,800	36.0	3,885	56,300	101%
Norma 202	31.1	3,555	32.0	3,640	32.9	3,725	33.7	3,795	34.6	3,880	56,400	99%
IMR 4895	31.4	3,540	32.3	3,625	33.1	3,700	34.0	3,785	34.9	3,870	56,400	95%
Ramshot TAC	30.3	3,535	31.2	3,620	32.0	3,695	32.9	3,780	33.7	3,855	56,400	95%
Winchester 748	31.7	3,515	32.6	3,600	33.5	3,685	34.3	3,760	35.2	3,850	56,500	96%
IMR 8208 XBR	30.1	3,515	30.9	3,590	31.8	3,675	32.6	3,750	33.4	3,830	56,500	96%
IMR 4064	31.4	3,490	32.3	3,575	33.1	3,650	34.0	3,735	34.9	3,820	56,300	99%
Accurate 2520	31.1	3,500	32.0	3,580	32.8	3,655	33.6	3,730	34.5	3,810	56,500	94%
Ramshot Big Game	34.4	3,460	35.4	3,550	36.3	3,635	37.3	3,725	38.2	3,810	56,400	103%
Alliant Power Pro 2000-MR	33.3	3,460	34.2	3,545	35.1	3,625	36.1	3,720	37.0	3,805	56,400	103%
IMR 3031	29.2	3,490	30.0	3,565	30.8	3,645	31.6	3,720	32.4	3,800	56,500	91%
Vihtavuori N150	31.9	3,470	32.8	3,555	33.6	3,630	34.5	3,715	35.4	3,800	55,000	105%
IMR 4320	31.1	3,410	32.0	3,495	32.9	3,585	33.7	3,660	34.6	3,750	56,300	92%
Shooters World The Creed	32.0	3,400	32.9	3,485	33.8	3,570	34.7	3,655	35.6	3,740	56,500	98%
Hodgdon H322	27.3	3,370	28.1	3,445	28.8	3,515	29.6	3,595	30.3	3,660	56,200	85%

50 gr Bullet · 25" barrel

COAL: 2.396" • Bullet length: 0.690" • Seat depth: 0.224" • Usable capacity: 38.2 / 40.3 gr H_2O

Powder	STEP 1 · 90%		STEP 2		STEP 3		STEP 4		STEP 5 · LIMIT			
	gr	fps	gr	fps	gr	fps	gr	fps	gr	fps	psi	Fill
Hodgdon Leverevolution	32.9	3,505	33.8	3,585	34.7	3,665	35.6	3,745	36.5	3,830	56,300	91%
Vihtavuori N540	32.2	3,490	33.1	3,565	34.0	3,645	34.9	3,725	35.8	3,805	56,500	100%
Vihtavuori N550	34.3	3,425	35.3	3,510	36.2	3,590	37.1	3,665	38.1	3,755	53,800	105%
Alliant Reloder 15	31.7	3,425	32.6	3,505	33.5	3,585	34.3	3,660	35.2	3,740	56,400	98%
Hodgdon CFE 223	32.4	3,415	33.3	3,495	34.2	3,575	35.1	3,660	36.0	3,740	56,200	96%
Hodgdon H4895	29.9	3,430	30.7	3,505	31.6	3,590	32.4	3,660	33.2	3,735	56,200	90%
Reload Swiss RS52	31.5	3,405	32.4	3,485	33.3	3,570	34.1	3,645	35.0	3,730	56,300	96%
IMR 4895	30.8	3,415	31.7	3,495	32.5	3,565	33.4	3,650	34.2	3,720	56,400	93%
Alliant AR-Comp	28.8	3,425	29.6	3,500	30.4	3,570	31.2	3,645	32.0	3,715	56,200	90%
Ramshot TAC	29.9	3,405	30.7	3,480	31.6	3,560	32.4	3,630	33.2	3,705	56,500	93%
Vihtavuori N150	31.6	3,390	32.5	3,470	33.4	3,550	34.2	3,620	35.1	3,705	56,400	103%
Winchester StaBALL 6.5	35.6	3,335	36.6	3,425	37.6	3,515	38.6	3,605	39.6	3,695	56,300	105%
IMR 4064	30.7	3,370	31.6	3,450	32.4	3,525	33.3	3,605	34.1	3,675	56,200	96%
Reload Swiss RS50	32.1	3,350	33.0	3,430	33.9	3,510	34.8	3,590	35.7	3,670	56,400	98%
Winchester 760	34.7	3,325	35.7	3,415	36.7	3,500	37.6	3,580	38.6	3,670	56,400	104%
Accurate 2520	30.4	3,355	31.3	3,430	32.1	3,500	32.9	3,575	33.8	3,650	56,400	91%
IMR 3031	28.6	3,350	29.4	3,425	30.2	3,500	31.0	3,575	31.8	3,650	56,300	89%
Accurate 2700	33.9	3,280	34.9	3,365	35.8	3,445	36.8	3,535	37.7	3,615	56,500	101%
Accurate 2015	27.6	3,305	28.4	3,380	29.1	3,450	29.9	3,520	30.7	3,595	56,400	83%
Hodgdon H380	32.3	3,225	33.2	3,300	34.1	3,380	35.0	3,465	35.9	3,545	56,200	100%

55 gr Bullet · 25" barrel

COAL: 2.420" • Bullet length: 0.722" • Seat depth: 0.232" • Usable capacity: 38.1 / 40.3 gr H_2O

Powder	STEP 1 · 90%		STEP 2		STEP 3		STEP 4		STEP 5 · LIMIT			
	gr	fps	gr	fps	gr	fps	gr	fps	gr	fps	psi	Fill
Hodgdon Leverevolution	32.2	3,380	33.1	3,455	34.0	3,535	34.9	3,615	35.8	3,695	56,200	90%
Vihtavuori N550	34.0	3,360	35.0	3,445	35.9	3,520	36.8	3,595	37.8	3,680	56,200	104%
Vihtavuori N540	31.3	3,345	32.2	3,425	33.0	3,490	33.9	3,565	34.8	3,645	56,500	97%
Hodgdon CFE 223	31.9	3,315	32.8	3,390	33.6	3,460	34.5	3,540	35.4	3,620	56,500	95%
Reload Swiss RS52	31.0	3,305	31.9	3,385	32.7	3,455	33.5	3,525	34.4	3,605	56,400	95%
Alliant Reloder 15	30.9	3,305	31.8	3,385	32.6	3,450	33.4	3,520	34.3	3,600	56,500	96%
Winchester StaBALL 6.5	35.1	3,265	36.1	3,350	37.0	3,425	38.0	3,515	39.0	3,600	56,300	103%
Hodgdon H4895	29.3	3,310	30.1	3,380	30.9	3,450	31.7	3,520	32.5	3,595	56,400	88%
Winchester 748	30.6	3,285	31.5	3,365	32.3	3,435	33.1	3,505	34.0	3,585	56,200	92%
IMR 4895	30.1	3,290	30.9	3,360	31.8	3,440	32.6	3,510	33.4	3,580	56,500	91%
Alliant Power Pro 2000-MR	32.3	3,260	33.2	3,340	34.1	3,420	35.0	3,495	35.9	3,575	56,400	99%
Vihtavuori N150	30.9	3,275	31.8	3,355	32.6	3,425	33.4	3,495	34.3	3,575	56,500	101%
Winchester 760	34.2	3,245	35.2	3,330	36.1	3,410	37.0	3,485	38.0	3,575	56,300	103%
Winchester StaBALL Match	30.8	3,260	31.7	3,340	32.5	3,410	33.4	3,490	34.2	3,560	56,400	101%
Accurate 4064	30.7	3,250	31.6	3,325	32.4	3,400	33.3	3,480	34.1	3,550	56,500	99%
IMR 4064	30.0	3,260	30.8	3,330	31.6	3,400	32.5	3,475	33.3	3,545	56,400	94%
Alliant Power Pro Varmint	29.3	3,235	30.1	3,305	31.0	3,380	31.8	3,455	32.6	3,525	56,400	90%
IMR 3031	28.0	3,225	28.8	3,300	29.6	3,375	30.3	3,435	31.1	3,505	56,200	87%
Vihtavuori N133	27.2	3,215	27.9	3,280	28.7	3,350	29.4	3,410	30.2	3,480	56,500	91%
Hodgdon H380	31.8	3,145	32.7	3,225	33.5	3,295	34.4	3,370	35.3	3,450	56,400	98%

60 gr Bullet · 25" barrel

COAL: 2.410" • Bullet length: 0.788" • Seat depth: 0.308" • Usable capacity: 37.4 / 40.3 gr H_2O

Powder	STEP 1 · 90%		STEP 2		STEP 3		STEP 4		STEP 5 · LIMIT			
	gr	fps	gr	fps	gr	fps	gr	fps	gr	fps	psi	Fill
Hodgdon Leverevolution	31.4	3,265	32.3	3,345	33.1	3,410	34.0	3,490	34.9	3,565	56,500	89%
Vihtavuori N550	32.9	3,240	33.8	3,315	34.8	3,395	35.7	3,470	36.6	3,545	56,400	103%
Vihtavuori N540	30.2	3,205	31.1	3,280	31.9	3,345	32.8	3,420	33.6	3,490	56,500	95%
Hodgdon CFE 223	31.0	3,195	31.9	3,270	32.7	3,340	33.5	3,405	34.4	3,485	56,400	94%
Winchester StaBALL 6.5	34.2	3,165	35.2	3,250	36.1	3,325	37.0	3,400	38.0	3,485	56,200	102%
Reload Swiss RS52	30.2	3,190	31.0	3,260	31.9	3,340	32.7	3,410	33.5	3,480	56,400	94%
Winchester 760	33.4	3,155	34.3	3,230	35.3	3,315	36.2	3,390	37.1	3,470	56,500	102%
Hodgdon H414	33.4	3,150	34.3	3,225	35.3	3,310	36.2	3,390	37.1	3,465	56,500	101%
Winchester 748	29.8	3,170	30.6	3,240	31.5	3,320	32.3	3,390	33.1	3,460	56,400	91%
Hodgdon H4895	28.4	3,175	29.2	3,250	29.9	3,310	30.7	3,380	31.5	3,450	56,500	87%
IMR 4895	29.1	3,160	29.9	3,230	30.7	3,300	31.5	3,370	32.3	3,440	56,500	89%
Winchester StaBALL Match	30.0	3,145	30.8	3,215	31.6	3,285	32.5	3,360	33.3	3,430	56,400	100%
IMR 4064	29.0	3,135	29.8	3,205	30.6	3,270	31.4	3,340	32.2	3,410	56,400	92%
Accurate 2700	32.5	3,095	33.4	3,170	34.3	3,245	35.2	3,320	36.1	3,400	56,200	98%
IMR 4320	29.4	3,100	30.2	3,170	31.1	3,250	31.9	3,320	32.7	3,390	56,300	88%
Shooters World The Creed	30.1	3,105	30.9	3,175	31.8	3,250	32.6	3,320	33.4	3,390	56,500	93%
Shooters World Precision Rifle	29.4	3,090	30.2	3,160	31.1	3,235	31.9	3,305	32.7	3,375	56,400	97%
IMR 3031	27.2	3,105	27.9	3,170	28.7	3,240	29.4	3,300	30.2	3,370	56,400	86%
Ramshot Hunter	33.3	3,040	34.2	3,115	35.1	3,190	36.1	3,275	37.0	3,350	54,300	105%
Hodgdon H380	30.9	3,045	31.8	3,120	32.6	3,190	33.4	3,255	34.3	3,335	56,400	97%

5.56x45mm NATO

The 5.56x45mm NATO cartridge grew out of the .223 Remington. Eugene Stoner and Remington developed that cartridge in the early 1960s. They aimed to meet a U.S. Army requirement for a lightweight high-velocity rifle cartridge. The .223 became the cartridge of the M16 rifle. In the late 1970s FN Herstal of Belgium developed the SS109 loading. On 28 October 1980 the 5.56x45mm NATO was standardized under STANAG 4172. It became NATO's second standard service rifle cartridge.

The SS109 load was adopted in the United States as M855. It fires a 62-grain bullet with a steel penetrator at about 3,025 fps from a 20-inch barrel. External case dimensions match the .223 Remington. The NATO chamber has a longer leade. Military ammunition is also loaded to a higher pressure specification. Firing 5.56mm NATO ammunition in a rifle chambered for .223 Remington is therefore not recommended. The reverse is acceptable. Shooters can fire .223 Remington ammunition in a 5.56mm NATO chamber. The cartridge remains the standard rifle cartridge of many armed forces.

Cartridge specifications	
Bullet Diameter	**0.224" (5.69 mm)**
Max Case Length	**1.760" (44.70 mm)**
Case Trim Length	**1.750" (44.45 mm)**
Max COAL	**2.260" (57.40 mm)**
Primer Pocket	**Small Rifle**
Standard Twist	**1:7"**
Case Capacity	**27.6 gr H_2O**
Max Pressure	**55,000 psi (SAAMI)**

55 gr Bullet · 25" barrel

COAL: 2.200" • Bullet length: 0.726" • Seat depth: 0.286" • Usable capacity: 24.9 / 27.6 gr H_2O

Powder	STEP 1 · 90%		STEP 2		STEP 3		STEP 4		STEP 5 · LIMIT			
	gr	fps	gr	fps	gr	fps	gr	fps	gr	fps	psi	Fill
Hodgdon CFE BLK	21.1	3,120	21.7	3,195	22.3	3,265	22.8	3,320	23.4	3,395	55,000	97%
Alliant Power Pro 1200-R	21.6	3,010	22.2	3,080	22.8	3,150	23.4	3,215	24.0	3,285	54,700	98%
Reload Swiss RS40	22.1	2,995	22.7	3,065	23.4	3,145	24.0	3,215	24.6	3,285	55,000	105%
Shooters World SBR-SOCOM	17.7	3,020	18.2	3,090	18.7	3,155	19.2	3,220	19.7	3,285	54,500	81%
Accurate 2230	23.2	3,000	23.9	3,075	24.5	3,140	25.1	3,205	25.8	3,280	53,700	105%
Norma 200	21.2	3,010	21.8	3,080	22.4	3,150	22.9	3,210	23.5	3,280	54,600	102%
Accurate 2460	23.4	2,985	24.0	3,050	24.7	3,125	25.4	3,200	26.0	3,270	52,800	105%
Ramshot X-Terminator	23.0	2,990	23.6	3,055	24.3	3,135	24.9	3,200	25.5	3,265	54,800	104%
Shooters World AR Plus	22.2	2,980	22.8	3,050	23.4	3,115	24.1	3,195	24.7	3,265	54,600	100%
Vihtavuori N130	20.4	2,975	21.0	3,050	21.5	3,105	22.1	3,180	22.7	3,250	53,000	105%
Shooters World The Patriot	22.2	2,950	22.8	3,015	23.4	3,080	24.1	3,160	24.7	3,230	54,600	103%
Alliant Reloder 10x	20.8	2,940	21.4	3,010	22.0	3,080	22.5	3,140	23.1	3,210	54,300	105%
Hodgdon H4895	22.7	2,925	23.3	2,990	23.9	3,060	24.6	3,140	25.2	3,205	51,800	105%
Hodgdon H335	22.9	2,910	23.5	2,980	24.1	3,045	24.8	3,120	25.4	3,190	54,500	101%
Accurate LT-32	20.9	2,915	21.5	2,985	22.0	3,045	22.6	3,115	23.2	3,185	54,900	103%
Accurate 2015	21.6	2,905	22.2	2,975	22.8	3,045	23.4	3,110	24.0	3,180	54,600	100%
Accurate 2495	23.0	2,895	23.6	2,965	24.3	3,045	24.9	3,110	25.5	3,180	55,000	103%
Hodgdon H322	21.5	2,895	22.1	2,965	22.7	3,035	23.3	3,105	23.9	3,175	54,400	102%
IMR 3031	22.0	2,900	22.6	2,970	23.2	3,035	23.8	3,105	24.4	3,175	53,300	105%
Shooters World Tactical Rifle	22.5	2,875	23.1	2,945	23.8	3,020	24.4	3,090	25.0	3,160	54,700	103%

60 gr Bullet · 25" barrel

COAL: 2.250" • Bullet length: 0.840" • Seat depth: 0.350" • Usable capacity: 24.3 / 27.6 gr H_2O

Powder	STEP 1 · 90%		STEP 2		STEP 3		STEP 4		STEP 5 · LIMIT			
	gr	fps	gr	fps	gr	fps	gr	fps	gr	fps	psi	Fill
Hodgdon CFE BLK	20.3	2,960	20.9	3,030	21.4	3,085	21.9	3,145	22.5	3,215	54,400	95%
Accurate 2460	22.8	2,880	23.4	2,940	24.1	3,015	24.7	3,080	25.3	3,145	54,700	104%
Alliant Power Pro 1200-R	20.9	2,885	21.5	2,950	22.0	3,010	22.6	3,075	23.2	3,145	54,900	97%
Reload Swiss RS40	21.4	2,870	22.0	2,935	22.6	3,005	23.2	3,075	23.8	3,140	55,000	104%
Norma 200	20.3	2,865	20.9	2,935	21.5	3,005	22.0	3,060	22.6	3,135	54,500	101%
Accurate 2230	22.4	2,865	23.0	2,930	23.6	2,990	24.3	3,065	24.9	3,130	54,500	104%
Shooters World AR Plus	21.5	2,855	22.1	2,920	22.7	2,985	23.3	3,055	23.9	3,120	54,600	100%
Vihtavuori N130	19.9	2,865	20.4	2,925	21.0	2,995	21.6	3,065	22.1	3,120	54,500	104%
Hodgdon H4895	22.1	2,825	22.7	2,890	23.4	2,970	24.0	3,035	24.6	3,105	53,100	105%
Ramshot X-Terminator	22.1	2,850	22.7	2,915	23.3	2,975	23.9	3,040	24.5	3,105	54,900	102%
Alliant Reloder 10x	20.2	2,825	20.8	2,895	21.3	2,955	21.8	3,015	22.4	3,085	54,700	104%
Shooters World The Patriot	21.4	2,810	22.0	2,875	22.6	2,940	23.2	3,010	23.8	3,075	54,400	102%
IMR 3031	21.4	2,800	22.0	2,865	22.6	2,935	23.2	3,000	23.8	3,070	54,700	105%
Accurate 2200	20.2	2,805	20.8	2,875	21.3	2,935	21.8	2,990	22.4	3,060	52,400	105%
Hodgdon H335	22.1	2,785	22.7	2,850	23.4	2,930	24.0	2,995	24.6	3,060	54,600	100%
Accurate 2495	22.1	2,770	22.7	2,835	23.4	2,915	24.0	2,980	24.6	3,050	54,400	102%
Alliant Reloder 7	19.2	2,810	19.7	2,865	20.3	2,935	20.8	2,995	21.3	3,050	54,700	93%
Accurate 2015	20.9	2,780	21.5	2,845	22.0	2,905	22.6	2,970	23.2	3,040	54,500	99%
Accurate LT-32	20.2	2,785	20.8	2,855	21.3	2,910	21.8	2,970	22.4	3,040	54,800	102%
Shooters World Tactical Rifle	21.8	2,765	22.4	2,835	23.0	2,900	23.6	2,965	24.2	3,035	54,700	102%

70 gr Bullet · 25" barrel

COAL: 2.230" • Bullet length: 0.962" • Seat depth: 0.492" • Usable capacity: 23.0 / 27.6 gr H_2O

Powder	STEP 1 · 90%		STEP 2		STEP 3		STEP 4		STEP 5 · LIMIT			
	gr	fps	gr	fps	gr	fps	gr	fps	gr	fps	psi	Fill
Hodgdon CFE BLK	18.9	2,690	19.4	2,745	19.9	2,805	20.5	2,870	21.0	2,930	54,600	94%
Hodgdon H4895	20.9	2,640	21.5	2,705	22.0	2,760	22.6	2,825	23.2	2,890	54,600	104%
Alliant AR-Comp	20.3	2,645	20.9	2,710	21.4	2,765	21.9	2,820	22.5	2,885	52,500	105%
Norma 200	18.9	2,640	19.4	2,695	19.9	2,755	20.5	2,820	21.0	2,880	55,000	99%
Reload Swiss RS40	20.0	2,640	20.6	2,705	21.1	2,760	21.6	2,815	22.2	2,880	54,500	102%
Alliant Power Pro 1200-R	19.4	2,640	19.9	2,695	20.4	2,755	21.0	2,820	21.5	2,875	54,500	95%
Shooters World AR Plus	20.2	2,630	20.8	2,695	21.3	2,750	21.8	2,805	22.4	2,875	54,800	98%
Accurate 2460	21.1	2,630	21.7	2,695	22.3	2,755	22.8	2,810	23.4	2,870	54,500	102%
Accurate 2230	20.7	2,610	21.3	2,675	21.9	2,735	22.4	2,790	23.0	2,850	54,500	101%
Accurate 2495	20.8	2,580	21.4	2,650	22.0	2,715	22.5	2,770	23.1	2,835	54,900	101%
Alliant Reloder 10x	18.8	2,595	19.3	2,650	19.9	2,720	20.4	2,780	20.9	2,835	54,500	102%
IMR 3031	20.0	2,585	20.6	2,655	21.1	2,710	21.6	2,765	22.2	2,830	54,500	103%
Ramshot X-Terminator	20.3	2,585	20.9	2,645	21.5	2,710	22.0	2,760	22.6	2,825	54,600	99%
Hodgdon H335	20.7	2,575	21.3	2,640	21.9	2,700	22.4	2,755	23.0	2,820	54,400	99%
Shooters World The Patriot	20.0	2,580	20.6	2,645	21.1	2,700	21.6	2,750	22.2	2,815	54,800	100%
Accurate 2015	19.6	2,560	20.2	2,625	20.7	2,680	21.3	2,745	21.8	2,805	54,900	98%
Shooters World Tactical Rifle	20.3	2,550	20.9	2,620	21.5	2,685	22.0	2,740	22.6	2,805	54,500	101%
IMR 4320	21.6	2,535	22.2	2,600	22.8	2,665	23.4	2,730	24.0	2,800	54,800	105%
Hodgdon H322	19.4	2,550	19.9	2,605	20.5	2,670	21.1	2,740	21.6	2,795	54,400	100%
Accurate LT-32	18.8	2,550	19.3	2,605	19.9	2,675	20.4	2,730	20.9	2,785	54,600	100%

75 gr Bullet · 25" barrel

COAL: 2.250" • Bullet length: 1.022" • Seat depth: 0.532" • Usable capacity: 22.6 / 27.6 gr H_2O

Powder	STEP 1 · 90%		STEP 2		STEP 3		STEP 4		STEP 5 · LIMIT			
	gr	fps	gr	fps	gr	fps	gr	fps	gr	fps	psi	Fill
Hodgdon Leverevolution	22.2	2,570	22.8	2,635	23.4	2,695	24.1	2,770	24.7	2,835	52,100	105%
Vihtavuori N530	19.8	2,560	20.4	2,625	20.9	2,680	21.4	2,735	22.0	2,800	52,100	105%
Alliant AR-Comp	19.9	2,560	20.4	2,615	21.0	2,675	21.6	2,740	22.1	2,795	54,900	105%
Hodgdon CFE BLK	18.3	2,570	18.8	2,625	19.3	2,680	19.8	2,735	20.3	2,795	54,300	93%
Hodgdon H4895	20.3	2,540	20.9	2,605	21.4	2,660	21.9	2,715	22.5	2,780	54,600	103%
Reload Swiss RS40	19.4	2,530	19.9	2,585	20.5	2,650	21.1	2,715	21.6	2,770	54,800	102%
Alliant Power Pro 1200-R	18.7	2,525	19.2	2,580	19.8	2,645	20.3	2,700	20.8	2,755	54,500	94%
Shooters World AR Plus	19.5	2,510	20.1	2,575	20.6	2,630	21.1	2,685	21.7	2,750	54,400	97%
Accurate 2460	20.3	2,510	20.9	2,570	21.5	2,630	22.0	2,685	22.6	2,745	54,400	100%
Accurate 2230	20.0	2,495	20.6	2,560	21.1	2,610	21.6	2,660	22.2	2,725	54,700	100%
Accurate 2495	20.2	2,490	20.8	2,555	21.3	2,605	21.8	2,660	22.4	2,725	54,600	100%
Hodgdon H335	20.2	2,485	20.8	2,550	21.3	2,600	21.8	2,655	22.4	2,720	54,800	98%
Hodgdon Varget	20.4	2,455	21.0	2,520	21.5	2,575	22.1	2,640	22.7	2,705	51,800	105%
IMR 8208 XBR	19.6	2,470	20.2	2,535	20.7	2,590	21.3	2,650	21.8	2,705	51,800	105%
Shooters World Tactical Rifle	19.8	2,465	20.4	2,530	20.9	2,585	21.4	2,640	22.0	2,705	54,900	100%
Ramshot X-Terminator	19.6	2,470	20.2	2,530	20.7	2,585	21.3	2,645	21.8	2,700	54,500	98%
Hodgdon Benchmark	19.3	2,470	19.8	2,525	20.4	2,585	20.9	2,640	21.4	2,695	51,600	105%
Shooters World The Patriot	19.4	2,475	19.9	2,525	20.4	2,580	21.0	2,645	21.5	2,695	54,800	99%
Hodgdon H322	18.9	2,455	19.4	2,510	19.9	2,565	20.5	2,630	21.0	2,685	54,700	99%
Accurate LT-32	18.3	2,450	18.8	2,505	19.3	2,565	19.8	2,620	20.3	2,675	54,700	99%

80 gr Bullet · 25" barrel

COAL: 2.260" • Bullet length: 1.152" • Seat depth: 0.652" • Usable capacity: 21.8 / 27.6 gr H_2O

Powder	STEP 1 · 90%		STEP 2		STEP 3		STEP 4		STEP 5 · LIMIT			
	gr	fps	gr	fps	gr	fps	gr	fps	gr	fps	psi	Fill
Hodgdon Leverevolution	21.5	2,485	22.1	2,550	22.7	2,615	23.3	2,675	23.9	2,740	52,700	105%
Vihtavuori N530	19.1	2,470	19.6	2,525	20.1	2,580	20.7	2,645	21.2	2,695	52,700	105%
Hodgdon CFE BLK	17.6	2,455	18.1	2,510	18.6	2,570	19.1	2,625	19.6	2,680	54,900	93%
Alliant AR-Comp	19.1	2,450	19.6	2,505	20.1	2,555	20.7	2,620	21.2	2,675	54,700	104%
Hodgdon H4895	19.5	2,440	20.1	2,505	20.6	2,555	21.1	2,610	21.7	2,675	54,900	103%
Reload Swiss RS40	18.7	2,430	19.2	2,485	19.8	2,550	20.3	2,605	20.8	2,660	54,800	102%
Alliant Power Pro 1200-R	18.0	2,425	18.5	2,480	19.0	2,535	19.5	2,590	20.0	2,645	54,600	94%
Shooters World AR Plus	18.8	2,410	19.3	2,465	19.9	2,530	20.4	2,585	20.9	2,640	54,500	97%
Accurate 2460	19.5	2,405	20.1	2,465	20.6	2,520	21.1	2,570	21.7	2,630	54,600	100%
Hodgdon H335	19.4	2,380	19.9	2,435	20.5	2,495	21.1	2,560	21.6	2,615	54,900	98%
Hodgdon Varget	19.7	2,375	20.3	2,440	20.8	2,490	21.3	2,545	21.9	2,610	52,200	105%
Accurate 2230	19.2	2,390	19.7	2,440	20.3	2,505	20.8	2,555	21.3	2,605	54,700	99%
IMR 4320	20.3	2,365	20.9	2,430	21.4	2,485	21.9	2,540	22.5	2,605	54,700	104%
IMR 8208 XBR	18.9	2,380	19.4	2,435	19.9	2,485	20.5	2,550	21.0	2,605	52,300	105%
Hodgdon Benchmark	18.6	2,375	19.1	2,430	19.6	2,485	20.2	2,545	20.7	2,600	52,600	105%
Alliant Power Pro Varmint	19.4	2,360	19.9	2,415	20.5	2,480	21.1	2,540	21.6	2,595	51,900	105%
Shooters World Tactical Rifle	19.0	2,365	19.5	2,420	20.1	2,485	20.6	2,540	21.1	2,595	54,300	100%
Accurate 2015	18.4	2,365	18.9	2,420	19.4	2,475	19.9	2,530	20.4	2,585	54,900	97%
Ramshot X-Terminator	18.8	2,365	19.3	2,415	19.9	2,475	20.4	2,530	20.9	2,580	54,500	97%
Shooters World The Patriot	18.5	2,355	19.0	2,405	19.6	2,470	20.1	2,525	20.6	2,575	54,400	98%

24 Nosler

Nosler introduced the 22 Nosler in 2017 and developed the 24 Nosler shortly afterward. The new cartridge was added to the SAAMI standards at the beginning of 2018. Nosler engineering staff designed it. It is based on the 22 Nosler case shortened by 0.160 inch and necked up to accept .243-inch bullets. Like its parent it has a rim rebated to the .223 Remington bolt-face size. A maximum overall length of 2.260 inches allows it to function from AR-15-size magazines.

With a 1:8-inch twist the 24 Nosler handles bullets from 55-grain varmint designs to 105-grain match bullets. Published velocities from a 24-inch test barrel range from about 3,400 fps with 55-grain bullets to about 2,600 fps with 105-grain bullets. Early rifles included the Nosler Model 48 bolt action and AR-15-pattern rifles. The cartridge is used for varmint and predator hunting, deer-sized game and target shooting. It gives AR-15 shooters a 6mm option without moving to a larger AR-10-size rifle.

Cartridge specifications	
Bullet Diameter	**0.243" (6.17 mm)**
Max Case Length	**1.600" (40.64 mm)**
Case Trim Length	**1.590" (40.39 mm)**
Max COAL	**2.260" (57.40 mm)**
Primer Pocket	**Small Rifle**
Standard Twist	**1:8"**
Case Capacity	**31.0 gr H_2O**
Max Pressure	**55,000 psi (SAAMI)**

70 gr Bullet · 25" barrel

COAL: 2.100" • Bullet length: 0.872" • Seat depth: 0.371" • Usable capacity: 27.1 / 31.0 gr H_2O

Powder	STEP 1 · 90%		STEP 2		STEP 3		STEP 4		STEP 5 · LIMIT			
	gr	fps	gr	fps	gr	fps	gr	fps	gr	fps	psi	Fill
Hodgdon CFE BLK	22.9	3,010	23.5	3,075	24.1	3,135	24.8	3,210	25.4	3,275	54,600	97%
Accurate 2230	25.2	2,910	25.9	2,975	26.6	3,045	27.3	3,110	28.0	3,180	54,100	105%
Alliant Power Pro 1200-R	23.4	2,915	24.0	2,975	24.7	3,045	25.4	3,120	26.0	3,180	54,700	98%
Shooters World SBR-SOCOM	19.4	2,935	19.9	2,995	20.4	3,050	21.0	3,120	21.5	3,180	54,900	82%
Accurate 2460	25.5	2,905	26.2	2,970	26.9	3,040	27.6	3,105	28.3	3,175	53,500	105%
Norma 200	22.9	2,910	23.5	2,975	24.1	3,035	24.8	3,110	25.4	3,175	54,500	102%
Reload Swiss RS40	23.9	2,890	24.6	2,965	25.3	3,035	25.9	3,095	26.6	3,170	54,500	104%
Ramshot X-Terminator	24.8	2,885	25.5	2,955	26.2	3,020	26.9	3,090	27.6	3,155	54,800	103%
Shooters World AR Plus	24.0	2,885	24.7	2,955	25.4	3,025	26.0	3,085	26.7	3,155	54,500	100%
Vihtavuori N130	22.2	2,885	22.8	2,950	23.4	3,010	24.1	3,085	24.7	3,145	53,400	105%
Shooters World The Patriot	24.1	2,850	24.8	2,920	25.5	2,990	26.1	3,050	26.8	3,120	54,600	103%
Hodgdon H4895	24.7	2,835	25.4	2,905	26.0	2,965	26.7	3,035	27.4	3,105	52,500	105%
Hodgdon H335	24.9	2,825	25.6	2,895	26.3	2,960	27.0	3,030	27.7	3,100	54,900	101%
Accurate 2015	23.4	2,815	24.0	2,875	24.7	2,945	25.4	3,015	26.0	3,080	54,800	100%
Accurate 2495	24.9	2,790	25.6	2,860	26.3	2,930	27.0	3,005	27.7	3,075	54,700	103%
Accurate LT-32	22.6	2,810	23.2	2,875	23.9	2,945	24.5	3,005	25.1	3,070	54,500	102%
IMR 3031	23.7	2,795	24.4	2,865	25.0	2,925	25.6	2,990	26.3	3,060	54,900	104%
Shooters World Tactical Rifle	24.5	2,790	25.2	2,860	25.9	2,930	26.5	2,990	27.2	3,060	54,800	103%
Hodgdon H322	23.0	2,780	23.6	2,840	24.3	2,910	24.9	2,970	25.5	3,035	54,700	100%
IMR 4198	20.6	2,785	21.2	2,850	21.8	2,915	22.3	2,965	22.9	3,030	54,900	102%

80 gr Bullet · 25" barrel

COAL: 2.185" • Bullet length: 1.035" • Seat depth: 0.450" • Usable capacity: 25.9 / 31.0 gr H_2O

Powder	STEP 1 · 90%		STEP 2		STEP 3		STEP 4		STEP 5 · LIMIT			
	gr	fps	gr	fps	gr	fps	gr	fps	gr	fps	psi	Fill
Hodgdon CFE BLK	21.5	2,755	22.1	2,815	22.7	2,875	23.3	2,940	23.9	3,000	54,400	95%
Accurate 2460	24.0	2,685	24.7	2,755	25.4	2,820	26.0	2,875	26.7	2,945	54,800	103%
Alliant Power Pro 1200-R	22.1	2,705	22.7	2,765	23.3	2,825	23.9	2,885	24.5	2,945	55,000	96%
Reload Swiss RS40	22.7	2,690	23.3	2,750	23.9	2,810	24.6	2,880	25.2	2,940	54,900	103%
Norma 200	21.4	2,685	22.0	2,745	22.6	2,810	23.2	2,870	23.8	2,930	54,600	100%
Shooters World AR Plus	22.8	2,680	23.4	2,740	24.1	2,810	24.7	2,865	25.3	2,925	54,800	99%
Accurate 2230	23.6	2,675	24.3	2,740	24.9	2,800	25.6	2,865	26.2	2,920	54,500	102%
Hodgdon H4895	23.6	2,665	24.3	2,735	24.9	2,795	25.6	2,860	26.2	2,920	54,300	105%
Vihtavuori N130	21.1	2,685	21.7	2,745	22.3	2,805	22.8	2,860	23.4	2,920	54,700	104%
Ramshot X-Terminator	23.2	2,655	23.9	2,720	24.5	2,775	25.1	2,835	25.8	2,900	55,000	101%
Accurate 2200	21.5	2,635	22.1	2,695	22.7	2,760	23.3	2,820	23.9	2,880	53,400	105%
Hodgdon H335	23.6	2,630	24.3	2,700	24.9	2,755	25.6	2,825	26.2	2,880	54,900	100%
Shooters World The Patriot	22.8	2,640	23.4	2,695	24.1	2,765	24.7	2,825	25.3	2,880	55,000	101%
Accurate 2495	23.6	2,615	24.3	2,680	24.9	2,740	25.6	2,810	26.2	2,870	54,700	102%
Shooters World Tactical Rifle	23.1	2,595	23.8	2,665	24.4	2,725	25.1	2,790	25.7	2,850	54,700	102%
Accurate LT-32	21.3	2,595	21.9	2,655	22.5	2,715	23.1	2,775	23.7	2,840	54,500	101%
IMR 3031	22.3	2,590	22.9	2,650	23.6	2,720	24.2	2,780	24.8	2,840	54,800	102%
IMR 4895	23.7	2,590	24.4	2,655	25.0	2,710	25.6	2,770	26.3	2,840	52,300	105%
IMR 4320	24.3	2,555	25.0	2,625	25.6	2,685	26.3	2,750	27.0	2,820	54,100	105%
Hodgdon H322	21.7	2,570	22.3	2,630	22.9	2,690	23.5	2,750	24.1	2,815	54,800	99%

85 gr Bullet · 25" barrel

COAL: 2.100" • Bullet length: 0.942" • Seat depth: 0.442" • Usable capacity: 26.1 / 31.0 gr H_2O

Powder	STEP 1 · 90%		STEP 2		STEP 3		STEP 4		STEP 5 · LIMIT			
	gr	fps	gr	fps	gr	fps	gr	fps	gr	fps	psi	Fill
Hodgdon Leverevolution	25.7	2,675	26.4	2,740	27.1	2,805	27.9	2,880	28.6	2,945	53,300	105%
Hodgdon CFE BLK	21.2	2,670	21.8	2,730	22.4	2,790	23.0	2,850	23.6	2,910	54,500	93%
Alliant AR-Comp	23.0	2,650	23.6	2,705	24.3	2,775	24.9	2,830	25.5	2,890	53,600	105%
Hodgdon H4895	23.4	2,615	24.0	2,670	24.7	2,740	25.4	2,805	26.0	2,865	54,800	103%
Reload Swiss RS40	22.4	2,620	23.0	2,680	23.6	2,740	24.3	2,805	24.9	2,865	54,600	102%
Accurate 2460	23.7	2,620	24.4	2,685	25.0	2,740	25.6	2,795	26.3	2,860	54,900	101%
Alliant Power Pro 1200-R	21.7	2,625	22.3	2,685	22.9	2,740	23.5	2,800	24.1	2,860	54,600	94%
Shooters World AR Plus	22.5	2,610	23.1	2,665	23.8	2,735	24.4	2,790	25.0	2,850	54,600	97%
Accurate 2230	23.2	2,600	23.9	2,665	24.5	2,720	25.1	2,775	25.8	2,840	55,000	100%
Vihtavuori N130	20.7	2,600	21.3	2,660	21.9	2,720	22.4	2,770	23.0	2,830	54,500	101%
IMR 4895	23.8	2,575	24.4	2,630	25.1	2,695	25.8	2,760	26.4	2,820	54,400	105%
Hodgdon H335	23.3	2,570	23.9	2,625	24.6	2,690	25.3	2,755	25.9	2,815	54,600	98%
Ramshot X-Terminator	22.8	2,575	23.4	2,630	24.1	2,695	24.7	2,750	25.3	2,810	54,700	98%
Hodgdon Benchmark	22.3	2,555	22.9	2,610	23.6	2,680	24.2	2,735	24.8	2,795	52,900	105%
Shooters World Tactical Rifle	23.0	2,555	23.6	2,615	24.3	2,680	24.9	2,740	25.5	2,795	55,000	101%
Shooters World The Patriot	22.4	2,560	23.0	2,615	23.6	2,675	24.3	2,740	24.9	2,795	54,500	99%
IMR 4320	24.2	2,525	24.9	2,590	25.5	2,650	26.2	2,715	26.9	2,785	54,700	104%
IMR 3031	22.1	2,540	22.7	2,600	23.3	2,660	23.9	2,715	24.5	2,775	54,600	100%
Alliant Reloder 7	19.9	2,535	20.4	2,585	21.0	2,645	21.6	2,705	22.1	2,755	54,600	90%
Hodgdon H322	21.4	2,505	22.0	2,565	22.6	2,625	23.2	2,680	23.8	2,740	54,500	97%

90 gr Bullet · 25" barrel

COAL: 2.170" • Bullet length: 1.160" • Seat depth: 0.590" • Usable capacity: 24.6 / 31.0 gr H_2O

Powder	STEP 1 · 90%		STEP 2		STEP 3		STEP 4		STEP 5 · LIMIT			
	gr	fps	gr	fps	gr	fps	gr	fps	gr	fps	psi	Fill
Hodgdon Leverevolution	24.2	2,530	24.9	2,595	25.5	2,650	26.2	2,720	26.9	2,785	51,700	105%
Hodgdon CFE BLK	20.3	2,555	20.9	2,615	21.4	2,665	21.9	2,715	22.5	2,780	55,000	94%
Reload Swiss RS40	21.3	2,495	21.9	2,555	22.5	2,615	23.1	2,675	23.7	2,735	54,900	103%
Alliant AR-Comp	21.6	2,500	22.2	2,555	22.8	2,615	23.4	2,670	24.0	2,730	52,400	105%
Alliant Power Pro 1200-R	20.6	2,495	21.2	2,555	21.8	2,615	22.3	2,670	22.9	2,730	54,800	95%
Hodgdon H4895	22.2	2,490	22.8	2,545	23.4	2,605	24.1	2,675	24.7	2,730	54,900	104%
Accurate 2460	22.4	2,485	23.0	2,540	23.6	2,595	24.3	2,665	24.9	2,720	54,600	102%
Shooters World AR Plus	21.4	2,480	22.0	2,540	22.6	2,600	23.2	2,660	23.8	2,720	54,900	98%
Accurate 2230	22.1	2,480	22.7	2,535	23.3	2,590	23.9	2,645	24.5	2,705	55,000	101%
Accurate 2495	22.2	2,445	22.8	2,500	23.4	2,560	24.1	2,630	24.7	2,690	55,000	101%
Hodgdon H335	22.1	2,440	22.7	2,500	23.4	2,565	24.0	2,620	24.6	2,680	54,500	99%
IMR 4895	22.4	2,435	23.0	2,490	23.6	2,550	24.3	2,615	24.9	2,670	53,500	105%
Ramshot X-Terminator	21.6	2,445	22.2	2,500	22.8	2,560	23.4	2,615	24.0	2,670	54,700	99%
Shooters World The Patriot	21.3	2,435	21.9	2,495	22.5	2,550	23.1	2,610	23.7	2,670	55,000	100%
Shooters World Tactical Rifle	21.8	2,430	22.4	2,490	23.0	2,550	23.6	2,605	24.2	2,665	54,900	101%
IMR 4320	23.0	2,405	23.6	2,465	24.3	2,530	24.9	2,590	25.5	2,650	54,400	105%
Accurate 2015	20.8	2,415	21.4	2,475	22.0	2,535	22.5	2,585	23.1	2,645	54,600	98%
Hodgdon Benchmark	21.0	2,415	21.6	2,475	22.1	2,520	22.7	2,580	23.3	2,640	51,700	105%
IMR 3031	20.9	2,410	21.5	2,470	22.0	2,520	22.6	2,580	23.2	2,640	54,400	101%
Hodgdon H322	20.3	2,380	20.9	2,440	21.5	2,500	22.0	2,550	22.6	2,610	54,600	98%

105 gr Bullet · 25" barrel

COAL: 2.250" • Bullet length: 1.249" • Seat depth: 0.599" • Usable capacity: 24.4 / 31.0 gr H_2O

Powder	STEP 1 · 90%		STEP 2		STEP 3		STEP 4		STEP 5 · LIMIT			
	gr	fps	gr	fps	gr	fps	gr	fps	gr	fps	psi	Fill
Hodgdon Leverevolution	23.8	2,420	24.4	2,470	25.1	2,535	25.8	2,600	26.4	2,655	54,400	103%
Vihtavuori N530	21.0	2,380	21.6	2,435	22.1	2,480	22.7	2,535	23.3	2,590	54,900	102%
Vihtavuori N140	22.6	2,330	23.2	2,385	23.9	2,450	24.5	2,505	25.1	2,560	53,600	105%
Hodgdon Varget	22.1	2,320	22.7	2,380	23.4	2,440	24.0	2,500	24.6	2,555	53,800	105%
Shooters World Match Rifle	22.3	2,315	22.9	2,370	23.6	2,435	24.2	2,490	24.8	2,545	54,500	105%
Vihtavuori N135	21.2	2,325	21.8	2,380	22.4	2,435	23.0	2,485	23.6	2,540	54,500	105%
Winchester 748	22.4	2,310	23.0	2,365	23.6	2,420	24.3	2,480	24.9	2,535	52,100	105%
Alliant AR-Comp	20.8	2,315	21.4	2,370	22.0	2,425	22.5	2,475	23.1	2,530	54,800	101%
Hodgdon H4895	21.2	2,310	21.8	2,365	22.4	2,420	23.0	2,475	23.6	2,530	54,700	100%
Alliant Power Pro Varmint	21.7	2,295	22.3	2,350	22.9	2,405	23.5	2,460	24.1	2,515	54,600	104%
IMR 8208 XBR	21.0	2,300	21.6	2,355	22.1	2,400	22.7	2,455	23.3	2,515	54,900	104%
IMR 4895	21.6	2,290	22.2	2,345	22.8	2,400	23.4	2,455	24.0	2,510	54,700	102%
Shooters World AR Plus	20.5	2,295	21.1	2,350	21.6	2,395	22.2	2,450	22.8	2,510	54,700	95%
Accurate 2460	21.2	2,280	21.8	2,330	22.4	2,385	23.0	2,440	23.6	2,495	55,000	97%
Hodgdon H335	21.3	2,275	21.9	2,330	22.5	2,385	23.1	2,440	23.7	2,495	55,000	96%
IMR 4064	21.4	2,265	22.0	2,320	22.6	2,375	23.2	2,430	23.8	2,480	54,700	104%
Hodgdon Benchmark	20.3	2,265	20.9	2,320	21.5	2,375	22.0	2,420	22.6	2,475	54,800	102%
Vihtavuori N133	20.0	2,265	20.6	2,320	21.1	2,365	21.6	2,415	22.2	2,470	54,400	104%
Accurate 2230	20.7	2,250	21.3	2,305	21.9	2,355	22.4	2,400	23.0	2,455	54,800	95%
Shooters World The Patriot	20.3	2,240	20.9	2,295	21.4	2,340	21.9	2,385	22.5	2,440	54,700	96%

.240 Weatherby Magnum

Roy Weatherby introduced the .240 Weatherby Magnum in 1968 for the Weatherby Mark V rifle. It was the last cartridge he designed. Most Weatherby magnums descend from the .300 H&H Magnum. The .240 instead uses its own belted case. It is essentially the .30-06 Springfield case necked down to 6mm (.243 inch) with a belt added and Weatherby's double-radius shoulder. Because of these unique dimensions the brass cannot be formed from other cases.

Weatherby's factory loads drive a 72-grain bullet at about 3,700 fps and a 100-grain bullet at about 3,275 fps. This makes it one of the fastest commercially loaded 6mm cartridges. It serves as a long-range varmint cartridge. It is also used for deer, pronghorn and other light to medium game. The .240 has never been widely popular. It performs best in barrels of 24 inches or longer. Rifles and ammunition remain available and come chiefly from Weatherby.

Cartridge specifications	
Bullet Diameter	**0.243" (6.17 mm)**
Max Case Length	**2.500" (63.50 mm)**
Case Trim Length	**2.490" (63.25 mm)**
Max COAL	**3.100" (78.74 mm)**
Primer Pocket	**Large Rifle**
Standard Twist	**1:10"**
Case Capacity	**63.1 gr H_2O**
Max Pressure	**4,400 bar / 63,817 psi (C.I.P.)**

58 gr Bullet · 25" barrel

COAL: 3.020" • Bullet length: 0.763" • Seat depth: 0.243" • Usable capacity: 60.3 / 63.0 gr H_2O

Powder	STEP 1 · 90%		STEP 2		STEP 3		STEP 4		STEP 5 · LIMIT			
	gr	fps	gr	fps	gr	fps	gr	fps	gr	fps	psi	Fill
Hodgdon Leverevolution	47.6	3,790	48.9	3,875	50.3	3,965	51.6	4,050	52.9	4,135	63,700	84%
Winchester StaBALL 6.5	52.0	3,730	53.5	3,820	54.9	3,910	56.3	3,995	57.8	4,090	63,700	97%
Accurate 4350	52.1	3,690	53.5	3,780	55.0	3,880	56.5	3,975	57.9	4,070	63,600	100%
Hodgdon BL-C(2)	47.0	3,730	48.3	3,815	49.6	3,900	50.9	3,985	52.2	4,070	63,700	87%
Reload Swiss RS52	46.4	3,735	47.7	3,820	49.0	3,905	50.2	3,985	51.5	4,065	63,600	90%
Hodgdon CFE 223	47.4	3,715	48.7	3,800	50.0	3,880	51.4	3,970	52.7	4,050	63,600	89%
Alliant Reloder 16	50.5	3,695	51.9	3,780	53.3	3,870	54.7	3,955	56.1	4,045	63,700	103%
Hodgdon H380	49.1	3,675	50.5	3,760	51.8	3,840	53.1	3,925	54.5	4,015	63,800	96%
Alliant Reloder 15	45.7	3,690	47.0	3,770	48.3	3,850	49.5	3,930	50.8	4,010	63,600	90%
Hodgdon H4350	50.5	3,630	51.9	3,720	53.3	3,815	54.7	3,905	56.1	4,000	63,700	94%
Hodgdon Varget	45.2	3,675	46.5	3,760	47.7	3,840	49.0	3,925	50.2	4,000	63,800	87%
Accurate 4064	46.1	3,670	47.4	3,755	48.7	3,835	49.9	3,910	51.2	3,995	63,700	94%
IMR 4064	45.2	3,680	46.5	3,760	47.7	3,840	49.0	3,920	50.2	3,995	63,800	89%
Norma 204	51.8	3,610	53.3	3,705	54.7	3,800	56.1	3,890	57.6	3,985	63,600	100%
Accurate 2495	44.1	3,655	45.3	3,735	46.5	3,810	47.8	3,895	49.0	3,975	63,500	82%
Hodgdon H414	50.0	3,625	51.4	3,715	52.8	3,800	54.1	3,885	55.5	3,975	63,800	94%
Norma 203B	45.6	3,645	46.9	3,730	48.2	3,815	49.4	3,890	50.7	3,975	63,800	91%
Hodgdon H4895	43.2	3,660	44.4	3,740	45.6	3,815	46.8	3,895	48.0	3,970	63,800	82%
Vihtavuori N160	52.1	3,585	53.5	3,670	55.0	3,765	56.5	3,860	57.9	3,950	63,600	104%
IMR 7828SSC	54.6	3,505	56.1	3,600	57.7	3,700	59.2	3,795	60.7	3,890	63,600	105%

70 gr Bullet · 25" barrel

COAL: 3.060" • Bullet length: 0.868" • Seat depth: 0.308" • Usable capacity: 59.6 / 63.0 gr H_2O

Powder	STEP 1 · 90%		STEP 2		STEP 3		STEP 4		STEP 5 · LIMIT			
	gr	fps	gr	fps	gr	fps	gr	fps	gr	fps	psi	Fill
Alliant Reloder 23	51.6	3,495	53.0	3,580	54.5	3,670	55.9	3,755	57.3	3,840	63,700	104%
Alliant Reloder 26	54.4	3,470	55.9	3,560	57.4	3,650	58.9	3,745	60.4	3,835	63,800	102%
Accurate 4350	50.1	3,490	51.5	3,575	52.9	3,660	54.3	3,745	55.7	3,830	63,600	98%
Winchester StaBALL 6.5	50.0	3,495	51.4	3,575	52.8	3,660	54.1	3,735	55.5	3,820	63,600	94%
Hodgdon Leverevolution	45.4	3,505	46.6	3,580	47.9	3,660	49.1	3,735	50.4	3,815	63,500	81%
Hodgdon SUPERFORMANCE	51.6	3,460	53.0	3,545	54.5	3,635	55.9	3,720	57.3	3,810	63,600	94%
Vihtavuori N560	53.8	3,435	55.3	3,525	56.8	3,610	58.3	3,695	59.8	3,785	60,400	105%
Hodgdon Hybrid 100V	48.2	3,430	49.6	3,520	50.9	3,600	52.3	3,690	53.6	3,775	63,700	101%
Alliant Reloder 16	48.0	3,450	49.3	3,530	50.6	3,605	52.0	3,690	53.3	3,765	63,500	99%
Reload Swiss RS60	48.0	3,430	49.3	3,510	50.6	3,595	52.0	3,680	53.3	3,765	63,800	92%
Ramshot Hunter	50.0	3,425	51.4	3,510	52.8	3,590	54.2	3,675	55.6	3,760	63,600	99%
Hodgdon H4350	48.2	3,430	49.5	3,510	50.9	3,595	52.2	3,675	53.5	3,755	63,500	91%
Alliant Reloder 17	47.0	3,405	48.3	3,490	49.6	3,570	50.9	3,650	52.2	3,735	63,700	88%
Vihtavuori N550	46.2	3,430	47.5	3,505	48.8	3,575	50.0	3,645	51.3	3,720	63,800	90%
Vihtavuori N160	50.0	3,390	51.4	3,470	52.8	3,555	54.1	3,630	55.5	3,715	63,700	101%
IMR 4451	47.9	3,350	49.2	3,430	50.5	3,505	51.9	3,595	53.2	3,675	63,600	93%
Vihtavuori N150	43.3	3,385	44.5	3,460	45.7	3,530	46.9	3,600	48.1	3,675	63,800	91%
Vihtavuori N540	43.0	3,385	44.2	3,455	45.4	3,530	46.6	3,600	47.8	3,670	63,600	85%
Vihtavuori N165	52.4	3,325	53.9	3,410	55.3	3,490	56.8	3,580	58.2	3,660	62,200	105%
Winchester Supreme 780	54.4	3,275	55.9	3,365	57.4	3,455	58.9	3,545	60.4	3,635	63,700	102%

75 gr Bullet · 25" barrel

COAL: 3.062" • Bullet length: 0.911" • Seat depth: 0.350" • Usable capacity: 59.1 / 63.0 gr H_2O

Powder	STEP 1 · 90%		STEP 2		STEP 3		STEP 4		STEP 5 · LIMIT			
	gr	fps	gr	fps	gr	fps	gr	fps	gr	fps	psi	Fill
Alliant Reloder 26	53.5	3,400	55.0	3,485	56.5	3,575	57.9	3,660	59.4	3,750	63,700	101%
Alliant Reloder 23	50.7	3,410	52.1	3,490	53.5	3,575	54.9	3,655	56.3	3,740	63,600	103%
Vihtavuori N560	53.5	3,400	55.0	3,485	56.5	3,570	57.9	3,650	59.4	3,735	63,200	105%
Hodgdon SUPERFORMANCE	50.8	3,385	52.2	3,470	53.6	3,550	55.0	3,635	56.4	3,720	63,800	93%
Winchester StaBALL 6.5	49.1	3,400	50.5	3,480	51.8	3,555	53.1	3,630	54.5	3,710	63,700	93%
Hodgdon Hybrid 100V	47.5	3,355	48.8	3,435	50.1	3,515	51.5	3,605	52.8	3,685	63,800	100%
Alliant Reloder 22	51.2	3,330	52.6	3,415	54.0	3,495	55.5	3,590	56.9	3,675	63,800	102%
Vihtavuori N555	49.5	3,345	50.9	3,425	52.3	3,510	53.6	3,590	55.0	3,675	63,800	100%
Norma 204	49.3	3,340	50.7	3,425	52.0	3,505	53.4	3,585	54.8	3,670	63,700	97%
Ramshot Hunter	49.2	3,345	50.6	3,425	52.0	3,505	53.3	3,580	54.7	3,665	63,700	98%
IMR 4350	48.0	3,345	49.3	3,420	50.6	3,500	52.0	3,580	53.3	3,660	63,700	97%
IMR 4831	49.1	3,315	50.5	3,400	51.8	3,480	53.1	3,560	54.5	3,645	63,500	99%
Norma MRP	50.9	3,305	52.3	3,385	53.8	3,475	55.2	3,555	56.6	3,640	63,700	100%
Alliant Reloder 19	50.2	3,295	51.6	3,380	53.0	3,465	54.4	3,550	55.8	3,635	63,600	100%
Hodgdon H4831SC	50.7	3,305	52.1	3,385	53.5	3,470	54.9	3,550	56.3	3,635	63,800	96%
Accurate MagPro	54.5	3,255	56.0	3,345	57.5	3,435	59.1	3,530	60.6	3,620	63,600	105%
Winchester 760	47.2	3,315	48.5	3,390	49.8	3,465	51.1	3,545	52.4	3,620	63,700	91%
Vihtavuori N160	49.0	3,300	50.4	3,380	51.7	3,455	53.0	3,535	54.4	3,615	63,700	100%
IMR 4064	41.9	3,295	43.0	3,360	44.2	3,430	45.4	3,500	46.5	3,565	63,700	84%
Accurate 3100	50.3	3,220	51.7	3,305	53.1	3,385	54.5	3,470	55.9	3,555	63,600	103%

80 gr Bullet · 25" barrel

COAL: 3.060" • Bullet length: 0.954" • Seat depth: 0.394" • Usable capacity: 58.6 / 63.0 gr H_2O

Powder	STEP 1 · 90%		STEP 2		STEP 3		STEP 4		STEP 5 · LIMIT			
	gr	fps	gr	fps	gr	fps	gr	fps	gr	fps	psi	Fill
Alliant Reloder 26	52.6	3,325	54.0	3,405	55.5	3,495	57.0	3,585	58.4	3,670	63,800	100%
Alliant Reloder 23	49.8	3,325	51.2	3,405	52.5	3,480	53.9	3,565	55.3	3,645	63,700	102%
Vihtavuori N560	52.4	3,315	53.9	3,400	55.3	3,475	56.8	3,560	58.2	3,640	63,700	104%
Accurate 4350	48.3	3,315	49.6	3,395	51.0	3,475	52.4	3,555	53.7	3,635	63,700	96%
Hodgdon SUPERFORMANCE	49.9	3,305	51.3	3,385	52.6	3,465	54.0	3,545	55.4	3,630	63,800	92%
Winchester StaBALL 6.5	48.1	3,300	49.4	3,375	50.8	3,455	52.1	3,530	53.4	3,605	63,700	92%
Hodgdon Hybrid 100V	46.7	3,275	48.0	3,355	49.3	3,430	50.6	3,510	51.9	3,595	63,700	99%
Reload Swiss RS76	54.9	3,230	56.4	3,310	58.0	3,400	59.5	3,485	61.0	3,575	63,600	105%
IMR 4831	48.3	3,240	49.6	3,320	51.0	3,405	52.4	3,490	53.7	3,570	63,800	98%
Ramshot Hunter	48.3	3,255	49.6	3,330	51.0	3,410	52.4	3,495	53.7	3,570	63,700	97%
Alliant Reloder 19	49.4	3,230	50.8	3,310	52.1	3,390	53.5	3,475	54.9	3,560	63,700	99%
Ramshot Grand	54.4	3,215	55.9	3,300	57.4	3,385	58.9	3,475	60.4	3,560	62,200	105%
Hodgdon H4350	46.2	3,255	47.5	3,330	48.8	3,405	50.0	3,480	51.3	3,555	63,600	88%
IMR 4350	46.9	3,250	48.2	3,325	49.5	3,400	50.8	3,480	52.1	3,555	63,500	95%
IMR 7828SSC	50.6	3,225	52.0	3,305	53.4	3,390	54.8	3,470	56.2	3,555	63,700	100%
Alliant Reloder 16	45.9	3,255	47.2	3,330	48.5	3,405	49.7	3,470	51.0	3,545	63,700	96%
Alliant Reloder 17	45.4	3,240	46.6	3,315	47.9	3,395	49.1	3,465	50.4	3,545	63,600	86%
Vihtavuori N160	47.9	3,210	49.2	3,280	50.5	3,355	51.9	3,435	53.2	3,510	63,500	98%
Vihtavuori N165	50.8	3,195	52.2	3,270	53.6	3,350	55.0	3,425	56.4	3,505	63,700	103%
Vihtavuori N170	53.2	3,160	54.7	3,240	56.2	3,315	57.6	3,390	59.1	3,470	60,600	105%

85 gr Bullet · 25" barrel

COAL: 3.060" • Bullet length: 0.961" • Seat depth: 0.401" • Usable capacity: 58.6 / 63.0 gr H_2O

Powder	STEP 1 · 90%		STEP 2		STEP 3		STEP 4		STEP 5 · LIMIT			
	gr	fps	gr	fps	gr	fps	gr	fps	gr	fps	psi	Fill
Alliant Reloder 26	51.9	3,260	53.4	3,345	54.8	3,425	56.3	3,510	57.7	3,595	63,600	99%
Alliant Reloder 23	49.1	3,250	50.5	3,325	51.9	3,405	53.2	3,480	54.6	3,560	63,700	101%
Accurate 4350	47.7	3,245	49.0	3,320	50.4	3,400	51.7	3,475	53.0	3,550	63,700	95%
Hodgdon SUPERFORMANCE	49.2	3,230	50.6	3,310	52.0	3,390	53.3	3,465	54.7	3,550	63,700	91%
Vihtavuori N560	51.5	3,235	52.9	3,310	54.4	3,395	55.8	3,470	57.2	3,545	63,800	102%
Ramshot Grand	54.3	3,180	55.8	3,265	57.3	3,350	58.8	3,435	60.3	3,525	63,500	105%
Hodgdon Hybrid 100V	46.3	3,210	47.6	3,290	48.8	3,360	50.1	3,440	51.4	3,520	63,700	98%
Alliant Reloder 22	49.7	3,200	51.1	3,280	52.5	3,360	53.8	3,435	55.2	3,515	63,700	100%
Winchester StaBALL 6.5	47.4	3,215	48.7	3,285	50.0	3,360	51.4	3,440	52.7	3,510	63,800	91%
Reload Swiss RS76	54.4	3,175	55.9	3,255	57.4	3,335	58.9	3,420	60.4	3,505	63,600	104%
IMR 4831	47.8	3,180	49.1	3,255	50.5	3,340	51.8	3,415	53.1	3,495	63,600	97%
Alliant Reloder 19	48.9	3,175	50.3	3,255	51.6	3,330	52.9	3,405	54.3	3,490	63,700	98%
Ramshot Hunter	47.7	3,185	49.0	3,255	50.4	3,335	51.7	3,410	53.0	3,485	63,500	96%
Hodgdon H4831SC	49.2	3,160	50.6	3,240	52.0	3,320	53.3	3,395	54.7	3,475	63,800	94%
Ramshot Magnum	54.5	3,130	56.0	3,215	57.5	3,295	59.1	3,385	60.6	3,475	63,700	104%
Alliant Reloder 17	44.8	3,165	46.0	3,235	47.3	3,315	48.5	3,385	49.8	3,465	63,600	85%
IMR 4350	46.2	3,175	47.5	3,250	48.8	3,325	50.0	3,390	51.3	3,465	63,500	94%
Winchester 760	45.6	3,145	46.9	3,215	48.2	3,290	49.4	3,360	50.7	3,435	63,700	89%
Vihtavuori N160	47.3	3,140	48.6	3,210	49.9	3,280	51.2	3,355	52.5	3,425	63,800	97%
Shooters World SW4350	47.7	3,095	49.0	3,170	50.4	3,245	51.7	3,320	53.0	3,395	63,600	98%

90 gr Bullet · 25" barrel

COAL: 3.062" • Bullet length: 1.023" • Seat depth: 0.461" • Usable capacity: 57.9 / 63.0 gr H_2O

Powder	STEP 1 · 90%		STEP 2		STEP 3		STEP 4		STEP 5 · LIMIT			
	gr	fps	gr	fps	gr	fps	gr	fps	gr	fps	psi	Fill
Alliant Reloder 26	50.9	3,190	52.3	3,265	53.8	3,350	55.2	3,430	56.6	3,510	63,500	98%
Alliant Reloder 23	48.2	3,175	49.5	3,245	50.9	3,325	52.2	3,395	53.5	3,470	63,500	100%
Hodgdon SUPERFORMANCE	48.3	3,160	49.6	3,230	51.0	3,310	52.4	3,390	53.7	3,465	63,800	91%
Ramshot Grand	53.5	3,125	55.0	3,210	56.5	3,295	57.9	3,370	59.4	3,460	63,800	105%
Accurate 4350	46.7	3,160	48.0	3,235	49.3	3,310	50.6	3,380	51.9	3,455	63,500	94%
Vihtavuori N560	50.3	3,155	51.7	3,230	53.1	3,300	54.5	3,380	55.9	3,455	63,800	101%
Alliant Reloder 22	48.8	3,130	50.1	3,205	51.5	3,285	52.9	3,365	54.2	3,440	63,800	99%
Reload Swiss RS62	47.3	3,125	48.6	3,200	50.0	3,280	51.3	3,355	52.6	3,435	63,600	95%
Vihtavuori N565	52.0	3,110	53.5	3,190	54.9	3,270	56.3	3,350	57.8	3,435	63,500	105%
Alliant Reloder 19	48.0	3,110	49.3	3,180	50.6	3,255	52.0	3,340	53.3	3,415	63,600	98%
Norma MRP	48.5	3,095	49.9	3,175	51.2	3,245	52.5	3,320	53.9	3,400	63,800	97%
Vihtavuori N555	46.2	3,105	47.5	3,180	48.8	3,255	50.0	3,320	51.3	3,395	63,600	95%
Hodgdon H4831SC	48.2	3,085	49.6	3,165	50.9	3,235	52.3	3,315	53.6	3,390	63,600	93%
Alliant Power Pro 4000-MR	47.2	3,095	48.5	3,165	49.8	3,235	51.1	3,310	52.4	3,385	63,700	92%
IMR 4350	45.2	3,095	46.5	3,170	47.7	3,235	49.0	3,310	50.2	3,375	63,500	93%
Vihtavuori N170	52.1	3,055	53.5	3,125	55.0	3,200	56.5	3,280	57.9	3,350	63,500	104%
Winchester 760	44.7	3,065	46.0	3,140	47.2	3,205	48.5	3,280	49.7	3,345	63,700	88%
Vihtavuori N165	49.0	3,050	50.4	3,125	51.7	3,195	53.0	3,265	54.4	3,340	63,800	101%
Alliant Reloder 25	50.0	3,025	51.4	3,100	52.8	3,180	54.2	3,255	55.6	3,335	60,600	105%
Vihtavuori N160	46.2	3,055	47.5	3,125	48.8	3,195	50.0	3,260	51.3	3,335	63,600	96%

95 gr Bullet · 25" barrel

COAL: 3.060" • Bullet length: 1.129" • Seat depth: 0.569" • Usable capacity: 56.9 / 63.0 gr H_2O

Powder	STEP 1 · 90%		STEP 2		STEP 3		STEP 4		STEP 5 · LIMIT			
	gr	fps	gr	fps	gr	fps	gr	fps	gr	fps	psi	Fill
Alliant Reloder 26	50.0	3,130	51.4	3,205	52.8	3,285	54.1	3,360	55.5	3,440	63,700	98%
Alliant Reloder 23	47.2	3,100	48.5	3,170	49.8	3,245	51.1	3,315	52.4	3,390	63,600	100%
Ramshot Grand	52.5	3,065	54.0	3,145	55.4	3,225	56.8	3,300	58.3	3,390	63,700	104%
Hodgdon SUPERFORMANCE	47.3	3,085	48.6	3,160	50.0	3,240	51.3	3,310	52.6	3,385	63,700	90%
Accurate 4350	45.7	3,085	47.0	3,160	48.3	3,230	49.5	3,300	50.8	3,375	63,500	93%
Vihtavuori N570	52.2	3,045	53.7	3,130	55.1	3,210	56.5	3,290	58.0	3,375	62,300	105%
Vihtavuori N565	50.9	3,055	52.3	3,130	53.8	3,215	55.2	3,295	56.6	3,370	63,700	104%
Vihtavuori N560	49.1	3,075	50.5	3,150	51.8	3,220	53.1	3,290	54.5	3,365	63,600	100%
Reload Swiss RS76	52.5	3,045	54.0	3,125	55.4	3,200	56.8	3,275	58.3	3,355	63,800	103%
Alliant Reloder 19	47.1	3,050	48.4	3,120	49.7	3,195	51.0	3,270	52.3	3,345	63,800	98%
Hodgdon H4831SC	47.3	3,025	48.6	3,095	50.0	3,175	51.3	3,245	52.6	3,320	63,800	93%
IMR 7828SSC	47.8	3,025	49.1	3,100	50.5	3,175	51.8	3,250	53.1	3,320	63,700	97%
Ramshot Hunter	45.9	3,040	47.2	3,110	48.5	3,180	49.7	3,250	51.0	3,320	63,800	95%
Norma MRP	47.4	3,025	48.7	3,095	50.0	3,165	51.4	3,245	52.7	3,315	63,600	96%
Winchester Supreme 780	50.0	3,000	51.4	3,075	52.8	3,155	54.2	3,235	55.6	3,315	63,600	98%
Hodgdon H1000	49.5	2,990	50.9	3,065	52.3	3,145	53.6	3,215	55.0	3,295	60,600	105%
Hodgdon H4350	43.5	3,025	44.7	3,090	45.9	3,160	47.1	3,225	48.3	3,295	63,800	86%
Hodgdon H4831	47.3	3,000	48.6	3,075	49.9	3,145	51.2	3,220	52.5	3,290	63,600	99%
Alliant Reloder 25	49.2	2,975	50.6	3,050	52.0	3,130	53.3	3,200	54.7	3,280	61,100	105%
IMR 7977	49.5	2,935	50.9	3,010	52.3	3,090	53.6	3,160	55.0	3,240	61,900	105%

100 gr Bullet · 25" barrel

COAL: 3.062" • Bullet length: 1.065" • Seat depth: 0.503" • Usable capacity: 57.4 / 63.0 gr H_2O

Powder	STEP 1 · 90%		STEP 2		STEP 3		STEP 4		STEP 5 · LIMIT			
	gr	fps	gr	fps	gr	fps	gr	fps	gr	fps	psi	Fill
Alliant Reloder 26	49.5	3,060	50.9	3,135	52.3	3,210	53.6	3,280	55.0	3,360	63,600	96%
Vihtavuori N570	52.0	3,020	53.5	3,100	54.9	3,175	56.3	3,255	57.8	3,340	63,600	104%
Ramshot Grand	52.2	3,005	53.7	3,085	55.1	3,160	56.5	3,240	58.0	3,320	63,600	103%
Hodgdon Retumbo	51.8	3,000	53.3	3,080	54.7	3,155	56.1	3,230	57.6	3,310	63,500	104%
Alliant Reloder 23	46.7	3,020	48.0	3,090	49.3	3,160	50.6	3,235	51.9	3,305	63,800	98%
Accurate MagPro	51.2	2,985	52.6	3,060	54.0	3,135	55.5	3,220	56.9	3,295	63,600	101%
Hodgdon SUPERFORMANCE	46.8	3,010	48.1	3,085	49.4	3,155	50.7	3,225	52.0	3,295	63,500	89%
Ramshot Magnum	52.3	2,970	53.8	3,050	55.2	3,125	56.6	3,200	58.1	3,280	63,600	102%
Alliant Reloder 19	46.7	2,985	48.0	3,055	49.3	3,125	50.6	3,200	51.9	3,275	63,700	96%
Hodgdon H1000	50.0	2,975	51.4	3,050	52.8	3,125	54.1	3,200	55.5	3,275	63,300	105%
Vihtavuori N560	48.2	2,985	49.6	3,060	50.9	3,125	52.3	3,195	53.6	3,265	63,700	98%
Alliant Reloder 25	49.7	2,960	51.1	3,035	52.5	3,110	53.8	3,185	55.2	3,260	63,600	105%
IMR 7828SSC	47.3	2,960	48.6	3,030	49.9	3,100	51.2	3,170	52.5	3,240	63,600	95%
Hodgdon H4831SC	46.9	2,955	48.2	3,025	49.5	3,095	50.8	3,165	52.1	3,235	63,700	91%
Vihtavuori N568	51.5	2,905	52.9	2,985	54.4	3,070	55.8	3,150	57.2	3,230	63,800	103%
Vihtavuori N555	44.2	2,950	45.4	3,015	46.7	3,085	47.9	3,155	49.1	3,220	63,800	92%
IMR 4350	43.7	2,945	44.9	3,010	46.1	3,075	47.3	3,140	48.5	3,205	63,700	91%
Hodgdon H4350	42.8	2,935	44.0	3,000	45.2	3,065	46.4	3,135	47.6	3,200	63,500	84%
Alliant Reloder 16	42.5	2,920	43.7	2,980	44.9	3,045	46.0	3,105	47.2	3,170	63,800	91%
Vihtavuori N165	47.2	2,895	48.5	2,965	49.8	3,030	51.1	3,100	52.4	3,165	63,500	98%

105 gr Bullet · 25" barrel

COAL: 3.100" • Bullet length: 1.230" • Seat depth: 0.630" • Usable capacity: 56.1 / 63.0 gr H_2O

Powder	STEP 1 · 90%		STEP 2		STEP 3		STEP 4		STEP 5 · LIMIT			
	gr	fps	gr	fps	gr	fps	gr	fps	gr	fps	psi	Fill
Alliant Reloder 26	48.3	2,990	49.6	3,060	51.0	3,135	52.4	3,215	53.7	3,285	63,600	96%
Vihtavuori N570	50.9	2,970	52.3	3,045	53.7	3,120	55.1	3,200	56.5	3,275	63,600	104%
Ramshot Grand	51.1	2,945	52.5	3,020	54.0	3,100	55.4	3,180	56.8	3,255	63,800	103%
Hodgdon Retumbo	50.8	2,945	52.2	3,020	53.6	3,095	55.0	3,170	56.4	3,245	63,700	104%
Accurate MagPro	50.1	2,925	51.5	3,000	52.9	3,080	54.3	3,155	55.7	3,235	63,700	101%
Hodgdon SUPERFORMANCE	45.8	2,950	47.1	3,020	48.3	3,085	49.6	3,155	50.9	3,230	63,800	89%
Alliant Reloder 23	45.5	2,945	46.8	3,015	48.0	3,080	49.3	3,150	50.6	3,225	63,500	98%
Ramshot Magnum	51.2	2,915	52.6	2,990	54.0	3,065	55.5	3,145	56.9	3,220	63,800	102%
Vihtavuori N565	48.8	2,930	50.1	3,000	51.5	3,075	52.9	3,150	54.2	3,220	63,800	101%
Accurate 4350	44.2	2,940	45.4	3,005	46.7	3,075	47.9	3,140	49.1	3,210	63,800	91%
Hodgdon H1000	48.9	2,920	50.3	2,990	51.6	3,060	52.9	3,135	54.3	3,210	63,500	105%
Reload Swiss RS70	46.4	2,925	47.7	2,995	49.0	3,065	50.3	3,135	51.6	3,210	63,800	93%
Alliant Reloder 25	48.6	2,900	50.0	2,975	51.3	3,045	52.6	3,120	54.0	3,195	63,700	105%
Vihtavuori N560	47.1	2,920	48.4	2,990	49.7	3,055	51.0	3,120	52.3	3,190	63,800	97%
IMR 7828SSC	46.1	2,895	47.4	2,960	48.7	3,030	49.9	3,095	51.2	3,170	63,600	95%
Hodgdon H4831SC	45.8	2,890	47.1	2,960	48.3	3,025	49.6	3,095	50.9	3,165	63,600	91%
Norma MRP	45.9	2,890	47.2	2,960	48.5	3,030	49.7	3,095	51.0	3,165	63,700	94%
Alliant Power Pro 4000-MR	44.7	2,880	46.0	2,950	47.2	3,015	48.5	3,085	49.7	3,150	63,700	90%
IMR 7977	48.6	2,850	50.0	2,925	51.3	2,995	52.6	3,065	54.0	3,140	63,700	104%
Vihtavuori N170	49.1	2,840	50.5	2,905	51.8	2,970	53.1	3,035	54.5	3,105	63,700	101%

.243 Winchester

Winchester introduced the .243 Winchester in 1955 for its Model 70 bolt-action and Model 88 lever-action rifles. The cartridge grew out of wildcat work by Field & Stream gun editor Warren Page. Page had experimented with .243-caliber designs since the 1940s. After the .308 Winchester appeared in 1952 he began necking down its case. His hunting results and articles drew attention to the idea. Winchester soon developed a factory version on the same necked-down .308 Winchester case.

Winchester's original factory loads paired an 80-grain bullet for varmints with a 100-grain bullet for deer and pronghorn. This established the dual-purpose role the cartridge still fills. Its flat trajectory and light recoil have made it one of the most popular deer cartridges in North America. It is also used for varmint hunting, metallic silhouette and target shooting. In the United Kingdom and several U.S. states it is among the smallest calibers legal for deer. Rifles of every common action type and factory ammunition are widely available.

Cartridge specifications	
Bullet Diameter	**0.243" (6.17 mm)**
Max Case Length	**2.045" (51.94 mm)**
Case Trim Length	**2.035" (51.69 mm)**
Max COAL	**2.710" (68.83 mm)**
Primer Pocket	**Large Rifle**
Standard Twist	**1:10"**
Case Capacity	**54.1 gr H_2O**
Max Pressure	**60,000 psi (SAAMI)**

55 gr Bullet · 25" barrel

COAL: 2.540" • Bullet length: 0.849" • Seat depth: 0.353" • Usable capacity: 50.6 / 54.1 gr H_2O

Powder	STEP 1 · 90%		STEP 2		STEP 3		STEP 4		STEP 5 · LIMIT			
	gr	fps	gr	fps	gr	fps	gr	fps	gr	fps	psi	Fill
Hodgdon Leverevolution	41.8	3,740	42.9	3,820	44.1	3,910	45.3	4,000	46.4	4,080	60,000	88%
Vihtavuori N550	44.6	3,720	45.9	3,815	47.1	3,900	48.4	3,990	49.6	4,075	59,700	103%
Vihtavuori N540	40.8	3,700	41.9	3,775	43.0	3,855	44.2	3,940	45.3	4,020	59,700	95%
Vihtavuori N150	41.1	3,660	42.3	3,750	43.4	3,830	44.6	3,915	45.7	4,000	59,700	101%
IMR 4166	39.5	3,665	40.6	3,745	41.7	3,830	42.8	3,910	43.9	3,995	59,800	96%
IMR 4895	39.7	3,660	40.8	3,740	41.9	3,825	43.0	3,905	44.1	3,985	59,700	90%
Alliant Reloder 15	40.5	3,645	41.6	3,725	42.8	3,810	43.9	3,890	45.0	3,975	59,900	95%
Winchester StaBALL 6.5	45.5	3,600	46.8	3,695	48.0	3,780	49.3	3,875	50.6	3,970	59,800	101%
Reload Swiss RS52	40.0	3,615	41.1	3,695	42.2	3,780	43.3	3,860	44.4	3,945	59,700	92%
Ramshot Big Game	43.0	3,575	44.2	3,660	45.4	3,745	46.6	3,835	47.8	3,920	59,700	96%
Hodgdon Benchmark	36.6	3,570	37.6	3,645	38.7	3,725	39.7	3,800	40.7	3,875	59,800	89%
Hodgdon Varget	38.8	3,545	39.9	3,630	41.0	3,710	42.0	3,785	43.1	3,870	60,000	88%
Norma 203B	39.6	3,540	40.7	3,625	41.8	3,705	42.9	3,785	44.0	3,870	59,800	94%
Shooters World The Creed	40.3	3,540	41.4	3,620	42.5	3,700	43.7	3,790	44.8	3,870	60,000	92%
Hodgdon H414	43.7	3,510	44.9	3,595	46.1	3,680	47.3	3,770	48.5	3,855	59,900	98%
Winchester 760	43.7	3,510	44.9	3,595	46.1	3,680	47.3	3,770	48.5	3,855	59,900	98%
Hodgdon H322	35.6	3,555	36.6	3,630	37.5	3,700	38.5	3,775	39.5	3,850	59,700	83%
Alliant Reloder 16	43.1	3,480	44.3	3,570	45.5	3,655	46.7	3,745	47.9	3,830	56,700	105%
Ramshot Hunter	45.0	3,475	46.3	3,565	47.5	3,650	48.8	3,745	50.0	3,830	57,300	105%
Hodgdon H380	41.7	3,475	42.9	3,565	44.0	3,645	45.1	3,725	46.3	3,815	59,800	97%

58 gr Bullet · 25" barrel

COAL: 2.534" • Bullet length: 0.732" • Seat depth: 0.243" • Usable capacity: 51.4 / 54.1 gr H_2O

Powder	STEP 1 · 90%		STEP 2		STEP 3		STEP 4		STEP 5 · LIMIT			
	gr	fps	gr	fps	gr	fps	gr	fps	gr	fps	psi	Fill
Hodgdon Leverevolution	41.6	3,660	42.8	3,750	43.9	3,830	45.1	3,915	46.2	3,995	59,900	86%
Vihtavuori N540	40.4	3,610	41.5	3,685	42.6	3,760	43.8	3,845	44.9	3,920	60,000	93%
Winchester StaBALL 6.5	45.5	3,560	46.8	3,650	48.0	3,735	49.3	3,825	50.6	3,920	60,000	99%
IMR 4166	39.4	3,595	40.5	3,675	41.6	3,755	42.7	3,835	43.8	3,915	59,900	95%
Vihtavuori N150	40.9	3,595	42.0	3,670	43.1	3,750	44.3	3,835	45.4	3,915	59,700	99%
IMR 4895	39.4	3,580	40.5	3,660	41.6	3,740	42.7	3,820	43.8	3,900	59,800	88%
Alliant Reloder 15	40.1	3,565	41.2	3,645	42.4	3,730	43.5	3,805	44.6	3,885	59,900	93%
IMR 4064	39.8	3,570	40.9	3,650	42.0	3,730	43.1	3,805	44.2	3,885	59,900	92%
Winchester 748	40.1	3,565	41.2	3,645	42.3	3,725	43.4	3,805	44.5	3,885	59,900	89%
IMR 3031	37.2	3,550	38.2	3,625	39.3	3,705	40.3	3,780	41.3	3,850	60,000	86%
Norma 202	38.4	3,540	39.5	3,620	40.5	3,690	41.6	3,765	42.7	3,845	59,900	90%
Accurate 2700	43.6	3,495	44.8	3,575	46.0	3,660	47.2	3,745	48.4	3,830	59,800	96%
Hodgdon H4895	37.4	3,520	38.5	3,605	39.5	3,675	40.5	3,750	41.6	3,830	60,000	84%
IMR 4320	39.5	3,505	40.6	3,585	41.7	3,670	42.8	3,750	43.9	3,830	59,700	86%
Alliant Reloder 17	42.9	3,460	44.1	3,545	45.3	3,635	46.5	3,725	47.7	3,815	59,900	93%
Norma 203B	39.4	3,480	40.5	3,560	41.6	3,640	42.7	3,720	43.8	3,800	59,800	93%
Reload Swiss RS60	43.7	3,445	44.9	3,535	46.1	3,620	47.3	3,710	48.5	3,800	59,900	97%
Shooters World The Creed	40.1	3,475	41.2	3,555	42.4	3,640	43.5	3,720	44.6	3,800	59,900	90%
Hodgdon Varget	38.6	3,480	39.7	3,560	40.8	3,640	41.8	3,715	42.9	3,795	59,900	87%
Hodgdon H380	41.6	3,430	42.8	3,515	43.9	3,590	45.1	3,675	46.2	3,755	60,000	96%

70 gr Bullet · 25" barrel

COAL: 2.580" • Bullet length: 0.850" • Seat depth: 0.315" • Usable capacity: 50.5 / 54.1 gr H_2O

Powder	STEP 1 · 90%		STEP 2		STEP 3		STEP 4		STEP 5 · LIMIT			
	gr	fps	gr	fps	gr	fps	gr	fps	gr	fps	psi	Fill
Hodgdon Leverevolution	39.6	3,385	40.7	3,465	41.8	3,540	42.9	3,620	44.0	3,695	59,900	83%
Winchester StaBALL 6.5	43.7	3,350	44.9	3,430	46.1	3,510	47.3	3,590	48.5	3,670	60,000	97%
Vihtavuori N550	41.4	3,365	42.5	3,435	43.7	3,515	44.9	3,590	46.0	3,665	59,800	96%
Hodgdon SUPERFORMANCE	45.2	3,290	46.5	3,380	47.7	3,460	49.0	3,550	50.2	3,635	59,700	97%
Ramshot Hunter	43.9	3,290	45.1	3,370	46.3	3,450	47.6	3,535	48.8	3,620	59,800	103%
IMR 4166	37.6	3,325	38.6	3,395	39.7	3,470	40.8	3,550	41.8	3,615	59,900	92%
Vihtavuori N150	38.6	3,320	39.7	3,395	40.8	3,470	41.8	3,540	42.9	3,615	60,000	95%
Reload Swiss RS60	41.9	3,270	43.1	3,350	44.3	3,435	45.4	3,515	46.6	3,600	59,900	95%
Accurate 2700	41.9	3,285	43.0	3,360	44.2	3,440	45.4	3,520	46.5	3,595	60,000	94%
IMR 4350	42.6	3,265	43.8	3,345	45.0	3,430	46.1	3,505	47.3	3,585	59,900	101%
Alliant Power Pro 4000-MR	44.0	3,250	45.2	3,330	46.5	3,415	47.7	3,495	48.9	3,580	59,800	99%
IMR 4895	37.1	3,290	38.1	3,360	39.2	3,435	40.2	3,505	41.2	3,575	59,700	84%
Alliant Reloder 15	37.7	3,285	38.8	3,360	39.8	3,425	40.9	3,500	41.9	3,570	59,700	89%
Vihtavuori N555	44.5	3,235	45.7	3,315	47.0	3,405	48.2	3,490	49.4	3,570	59,900	105%
Alliant Power Pro 2000-MR	39.5	3,260	40.6	3,330	41.7	3,405	42.8	3,480	43.9	3,555	59,900	91%
Hodgdon H4350	41.3	3,220	42.4	3,295	43.6	3,380	44.8	3,460	45.9	3,540	59,700	92%
Alliant Reloder 19	44.4	3,185	45.6	3,265	46.8	3,345	48.1	3,435	49.3	3,515	60,000	104%
Hodgdon Varget	36.6	3,225	37.6	3,295	38.7	3,375	39.7	3,445	40.7	3,515	59,900	84%
IMR 7828SSC	45.5	3,155	46.8	3,240	48.0	3,320	49.3	3,405	50.6	3,495	59,900	104%
IMR 4831	42.5	3,140	43.7	3,225	44.9	3,305	46.0	3,385	47.2	3,470	59,900	100%

75 gr Bullet · 25" barrel

COAL: 2.560" • Bullet length: 0.848" • Seat depth: 0.333" • Usable capacity: 50.3 / 54.1 gr H_2O

Powder	STEP 1 · 90%		STEP 2		STEP 3		STEP 4		STEP 5 · LIMIT			
	gr	fps	gr	fps	gr	fps	gr	fps	gr	fps	psi	Fill
Hodgdon Leverevolution	38.9	3,285	40.0	3,365	41.0	3,430	42.1	3,510	43.2	3,585	59,900	82%
Winchester StaBALL 6.5	42.9	3,260	44.1	3,340	45.3	3,415	46.5	3,495	47.7	3,575	59,800	96%
Hodgdon SUPERFORMANCE	44.6	3,230	45.9	3,315	47.1	3,395	48.4	3,485	49.6	3,565	60,000	97%
Alliant Reloder 23	43.7	3,220	44.9	3,300	46.2	3,385	47.4	3,465	48.6	3,545	58,300	105%
Alliant Reloder 26	46.4	3,205	47.7	3,290	49.0	3,375	50.2	3,455	51.5	3,545	59,900	103%
Vihtavuori N550	40.4	3,260	41.5	3,325	42.6	3,395	43.8	3,475	44.9	3,545	59,800	94%
Reload Swiss RS62	43.8	3,200	45.0	3,280	46.3	3,370	47.5	3,450	48.7	3,535	59,700	101%
Accurate 4350	42.3	3,205	43.5	3,285	44.6	3,360	45.8	3,440	47.0	3,520	59,800	98%
Reload Swiss RS70	45.2	3,180	46.5	3,265	47.7	3,345	49.0	3,435	50.2	3,515	60,000	101%
Alliant Power Pro 4000-MR	43.4	3,180	44.6	3,260	45.8	3,340	47.0	3,415	48.2	3,500	59,700	98%
Winchester 760	41.1	3,175	42.3	3,255	43.4	3,325	44.6	3,405	45.7	3,480	59,700	93%
IMR 4064	36.7	3,195	37.7	3,265	38.8	3,335	39.8	3,405	40.8	3,470	59,800	87%
IMR 4320	37.3	3,180	38.3	3,250	39.3	3,320	40.4	3,395	41.4	3,465	59,900	83%
Hodgdon H4350	40.6	3,155	41.7	3,230	42.9	3,310	44.0	3,385	45.1	3,460	59,900	90%
Alliant Power Pro 2000-MR	38.8	3,170	39.9	3,240	41.0	3,315	42.0	3,380	43.1	3,455	59,700	90%
Alliant Reloder 15	36.9	3,185	37.9	3,250	39.0	3,325	40.0	3,390	41.0	3,455	59,800	87%
Accurate 4064	37.3	3,175	38.3	3,240	39.3	3,310	40.4	3,380	41.4	3,450	60,000	91%
Norma MRP	44.1	3,125	45.3	3,200	46.5	3,280	47.8	3,365	49.0	3,445	59,900	101%
Hodgdon H4831SC	43.8	3,115	45.0	3,190	46.3	3,275	47.5	3,355	48.7	3,435	59,900	97%
Vihtavuori N140	36.2	3,125	37.2	3,190	38.2	3,255	39.2	3,325	40.2	3,390	59,800	81%

80 gr Bullet · 25" barrel

COAL: 2.610" • Bullet length: 0.973" • Seat depth: 0.408" • Usable capacity: 49.5 / 54.1 gr H_2O

Powder	STEP 1 · 90%		STEP 2		STEP 3		STEP 4		STEP 5 · LIMIT			
	gr	fps	gr	fps	gr	fps	gr	fps	gr	fps	psi	Fill
Hodgdon SUPERFORMANCE	43.6	3,150	44.8	3,230	46.0	3,310	47.2	3,390	48.4	3,470	59,800	96%
Alliant Reloder 23	43.0	3,155	44.2	3,230	45.4	3,310	46.6	3,385	47.8	3,465	59,400	105%
Winchester StaBALL 6.5	41.9	3,165	43.0	3,235	44.2	3,310	45.4	3,390	46.5	3,460	59,700	95%
Alliant Reloder 26	45.3	3,125	46.5	3,205	47.8	3,290	49.0	3,365	50.3	3,455	59,700	102%
Hodgdon Leverevolution	37.8	3,170	38.8	3,235	39.9	3,310	41.0	3,385	42.0	3,455	59,700	81%
Reload Swiss RS62	42.9	3,130	44.1	3,210	45.3	3,290	46.5	3,370	47.7	3,450	60,000	100%
Ramshot Hunter	42.3	3,130	43.5	3,205	44.6	3,280	45.8	3,355	47.0	3,435	59,800	101%
Vihtavuori N550	39.2	3,145	40.3	3,215	41.4	3,285	42.4	3,345	43.5	3,415	59,900	92%
Hodgdon Hybrid 100V	40.2	3,095	41.3	3,170	42.5	3,255	43.6	3,330	44.7	3,405	59,700	101%
Alliant Power Pro 4000-MR	42.4	3,095	43.6	3,170	44.8	3,250	45.9	3,320	47.1	3,400	59,700	97%
Accurate 2700	40.2	3,100	41.3	3,175	42.5	3,250	43.6	3,325	44.7	3,395	59,900	92%
Winchester 760	40.1	3,080	41.2	3,150	42.4	3,230	43.5	3,300	44.6	3,375	59,800	93%
Vihtavuori N150	36.6	3,100	37.6	3,165	38.7	3,240	39.7	3,305	40.7	3,370	60,000	92%
Alliant Reloder 16	39.3	3,085	40.4	3,155	41.5	3,225	42.6	3,295	43.7	3,365	59,800	98%
Hodgdon H4350	39.4	3,060	40.5	3,130	41.6	3,205	42.7	3,280	43.8	3,350	59,800	89%
Hodgdon H4831SC	42.8	3,035	44.0	3,110	45.1	3,185	46.3	3,260	47.5	3,340	59,700	97%
IMR 4451	40.1	3,040	41.2	3,115	42.3	3,185	43.4	3,260	44.5	3,335	59,700	94%
Hodgdon H4831	43.2	3,015	44.4	3,095	45.6	3,175	46.8	3,255	48.0	3,330	59,800	104%
IMR 4895	35.2	3,070	36.2	3,135	37.2	3,205	38.1	3,265	39.1	3,330	59,900	82%
Hodgdon Varget	34.8	3,015	35.8	3,085	36.8	3,155	37.7	3,215	38.7	3,280	59,700	81%

85 gr Bullet · 25" barrel

COAL: 2.600" • Bullet length: 0.945" • Seat depth: 0.390" • Usable capacity: 49.7 / 54.1 gr H_2O

Powder	STEP 1 · 90%		STEP 2		STEP 3		STEP 4		STEP 5 · LIMIT			
	gr	fps	gr	fps	gr	fps	gr	fps	gr	fps	psi	Fill
Hodgdon SUPERFORMANCE	43.3	3,100	44.5	3,175	45.7	3,255	46.9	3,330	48.1	3,410	60,000	95%
Alliant Reloder 23	42.8	3,105	44.0	3,180	45.1	3,250	46.3	3,325	47.5	3,405	59,700	104%
Alliant Reloder 26	45.0	3,085	46.3	3,165	47.5	3,240	48.8	3,325	50.0	3,400	59,900	101%
Reload Swiss RS62	42.6	3,080	43.8	3,160	45.0	3,235	46.1	3,310	47.3	3,390	59,700	99%
Winchester StaBALL 6.5	41.5	3,095	42.6	3,165	43.8	3,240	45.0	3,315	46.1	3,385	59,800	93%
Vihtavuori N560	44.9	3,080	46.1	3,150	47.4	3,230	48.6	3,300	49.9	3,380	57,300	105%
Reload Swiss RS70	43.8	3,055	45.0	3,130	46.3	3,215	47.5	3,290	48.7	3,370	59,800	99%
Ramshot Hunter	41.9	3,065	43.1	3,140	44.3	3,220	45.4	3,290	46.6	3,365	59,700	99%
IMR 4955	42.7	3,050	43.9	3,130	45.0	3,200	46.2	3,280	47.4	3,360	59,900	96%
Accurate 2700	39.9	3,040	41.0	3,110	42.1	3,180	43.2	3,250	44.3	3,320	59,900	91%
Hodgdon H414	39.8	3,025	40.9	3,095	42.0	3,165	43.1	3,235	44.2	3,305	59,900	91%
IMR 7828SSC	43.3	2,990	44.5	3,065	45.7	3,145	46.9	3,220	48.1	3,300	59,800	101%
Norma MRP	42.8	3,000	44.0	3,075	45.1	3,145	46.3	3,220	47.5	3,300	60,000	99%
Winchester 760	39.8	3,020	40.9	3,090	42.0	3,160	43.1	3,230	44.2	3,300	59,800	91%
Hodgdon H4350	39.0	3,000	40.1	3,075	41.1	3,140	42.2	3,210	43.3	3,280	59,900	88%
Alliant Reloder 22	42.3	2,975	43.5	3,050	44.6	3,120	45.8	3,195	47.0	3,275	59,800	100%
IMR 4320	36.0	3,000	37.0	3,065	38.0	3,135	39.0	3,200	40.0	3,265	59,900	81%
IMR 4831	40.7	2,965	41.8	3,035	43.0	3,115	44.1	3,190	45.2	3,260	59,700	98%
IMR 4064	35.1	2,995	36.1	3,065	37.0	3,120	38.0	3,185	39.0	3,250	59,800	84%
Alliant Reloder 15	35.2	2,980	36.2	3,045	37.2	3,110	38.1	3,170	39.1	3,235	59,700	84%

90 gr Bullet · 25" barrel

COAL: 2.625" • Bullet length: 1.065" • Seat depth: 0.484" • Usable capacity: 48.7 / 54.1 gr H_2O

Powder	STEP 1 · 90%		STEP 2		STEP 3		STEP 4		STEP 5 · LIMIT			
	gr	fps	gr	fps	gr	fps	gr	fps	gr	fps	psi	Fill
Hodgdon SUPERFORMANCE	42.3	3,030	43.5	3,105	44.6	3,175	45.8	3,250	47.0	3,330	60,000	94%
Alliant Reloder 26	43.9	3,015	45.1	3,090	46.3	3,165	47.6	3,245	48.8	3,325	59,700	101%
Alliant Reloder 23	41.8	3,030	42.9	3,100	44.1	3,175	45.3	3,250	46.4	3,320	59,800	103%
Reload Swiss RS62	41.7	3,015	42.9	3,095	44.0	3,165	45.1	3,235	46.3	3,315	60,000	99%
Vihtavuori N560	44.0	3,020	45.2	3,090	46.5	3,165	47.7	3,240	48.9	3,315	58,200	105%
Reload Swiss RS70	42.8	2,990	44.0	3,065	45.2	3,140	46.4	3,220	47.6	3,295	59,900	99%
Winchester StaBALL 6.5	40.5	3,015	41.6	3,080	42.8	3,155	43.9	3,225	45.0	3,295	59,800	93%
Ramshot Hunter	41.0	2,995	42.1	3,065	43.3	3,140	44.4	3,210	45.5	3,280	59,700	99%
Vihtavuori N555	40.9	2,990	42.0	3,060	43.1	3,130	44.3	3,205	45.4	3,280	59,900	100%
Accurate 4350	40.0	2,990	41.1	3,060	42.2	3,130	43.3	3,200	44.4	3,270	59,900	95%
Alliant Reloder 19	41.5	2,945	42.6	3,015	43.8	3,090	45.0	3,170	46.1	3,245	59,800	101%
Vihtavuori N160	40.6	2,955	41.7	3,025	42.9	3,095	44.0	3,165	45.1	3,235	59,800	100%
Winchester 760	38.8	2,940	39.9	3,010	41.0	3,080	42.0	3,145	43.1	3,215	59,700	91%
Alliant Reloder 22	41.3	2,910	42.4	2,980	43.6	3,055	44.8	3,130	45.9	3,205	59,800	100%
Alliant Reloder 16	37.7	2,930	38.8	2,995	39.8	3,060	40.9	3,125	41.9	3,190	59,800	95%
Hodgdon H4350	37.9	2,920	39.0	2,995	40.0	3,055	41.0	3,120	42.1	3,190	59,800	87%
IMR 4831	39.8	2,900	40.9	2,975	42.0	3,045	43.1	3,115	44.2	3,190	59,800	97%
IMR 7828	42.3	2,870	43.5	2,945	44.6	3,015	45.8	3,090	47.0	3,165	59,800	97%
IMR 4064	34.1	2,905	35.0	2,965	36.0	3,030	37.0	3,095	37.9	3,150	59,800	83%
Alliant Reloder 15	34.2	2,890	35.2	2,955	36.1	3,015	37.0	3,070	38.0	3,135	59,800	83%

95 gr Bullet · 25" barrel

COAL: 2.630" • Bullet length: 1.129" • Seat depth: 0.544" • Usable capacity: 48.0 / 54.1 gr H_2O

Powder	STEP 1 · 90%		STEP 2		STEP 3		STEP 4		STEP 5 · LIMIT			
	gr	fps	gr	fps	gr	fps	gr	fps	gr	fps	psi	Fill
Alliant Reloder 26	43.1	2,955	44.3	3,025	45.5	3,100	46.7	3,175	47.9	3,255	59,900	100%
Vihtavuori N560	43.4	2,970	44.6	3,040	45.8	3,110	47.0	3,185	48.2	3,255	59,800	105%
Hodgdon SUPERFORMANCE	41.4	2,955	42.5	3,025	43.7	3,100	44.9	3,175	46.0	3,245	59,800	94%
Alliant Reloder 23	41.0	2,960	42.1	3,030	43.3	3,105	44.4	3,170	45.5	3,240	59,900	103%
Reload Swiss RS62	40.8	2,945	41.9	3,015	43.0	3,085	44.2	3,160	45.3	3,235	59,700	98%
Reload Swiss RS70	41.9	2,920	43.1	2,995	44.3	3,070	45.4	3,140	46.6	3,220	59,700	98%
IMR 4955	40.9	2,920	42.0	2,990	43.1	3,060	44.3	3,135	45.4	3,205	60,000	95%
Ramshot Hunter	40.1	2,920	41.2	2,985	42.4	3,060	43.5	3,130	44.6	3,200	59,800	99%
Hodgdon Hybrid 100V	38.3	2,905	39.4	2,975	40.5	3,050	41.5	3,115	42.6	3,190	59,800	99%
Alliant Reloder 19	40.7	2,885	41.8	2,955	43.0	3,030	44.1	3,100	45.2	3,170	59,800	100%
IMR 7828SSC	41.3	2,865	42.4	2,930	43.6	3,005	44.8	3,080	45.9	3,150	59,900	99%
Reload Swiss RS76	45.0	2,850	46.3	2,930	47.5	3,000	48.8	3,075	50.0	3,150	59,400	105%
Vihtavuori N160	39.7	2,880	40.8	2,945	41.9	3,015	43.0	3,080	44.1	3,150	59,900	100%
Hodgdon H4831SC	40.7	2,855	41.8	2,925	43.0	3,000	44.1	3,065	45.2	3,135	59,900	95%
Winchester 760	38.0	2,865	39.0	2,930	40.1	3,000	41.2	3,065	42.2	3,130	59,800	90%
IMR 4831	39.0	2,835	40.1	2,905	41.1	2,970	42.2	3,045	43.3	3,115	59,600	97%
Hodgdon H4350	37.0	2,845	38.0	2,910	39.0	2,975	40.1	3,045	41.1	3,105	59,800	86%
Winchester Supreme 780	43.1	2,810	44.3	2,880	45.5	2,955	46.7	3,030	47.9	3,105	60,000	100%
Alliant Reloder 16	36.8	2,845	37.8	2,910	38.8	2,970	39.9	3,035	40.9	3,100	59,900	94%
IMR 4064	33.3	2,820	34.2	2,875	35.1	2,935	36.1	3,000	37.0	3,055	60,000	82%

100 gr Bullet · 25" barrel

COAL: 2.620" • Bullet length: 1.065" • Seat depth: 0.490" • Usable capacity: 48.6 / 54.1 gr H_2O

Powder	STEP 1 · 90%		STEP 2		STEP 3		STEP 4		STEP 5 · LIMIT			
	gr	fps	gr	fps	gr	fps	gr	fps	gr	fps	psi	Fill
Alliant Reloder 26	42.9	2,905	44.1	2,975	45.3	3,050	46.5	3,125	47.7	3,200	60,000	99%
Hodgdon SUPERFORMANCE	41.2	2,905	42.4	2,980	43.5	3,045	44.6	3,110	45.8	3,185	59,900	92%
Reload Swiss RS62	40.7	2,900	41.8	2,965	43.0	3,040	44.1	3,110	45.2	3,180	60,000	97%
Alliant Reloder 23	40.7	2,900	41.8	2,965	43.0	3,035	44.1	3,105	45.2	3,170	59,800	101%
Vihtavuori N560	42.8	2,900	44.0	2,965	45.1	3,030	46.3	3,100	47.5	3,170	59,800	102%
Reload Swiss RS70	41.8	2,880	42.9	2,945	44.1	3,020	45.3	3,095	46.4	3,160	59,700	96%
IMR 4955	40.7	2,870	41.8	2,935	43.0	3,010	44.1	3,080	45.2	3,150	59,900	94%
Hodgdon Hybrid 100V	38.3	2,860	39.3	2,925	40.4	2,995	41.5	3,065	42.5	3,130	59,900	98%
Ramshot Grand	45.0	2,825	46.3	2,905	47.5	2,975	48.8	3,055	50.0	3,130	59,400	105%
Winchester StaBALL 6.5	39.3	2,865	40.4	2,930	41.5	2,995	42.6	3,060	43.7	3,125	60,000	91%
Alliant Reloder 19	40.5	2,835	41.6	2,905	42.8	2,980	43.9	3,050	45.0	3,115	59,700	98%
IMR 7828SSC	41.0	2,815	42.1	2,880	43.3	2,950	44.4	3,020	45.5	3,085	59,700	97%
Alliant Reloder 22	40.2	2,800	41.3	2,865	42.5	2,940	43.6	3,005	44.7	3,075	59,700	98%
Vihtavuori N160	39.3	2,810	40.4	2,875	41.5	2,940	42.6	3,010	43.7	3,075	59,900	98%
IMR 4831	38.9	2,790	40.0	2,860	41.0	2,925	42.1	2,995	43.2	3,065	59,800	95%
Winchester Supreme 780	42.9	2,775	44.1	2,845	45.3	2,915	46.5	2,990	47.7	3,065	60,000	99%
Vihtavuori N170	44.1	2,790	45.3	2,855	46.5	2,925	47.8	2,995	49.0	3,060	59,900	105%
Winchester 760	37.7	2,800	38.8	2,870	39.8	2,930	40.9	2,995	41.9	3,060	59,800	89%
Hodgdon H4350	36.6	2,780	37.6	2,840	38.7	2,910	39.7	2,970	40.7	3,035	59,900	84%
Accurate 3100	40.1	2,750	41.2	2,820	42.4	2,890	43.5	2,960	44.6	3,030	60,000	100%

105 gr Bullet · 25" barrel

COAL: 2.630" • Bullet length: 1.240" • Seat depth: 0.655" • Usable capacity: 47.0 / 54.1 gr H_2O

Powder	STEP 1 · 90%		STEP 2		STEP 3		STEP 4		STEP 5 · LIMIT			
	gr	fps	gr	fps	gr	fps	gr	fps	gr	fps	psi	Fill
Alliant Reloder 26	41.6	2,835	42.8	2,905	43.9	2,975	45.1	3,050	46.2	3,115	59,800	99%
Hodgdon SUPERFORMANCE	40.0	2,835	41.1	2,900	42.2	2,970	43.3	3,035	44.4	3,105	59,800	93%
Reload Swiss RS62	39.4	2,820	40.5	2,890	41.6	2,960	42.7	3,030	43.8	3,100	59,800	97%
Alliant Reloder 23	39.4	2,820	40.5	2,885	41.6	2,955	42.7	3,020	43.8	3,090	59,700	101%
Vihtavuori N560	41.5	2,825	42.6	2,890	43.8	2,955	45.0	3,025	46.1	3,090	60,000	103%
Reload Swiss RS70	40.5	2,805	41.6	2,875	42.8	2,945	43.9	3,015	45.0	3,085	59,700	97%
IMR 4955	39.4	2,795	40.5	2,860	41.6	2,930	42.7	3,000	43.8	3,065	59,800	94%
Hodgdon Hybrid 100V	37.1	2,785	38.1	2,850	39.2	2,920	40.2	2,985	41.2	3,050	59,900	98%
Alliant Reloder 19	39.3	2,770	40.4	2,840	41.5	2,910	42.6	2,975	43.7	3,045	59,900	99%
Winchester StaBALL 6.5	38.2	2,790	39.3	2,855	40.3	2,915	41.4	2,985	42.4	3,045	60,000	91%
Vihtavuori N555	38.0	2,780	39.0	2,845	40.1	2,910	41.2	2,975	42.2	3,040	59,700	96%
Alliant Reloder 22	39.1	2,740	40.2	2,805	41.3	2,875	42.3	2,935	43.4	3,000	59,900	98%
Hodgdon H4831	39.5	2,730	40.6	2,800	41.7	2,865	42.8	2,935	43.9	3,000	60,000	100%
Hodgdon H4831SC	39.2	2,730	40.3	2,795	41.4	2,865	42.5	2,930	43.6	3,000	59,900	93%
Norma MRP	39.3	2,735	40.4	2,800	41.5	2,865	42.6	2,935	43.7	3,000	59,700	97%
IMR 4350	36.7	2,745	37.7	2,805	38.8	2,870	39.8	2,935	40.8	2,995	60,000	93%
IMR 4831	37.7	2,720	38.8	2,790	39.8	2,855	40.9	2,925	41.9	2,990	59,800	96%
Vihtavuori N170	42.7	2,720	43.9	2,785	45.0	2,845	46.2	2,910	47.4	2,980	59,700	105%
Vihtavuori N165	40.1	2,715	41.2	2,775	42.4	2,845	43.5	2,910	44.6	2,975	59,900	102%
Hodgdon H4350	35.5	2,710	36.5	2,770	37.5	2,835	38.4	2,890	39.4	2,955	59,900	85%

115 gr Bullet · 25" barrel

COAL: 2.710" • Bullet length: 1.342" • Seat depth: 0.677" • Usable capacity: 46.7 / 54.1 gr H_2O

Powder	STEP 1 · 90%		STEP 2		STEP 3		STEP 4		STEP 5 · LIMIT			
	gr	fps	gr	fps	gr	fps	gr	fps	gr	fps	psi	Fill
Accurate MagPro	43.2	2,725	44.4	2,795	45.6	2,870	46.8	2,940	48.0	3,015	58,100	105%
Alliant Reloder 26	40.6	2,735	41.7	2,800	42.9	2,870	44.0	2,935	45.1	3,000	60,000	97%
Ramshot Magnum	43.8	2,695	45.0	2,765	46.3	2,840	47.5	2,910	48.7	2,985	59,700	105%
Hodgdon SUPERFORMANCE	39.0	2,725	40.1	2,790	41.1	2,845	42.2	2,915	43.3	2,980	59,900	91%
Reload Swiss RS62	38.5	2,720	39.6	2,785	40.6	2,845	41.7	2,915	42.8	2,980	59,900	95%
Vihtavuori N570	42.8	2,695	44.0	2,765	45.2	2,835	46.4	2,905	47.6	2,975	59,300	105%
Reload Swiss RS70	39.6	2,705	40.7	2,775	41.8	2,840	42.9	2,905	44.0	2,970	60,000	95%
Vihtavuori N565	41.7	2,705	42.9	2,770	44.0	2,835	45.1	2,900	46.3	2,970	60,000	104%
Vihtavuori N560	40.0	2,695	41.1	2,755	42.2	2,815	43.3	2,880	44.4	2,940	59,900	99%
Alliant Reloder 19	38.4	2,675	39.5	2,740	40.5	2,800	41.6	2,870	42.7	2,935	60,000	97%
Hodgdon Retumbo	42.4	2,660	43.6	2,730	44.8	2,795	45.9	2,860	47.1	2,930	58,100	105%
Reload Swiss RS76	42.8	2,655	44.0	2,720	45.1	2,785	46.3	2,850	47.5	2,920	60,000	103%
Hodgdon H1000	40.6	2,635	41.7	2,695	42.9	2,765	44.0	2,830	45.1	2,895	58,200	105%
Winchester StaBALL HD	43.3	2,620	44.5	2,685	45.7	2,755	46.9	2,820	48.1	2,890	59,100	105%
Norma 204	37.3	2,640	38.3	2,700	39.3	2,760	40.4	2,825	41.4	2,885	59,900	93%
Hodgdon H4831	38.4	2,625	39.5	2,690	40.5	2,750	41.6	2,815	42.7	2,880	59,800	98%
Hodgdon H4831SC	38.3	2,630	39.3	2,690	40.4	2,755	41.5	2,820	42.5	2,880	59,800	92%
IMR 4350	35.6	2,620	36.6	2,680	37.5	2,735	38.5	2,795	39.5	2,855	60,000	91%
IMR 4451	35.6	2,595	36.6	2,655	37.6	2,715	38.6	2,775	39.6	2,835	59,600	88%
Hodgdon H4350	34.3	2,585	35.3	2,645	36.2	2,700	37.1	2,755	38.1	2,815	59,900	82%

.243 WSSM

Winchester and Browning introduced the .243 Winchester Super Short Magnum (WSSM) in 2003. It was meant as a compact alternative to the .243 Winchester with higher velocity. Together with the .223 WSSM it launched the Super Short Magnum family. The cases of this family were derived from a shortened .300 Winchester Short Magnum (WSM) case. The short and wide powder column was intended to promote uniform powder burning. Rifles were built on very short actions. SAAMI lists the cartridge as the 243 WSSM.

Winchester factory loads included a 55-grain Ballistic Silvertip at 4,060 fps for varmints. For deer-size game there were a 95-grain Ballistic Silvertip at 3,250 fps and a 100-grain Power-Point at 3,110 fps. All were measured in 24-inch test barrels. The gain over the .243 Winchester is roughly 10 percent or less. The WSSM line never captured a large market share. Winchester and Browning stopped making WSSM rifles after a 2005 court ruling in a patent dispute. Winchester has continued to produce ammunition only intermittently. Handloading is therefore the most dependable way to keep these rifles supplied.

Cartridge specifications	
Bullet Diameter	**0.243" (6.17 mm)**
Max Case Length	**1.670" (42.42 mm)**
Case Trim Length	**1.660" (42.17 mm)**
Max COAL	**2.360" (59.94 mm)**
Primer Pocket	**Large Rifle**
Standard Twist	**1:10"**
Case Capacity	**53.0 gr H_2O**
Max Pressure	**65,000 psi (SAAMI)**

55 gr Bullet · 25" barrel

COAL: 2.230" • Bullet length: 0.849" • Seat depth: 0.289" • Usable capacity: 50.1 / 53.0 gr H_2O

Powder	STEP 1 · 90%		STEP 2		STEP 3		STEP 4		STEP 5 · LIMIT			
	gr	fps	gr	fps	gr	fps	gr	fps	gr	fps	psi	Fill
Hodgdon Leverevolution	43.7	3,870	44.9	3,960	46.2	4,055	47.4	4,145	48.6	4,235	64,900	93%
Vihtavuori N540	42.8	3,830	44.0	3,915	45.2	4,000	46.4	4,085	47.6	4,175	64,800	101%
Accurate 2520	42.0	3,810	43.2	3,900	44.4	3,985	45.5	4,065	46.7	4,150	65,000	96%
IMR 4895	41.7	3,800	42.9	3,885	44.0	3,970	45.1	4,050	46.3	4,140	64,900	96%
Reload Swiss RS52	42.4	3,785	43.6	3,875	44.8	3,965	45.9	4,050	47.1	4,140	64,900	99%
Hodgdon BL-C(2)	42.7	3,770	43.9	3,860	45.0	3,940	46.2	4,030	47.4	4,125	65,000	95%
Winchester 748	42.1	3,765	43.3	3,850	44.5	3,940	45.6	4,025	46.8	4,115	64,700	96%
Alliant AR-Comp	38.8	3,780	39.9	3,860	41.0	3,940	42.0	4,010	43.1	4,095	64,800	92%
Vihtavuori N550	45.0	3,740	46.3	3,830	47.5	3,915	48.8	4,010	50.0	4,095	61,200	105%
IMR 4064	41.7	3,750	42.9	3,840	44.0	3,920	45.1	4,000	46.3	4,090	64,800	99%
Alliant Reloder 15	41.9	3,735	43.1	3,825	44.3	3,910	45.4	3,995	46.6	4,080	64,700	99%
Vihtavuori N150	42.1	3,725	43.3	3,810	44.5	3,900	45.6	3,980	46.8	4,070	63,600	105%
Alliant Power Pro Varmint	40.3	3,720	41.4	3,800	42.5	3,880	43.7	3,970	44.8	4,050	64,900	94%
IMR 4166	40.3	3,715	41.4	3,795	42.5	3,880	43.7	3,970	44.8	4,050	64,800	99%
Hodgdon H380	44.6	3,680	45.8	3,765	47.0	3,855	48.3	3,950	49.5	4,040	62,000	105%
Winchester 760	46.0	3,665	47.3	3,760	48.5	3,850	49.8	3,945	51.1	4,040	63,400	105%
Hodgdon Varget	40.9	3,695	42.0	3,780	43.1	3,860	44.3	3,950	45.4	4,035	64,700	94%
Accurate 4064	41.7	3,685	42.9	3,775	44.0	3,855	45.1	3,940	46.3	4,030	64,800	103%
Ramshot Big Game	44.3	3,660	45.5	3,745	46.8	3,840	48.0	3,925	49.2	4,015	64,800	100%
Vihtavuori N133	37.5	3,705	38.5	3,780	39.6	3,860	40.7	3,940	41.7	4,015	64,800	96%

58 gr Bullet · 25" barrel

COAL: 2.190" • Bullet length: 0.763" • Seat depth: 0.243" • Usable capacity: 50.3 / 53.0 gr H_2O

Powder	STEP 1 · 90%		STEP 2		STEP 3		STEP 4		STEP 5 · LIMIT			
	gr	fps	gr	fps	gr	fps	gr	fps	gr	fps	psi	Fill
Hodgdon Leverevolution	43.4	3,795	44.6	3,880	45.8	3,970	47.0	4,055	48.2	4,145	64,900	92%
Vihtavuori N540	42.2	3,735	43.4	3,815	44.5	3,895	45.7	3,980	46.9	4,065	64,700	99%
Vihtavuori N550	45.2	3,720	46.5	3,805	47.7	3,890	49.0	3,980	50.2	4,065	64,400	105%
Reload Swiss RS52	42.0	3,705	43.2	3,795	44.4	3,885	45.5	3,965	46.7	4,055	64,800	98%
Winchester StaBALL 6.5	47.1	3,675	48.4	3,765	49.7	3,860	51.0	3,955	52.3	4,050	64,600	105%
Accurate 2520	41.5	3,720	42.6	3,795	43.8	3,880	45.0	3,965	46.1	4,045	64,800	94%
IMR 4895	41.1	3,705	42.3	3,790	43.4	3,870	44.6	3,960	45.7	4,040	64,700	94%
Hodgdon H380	44.7	3,650	46.0	3,745	47.2	3,830	48.5	3,925	49.7	4,015	64,100	105%
Hodgdon H4895	39.7	3,690	40.8	3,770	41.9	3,850	43.0	3,930	44.1	4,015	64,700	91%
Hodgdon H414	46.1	3,635	47.4	3,730	48.7	3,825	49.9	3,915	51.2	4,010	64,900	104%
Winchester 760	46.1	3,635	47.4	3,730	48.7	3,825	49.9	3,910	51.2	4,005	64,900	105%
Alliant Reloder 15	41.4	3,655	42.5	3,735	43.7	3,820	44.9	3,905	46.0	3,985	64,700	98%
Alliant TS 15.5	41.5	3,635	42.6	3,715	43.8	3,805	45.0	3,895	46.1	3,980	64,800	99%
Reload Swiss RS50	42.6	3,645	43.8	3,730	45.0	3,815	46.1	3,895	47.3	3,980	64,700	99%
Alliant AR-Comp	38.3	3,675	39.3	3,745	40.4	3,825	41.5	3,905	42.5	3,975	64,700	91%
Hodgdon Varget	40.5	3,620	41.6	3,700	42.8	3,790	43.9	3,870	45.0	3,955	64,700	93%
Accurate 4064	41.3	3,610	42.4	3,690	43.6	3,780	44.8	3,865	45.9	3,950	64,800	101%
Vihtavuori N135	38.5	3,645	39.6	3,725	40.6	3,795	41.7	3,870	42.8	3,950	64,800	92%
Accurate 2200	36.1	3,635	37.1	3,710	38.1	3,785	39.1	3,860	40.1	3,935	64,700	90%
Vihtavuori N133	37.1	3,615	38.1	3,685	39.2	3,765	40.2	3,840	41.2	3,910	64,900	94%

70 gr Bullet · 25" barrel

COAL: 2.250" • Bullet length: 0.872" • Seat depth: 0.292" • Usable capacity: 49.7 / 53.0 gr H_2O

Powder	STEP 1 · 90%		STEP 2		STEP 3		STEP 4		STEP 5 · LIMIT			
	gr	fps	gr	fps	gr	fps	gr	fps	gr	fps	psi	Fill
Hodgdon Leverevolution	41.5	3,520	42.6	3,595	43.8	3,675	45.0	3,760	46.1	3,835	64,800	89%
Winchester StaBALL 6.5	45.5	3,465	46.8	3,555	48.0	3,635	49.3	3,725	50.5	3,805	64,900	102%
Hodgdon H414	44.5	3,435	45.7	3,520	47.0	3,610	48.2	3,690	49.4	3,775	65,000	101%
Hodgdon SUPERFORMANCE	46.9	3,405	48.2	3,495	49.5	3,585	50.8	3,675	52.1	3,770	65,000	103%
Winchester 760	44.5	3,435	45.7	3,515	47.0	3,605	48.2	3,685	49.4	3,770	65,000	102%
Reload Swiss RS52	40.3	3,450	41.4	3,530	42.5	3,605	43.7	3,690	44.8	3,765	64,600	95%
Hodgdon H380	43.0	3,430	44.2	3,510	45.4	3,595	46.6	3,675	47.8	3,760	64,700	102%
Accurate 2700	43.9	3,415	45.1	3,495	46.3	3,580	47.6	3,670	48.8	3,750	64,700	100%
IMR 4895	39.0	3,420	40.1	3,495	41.1	3,565	42.2	3,640	43.3	3,715	64,800	90%
Vihtavuori N540	39.8	3,425	40.9	3,495	42.0	3,570	43.1	3,640	44.2	3,715	64,700	94%
Reload Swiss RS60	43.3	3,365	44.5	3,450	45.7	3,535	46.9	3,620	48.1	3,710	64,900	100%
Vihtavuori N150	39.8	3,400	40.9	3,475	42.0	3,550	43.1	3,625	44.2	3,700	64,900	100%
Vihtavuori N140	39.5	3,395	40.6	3,465	41.7	3,540	42.8	3,615	43.9	3,695	64,600	90%
Ramshot Big Game	42.2	3,365	43.4	3,445	44.5	3,515	45.7	3,595	46.9	3,680	64,900	96%
Alliant Reloder 15	39.2	3,380	40.3	3,455	41.4	3,530	42.4	3,600	43.5	3,675	64,700	93%
Alliant Reloder 17	42.2	3,340	43.4	3,425	44.5	3,505	45.7	3,590	46.9	3,675	65,000	95%
Hodgdon Varget	38.7	3,370	39.8	3,450	40.9	3,525	41.9	3,595	43.0	3,670	64,900	90%
Shooters World The Creed	40.1	3,370	41.2	3,445	42.3	3,520	43.4	3,595	44.5	3,670	64,900	93%
Accurate 4064	39.4	3,360	40.5	3,435	41.6	3,510	42.7	3,585	43.8	3,665	64,900	98%
IMR 4350	43.4	3,315	44.6	3,400	45.8	3,480	47.0	3,565	48.2	3,650	64,700	104%

75 gr Bullet · 25" barrel

COAL: 2.185" • Bullet length: 0.848" • Seat depth: 0.333" • Usable capacity: 49.2 / 53.0 gr H_2O

Powder	STEP 1 · 90%		STEP 2		STEP 3		STEP 4		STEP 5 · LIMIT			
	gr	fps	gr	fps	gr	fps	gr	fps	gr	fps	psi	Fill
Hodgdon Leverevolution	40.6	3,410	41.7	3,485	42.9	3,565	44.0	3,640	45.1	3,715	64,600	88%
Winchester StaBALL 6.5	44.6	3,375	45.9	3,460	47.1	3,540	48.4	3,625	49.6	3,705	65,000	102%
Hodgdon SUPERFORMANCE	46.1	3,335	47.4	3,420	48.7	3,510	49.9	3,590	51.2	3,685	64,800	102%
Hodgdon H414	43.7	3,350	44.9	3,435	46.1	3,515	47.3	3,595	48.5	3,680	64,900	100%
Winchester 760	43.7	3,350	44.9	3,430	46.1	3,510	47.3	3,590	48.5	3,675	64,900	101%
Reload Swiss RS52	39.6	3,355	40.7	3,430	41.8	3,510	42.9	3,585	44.0	3,660	64,900	94%
Hodgdon H4350	43.1	3,325	44.3	3,410	45.5	3,490	46.7	3,570	47.9	3,655	64,700	98%
Vihtavuori N550	41.6	3,335	42.8	3,410	43.9	3,480	45.1	3,560	46.2	3,630	64,900	99%
Vihtavuori N540	38.8	3,305	39.9	3,380	41.0	3,450	42.0	3,515	43.1	3,590	64,800	93%
IMR 4064	38.2	3,295	39.3	3,370	40.3	3,435	41.4	3,510	42.4	3,580	64,900	92%
Ramshot Big Game	41.4	3,270	42.5	3,345	43.7	3,420	44.9	3,500	46.0	3,575	65,000	95%
Reload Swiss RS50	40.1	3,285	41.2	3,355	42.3	3,430	43.4	3,500	44.5	3,575	64,700	95%
Vihtavuori N150	38.8	3,290	39.9	3,360	41.0	3,435	42.0	3,500	43.1	3,575	64,800	98%
IMR 4350	42.6	3,245	43.8	3,325	45.0	3,405	46.1	3,480	47.3	3,565	64,900	103%
Hodgdon Varget	37.8	3,265	38.8	3,335	39.9	3,410	41.0	3,485	42.0	3,555	64,700	89%
Accurate 4064	38.5	3,255	39.6	3,330	40.6	3,400	41.7	3,475	42.8	3,550	64,700	96%
Accurate 4350	41.9	3,180	43.1	3,260	44.3	3,340	45.4	3,415	46.6	3,495	64,700	99%
IMR 4831	42.9	3,155	44.1	3,235	45.3	3,320	46.5	3,405	47.7	3,490	65,000	104%
Vihtavuori N160	42.8	3,160	44.0	3,240	45.2	3,320	46.4	3,395	47.6	3,475	62,900	105%
Alliant Reloder 19	43.6	3,120	44.8	3,200	46.0	3,280	47.2	3,360	48.4	3,445	64,600	104%

80 gr Bullet · 25" barrel

COAL: 2.220" • Bullet length: 0.933" • Seat depth: 0.383" • Usable capacity: 48.7 / 53.0 gr H_2O

Powder	STEP 1 · 90%		STEP 2		STEP 3		STEP 4		STEP 5 · LIMIT			
	gr	fps	gr	fps	gr	fps	gr	fps	gr	fps	psi	Fill
Winchester StaBALL 6.5	43.7	3,280	44.9	3,355	46.2	3,440	47.4	3,520	48.6	3,600	65,000	101%
Hodgdon Leverevolution	39.7	3,300	40.8	3,370	41.9	3,445	43.0	3,520	44.1	3,595	64,700	87%
Hodgdon SUPERFORMANCE	45.2	3,255	46.5	3,340	47.7	3,420	49.0	3,510	50.2	3,590	64,600	101%
Hodgdon H414	42.8	3,260	44.0	3,340	45.1	3,410	46.3	3,490	47.5	3,575	64,700	99%
Winchester 760	42.8	3,255	44.0	3,335	45.1	3,405	46.3	3,485	47.5	3,570	64,700	100%
Hodgdon H4350	42.2	3,245	43.4	3,325	44.5	3,395	45.7	3,480	46.9	3,560	65,000	97%
Accurate 2700	42.3	3,235	43.5	3,315	44.6	3,390	45.8	3,470	47.0	3,550	64,700	98%
Hodgdon H380	41.2	3,235	42.4	3,315	43.5	3,385	44.6	3,460	45.8	3,540	64,700	100%
Alliant Power Pro 2000-MR	40.3	3,225	41.4	3,300	42.5	3,370	43.7	3,450	44.8	3,525	65,000	97%
Norma 204	43.5	3,200	44.7	3,275	45.9	3,355	47.1	3,440	48.3	3,520	64,900	104%
Vihtavuori N550	40.4	3,215	41.5	3,285	42.6	3,355	43.8	3,430	44.9	3,500	65,000	97%
IMR 4350	41.6	3,155	42.8	3,235	43.9	3,310	45.1	3,390	46.2	3,465	64,700	102%
Reload Swiss RS50	39.2	3,175	40.3	3,245	41.4	3,315	42.5	3,390	43.6	3,460	64,900	94%
Vihtavuori N540	37.7	3,180	38.8	3,255	39.8	3,320	40.9	3,390	41.9	3,455	64,800	91%
Shooters World The Creed	38.3	3,165	39.3	3,230	40.4	3,305	41.5	3,380	42.5	3,445	64,800	91%
Norma MRP	44.2	3,115	45.4	3,195	46.7	3,280	47.9	3,360	49.1	3,440	62,000	105%
Hodgdon Varget	36.9	3,160	37.9	3,225	39.0	3,300	40.0	3,370	41.0	3,435	64,700	88%
Hodgdon H4831SC	43.9	3,105	45.1	3,185	46.3	3,260	47.6	3,345	48.8	3,425	65,000	101%
Vihtavuori N160	42.4	3,110	43.6	3,190	44.8	3,265	45.9	3,335	47.1	3,415	64,800	105%
IMR 4831	42.1	3,085	43.3	3,165	44.5	3,245	45.6	3,320	46.8	3,405	64,800	103%

85 gr Bullet · 25" barrel

COAL: 2.245" • Bullet length: 1.002" • Seat depth: 0.427" • Usable capacity: 48.2 / 53.0 gr H_2O

Powder	STEP 1 · 90%		STEP 2		STEP 3		STEP 4		STEP 5 · LIMIT			
	gr	fps	gr	fps	gr	fps	gr	fps	gr	fps	psi	Fill
Hodgdon SUPERFORMANCE	44.6	3,195	45.8	3,275	47.0	3,355	48.3	3,440	49.5	3,520	65,000	100%
Winchester StaBALL 6.5	42.9	3,195	44.1	3,270	45.3	3,345	46.5	3,425	47.7	3,505	64,700	100%
Hodgdon Leverevolution	39.0	3,210	40.1	3,285	41.1	3,350	42.2	3,425	43.3	3,495	65,000	86%
Hodgdon H414	42.0	3,180	43.2	3,255	44.4	3,335	45.5	3,405	46.7	3,490	64,700	99%
Winchester 760	42.0	3,175	43.2	3,250	44.4	3,330	45.5	3,400	46.7	3,480	64,800	100%
Hodgdon H4350	41.3	3,160	42.4	3,235	43.6	3,315	44.8	3,395	45.9	3,465	64,700	96%
Accurate 2700	41.6	3,160	42.8	3,235	43.9	3,310	45.1	3,390	46.2	3,460	64,600	98%
Alliant Reloder 16	41.0	3,160	42.1	3,230	43.3	3,305	44.4	3,380	45.5	3,450	64,900	105%
Vihtavuori N550	39.4	3,120	40.5	3,185	41.6	3,255	42.7	3,325	43.8	3,395	64,800	95%
IMR 4350	40.8	3,085	41.9	3,155	43.0	3,225	44.2	3,305	45.3	3,380	64,700	101%
Ramshot Big Game	39.7	3,085	40.8	3,155	41.9	3,225	43.0	3,300	44.1	3,370	64,700	93%
Reload Swiss RS50	38.5	3,085	39.6	3,155	40.6	3,220	41.7	3,290	42.8	3,365	64,900	93%
Hodgdon H4831SC	43.2	3,045	44.4	3,120	45.6	3,200	46.8	3,275	48.0	3,355	64,900	100%
IMR 7828	44.8	3,030	46.0	3,105	47.3	3,190	48.5	3,270	49.8	3,355	64,900	104%
IMR 4831	41.5	3,030	42.6	3,105	43.8	3,185	45.0	3,265	46.1	3,340	64,900	103%
Vihtavuori N540	36.8	3,080	37.8	3,145	38.8	3,210	39.9	3,280	40.9	3,340	64,700	90%
Accurate 4064	36.8	3,060	37.8	3,125	38.8	3,190	39.9	3,265	40.9	3,330	64,600	94%
Accurate 4350	40.4	3,035	41.5	3,110	42.6	3,180	43.8	3,255	44.9	3,330	64,900	97%
Vihtavuori N160	41.6	3,040	42.8	3,115	43.9	3,185	45.1	3,260	46.2	3,330	64,800	104%
Alliant Reloder 19	42.1	2,995	43.3	3,075	44.5	3,155	45.6	3,225	46.8	3,305	64,800	103%

90 gr Bullet · 25" barrel

COAL: 2.245" • Bullet length: 1.091" • Seat depth: 0.516" • Usable capacity: 47.3 / 53.0 gr H_2O

Powder	STEP 1 · 90%		STEP 2		STEP 3		STEP 4		STEP 5 · LIMIT			
	gr	fps	gr	fps	gr	fps	gr	fps	gr	fps	psi	Fill
Hodgdon SUPERFORMANCE	43.5	3,115	44.7	3,190	45.9	3,270	47.1	3,350	48.3	3,430	64,800	100%
Winchester StaBALL 6.5	41.9	3,105	43.1	3,185	44.3	3,260	45.4	3,330	46.6	3,405	65,000	99%
Hodgdon H414	41.0	3,095	42.1	3,165	43.3	3,240	44.5	3,320	45.6	3,395	64,900	98%
Winchester 760	41.0	3,090	42.1	3,160	43.3	3,235	44.5	3,315	45.6	3,390	65,000	99%
Hodgdon Leverevolution	37.9	3,105	39.0	3,175	40.0	3,245	41.0	3,310	42.1	3,380	64,800	85%
Alliant Reloder 26	44.5	3,060	45.7	3,135	47.0	3,220	48.2	3,295	49.4	3,375	61,500	105%
Hodgdon H4350	40.2	3,075	41.3	3,150	42.5	3,225	43.6	3,300	44.7	3,370	64,900	95%
Accurate 2700	40.6	3,070	41.7	3,145	42.9	3,220	44.0	3,290	45.1	3,365	64,800	97%
Alliant Power Pro 4000-MR	41.9	3,025	43.0	3,095	44.2	3,170	45.4	3,250	46.5	3,320	64,800	100%
Norma MRP	42.9	3,010	44.1	3,085	45.3	3,165	46.5	3,240	47.7	3,320	64,100	105%
IMR 4350	39.7	3,000	40.8	3,070	41.9	3,140	43.0	3,210	44.1	3,285	64,700	100%
Ramshot Big Game	38.7	2,995	39.8	3,065	40.9	3,135	41.9	3,200	43.0	3,270	64,800	93%
Alliant Reloder 22	42.0	2,960	43.2	3,040	44.4	3,115	45.5	3,190	46.7	3,265	64,300	105%
Hodgdon H4831SC	42.1	2,965	43.3	3,040	44.5	3,120	45.6	3,190	46.8	3,265	64,700	100%
Winchester StaBALL Match	36.6	2,995	37.6	3,060	38.7	3,130	39.7	3,195	40.7	3,260	64,700	97%
IMR 4831	40.5	2,955	41.6	3,025	42.8	3,105	43.9	3,180	45.0	3,255	64,800	102%
Accurate 4350	39.4	2,955	40.5	3,030	41.6	3,100	42.7	3,170	43.8	3,240	64,900	97%
Vihtavuori N160	40.5	2,955	41.6	3,025	42.8	3,100	43.9	3,170	45.0	3,240	64,800	103%
Alliant Reloder 19	41.1	2,925	42.3	3,005	43.4	3,075	44.6	3,155	45.7	3,230	64,900	103%
Hodgdon H4831	41.6	2,905	42.8	2,980	43.9	3,050	45.1	3,130	46.2	3,200	61,800	105%

95 gr Bullet · 25" barrel

COAL: 2.240" • Bullet length: 1.125" • Seat depth: 0.554" • Usable capacity: 47.1 / 53.0 gr H_2O

Powder	STEP 1 · 90%		STEP 2		STEP 3		STEP 4		STEP 5 · LIMIT			
	gr	fps	gr	fps	gr	fps	gr	fps	gr	fps	psi	Fill
Hodgdon SUPERFORMANCE	42.9	3,055	44.1	3,130	45.3	3,205	46.5	3,285	47.7	3,365	64,700	99%
Alliant Reloder 26	44.3	3,030	45.5	3,105	46.8	3,190	48.0	3,265	49.2	3,345	62,900	105%
Ramshot Hunter	41.9	3,035	43.0	3,105	44.2	3,180	45.4	3,255	46.5	3,330	63,400	105%
Hodgdon H414	40.5	3,035	41.6	3,105	42.8	3,180	43.9	3,250	45.0	3,325	64,900	97%
Winchester StaBALL 6.5	41.3	3,040	42.4	3,105	43.6	3,180	44.8	3,255	45.9	3,325	64,600	98%
Winchester 760	40.5	3,030	41.6	3,100	42.8	3,175	43.9	3,245	45.0	3,315	64,900	98%
Vihtavuori N555	41.4	3,015	42.5	3,085	43.7	3,160	44.9	3,240	46.0	3,310	62,700	105%
Hodgdon H4350	39.6	3,015	40.7	3,085	41.8	3,155	42.9	3,225	44.0	3,300	64,800	94%
Norma 204	41.3	2,990	42.4	3,060	43.6	3,140	44.8	3,215	45.9	3,285	64,900	102%
Norma MRP	42.6	2,975	43.8	3,050	45.0	3,125	46.1	3,195	47.3	3,270	64,900	104%
Alliant Reloder 16	39.2	2,995	40.3	3,065	41.4	3,135	42.4	3,195	43.5	3,265	64,800	102%
IMR 7828SSC	42.8	2,960	44.0	3,035	45.1	3,105	46.3	3,180	47.5	3,260	63,600	105%
Alliant Reloder 22	41.7	2,930	42.9	3,005	44.0	3,075	45.1	3,145	46.3	3,225	64,900	104%
IMR 4350	39.1	2,940	40.2	3,010	41.3	3,080	42.3	3,140	43.4	3,215	64,700	99%
IMR 4831	40.1	2,910	41.2	2,985	42.3	3,055	43.4	3,130	44.5	3,200	64,800	101%
Ramshot Big Game	38.2	2,935	39.3	3,005	40.3	3,065	41.4	3,135	42.4	3,200	65,000	92%
Winchester Supreme 780	44.2	2,880	45.4	2,955	46.7	3,035	47.9	3,115	49.1	3,190	62,400	105%
Alliant Reloder 19	40.7	2,890	41.8	2,960	43.0	3,035	44.1	3,105	45.2	3,180	65,000	102%
Accurate 4350	38.9	2,905	40.0	2,970	41.0	3,035	42.1	3,105	43.2	3,175	64,800	96%
Hodgdon Varget	34.6	2,900	35.5	2,960	36.5	3,025	37.5	3,090	38.4	3,150	64,700	85%

100 gr Bullet · 25" barrel

COAL: 2.240" • Bullet length: 1.058" • Seat depth: 0.488" • Usable capacity: 47.5 / 53.0 gr H_2O

Powder	STEP 1 · 90%		STEP 2		STEP 3		STEP 4		STEP 5 · LIMIT			
	gr	fps	gr	fps	gr	fps	gr	fps	gr	fps	psi	Fill
Alliant Reloder 26	44.5	3,005	45.7	3,080	47.0	3,160	48.2	3,235	49.4	3,310	64,600	104%
Hodgdon SUPERFORMANCE	42.7	2,995	43.9	3,070	45.0	3,140	46.2	3,215	47.4	3,290	64,700	98%
Ramshot Hunter	41.9	2,985	43.1	3,060	44.3	3,130	45.4	3,200	46.6	3,275	64,900	104%
Hodgdon Hybrid 100V	40.1	2,980	41.2	3,050	42.3	3,120	43.4	3,195	44.5	3,265	63,100	105%
Vihtavuori N555	41.3	2,980	42.4	3,045	43.6	3,120	44.8	3,195	45.9	3,265	65,000	104%
Winchester StaBALL 6.5	41.0	2,965	42.1	3,030	43.3	3,105	44.4	3,170	45.5	3,240	64,800	97%
Hodgdon H414	40.1	2,955	41.2	3,025	42.4	3,100	43.5	3,170	44.6	3,235	64,700	96%
Winchester 760	40.1	2,950	41.2	3,015	42.4	3,090	43.5	3,160	44.6	3,230	64,700	96%
IMR 7828SSC	42.7	2,920	43.9	2,990	45.0	3,060	46.2	3,135	47.4	3,210	64,700	104%
Norma 204	41.0	2,925	42.1	2,990	43.3	3,065	44.5	3,140	45.6	3,210	64,700	101%
Winchester Supreme 780	44.6	2,875	45.8	2,950	47.0	3,025	48.3	3,105	49.5	3,180	64,800	105%
Alliant Reloder 22	41.4	2,875	42.5	2,940	43.7	3,015	44.9	3,090	46.0	3,160	64,900	103%
IMR 7828	42.7	2,865	43.9	2,940	45.0	3,005	46.2	3,080	47.4	3,155	64,800	100%
Hodgdon H4831SC	41.4	2,860	42.5	2,930	43.7	3,000	44.9	3,075	46.0	3,145	64,900	97%
IMR 4831	39.9	2,860	41.0	2,925	42.1	3,000	43.2	3,070	44.3	3,140	64,800	100%
IMR 4350	38.7	2,865	39.8	2,935	40.9	3,005	41.9	3,065	43.0	3,135	65,000	97%
Hodgdon H4831	41.5	2,850	42.6	2,915	43.8	2,990	45.0	3,065	46.1	3,130	64,800	104%
Alliant Reloder 19	40.4	2,830	41.5	2,900	42.6	2,970	43.8	3,045	44.9	3,115	64,800	100%
Shooters World SW4350	40.7	2,835	41.8	2,900	43.0	2,975	44.1	3,045	45.2	3,110	64,800	103%
Accurate 4350	38.5	2,830	39.6	2,900	40.6	2,960	41.7	3,030	42.8	3,100	64,800	94%

105 gr Bullet · 25" barrel

COAL: 2.300" • Bullet length: 1.230" • Seat depth: 0.600" • Usable capacity: 46.3 / 53.0 gr H_2O

Powder	STEP 1 · 90%		STEP 2		STEP 3		STEP 4		STEP 5 · LIMIT			
	gr	fps	gr	fps	gr	fps	gr	fps	gr	fps	psi	Fill
Alliant Reloder 26	43.4	2,940	44.6	3,010	45.8	3,085	47.0	3,160	48.2	3,240	64,900	104%
Hodgdon SUPERFORMANCE	41.6	2,925	42.8	3,000	43.9	3,065	45.1	3,140	46.2	3,210	64,700	98%
Ramshot Hunter	40.9	2,915	42.0	2,980	43.1	3,050	44.3	3,125	45.4	3,195	64,900	104%
Hodgdon Hybrid 100V	39.0	2,900	40.1	2,970	41.1	3,035	42.2	3,110	43.3	3,180	62,900	105%
Vihtavuori N555	40.1	2,900	41.2	2,970	42.4	3,045	43.5	3,115	44.6	3,180	64,800	103%
Reload Swiss RS62	40.3	2,870	41.4	2,940	42.5	3,010	43.7	3,085	44.8	3,160	64,700	101%
Winchester StaBALL 6.5	39.9	2,885	41.0	2,950	42.1	3,020	43.2	3,085	44.3	3,155	64,700	96%
Reload Swiss RS60	38.3	2,870	39.4	2,940	40.5	3,010	41.5	3,075	42.6	3,145	65,000	95%
Winchester 760	39.1	2,880	40.2	2,945	41.3	3,015	42.3	3,075	43.4	3,145	64,600	96%
IMR 7828SSC	41.5	2,845	42.6	2,915	43.8	2,985	45.0	3,060	46.1	3,130	64,600	103%
Norma MRP	41.2	2,845	42.4	2,915	43.5	2,985	44.6	3,050	45.8	3,125	65,000	103%
Winchester Supreme 780	43.5	2,820	44.7	2,890	45.9	2,965	47.1	3,040	48.3	3,115	65,000	105%
Alliant Power Pro 4000-MR	40.1	2,835	41.2	2,900	42.3	2,970	43.4	3,040	44.5	3,105	64,700	98%
Alliant Reloder 22	40.3	2,805	41.4	2,875	42.5	2,940	43.7	3,015	44.8	3,085	64,900	103%
Hodgdon H4831SC	40.3	2,790	41.4	2,860	42.5	2,925	43.7	3,000	44.8	3,070	64,800	97%
IMR 4831	38.9	2,790	40.0	2,860	41.0	2,925	42.1	2,995	43.2	3,065	64,900	100%
Accurate 3100	40.3	2,770	41.4	2,835	42.5	2,905	43.7	2,980	44.8	3,050	63,400	105%
IMR 4350	37.6	2,790	38.6	2,855	39.7	2,920	40.8	2,990	41.8	3,050	65,000	97%
Alliant Reloder 19	39.4	2,770	40.5	2,840	41.6	2,910	42.7	2,980	43.8	3,045	64,900	100%
Shooters World SW4350	39.6	2,765	40.7	2,830	41.8	2,895	42.9	2,965	44.0	3,030	64,700	103%

115 gr Bullet · 25" barrel

COAL: 2.360" • Bullet length: 1.342" • Seat depth: 0.652" • Usable capacity: 45.8 / 53.0 gr H_2O

Powder	STEP 1 · 90%		STEP 2		STEP 3		STEP 4		STEP 5 · LIMIT			
	gr	fps	gr	fps	gr	fps	gr	fps	gr	fps	psi	Fill
Alliant Reloder 26	42.2	2,825	43.4	2,900	44.5	2,965	45.7	3,040	46.9	3,115	64,800	103%
Hodgdon SUPERFORMANCE	40.5	2,810	41.6	2,875	42.8	2,950	43.9	3,015	45.0	3,085	64,900	96%
Hodgdon Hybrid 100V	38.4	2,810	39.5	2,880	40.5	2,940	41.6	3,010	42.7	3,080	64,800	105%
Alliant Reloder 23	39.9	2,790	41.0	2,860	42.1	2,925	43.2	2,990	44.3	3,060	64,300	105%
Ramshot Hunter	39.7	2,790	40.8	2,855	41.9	2,920	43.0	2,985	44.1	3,055	64,700	102%
Reload Swiss RS62	39.3	2,765	40.4	2,835	41.5	2,900	42.6	2,970	43.7	3,035	65,000	99%
Vihtavuori N555	38.5	2,770	39.6	2,835	40.6	2,895	41.7	2,960	42.8	3,030	64,700	100%
Vihtavuori N560	41.4	2,770	42.5	2,830	43.7	2,900	44.9	2,965	46.0	3,030	62,900	105%
Winchester StaBALL 6.5	38.7	2,755	39.8	2,815	40.9	2,880	41.9	2,940	43.0	3,005	64,900	95%
IMR 7828SSC	40.2	2,730	41.3	2,795	42.5	2,870	43.6	2,935	44.7	3,000	64,700	101%
Norma MRP	40.1	2,735	41.2	2,795	42.3	2,865	43.4	2,930	44.5	2,995	64,900	101%
Alliant Power Pro 4000-MR	39.0	2,720	40.1	2,785	41.1	2,845	42.2	2,910	43.3	2,975	64,700	96%
Alliant Reloder 22	39.2	2,700	40.3	2,765	41.4	2,830	42.4	2,890	43.5	2,960	64,700	101%
IMR 7828	40.2	2,690	41.3	2,755	42.5	2,825	43.6	2,890	44.7	2,960	64,800	98%
Hodgdon H4831SC	39.2	2,680	40.3	2,745	41.4	2,810	42.5	2,880	43.6	2,945	64,800	96%
Alliant Reloder 16	36.3	2,695	37.3	2,755	38.3	2,815	39.3	2,875	40.3	2,935	65,000	98%
Vihtavuori N165	40.3	2,675	41.4	2,740	42.5	2,800	43.7	2,870	44.8	2,935	64,100	105%
Alliant Reloder 19	38.3	2,665	39.4	2,735	40.5	2,800	41.5	2,860	42.6	2,930	64,700	99%
IMR 4007 SSC	36.4	2,680	37.4	2,740	38.4	2,800	39.4	2,865	40.4	2,925	64,700	94%
IMR 4350	36.3	2,660	37.3	2,720	38.3	2,780	39.3	2,840	40.3	2,900	64,600	94%

6 GT

George Gardner of GA Precision and Tom Jacobs of Vapor Trail Bullets developed the 6mm GT in 2019. The name comes from their initials. They designed it for Precision Rifle Series (PRS) and National Rifle League (NRL) competition. Their goals were reliable feeding from unmodified AICS-pattern magazines, good barrel life and enough capacity to drive long high-ballistic-coefficient 6mm bullets with forgiving powders. The case is longer than that of the 6mm Dasher. It also has a longer neck and a 35-degree shoulder. Hornady submitted the cartridge to SAAMI and it was accepted in 2022.

Match bullets of about 103 to 107 grains are commonly driven at roughly 3,000 to 3,080 fps. The cartridge spread quickly among PRS and NRL competitors. It is also used for hunting. Hornady and Alpha Munitions produce brass. Loaded ammunition is available from Hornady and from smaller makers such as GA Precision.

Cartridge specifications	
Bullet Diameter	**0.243" (6.17 mm)**
Max Case Length	**1.725" (43.82 mm)**
Case Trim Length	**1.705" (43.31 mm)**
Max COAL	**2.640" (67.06 mm)**
Primer Pocket	**Small Rifle**
Standard Twist	**1:8"**
Case Capacity	**44.0 gr H_2O**
Max Pressure	**62,000 psi (SAAMI)**

65 gr Bullet · 25" barrel

COAL: 2.295" • Bullet length: 0.840" • Seat depth: 0.270" • Usable capacity: 41.0 / 44.0 gr H_2O

Powder	STEP 1 · 90%		STEP 2		STEP 3		STEP 4		STEP 5 · LIMIT			
	gr	fps	gr	fps	gr	fps	gr	fps	gr	fps	psi	Fill
Hodgdon Leverevolution	37.9	3,500	39.0	3,585	40.0	3,665	41.0	3,745	42.1	3,835	61,800	98%
Accurate 2520	37.1	3,490	38.1	3,565	39.2	3,650	40.2	3,730	41.2	3,810	61,600	103%
Reload Swiss RS52	36.6	3,405	37.6	3,485	38.7	3,575	39.7	3,655	40.7	3,740	61,800	104%
Hodgdon BL-C(2)	37.0	3,400	38.0	3,480	39.0	3,560	40.1	3,650	41.1	3,730	61,900	101%
IMR 4895	35.8	3,410	36.8	3,490	37.8	3,570	38.8	3,650	39.8	3,730	61,800	100%
IMR 4064	36.2	3,410	37.2	3,485	38.2	3,565	39.2	3,645	40.2	3,725	60,500	105%
Winchester 748	36.5	3,405	37.5	3,485	38.5	3,565	39.5	3,645	40.5	3,725	61,800	102%
Vihtavuori N540	36.5	3,415	37.5	3,490	38.5	3,565	39.5	3,645	40.5	3,720	60,800	105%
Accurate 2495	35.1	3,385	36.1	3,465	37.0	3,540	38.0	3,620	39.0	3,700	61,900	96%
Ramshot TAC	34.7	3,390	35.7	3,470	36.6	3,545	37.5	3,615	38.5	3,695	61,700	100%
Vihtavuori N135	34.0	3,390	35.0	3,470	35.9	3,540	36.8	3,610	37.8	3,690	61,900	100%
Hodgdon Varget	35.5	3,355	36.5	3,435	37.5	3,515	38.4	3,590	39.4	3,670	61,700	100%
Hodgdon Benchmark	33.6	3,370	34.5	3,440	35.5	3,520	36.4	3,590	37.3	3,665	61,800	100%
Reload Swiss RS50	36.8	3,325	37.8	3,400	38.8	3,480	39.9	3,565	40.9	3,645	60,300	105%
Vihtavuori N140	35.6	3,330	36.6	3,410	37.5	3,480	38.5	3,560	39.5	3,640	61,700	98%
Norma 203B	35.6	3,315	36.6	3,395	37.6	3,475	38.6	3,555	39.6	3,635	61,600	105%
Hodgdon H335	33.9	3,320	34.9	3,400	35.8	3,470	36.8	3,550	37.7	3,620	61,900	91%
Ramshot Big Game	38.0	3,270	39.0	3,350	40.1	3,435	41.2	3,520	42.2	3,595	59,600	105%
Accurate 2230	33.2	3,300	34.1	3,370	35.0	3,440	36.0	3,515	36.9	3,585	61,800	91%
Vihtavuori N150	34.5	3,215	35.5	3,295	36.4	3,365	37.3	3,435	38.3	3,515	59,700	105%

70 gr Bullet · 25" barrel

COAL: 2.232" • Bullet length: 0.866" • Seat depth: 0.359" • Usable capacity: 40.1 / 44.0 gr H_2O

Powder	STEP 1 · 90%		STEP 2		STEP 3		STEP 4		STEP 5 · LIMIT			
	gr	fps	gr	fps	gr	fps	gr	fps	gr	fps	psi	Fill
Hodgdon Leverevolution	36.9	3,390	37.9	3,470	39.0	3,555	40.0	3,635	41.0	3,715	61,900	98%
Accurate 2520	36.1	3,370	37.1	3,450	38.1	3,525	39.1	3,605	40.1	3,680	61,900	103%
IMR 4064	35.4	3,325	36.4	3,400	37.3	3,470	38.3	3,550	39.3	3,630	62,000	105%
Reload Swiss RS52	35.6	3,300	36.6	3,380	37.6	3,460	38.6	3,540	39.6	3,620	61,600	104%
Hodgdon BL-C(2)	36.0	3,295	37.0	3,375	38.0	3,450	39.0	3,535	40.0	3,615	61,800	100%
Winchester 748	35.5	3,300	36.5	3,375	37.5	3,455	38.4	3,525	39.4	3,605	61,700	101%
Alliant Reloder 15	35.5	3,300	36.5	3,375	37.5	3,450	38.4	3,520	39.4	3,600	60,500	105%
Vihtavuori N540	35.5	3,305	36.5	3,380	37.5	3,455	38.4	3,525	39.4	3,600	61,600	104%
Shooters World Match Rifle	34.9	3,285	35.9	3,360	36.8	3,435	37.8	3,515	38.8	3,595	61,900	100%
Accurate 2495	34.1	3,275	35.0	3,345	36.0	3,425	37.0	3,510	37.9	3,580	61,800	95%
Vihtavuori N530	32.2	3,290	33.1	3,360	34.0	3,435	34.9	3,505	35.8	3,580	61,600	96%
Norma 202	34.2	3,280	35.2	3,355	36.1	3,425	37.0	3,495	38.0	3,570	61,900	103%
IMR 8208 XBR	33.4	3,275	34.3	3,345	35.3	3,425	36.2	3,495	37.1	3,565	61,700	100%
Alliant AR-Comp	32.5	3,275	33.4	3,345	34.3	3,415	35.2	3,485	36.1	3,555	62,000	96%
Hodgdon Varget	34.5	3,255	35.5	3,330	36.4	3,405	37.3	3,475	38.3	3,555	61,700	99%
IMR 4166	34.0	3,250	35.0	3,330	35.9	3,405	36.8	3,475	37.8	3,555	61,600	105%
Accurate 2460	33.2	3,225	34.1	3,295	35.0	3,360	36.0	3,440	36.9	3,510	61,800	92%
Hodgdon H335	32.9	3,200	33.8	3,275	34.8	3,350	35.7	3,420	36.6	3,490	61,700	90%
Vihtavuori N133	31.4	3,215	32.3	3,285	33.1	3,350	34.0	3,420	34.9	3,490	61,900	100%
Shooters World Precision Rifle	34.1	3,155	35.0	3,230	36.0	3,305	37.0	3,385	37.9	3,460	58,900	105%

75 gr Bullet · 25" barrel

COAL: 2.270" • Bullet length: 0.879" • Seat depth: 0.334" • Usable capacity: 40.3 / 44.0 gr H_2O

Powder	STEP 1 · 90%		STEP 2		STEP 3		STEP 4		STEP 5 · LIMIT			
	gr	fps	gr	fps	gr	fps	gr	fps	gr	fps	psi	Fill
Hodgdon Leverevolution	36.5	3,295	37.5	3,375	38.5	3,450	39.5	3,525	40.5	3,605	61,700	96%
Accurate 2520	35.6	3,265	36.6	3,340	37.5	3,405	38.5	3,480	39.5	3,560	61,900	101%
Hodgdon BL-C(2)	35.7	3,210	36.7	3,290	37.7	3,365	38.7	3,445	39.7	3,520	62,000	99%
Reload Swiss RS52	35.3	3,215	36.3	3,295	37.3	3,370	38.2	3,440	39.2	3,520	61,600	102%
IMR 4064	34.8	3,220	35.8	3,295	36.8	3,370	37.7	3,440	38.7	3,515	62,000	103%
Winchester 748	35.1	3,205	36.1	3,285	37.0	3,355	38.0	3,430	39.0	3,510	61,800	99%
Alliant Reloder 15	35.1	3,210	36.1	3,285	37.0	3,355	38.0	3,430	39.0	3,505	61,700	103%
Accurate 2495	33.8	3,190	34.7	3,260	35.6	3,330	36.6	3,405	37.5	3,475	61,900	94%
Vihtavuori N540	34.7	3,185	35.7	3,255	36.7	3,330	37.6	3,395	38.6	3,470	61,600	102%
Hodgdon Varget	34.1	3,165	35.0	3,235	36.0	3,310	37.0	3,390	37.9	3,460	62,000	98%
Ramshot TAC	33.3	3,170	34.2	3,240	35.1	3,305	36.1	3,385	37.0	3,455	61,600	98%
Vihtavuori N530	31.5	3,175	32.4	3,245	33.3	3,315	34.1	3,380	35.0	3,450	61,600	93%
Norma 202	33.6	3,165	34.5	3,235	35.5	3,305	36.4	3,375	37.3	3,445	61,800	100%
Shooters World Precision Rifle	34.3	3,120	35.3	3,195	36.2	3,265	37.1	3,335	38.1	3,415	61,800	105%
Vihtavuori N140	33.9	3,115	34.9	3,190	35.8	3,260	36.8	3,335	37.7	3,405	61,700	95%
Alliant Reloder 17	36.5	3,065	37.5	3,145	38.5	3,220	39.6	3,310	40.6	3,390	61,800	101%
Hodgdon H414	37.4	3,080	38.4	3,155	39.5	3,235	40.5	3,315	41.5	3,390	60,100	105%
Accurate 2460	32.6	3,110	33.5	3,175	34.4	3,240	35.3	3,310	36.2	3,375	61,700	90%
Winchester StaBALL Match	33.9	3,085	34.9	3,160	35.8	3,230	36.8	3,305	37.7	3,375	58,700	105%
Vihtavuori N150	33.4	3,060	34.3	3,125	35.3	3,200	36.2	3,270	37.1	3,340	61,900	103%

80 gr Bullet · 25" barrel

COAL: 2.295" • Bullet length: 1.077" • Seat depth: 0.507" • Usable capacity: 38.4 / 44.0 gr H_2O

Powder	STEP 1 · 90%		STEP 2		STEP 3		STEP 4		STEP 5 · LIMIT			
	gr	fps	gr	fps	gr	fps	gr	fps	gr	fps	psi	Fill
Hodgdon Leverevolution	34.9	3,170	35.9	3,245	36.8	3,315	37.8	3,390	38.8	3,470	61,800	97%
Accurate 2520	34.0	3,130	35.0	3,205	35.9	3,270	36.8	3,340	37.8	3,420	61,700	101%
Reload Swiss RS52	33.8	3,095	34.8	3,175	35.7	3,245	36.6	3,315	37.6	3,395	61,900	103%
Hodgdon BL-C(2)	34.2	3,090	35.2	3,165	36.1	3,240	37.0	3,310	38.0	3,385	61,900	99%
Alliant Reloder 15	33.6	3,095	34.5	3,160	35.5	3,235	36.4	3,305	37.3	3,375	61,800	104%
IMR 4064	33.2	3,095	34.1	3,160	35.0	3,230	36.0	3,305	36.9	3,375	61,800	103%
Winchester 748	33.6	3,085	34.5	3,155	35.5	3,230	36.4	3,300	37.3	3,375	61,600	100%
Hodgdon CFE 223	34.3	3,070	35.3	3,145	36.2	3,210	37.1	3,280	38.1	3,360	61,800	101%
Shooters World Match Rifle	33.0	3,065	33.9	3,135	34.9	3,215	35.8	3,285	36.7	3,355	61,600	98%
Accurate 2495	32.2	3,055	33.1	3,125	34.0	3,195	34.9	3,265	35.8	3,340	61,700	94%
Vihtavuori N540	33.2	3,060	34.1	3,125	35.0	3,190	36.0	3,270	36.9	3,335	61,600	102%
Hodgdon Varget	32.6	3,045	33.5	3,115	34.4	3,185	35.3	3,255	36.2	3,325	61,900	98%
Ramshot Big Game	35.6	3,025	36.6	3,100	37.5	3,165	38.5	3,240	39.5	3,320	61,700	105%
Vihtavuori N530	30.2	3,060	31.0	3,125	31.9	3,195	32.7	3,255	33.5	3,320	61,900	94%
Norma 202	32.0	3,030	32.9	3,100	33.8	3,165	34.7	3,235	35.6	3,305	61,600	101%
Shooters World The Creed	33.5	3,020	34.4	3,085	35.4	3,165	36.3	3,235	37.2	3,305	61,600	101%
Alliant Power Pro Varmint	32.0	3,020	32.9	3,090	33.8	3,155	34.6	3,220	35.5	3,290	61,700	98%
Alliant AR-Comp	30.4	3,015	31.3	3,080	32.1	3,145	32.9	3,205	33.8	3,275	61,800	94%
Shooters World Precision Rifle	32.7	2,995	33.6	3,060	34.5	3,135	35.4	3,205	36.3	3,275	61,200	105%
Vihtavuori N140	32.5	3,000	33.4	3,070	34.3	3,140	35.2	3,205	36.1	3,275	62,000	96%

85 gr Bullet · 25" barrel

COAL: 2.305" • Bullet length: 0.919" • Seat depth: 0.339" • Usable capacity: 40.3 / 44.0 gr H_2O

Powder	STEP 1 · 90%		STEP 2		STEP 3		STEP 4		STEP 5 · LIMIT			
	gr	fps	gr	fps	gr	fps	gr	fps	gr	fps	psi	Fill
Hodgdon Leverevolution	35.5	3,130	36.5	3,200	37.5	3,275	38.4	3,340	39.4	3,415	61,900	93%
Hodgdon H4350	37.4	3,040	38.5	3,120	39.5	3,195	40.5	3,270	41.6	3,350	61,800	104%
Hodgdon BL-C(2)	34.8	3,055	35.8	3,125	36.8	3,200	37.7	3,265	38.7	3,345	61,900	96%
Reload Swiss RS52	34.4	3,060	35.4	3,135	36.3	3,200	37.3	3,275	38.2	3,345	61,700	100%
Accurate 2520	34.3	3,060	35.3	3,135	36.2	3,200	37.1	3,265	38.1	3,335	61,900	97%
Alliant Power Pro 2000-MR	35.9	3,045	36.9	3,115	37.9	3,190	38.9	3,265	39.9	3,335	61,800	104%
Winchester 748	34.1	3,040	35.0	3,105	36.0	3,180	37.0	3,255	37.9	3,320	61,600	97%
IMR 4064	33.6	3,045	34.5	3,110	35.5	3,180	36.4	3,245	37.3	3,315	61,700	99%
Alliant Reloder 15	33.8	3,030	34.8	3,100	35.7	3,165	36.6	3,230	37.6	3,305	61,900	100%
Shooters World Match Rifle	33.6	3,030	34.5	3,095	35.5	3,170	36.4	3,235	37.3	3,305	61,800	95%
Vihtavuori N550	35.9	3,020	36.9	3,085	37.9	3,155	38.9	3,225	39.9	3,295	61,900	104%
Accurate 2495	32.8	3,015	33.7	3,085	34.6	3,150	35.5	3,215	36.4	3,285	61,700	91%
Hodgdon H380	35.8	2,990	36.8	3,060	37.8	3,135	38.8	3,205	39.8	3,280	60,300	105%
IMR 4895	32.9	3,010	33.8	3,075	34.8	3,150	35.7	3,215	36.6	3,280	62,000	94%
Ramshot Big Game	36.2	2,995	37.2	3,065	38.2	3,140	39.2	3,210	40.2	3,280	62,000	102%
Winchester 760	36.9	2,980	37.9	3,055	39.0	3,130	40.0	3,205	41.0	3,280	61,900	105%
Hodgdon Varget	33.0	2,995	33.9	3,065	34.9	3,135	35.8	3,205	36.7	3,270	61,800	95%
Vihtavuori N540	33.3	2,985	34.2	3,050	35.1	3,110	36.1	3,185	37.0	3,245	61,600	98%
Hodgdon H4895	31.8	2,985	32.7	3,050	33.5	3,110	34.4	3,175	35.3	3,240	61,800	91%
Shooters World Long Rifle	34.7	2,910	35.7	2,985	36.6	3,050	37.5	3,115	38.5	3,190	60,600	105%

90 gr Bullet · 25" barrel

COAL: 2.441" • Bullet length: 1.094" • Seat depth: 0.378" • Usable capacity: 39.8 / 44.0 gr H_2O

Powder	STEP 1 · 90%		STEP 2		STEP 3		STEP 4		STEP 5 · LIMIT			
	gr	fps	gr	fps	gr	fps	gr	fps	gr	fps	psi	Fill
Hodgdon Leverevolution	34.7	3,030	35.7	3,105	36.6	3,170	37.5	3,235	38.5	3,310	61,600	92%
Hodgdon H4350	36.6	2,965	37.6	3,035	38.7	3,115	39.7	3,190	40.7	3,265	61,800	103%
Reload Swiss RS52	33.8	2,980	34.7	3,045	35.6	3,110	36.6	3,185	37.5	3,250	61,900	99%
Alliant Power Pro 2000-MR	35.2	2,960	36.2	3,035	37.2	3,105	38.1	3,170	39.1	3,245	61,800	103%
Hodgdon BL-C(2)	34.1	2,965	35.0	3,030	36.0	3,105	37.0	3,175	37.9	3,245	61,600	96%
Accurate 2700	36.5	2,940	37.5	3,010	38.5	3,085	39.5	3,155	40.5	3,230	61,800	104%
Winchester 748	33.5	2,960	34.4	3,025	35.4	3,100	36.3	3,165	37.2	3,230	61,900	96%
Accurate 2520	33.4	2,955	34.3	3,020	35.3	3,090	36.2	3,155	37.1	3,220	61,600	96%
IMR 4064	32.8	2,950	33.7	3,015	34.6	3,080	35.5	3,145	36.4	3,210	61,600	98%
Hodgdon CFE 223	34.1	2,935	35.0	3,000	36.0	3,070	37.0	3,140	37.9	3,205	61,900	97%
Shooters World Match Rifle	32.9	2,940	33.8	3,005	34.7	3,070	35.6	3,135	36.5	3,205	61,700	94%
Alliant TS 15.5	33.1	2,925	34.0	2,990	35.0	3,065	35.9	3,130	36.8	3,200	61,600	100%
Ramshot Big Game	35.5	2,915	36.5	2,985	37.5	3,055	38.4	3,120	39.4	3,195	62,000	101%
Winchester 760	36.2	2,905	37.2	2,980	38.2	3,050	39.2	3,120	40.2	3,195	61,800	104%
Vihtavuori N550	34.9	2,920	35.9	2,990	36.8	3,050	37.8	3,120	38.8	3,185	61,700	102%
Reload Swiss RS50	34.1	2,900	35.0	2,965	36.0	3,035	37.0	3,110	37.9	3,170	61,600	100%
Winchester StaBALL Match	33.0	2,890	33.9	2,950	34.9	3,025	35.8	3,090	36.7	3,155	62,000	103%
Accurate 4064	32.7	2,890	33.6	2,955	34.5	3,020	35.4	3,085	36.3	3,150	61,800	101%
Alliant Power Pro Varmint	31.6	2,865	32.5	2,930	33.4	2,995	34.2	3,050	35.1	3,120	61,600	93%
Vihtavuori N140	32.0	2,855	32.9	2,915	33.8	2,980	34.6	3,040	35.5	3,105	62,000	91%

95 gr Bullet · 25" barrel

COAL: 2.320" • Bullet length: 1.144" • Seat depth: 0.550" • Usable capacity: 38.0 / 44.0 gr H_2O

Powder	STEP 1 · 90%		STEP 2		STEP 3		STEP 4		STEP 5 · LIMIT			
	gr	fps	gr	fps	gr	fps	gr	fps	gr	fps	psi	Fill
Hodgdon Leverevolution	33.4	2,935	34.3	3,000	35.3	3,070	36.2	3,140	37.1	3,205	61,900	93%
Hodgdon H4350	35.2	2,875	36.2	2,950	37.2	3,020	38.1	3,090	39.1	3,160	61,800	104%
Alliant Power Pro 2000-MR	33.8	2,860	34.8	2,935	35.7	3,000	36.6	3,065	37.6	3,140	61,800	104%
Hodgdon BL-C(2)	32.9	2,875	33.8	2,940	34.7	3,005	35.6	3,075	36.5	3,140	61,800	96%
Reload Swiss RS52	32.4	2,875	33.3	2,940	34.2	3,005	35.1	3,070	36.0	3,140	61,600	99%
Accurate 2700	35.0	2,840	36.0	2,910	37.0	2,980	37.9	3,050	38.9	3,120	61,500	104%
Norma 201	30.4	2,855	31.3	2,925	32.1	2,990	32.9	3,050	33.8	3,120	61,600	99%
Winchester 748	32.1	2,855	33.0	2,920	33.9	2,985	34.8	3,050	35.7	3,120	61,700	96%
Accurate 2520	32.1	2,855	33.0	2,915	33.9	2,980	34.8	3,045	35.7	3,110	61,700	97%
Hodgdon CFE 223	32.8	2,835	33.7	2,900	34.6	2,965	35.5	3,030	36.4	3,095	61,800	97%
IMR 4064	31.4	2,845	32.3	2,910	33.1	2,965	34.0	3,030	34.9	3,095	61,600	98%
Shooters World Match Rifle	31.6	2,840	32.5	2,905	33.4	2,970	34.2	3,030	35.1	3,095	61,600	95%
Vihtavuori N550	33.6	2,825	34.5	2,890	35.5	2,960	36.4	3,020	37.3	3,085	61,700	103%
Reload Swiss RS50	32.9	2,810	33.8	2,875	34.7	2,940	35.6	3,005	36.5	3,070	61,800	101%
Hodgdon Varget	31.0	2,810	31.9	2,875	32.7	2,935	33.5	2,995	34.4	3,060	61,600	94%
IMR 4895	30.8	2,810	31.7	2,875	32.5	2,935	33.4	3,000	34.2	3,060	61,600	93%
Winchester StaBALL Match	31.8	2,795	32.7	2,860	33.5	2,915	34.4	2,980	35.3	3,045	62,000	104%
Vihtavuori N540	31.2	2,790	32.1	2,850	33.0	2,915	33.8	2,970	34.7	3,035	62,000	97%
Norma 202	30.2	2,765	31.1	2,830	31.9	2,885	32.8	2,950	33.6	3,010	61,900	96%
Vihtavuori N140	30.6	2,745	31.5	2,810	32.3	2,865	33.1	2,925	34.0	2,990	61,600	91%

100 gr Bullet · 25" barrel

COAL: 2.300" • Bullet length: 1.081" • Seat depth: 0.506" • Usable capacity: 38.4 / 44.0 gr H_2O

Powder	STEP 1 · 90%		STEP 2		STEP 3		STEP 4		STEP 5 · LIMIT			
	gr	fps	gr	fps	gr	fps	gr	fps	gr	fps	psi	Fill
Hodgdon Leverevolution	33.0	2,855	33.9	2,915	34.9	2,990	35.8	3,055	36.7	3,120	61,700	91%
Hodgdon H4350	34.8	2,815	35.8	2,885	36.8	2,955	37.7	3,020	38.7	3,090	61,700	102%
Hodgdon SUPERFORMANCE	37.0	2,780	38.0	2,850	39.0	2,920	40.1	3,000	41.1	3,070	59,500	105%
Reload Swiss RS52	32.2	2,805	33.1	2,870	34.0	2,935	34.9	3,000	35.8	3,070	62,000	98%
Alliant Power Pro 2000-MR	33.6	2,800	34.5	2,865	35.5	2,935	36.4	3,000	37.3	3,065	61,800	102%
Reload Swiss RS60	34.7	2,790	35.7	2,860	36.6	2,925	37.5	2,990	38.5	3,065	62,000	103%
Hodgdon BL-C(2)	32.6	2,800	33.5	2,865	34.4	2,930	35.3	2,995	36.2	3,060	61,600	95%
Accurate 2700	34.8	2,780	35.8	2,850	36.8	2,920	37.7	2,985	38.7	3,055	61,600	103%
Winchester 748	31.9	2,790	32.8	2,855	33.6	2,910	34.5	2,975	35.4	3,040	61,700	95%
Hodgdon H414	34.6	2,760	35.5	2,825	36.5	2,895	37.5	2,965	38.4	3,030	61,800	102%
Shooters World Match Rifle	31.3	2,765	32.2	2,830	33.0	2,885	33.9	2,950	34.8	3,015	61,800	93%
Ramshot Big Game	33.8	2,755	34.7	2,815	35.6	2,880	36.6	2,945	37.5	3,010	61,600	100%
Alliant Reloder 15	31.2	2,755	32.1	2,815	33.0	2,880	33.8	2,935	34.7	3,000	61,900	97%
Vihtavuori N550	33.0	2,745	33.9	2,805	34.9	2,870	35.8	2,930	36.7	2,995	62,000	101%
Reload Swiss RS50	32.6	2,740	33.5	2,800	34.4	2,865	35.3	2,925	36.2	2,990	61,800	99%
Hodgdon Varget	30.7	2,740	31.6	2,805	32.4	2,860	33.3	2,925	34.1	2,985	61,900	92%
IMR 4895	30.4	2,730	31.3	2,795	32.1	2,855	32.9	2,910	33.8	2,975	62,000	91%
Accurate 4064	31.1	2,720	32.0	2,785	32.8	2,840	33.6	2,900	34.5	2,965	61,900	100%
Shooters World Long Rifle	32.7	2,700	33.6	2,760	34.5	2,825	35.4	2,890	36.3	2,955	61,800	104%
Vihtavuori N540	30.7	2,700	31.6	2,765	32.4	2,820	33.3	2,880	34.1	2,935	61,900	94%

105 gr Bullet · 25" barrel

COAL: 2.500" • Bullet length: 1.236" • Seat depth: 0.461" • Usable capacity: 38.9 / 44.0 gr H_2O

Powder	STEP 1 · 90%		STEP 2		STEP 3		STEP 4		STEP 5 · LIMIT			
	gr	fps	gr	fps	gr	fps	gr	fps	gr	fps	psi	Fill
Winchester StaBALL 6.5	36.5	2,800	37.5	2,870	38.5	2,935	39.5	3,005	40.5	3,075	61,100	105%
Hodgdon SUPERFORMANCE	37.4	2,775	38.5	2,850	39.5	2,920	40.5	2,990	41.6	3,070	61,700	105%
Hodgdon Leverevolution	32.9	2,795	33.8	2,855	34.7	2,920	35.6	2,980	36.5	3,045	61,800	90%
Hodgdon H4350	34.7	2,770	35.7	2,835	36.6	2,900	37.5	2,960	38.5	3,035	61,700	100%
Reload Swiss RS60	34.6	2,745	35.5	2,810	36.5	2,880	37.5	2,950	38.4	3,015	61,700	102%
Accurate 2700	34.8	2,735	35.8	2,805	36.8	2,875	37.7	2,935	38.7	3,005	61,800	101%
Alliant Power Pro 2000-MR	33.5	2,745	34.4	2,810	35.4	2,875	36.3	2,940	37.2	3,005	62,000	100%
Hodgdon BL-C(2)	32.5	2,745	33.4	2,805	34.3	2,870	35.2	2,935	36.1	2,995	61,600	93%
Winchester 748	31.8	2,735	32.7	2,795	33.5	2,850	34.4	2,915	35.3	2,975	62,000	93%
Hodgdon H380	33.6	2,715	34.5	2,780	35.5	2,845	36.4	2,910	37.3	2,970	61,900	102%
Hodgdon H4831SC	36.5	2,670	37.5	2,740	38.5	2,805	39.6	2,880	40.6	2,950	60,100	105%
IMR 4007 SSC	33.8	2,685	34.8	2,750	35.7	2,815	36.6	2,875	37.6	2,950	61,900	103%
Ramshot Big Game	33.7	2,700	34.6	2,760	35.5	2,825	36.5	2,890	37.4	2,950	61,800	98%
Shooters World Match Rifle	31.1	2,700	32.0	2,765	32.9	2,825	33.7	2,880	34.6	2,945	61,700	91%
Hodgdon CFE 223	32.2	2,695	33.1	2,755	34.0	2,815	34.9	2,880	35.8	2,940	61,600	94%
Accurate 2520	31.1	2,675	32.0	2,735	32.9	2,795	33.7	2,850	34.6	2,915	61,600	91%
Hodgdon Varget	30.5	2,675	31.4	2,740	32.2	2,795	33.0	2,850	33.9	2,915	62,000	91%
Vihtavuori N550	32.6	2,675	33.5	2,730	34.4	2,790	35.3	2,850	36.2	2,910	61,900	98%
Shooters World Long Rifle	32.6	2,645	33.5	2,710	34.4	2,770	35.3	2,835	36.2	2,895	61,700	102%
Vihtavuori N540	30.3	2,625	31.2	2,685	32.0	2,740	32.9	2,800	33.7	2,855	61,900	92%

110 gr Bullet · 25" barrel

COAL: 2.500" • Bullet length: 1.326" • Seat depth: 0.551" • Usable capacity: 37.9 / 44.0 gr H_2O

Powder	STEP 1 · 90%		STEP 2		STEP 3		STEP 4		STEP 5 · LIMIT			
	gr	fps	gr	fps	gr	fps	gr	fps	gr	fps	psi	Fill
Hodgdon SUPERFORMANCE	36.5	2,715	37.5	2,780	38.5	2,850	39.5	2,920	40.5	2,990	61,700	105%
Winchester StaBALL 6.5	35.5	2,725	36.5	2,790	37.5	2,855	38.4	2,920	39.4	2,985	61,100	105%
Hodgdon Leverevolution	32.0	2,715	32.9	2,775	33.8	2,840	34.6	2,895	35.5	2,960	62,000	90%
Hodgdon H4350	33.7	2,695	34.6	2,755	35.5	2,815	36.5	2,885	37.4	2,950	61,800	100%
Reload Swiss RS60	33.7	2,675	34.6	2,740	35.5	2,800	36.5	2,875	37.4	2,935	61,800	102%
Accurate 2700	33.8	2,660	34.8	2,725	35.7	2,790	36.6	2,850	37.6	2,920	61,600	101%
Alliant Power Pro 2000-MR	32.5	2,665	33.4	2,725	34.3	2,785	35.2	2,850	36.1	2,915	61,700	100%
Alliant Reloder 17	32.7	2,640	33.6	2,705	34.5	2,770	35.4	2,830	36.3	2,895	61,900	96%
Winchester 760	33.6	2,640	34.5	2,700	35.5	2,770	36.4	2,830	37.3	2,895	61,900	101%
Ramshot Big Game	32.8	2,630	33.7	2,690	34.6	2,750	35.5	2,810	36.4	2,870	62,000	98%
Shooters World Match Rifle	30.2	2,620	31.1	2,680	31.9	2,735	32.8	2,800	33.6	2,855	61,600	91%
IMR 4451	33.0	2,580	33.9	2,645	34.9	2,710	35.8	2,775	36.7	2,835	61,600	101%
Accurate 2520	30.2	2,590	31.1	2,655	31.9	2,705	32.8	2,770	33.6	2,825	61,900	91%
Hodgdon Varget	29.6	2,595	30.4	2,650	31.3	2,715	32.1	2,770	32.9	2,825	62,000	90%
Shooters World The Creed	30.5	2,590	31.4	2,650	32.2	2,705	33.0	2,760	33.9	2,825	61,900	93%
Vihtavuori N550	31.6	2,590	32.5	2,650	33.4	2,710	34.2	2,760	35.1	2,820	62,000	97%
Shooters World Long Rifle	31.7	2,575	32.6	2,635	33.5	2,695	34.3	2,750	35.2	2,815	61,800	102%
Winchester StaBALL Match	30.4	2,575	31.3	2,635	32.1	2,690	32.9	2,745	33.8	2,810	61,600	100%
Shooters World Precision Rifle	29.8	2,560	30.6	2,615	31.5	2,680	32.3	2,735	33.1	2,795	61,600	97%
Vihtavuori N540	29.3	2,535	30.1	2,590	31.0	2,650	31.8	2,705	32.6	2,760	61,600	91%

115 gr Bullet · 25" barrel

COAL: 2.531" • Bullet length: 1.350" • Seat depth: 0.544" • Usable capacity: 38.0 / 44.0 gr H_2O

Powder	STEP 1 · 90%		STEP 2		STEP 3		STEP 4		STEP 5 · LIMIT			
	gr	fps	gr	fps	gr	fps	gr	fps	gr	fps	psi	Fill
Hodgdon SUPERFORMANCE	36.2	2,670	37.2	2,735	38.2	2,805	39.2	2,870	40.2	2,940	61,700	104%
Winchester StaBALL 6.5	35.3	2,680	36.3	2,745	37.3	2,810	38.2	2,870	39.2	2,940	61,800	104%
Accurate 4350	34.3	2,635	35.3	2,700	36.2	2,765	37.1	2,825	38.1	2,890	59,000	105%
Hodgdon H4350	33.3	2,640	34.2	2,700	35.1	2,760	36.1	2,830	37.0	2,890	62,000	98%
Hodgdon Leverevolution	31.5	2,640	32.4	2,705	33.3	2,765	34.1	2,820	35.0	2,885	61,600	88%
Reload Swiss RS60	33.4	2,630	34.3	2,690	35.3	2,760	36.2	2,825	37.1	2,885	61,800	101%
Accurate 2700	33.6	2,615	34.5	2,675	35.5	2,740	36.4	2,805	37.3	2,865	61,700	100%
Alliant Power Pro 4000-MR	34.8	2,590	35.8	2,655	36.8	2,725	37.7	2,785	38.7	2,855	62,000	104%
IMR 4350	33.4	2,605	34.3	2,665	35.3	2,730	36.2	2,790	37.1	2,855	60,500	105%
Reload Swiss RS70	35.6	2,585	36.6	2,650	37.5	2,710	38.5	2,780	39.5	2,845	59,700	105%
Winchester 760	33.2	2,585	34.1	2,645	35.0	2,705	36.0	2,770	36.9	2,835	61,600	100%
IMR 4007 SSC	32.6	2,565	33.5	2,625	34.4	2,685	35.3	2,750	36.2	2,810	61,700	102%
Ramshot Big Game	32.4	2,570	33.3	2,630	34.2	2,690	35.1	2,750	36.0	2,810	61,900	97%
Shooters World Match Rifle	30.0	2,570	30.8	2,625	31.6	2,680	32.5	2,740	33.3	2,795	62,000	90%
IMR 4064	29.5	2,555	30.3	2,610	31.1	2,665	32.0	2,725	32.8	2,780	61,700	92%
Reload Swiss RS50	31.2	2,540	32.1	2,600	33.0	2,660	33.8	2,710	34.7	2,775	61,900	96%
Alliant Reloder 15	29.5	2,535	30.3	2,590	31.1	2,645	32.0	2,705	32.8	2,760	61,600	92%
Hodgdon Varget	29.2	2,530	30.0	2,585	30.8	2,640	31.6	2,695	32.4	2,755	61,600	89%
Vihtavuori N550	31.1	2,525	32.0	2,585	32.8	2,635	33.6	2,690	34.5	2,745	62,000	95%
Shooters World Precision Rifle	29.4	2,500	30.2	2,555	31.1	2,615	31.9	2,670	32.7	2,725	61,600	96%

6mm ARC

Hornady introduced the 6mm ARC (Advanced Rifle Cartridge) in 2020. It was developed at the request of a specialized group within the U.S. Department of Defense for a multipurpose combat rifle program. It is based on the 6.5 Grendel case necked down to 6mm. The design fits AR-15 magazine length while using long high-ballistic-coefficient .243-inch bullets. It does not share bolts or magazines with the 5.56x45mm NATO. The cartridge is standardized by SAAMI and the C.I.P. The SAAMI standard is set for gas-operated rifles.

Hornady launched the cartridge with three factory loads using 103-, 105- and 108-grain bullets. It offers better long-range ballistics than the 6.5 Grendel while staying within the AR-15's size constraints. It is also chambered in bolt-action rifles such as the CZ 527. Hornady publishes separate load data for gas-operated and bolt-action rifles. The bolt-action data must not be used in AR-15-type rifles. The 6mm ARC is used for long-range shooting and for hunting. The later 22 ARC uses the same parent case.

Cartridge specifications	
Bullet Diameter	**0.243" (6.17 mm)**
Max Case Length	**1.490" (37.85 mm)**
Case Trim Length	**1.480" (37.59 mm)**
Max COAL	**2.260" (57.40 mm)**
Primer Pocket	**Small Rifle**
Standard Twist	**1:8"**
Case Capacity	**34.6 gr H_2O**
Max Pressure	**52,000 psi (SAAMI)**

58 gr Bullet · 25" barrel

COAL: 2.000" • Bullet length: 0.763" • Seat depth: 0.253" • Usable capacity: 31.8 / 34.6 gr H_2O

Powder	STEP 1 · 90%		STEP 2		STEP 3		STEP 4		STEP 5 · LIMIT			
	gr	fps	gr	fps	gr	fps	gr	fps	gr	fps	psi	Fill
Hodgdon CFE BLK	25.8	3,345	26.5	3,415	27.3	3,495	28.0	3,565	28.7	3,635	51,900	93%
Accurate 2460	29.5	3,265	30.3	3,340	31.1	3,415	32.0	3,500	32.8	3,575	51,900	103%
Alliant AR-Comp	28.0	3,265	28.8	3,340	29.6	3,420	30.3	3,485	31.1	3,565	50,400	105%
Ramshot X-Terminator	28.5	3,235	29.3	3,310	30.1	3,385	30.9	3,460	31.7	3,535	51,800	101%
Hodgdon Leverevolution	31.0	3,210	31.9	3,295	32.7	3,370	33.5	3,445	34.4	3,530	51,700	103%
Accurate 2230	28.5	3,220	29.3	3,295	30.1	3,370	30.9	3,440	31.7	3,515	51,700	101%
Vihtavuori N130	25.4	3,220	26.1	3,290	26.8	3,360	27.5	3,430	28.2	3,505	51,700	102%
Hodgdon H335	28.9	3,195	29.7	3,270	30.5	3,345	31.3	3,425	32.1	3,500	51,700	100%
Shooters World AR Plus	27.1	3,195	27.9	3,275	28.6	3,345	29.4	3,420	30.1	3,490	51,800	96%
Ramshot TAC	28.2	3,140	29.0	3,220	29.8	3,295	30.5	3,360	31.3	3,440	49,800	105%
Alliant Reloder 10x	25.6	3,150	26.3	3,220	27.0	3,290	27.7	3,365	28.4	3,435	51,900	101%
Shooters World Tactical Rifle	28.3	3,130	29.1	3,210	29.9	3,285	30.6	3,355	31.4	3,430	51,800	102%
Hodgdon H4895	27.8	3,105	28.6	3,180	29.4	3,260	30.1	3,325	30.9	3,405	51,600	101%
Accurate 2015	26.4	3,110	27.1	3,180	27.9	3,260	28.6	3,330	29.3	3,400	51,800	96%
IMR 4895	29.0	3,100	29.8	3,175	30.6	3,250	31.4	3,325	32.2	3,400	50,800	105%
Accurate LT-32	25.6	3,120	26.3	3,190	27.0	3,260	27.7	3,325	28.4	3,395	51,900	98%
Hodgdon H322	26.4	3,110	27.1	3,175	27.9	3,255	28.6	3,325	29.3	3,395	51,900	98%
Hodgdon Benchmark	27.2	3,095	27.9	3,165	28.7	3,240	29.4	3,305	30.2	3,385	51,500	105%
Hodgdon BL-C(2)	29.9	3,055	30.7	3,135	31.6	3,220	32.4	3,295	33.2	3,375	50,600	105%
IMR 8208 XBR	27.6	3,080	28.4	3,155	29.1	3,220	29.9	3,300	30.7	3,375	49,900	105%

70 gr Bullet · 25" barrel

COAL: 2.070" • Bullet length: 0.845" • Seat depth: 0.265" • Usable capacity: 31.6 / 34.6 gr H_2O

Powder	STEP 1 · 90%		STEP 2		STEP 3		STEP 4		STEP 5 · LIMIT			
	gr	fps	gr	fps	gr	fps	gr	fps	gr	fps	psi	Fill
Hodgdon Leverevolution	29.9	3,020	30.7	3,095	31.6	3,175	32.4	3,245	33.2	3,320	51,700	100%
Hodgdon CFE BLK	24.6	3,040	25.3	3,105	26.0	3,175	26.6	3,230	27.3	3,295	51,600	89%
Vihtavuori N530	27.0	3,015	27.8	3,090	28.5	3,155	29.3	3,230	30.0	3,290	51,600	102%
Alliant AR-Comp	26.8	3,010	27.6	3,085	28.3	3,145	29.1	3,220	29.8	3,285	51,700	101%
Vihtavuori N135	27.5	3,015	28.3	3,090	29.0	3,150	29.8	3,220	30.5	3,285	51,900	105%
Shooters World Match Rifle	29.0	2,990	29.8	3,065	30.6	3,135	31.4	3,210	32.2	3,280	50,500	105%
Accurate 2460	27.9	3,000	28.7	3,070	29.4	3,130	30.2	3,200	31.0	3,270	51,700	98%
Hodgdon H335	27.8	2,980	28.6	3,050	29.4	3,120	30.1	3,185	30.9	3,255	51,800	97%
Ramshot TAC	27.5	2,960	28.3	3,030	29.1	3,105	29.8	3,165	30.6	3,240	51,800	103%
Reload Swiss RS40	25.9	2,965	26.6	3,030	27.4	3,105	28.1	3,170	28.8	3,235	51,800	97%
Ramshot X-Terminator	26.9	2,960	27.6	3,020	28.4	3,090	29.1	3,150	29.9	3,220	51,900	96%
Winchester 748	28.7	2,930	29.5	3,000	30.3	3,075	31.1	3,145	31.9	3,220	51,700	104%
Accurate 2230	26.8	2,935	27.6	3,005	28.3	3,065	29.1	3,135	29.8	3,195	51,800	95%
Reload Swiss RS52	28.4	2,885	29.2	2,955	30.0	3,030	30.8	3,100	31.6	3,175	49,500	105%
Accurate 2495	27.2	2,895	27.9	2,955	28.7	3,030	29.4	3,095	30.2	3,170	51,700	96%
Hodgdon H4895	26.6	2,900	27.4	2,970	28.1	3,035	28.9	3,110	29.6	3,170	51,700	97%
IMR 8208 XBR	26.6	2,900	27.4	2,975	28.1	3,035	28.9	3,110	29.6	3,170	51,800	102%
Shooters World The Patriot	26.1	2,910	26.8	2,975	27.6	3,045	28.3	3,105	29.0	3,170	51,900	95%
Accurate 2015	25.4	2,885	26.1	2,950	26.8	3,015	27.5	3,080	28.2	3,145	51,700	92%
Hodgdon Benchmark	25.8	2,875	26.5	2,935	27.3	3,010	28.0	3,070	28.7	3,135	51,900	100%

80 gr Bullet · 25" barrel

COAL: 2.095" • Bullet length: 1.091" • Seat depth: 0.486" • Usable capacity: 29.1 / 34.6 gr H_2O

Powder	STEP 1 · 90%		STEP 2		STEP 3		STEP 4		STEP 5 · LIMIT			
	gr	fps	gr	fps	gr	fps	gr	fps	gr	fps	psi	Fill
Hodgdon Leverevolution	27.6	2,790	28.4	2,865	29.1	2,925	29.9	3,000	30.7	3,070	51,700	101%
Vihtavuori N530	24.8	2,785	25.5	2,850	26.1	2,905	26.8	2,970	27.5	3,035	51,700	101%
Shooters World Match Rifle	26.7	2,755	27.4	2,820	28.2	2,890	28.9	2,955	29.7	3,030	50,300	105%
Vihtavuori N135	25.2	2,760	25.9	2,825	26.6	2,885	27.3	2,950	28.0	3,010	52,000	104%
Hodgdon CFE BLK	22.6	2,765	23.2	2,825	23.9	2,890	24.5	2,950	25.1	3,005	51,500	89%
Alliant AR-Comp	24.6	2,755	25.3	2,815	26.0	2,880	26.6	2,935	27.3	3,000	51,600	100%
Alliant Power Pro Varmint	25.9	2,730	26.6	2,795	27.4	2,865	28.1	2,930	28.8	2,995	51,800	104%
Hodgdon H335	25.7	2,745	26.4	2,805	27.1	2,870	27.8	2,935	28.5	2,995	51,600	97%
Ramshot TAC	25.5	2,730	26.2	2,795	26.9	2,860	27.6	2,920	28.3	2,985	52,000	103%
Winchester 748	26.6	2,720	27.3	2,785	28.1	2,855	28.8	2,920	29.5	2,985	51,800	104%
Shooters World AR Plus	24.0	2,710	24.7	2,775	25.4	2,835	26.0	2,895	26.7	2,960	52,000	93%
Shooters World Tactical Rifle	25.0	2,695	25.7	2,760	26.4	2,825	27.1	2,890	27.8	2,955	51,600	98%
Ramshot X-Terminator	24.6	2,700	25.3	2,760	26.0	2,820	26.6	2,875	27.3	2,935	51,500	95%
Hodgdon H4895	24.6	2,680	25.3	2,745	26.0	2,805	26.6	2,860	27.3	2,925	51,900	97%
Accurate 2230	24.6	2,685	25.3	2,745	26.0	2,805	26.6	2,860	27.3	2,920	51,900	95%
IMR 4064	25.5	2,665	26.2	2,725	26.9	2,785	27.6	2,850	28.3	2,910	51,700	104%
IMR 8208 XBR	24.4	2,665	25.1	2,730	25.8	2,795	26.4	2,850	27.1	2,910	51,700	101%
Shooters World The Creed	26.5	2,645	27.2	2,710	27.9	2,770	28.7	2,845	29.4	2,905	51,400	105%
Shooters World The Patriot	23.9	2,655	24.6	2,715	25.3	2,780	25.9	2,835	26.6	2,895	51,700	95%
Hodgdon Benchmark	23.6	2,630	24.3	2,695	24.9	2,750	25.6	2,815	26.2	2,870	51,600	99%

85 gr Bullet · 25" barrel

COAL: 2.050" • Bullet length: 0.934" • Seat depth: 0.374" • Usable capacity: 30.5 / 34.6 gr H_2O

Powder	STEP 1 · 90%		STEP 2		STEP 3		STEP 4		STEP 5 · LIMIT			
	gr	fps	gr	fps	gr	fps	gr	fps	gr	fps	psi	Fill
Accurate 2520	27.9	2,790	28.7	2,860	29.4	2,915	30.2	2,985	31.0	3,055	51,300	105%
Hodgdon Leverevolution	28.1	2,775	28.9	2,845	29.6	2,905	30.4	2,970	31.2	3,040	51,900	98%
Shooters World Match Rifle	27.5	2,765	28.3	2,830	29.0	2,895	29.8	2,965	30.5	3,025	51,600	103%
Hodgdon CFE 223	28.2	2,735	29.0	2,800	29.8	2,870	30.5	2,930	31.3	3,000	51,800	105%
Reload Swiss RS52	27.2	2,700	27.9	2,760	28.7	2,830	29.4	2,890	30.2	2,965	51,700	104%
Vihtavuori N530	24.7	2,720	25.4	2,785	26.0	2,835	26.7	2,895	27.4	2,960	51,600	97%
Hodgdon BL-C(2)	27.5	2,695	28.3	2,765	29.0	2,825	29.8	2,895	30.5	2,955	51,700	100%
Winchester 748	27.0	2,695	27.8	2,765	28.5	2,825	29.3	2,895	30.0	2,955	51,900	101%
Alliant Power Pro Varmint	26.3	2,700	27.0	2,760	27.8	2,830	28.5	2,890	29.2	2,950	51,700	101%
Hodgdon H335	26.0	2,700	26.7	2,760	27.4	2,820	28.2	2,890	28.9	2,950	51,700	94%
Ramshot TAC	25.8	2,690	26.5	2,750	27.3	2,820	28.0	2,880	28.7	2,940	51,900	100%
Alliant AR-Comp	24.8	2,695	25.5	2,755	26.1	2,805	26.8	2,870	27.5	2,930	52,000	97%
Vihtavuori N135	25.2	2,695	25.9	2,755	26.6	2,815	27.3	2,875	28.0	2,930	51,900	100%
Vihtavuori N540	26.7	2,685	27.4	2,740	28.2	2,805	28.9	2,865	29.7	2,930	51,900	104%
Accurate 2460	25.7	2,685	26.4	2,745	27.1	2,800	27.8	2,860	28.5	2,920	51,600	94%
Shooters World Tactical Rifle	25.4	2,670	26.1	2,730	26.8	2,795	27.5	2,855	28.2	2,915	51,700	95%
Shooters World The Creed	26.9	2,630	27.6	2,690	28.4	2,760	29.1	2,820	29.9	2,890	51,700	102%
IMR 4320	26.4	2,625	27.1	2,685	27.9	2,755	28.6	2,815	29.3	2,875	51,700	97%
IMR 8208 XBR	24.6	2,625	25.3	2,685	26.0	2,745	26.6	2,800	27.3	2,860	51,700	97%
Hodgdon Benchmark	23.8	2,590	24.4	2,640	25.1	2,700	25.8	2,765	26.4	2,815	51,900	95%

90 gr Bullet · 25" barrel

COAL: 2.140" • Bullet length: 1.106" • Seat depth: 0.456" • Usable capacity: 29.5 / 34.6 gr H_2O

Powder	STEP 1 · 90%		STEP 2		STEP 3		STEP 4		STEP 5 · LIMIT			
	gr	fps	gr	fps	gr	fps	gr	fps	gr	fps	psi	Fill
Accurate 2520	27.0	2,700	27.8	2,765	28.5	2,825	29.3	2,890	30.0	2,950	51,300	105%
Hodgdon Leverevolution	27.2	2,690	27.9	2,745	28.7	2,815	29.4	2,875	30.2	2,945	51,800	98%
Shooters World Match Rifle	26.6	2,675	27.4	2,745	28.1	2,805	28.9	2,875	29.6	2,935	52,000	103%
Hodgdon CFE 223	27.3	2,650	28.1	2,715	28.8	2,775	29.6	2,845	30.3	2,905	51,800	105%
Hodgdon BL-C(2)	26.6	2,610	27.4	2,675	28.1	2,735	28.9	2,805	29.6	2,865	52,000	101%
Reload Swiss RS52	26.3	2,615	27.0	2,675	27.8	2,745	28.5	2,805	29.2	2,865	51,600	104%
Winchester 748	26.1	2,610	26.8	2,670	27.6	2,740	28.3	2,800	29.0	2,860	51,800	101%
Hodgdon H335	25.2	2,615	25.9	2,675	26.6	2,735	27.3	2,795	28.0	2,855	51,900	94%
Vihtavuori N530	23.8	2,625	24.4	2,680	25.1	2,740	25.8	2,805	26.4	2,855	51,600	96%
Alliant Power Pro Varmint	25.4	2,610	26.1	2,670	26.8	2,730	27.5	2,790	28.2	2,850	51,600	101%
Norma 202	25.2	2,605	25.9	2,665	26.6	2,725	27.3	2,785	28.0	2,845	51,800	103%
Ramshot TAC	24.9	2,595	25.6	2,655	26.3	2,715	27.0	2,775	27.7	2,835	51,600	100%
Vihtavuori N540	25.7	2,585	26.4	2,645	27.1	2,700	27.9	2,770	28.6	2,825	51,600	103%
Accurate 2460	24.8	2,590	25.5	2,650	26.1	2,700	26.8	2,755	27.5	2,815	51,700	93%
Alliant TS 15.5	25.7	2,560	26.4	2,620	27.1	2,680	27.9	2,750	28.6	2,815	51,700	105%
Reload Swiss RS50	26.5	2,550	27.2	2,610	27.9	2,665	28.7	2,735	29.4	2,795	50,500	105%
Hodgdon H4895	23.9	2,540	24.6	2,605	25.3	2,665	25.9	2,715	26.6	2,775	51,700	93%
IMR 8208 XBR	23.8	2,540	24.4	2,595	25.1	2,655	25.8	2,715	26.4	2,765	52,000	97%
Ramshot X-Terminator	23.8	2,540	24.4	2,590	25.1	2,650	25.8	2,705	26.4	2,755	51,700	91%
Hodgdon Benchmark	22.9	2,495	23.5	2,545	24.1	2,600	24.8	2,660	25.4	2,710	51,600	95%

95 gr Bullet · 25" barrel

COAL: 2.180" • Bullet length: 1.160" • Seat depth: 0.470" • Usable capacity: 29.4 / 34.6 gr H_2O

Powder	STEP 1 · 90%		STEP 2		STEP 3		STEP 4		STEP 5 · LIMIT			
	gr	fps	gr	fps	gr	fps	gr	fps	gr	fps	psi	Fill
Accurate 2520	26.6	2,620	27.4	2,685	28.1	2,745	28.9	2,810	29.6	2,870	51,800	104%
Hodgdon Leverevolution	26.7	2,605	27.4	2,665	28.2	2,730	28.9	2,790	29.7	2,860	51,700	97%
Shooters World Match Rifle	26.2	2,600	26.9	2,660	27.6	2,720	28.4	2,790	29.1	2,850	51,700	102%
Alliant Reloder 15	26.0	2,575	26.7	2,635	27.4	2,690	28.2	2,760	28.9	2,820	50,600	105%
Hodgdon CFE 223	26.8	2,570	27.6	2,635	28.3	2,690	29.1	2,760	29.8	2,820	51,600	103%
Reload Swiss RS52	25.9	2,545	26.6	2,605	27.4	2,670	28.1	2,730	28.8	2,790	51,600	103%
Hodgdon BL-C(2)	26.2	2,535	26.9	2,595	27.6	2,655	28.4	2,725	29.1	2,785	51,500	99%
Alliant Power Pro Varmint	25.0	2,530	25.7	2,590	26.4	2,650	27.1	2,710	27.8	2,770	51,900	100%
Ramshot TAC	24.6	2,520	25.3	2,580	26.0	2,640	26.6	2,695	27.3	2,755	51,700	99%
Norma 202	24.7	2,520	25.4	2,575	26.0	2,625	26.7	2,685	27.4	2,745	51,700	101%
Reload Swiss RS50	26.3	2,495	27.0	2,550	27.8	2,620	28.5	2,675	29.2	2,735	51,600	104%
Vihtavuori N540	25.2	2,505	25.9	2,560	26.6	2,620	27.3	2,675	28.0	2,735	52,000	101%
Hodgdon Varget	24.8	2,500	25.5	2,560	26.1	2,610	26.8	2,670	27.5	2,730	51,700	97%
Accurate 2460	24.2	2,490	24.9	2,550	25.5	2,600	26.2	2,655	26.9	2,715	51,600	92%
Alliant AR-Comp	23.3	2,490	23.9	2,545	24.6	2,605	25.3	2,665	25.9	2,715	51,700	94%
IMR 4320	25.2	2,475	25.9	2,535	26.6	2,595	27.3	2,655	28.0	2,715	51,800	96%
Vihtavuori N140	24.9	2,475	25.6	2,535	26.3	2,590	27.0	2,650	27.7	2,710	51,900	96%
IMR 4064	24.2	2,455	24.9	2,515	25.5	2,565	26.2	2,625	26.9	2,685	51,600	98%
Accurate 2700	27.3	2,435	28.1	2,500	28.8	2,555	29.6	2,625	30.3	2,680	50,000	105%
IMR 8208 XBR	23.2	2,445	23.9	2,505	24.5	2,555	25.1	2,610	25.8	2,670	51,800	95%

100 gr Bullet · 25" barrel

COAL: 2.080" • Bullet length: 1.079" • Seat depth: 0.489" • Usable capacity: 29.2 / 34.6 gr H_2O

Powder	STEP 1 · 90%		STEP 2		STEP 3		STEP 4		STEP 5 · LIMIT			
	gr	fps	gr	fps	gr	fps	gr	fps	gr	fps	psi	Fill
Hodgdon Leverevolution	26.3	2,545	27.0	2,605	27.8	2,670	28.5	2,730	29.2	2,790	51,700	96%
Accurate 2520	26.1	2,550	26.8	2,605	27.6	2,670	28.3	2,730	29.0	2,785	51,600	102%
Shooters World Match Rifle	25.7	2,530	26.4	2,590	27.1	2,650	27.9	2,715	28.6	2,775	51,500	101%
Alliant Reloder 15	25.7	2,525	26.4	2,585	27.1	2,640	27.8	2,700	28.5	2,755	51,600	104%
Hodgdon CFE 223	26.4	2,510	27.1	2,565	27.9	2,630	28.6	2,690	29.3	2,750	51,600	102%
Reload Swiss RS52	25.6	2,495	26.3	2,555	27.0	2,610	27.7	2,670	28.4	2,730	52,000	102%
Hodgdon BL-C(2)	25.8	2,480	26.5	2,535	27.3	2,605	28.0	2,665	28.7	2,720	51,800	99%
Alliant Power Pro Varmint	24.6	2,465	25.3	2,525	26.0	2,585	26.6	2,635	27.3	2,695	51,900	99%
Ramshot TAC	24.1	2,450	24.8	2,510	25.5	2,565	26.1	2,620	26.8	2,675	51,600	98%
Shooters World Tactical Rifle	23.7	2,440	24.4	2,500	25.0	2,550	25.6	2,600	26.3	2,660	51,700	93%
Shooters World The Creed	25.2	2,430	25.9	2,485	26.6	2,545	27.3	2,605	28.0	2,660	51,900	100%
IMR 4320	24.8	2,420	25.5	2,475	26.2	2,535	26.9	2,595	27.6	2,655	52,000	95%
Vihtavuori N540	24.6	2,430	25.3	2,485	26.0	2,540	26.6	2,590	27.3	2,645	51,800	99%
Accurate 2700	27.0	2,395	27.8	2,460	28.5	2,515	29.3	2,580	30.0	2,640	50,700	105%
Vihtavuori N135	23.1	2,415	23.8	2,475	24.4	2,525	25.1	2,585	25.7	2,635	51,700	96%
Accurate 2460	23.7	2,415	24.4	2,475	25.0	2,520	25.6	2,570	26.3	2,630	51,600	90%
Alliant AR-Comp	22.8	2,415	23.4	2,465	24.1	2,525	24.7	2,575	25.3	2,625	51,500	93%
Hodgdon H414	27.0	2,380	27.8	2,445	28.5	2,505	29.3	2,570	30.0	2,625	50,600	105%
Hodgdon H4895	23.0	2,390	23.6	2,445	24.3	2,500	25.0	2,560	25.6	2,610	51,800	91%
IMR 8208 XBR	22.8	2,385	23.4	2,435	24.1	2,495	24.7	2,545	25.3	2,595	52,000	94%

105 gr Bullet · 25" barrel

COAL: 2.200" • Bullet length: 1.238" • Seat depth: 0.528" • Usable capacity: 28.7 / 34.6 gr H_2O

Powder	STEP 1 · 90%		STEP 2		STEP 3		STEP 4		STEP 5 · LIMIT			
	gr	fps	gr	fps	gr	fps	gr	fps	gr	fps	psi	Fill
Hodgdon Leverevolution	25.7	2,475	26.4	2,535	27.1	2,590	27.9	2,660	28.6	2,715	51,700	95%
Accurate 2520	25.6	2,485	26.3	2,540	27.0	2,595	27.7	2,655	28.4	2,710	51,800	102%
Shooters World Match Rifle	25.3	2,475	26.0	2,535	26.7	2,590	27.4	2,650	28.1	2,710	51,900	101%
Alliant Reloder 15	25.0	2,450	25.7	2,505	26.4	2,565	27.1	2,620	27.8	2,680	51,600	103%
Hodgdon CFE 223	25.8	2,440	26.5	2,495	27.3	2,560	28.0	2,620	28.7	2,675	51,600	102%
Reload Swiss RS52	25.0	2,425	25.7	2,485	26.4	2,540	27.1	2,600	27.8	2,660	51,800	102%
Hodgdon BL-C(2)	25.3	2,420	26.0	2,475	26.7	2,535	27.4	2,590	28.1	2,650	51,600	98%
Winchester 748	24.8	2,420	25.5	2,475	26.1	2,525	26.8	2,585	27.5	2,645	51,700	98%
Hodgdon H4350	26.9	2,395	27.6	2,450	28.4	2,515	29.1	2,570	29.9	2,640	51,200	105%
Ramshot Big Game	26.6	2,390	27.4	2,455	28.1	2,510	28.9	2,575	29.6	2,630	50,100	105%
Alliant Power Pro Varmint	24.0	2,395	24.7	2,450	25.4	2,510	26.0	2,560	26.7	2,615	51,900	98%
Ramshot TAC	23.7	2,390	24.4	2,450	25.0	2,500	25.6	2,550	26.3	2,610	51,900	97%
Accurate 4064	24.4	2,380	25.1	2,435	25.8	2,495	26.4	2,545	27.1	2,605	51,900	105%
Shooters World The Creed	24.7	2,370	25.4	2,430	26.0	2,480	26.7	2,535	27.4	2,595	51,900	99%
Hodgdon Varget	23.8	2,375	24.4	2,425	25.1	2,480	25.8	2,540	26.4	2,590	51,700	96%
IMR 4895	23.5	2,360	24.1	2,410	24.8	2,470	25.5	2,530	26.1	2,575	51,600	94%
Alliant Reloder 17	25.8	2,320	26.5	2,380	27.3	2,445	28.0	2,505	28.7	2,565	51,900	100%
Vihtavuori N540	23.9	2,350	24.6	2,405	25.3	2,460	25.9	2,510	26.6	2,565	51,800	98%
Hodgdon H4895	22.5	2,325	23.1	2,375	23.8	2,435	24.4	2,485	25.0	2,535	51,800	90%
IMR 8208 XBR	22.1	2,300	22.7	2,350	23.4	2,410	24.0	2,460	24.6	2,510	51,600	93%

110 gr Bullet · 25" barrel

COAL: 2.245" • Bullet length: 1.326" • Seat depth: 0.571" • Usable capacity: 28.2 / 34.6 gr H_2O

Powder	STEP 1 · 90%		STEP 2		STEP 3		STEP 4		STEP 5 · LIMIT			
	gr	fps	gr	fps	gr	fps	gr	fps	gr	fps	psi	Fill
Hodgdon Leverevolution	25.2	2,415	25.9	2,470	26.6	2,530	27.3	2,585	28.0	2,645	51,900	95%
Shooters World Match Rifle	24.8	2,410	25.5	2,470	26.1	2,520	26.8	2,580	27.5	2,635	52,000	100%
Accurate 2520	24.9	2,400	25.6	2,460	26.3	2,515	27.0	2,570	27.7	2,630	51,600	101%
Hodgdon CFE 223	25.3	2,380	26.0	2,435	26.7	2,490	27.4	2,550	28.1	2,605	51,800	101%
Alliant Reloder 15	24.4	2,380	25.1	2,435	25.8	2,495	26.4	2,540	27.1	2,600	51,600	102%
Reload Swiss RS52	24.5	2,365	25.2	2,420	25.9	2,480	26.5	2,530	27.2	2,590	51,900	101%
Hodgdon H4350	26.4	2,345	27.1	2,400	27.9	2,465	28.6	2,525	29.3	2,580	51,600	105%
Ramshot Big Game	26.2	2,345	26.9	2,400	27.6	2,455	28.4	2,520	29.1	2,575	50,600	105%
Alliant Power Pro Varmint	23.5	2,330	24.1	2,375	24.8	2,435	25.5	2,495	26.1	2,540	52,000	98%
Hodgdon H335	23.2	2,320	23.9	2,375	24.5	2,425	25.1	2,475	25.8	2,530	51,600	90%
Ramshot TAC	23.1	2,315	23.8	2,375	24.4	2,425	25.1	2,480	25.7	2,530	51,800	97%
Reload Swiss RS50	24.8	2,305	25.5	2,360	26.2	2,420	26.9	2,475	27.6	2,530	51,900	103%
Hodgdon Varget	23.2	2,305	23.9	2,360	24.5	2,410	25.1	2,460	25.8	2,520	51,800	95%
Shooters World The Creed	24.0	2,295	24.7	2,355	25.4	2,410	26.0	2,460	26.7	2,515	51,600	98%
Alliant Reloder 17	25.3	2,270	26.0	2,330	26.7	2,385	27.4	2,445	28.1	2,505	51,800	100%
Norma 202	23.0	2,300	23.6	2,350	24.3	2,405	24.9	2,455	25.5	2,505	51,900	98%
Vihtavuori N540	23.3	2,280	23.9	2,325	24.6	2,380	25.3	2,435	25.9	2,485	51,900	97%
Vihtavuori N140	23.2	2,270	23.9	2,325	24.5	2,375	25.1	2,425	25.8	2,480	51,700	93%
Hodgdon H4895	22.0	2,260	22.6	2,310	23.2	2,360	23.8	2,410	24.4	2,460	51,800	89%
IMR 8208 XBR	21.6	2,235	22.2	2,285	22.8	2,335	23.4	2,385	24.0	2,435	51,800	92%

6mm BR

The 6mm BR grew out of early-1960s wildcat experiments with the .308 x 1.5-inch Barnes case. That case is itself a shortened .308 Winchester. In 1978 Remington began offering its 40-X rifle in the cartridge. Remington named it the 6mm Bench Rest Remington. In the mid-1990s Norma introduced its own version called the 6mm BR Norma. C.I.P. has listed it since December 1995. It has a longer throat that allows long very-low-drag (VLD) bullets to be seated farther out. The longer throat also permits heavier bullets than the Remington specification. Both versions use small rifle primers.

The cartridge is widely used in benchrest competition. It has been used to set records in 600- and 1,000-yard benchrest shooting. The Norma version also became popular in 300-meter ISSF and CISM matches and other 300-meter rifle disciplines. Its short and wide powder column, moderate recoil and consistent performance have made it a common choice for target shooters. Factory ammunition is available in a range of bullet weights. Norma and Lapua both produce brass for it.

Cartridge specifications	
Bullet Diameter	**0.243" (6.17 mm)**
Max Case Length	**1.560" (39.62 mm)**
Case Trim Length	**1.550" (39.37 mm)**
Max COAL	**2.200" (55.88 mm)**
Primer Pocket	**Small Rifle**
Standard Twist	**1:8"**
Case Capacity	**37.3 gr H_2O**
Max Pressure	**4,050 bar / 58,740 psi (C.I.P.)**

55 gr Bullet · 25" barrel

COAL: 2.150" • Bullet length: 0.849" • Seat depth: 0.259" • Usable capacity: 34.6 / 37.3 gr H_2O

Powder	STEP 1 · 90%		STEP 2		STEP 3		STEP 4		STEP 5 · LIMIT			
	gr	fps	gr	fps	gr	fps	gr	fps	gr	fps	psi	Fill
Hodgdon CFE BLK	28.0	3,535	28.8	3,615	29.6	3,690	30.3	3,760	31.1	3,835	58,600	92%
Alliant AR-Comp	30.5	3,465	31.4	3,545	32.2	3,620	33.0	3,695	33.9	3,780	57,900	105%
Hodgdon Leverevolution	33.8	3,420	34.7	3,500	35.6	3,585	36.6	3,675	37.5	3,760	58,400	104%
Accurate 2460	31.5	3,410	32.4	3,490	33.3	3,570	34.1	3,645	35.0	3,725	58,700	101%
Accurate 2230	30.9	3,405	31.8	3,485	32.6	3,555	33.4	3,630	34.3	3,710	58,600	100%
Vihtavuori N130	27.6	3,410	28.4	3,485	29.1	3,555	29.9	3,630	30.7	3,710	58,500	102%
Reload Swiss RS40	29.3	3,390	30.1	3,470	31.0	3,555	31.8	3,630	32.6	3,705	58,600	100%
Vihtavuori N530	30.4	3,365	31.3	3,450	32.1	3,530	32.9	3,605	33.8	3,690	55,400	105%
Ramshot X-Terminator	30.3	3,365	31.2	3,445	32.0	3,520	32.9	3,600	33.7	3,670	58,400	99%
Hodgdon H4895	30.8	3,345	31.7	3,430	32.5	3,505	33.4	3,590	34.2	3,665	58,500	102%
Shooters World The Patriot	29.7	3,350	30.5	3,420	31.4	3,505	32.2	3,580	33.0	3,650	58,600	99%
Alliant Power Pro Varmint	31.0	3,295	31.9	3,380	32.7	3,455	33.5	3,525	34.4	3,610	57,800	105%
Accurate 2495	30.9	3,280	31.8	3,365	32.6	3,440	33.4	3,515	34.3	3,600	58,400	100%
Accurate LT-32	27.8	3,305	28.6	3,380	29.4	3,455	30.1	3,525	30.9	3,600	58,400	98%
Accurate 2015	28.6	3,295	29.4	3,370	30.2	3,445	31.0	3,520	31.8	3,595	58,500	95%
IMR 4198	25.6	3,300	26.3	3,365	27.0	3,435	27.7	3,505	28.4	3,570	58,500	99%
Hodgdon H322	28.4	3,265	29.2	3,345	29.9	3,410	30.7	3,485	31.5	3,560	58,400	97%
Shooters World Tactical Rifle	30.0	3,250	30.8	3,325	31.6	3,400	32.5	3,485	33.3	3,560	58,400	99%
Hodgdon Varget	31.4	3,215	32.3	3,300	33.1	3,375	34.0	3,460	34.9	3,545	56,900	105%
Hodgdon H335	29.7	3,235	30.5	3,305	31.4	3,390	32.2	3,465	33.0	3,535	58,700	94%

60 gr Bullet · 25" barrel

COAL: 2.080" • Bullet length: 0.772" • Seat depth: 0.252" • Usable capacity: 34.5 / 37.3 gr H_2O

Powder	STEP 1 · 90%		STEP 2		STEP 3		STEP 4		STEP 5 · LIMIT			
	gr	fps	gr	fps	gr	fps	gr	fps	gr	fps	psi	Fill
Hodgdon CFE BLK	27.4	3,380	28.1	3,445	28.9	3,520	29.6	3,585	30.4	3,660	58,500	91%
Hodgdon Leverevolution	33.2	3,320	34.1	3,400	35.0	3,480	36.0	3,570	36.9	3,650	58,600	102%
Alliant AR-Comp	29.9	3,335	30.7	3,405	31.6	3,485	32.4	3,560	33.2	3,630	58,400	103%
Vihtavuori N530	30.2	3,315	31.1	3,395	31.9	3,470	32.8	3,555	33.6	3,630	58,700	105%
Accurate 2460	30.6	3,270	31.5	3,345	32.3	3,415	33.1	3,485	34.0	3,565	58,300	99%
IMR 4895	31.5	3,245	32.4	3,325	33.3	3,405	34.1	3,480	35.0	3,560	57,800	105%
Reload Swiss RS40	28.7	3,265	29.5	3,340	30.3	3,415	31.1	3,485	31.9	3,560	58,300	98%
Vihtavuori N135	30.0	3,270	30.8	3,340	31.6	3,410	32.5	3,490	33.3	3,560	55,700	105%
Accurate 2230	30.0	3,255	30.8	3,325	31.6	3,395	32.5	3,475	33.3	3,545	58,600	98%
Hodgdon H4895	30.2	3,240	31.0	3,310	31.9	3,395	32.7	3,465	33.5	3,540	58,400	101%
Hodgdon Benchmark	29.5	3,225	30.3	3,295	31.1	3,370	32.0	3,450	32.8	3,520	55,400	105%
IMR 8208 XBR	30.0	3,215	30.8	3,290	31.6	3,360	32.5	3,440	33.3	3,515	57,000	105%
Ramshot X-Terminator	29.5	3,230	30.3	3,295	31.1	3,365	32.0	3,445	32.8	3,515	58,700	96%
Alliant Power Pro Varmint	30.5	3,200	31.4	3,280	32.2	3,350	33.0	3,420	33.9	3,505	58,300	104%
Shooters World The Patriot	29.1	3,220	29.9	3,290	30.7	3,365	31.5	3,435	32.3	3,505	58,700	97%
Vihtavuori N133	28.4	3,215	29.2	3,285	29.9	3,350	30.7	3,425	31.5	3,495	56,300	105%
Hodgdon Varget	31.1	3,160	32.0	3,245	32.9	3,325	33.7	3,400	34.6	3,485	58,400	104%
Accurate LT-32	27.3	3,180	28.1	3,255	28.8	3,320	29.6	3,395	30.3	3,460	58,400	97%
Reload Swiss RS52	31.0	3,115	31.9	3,195	32.7	3,265	33.5	3,340	34.4	3,425	57,000	105%
Hodgdon H335	29.1	3,120	29.9	3,195	30.7	3,265	31.5	3,335	32.3	3,405	58,400	93%

70 gr Bullet · 25" barrel

COAL: 2.150" • Bullet length: 0.904" • Seat depth: 0.314" • Usable capacity: 33.8 / 37.3 gr H_2O

Powder	STEP 1 · 90%		STEP 2		STEP 3		STEP 4		STEP 5 · LIMIT			
	gr	fps	gr	fps	gr	fps	gr	fps	gr	fps	psi	Fill
Hodgdon Leverevolution	31.9	3,135	32.8	3,210	33.6	3,280	34.5	3,360	35.4	3,435	58,400	100%
Accurate 2520	31.0	3,110	31.9	3,185	32.7	3,250	33.5	3,320	34.4	3,395	58,300	105%
Vihtavuori N530	28.4	3,090	29.2	3,160	30.0	3,230	30.8	3,300	31.6	3,375	58,600	100%
Hodgdon CFE BLK	26.0	3,100	26.7	3,165	27.4	3,230	28.2	3,305	28.9	3,365	58,500	88%
IMR 4895	30.2	3,065	31.1	3,145	31.9	3,210	32.8	3,290	33.6	3,360	58,700	103%
Alliant AR-Comp	28.4	3,090	29.2	3,155	29.9	3,215	30.7	3,285	31.5	3,355	58,700	100%
Vihtavuori N135	28.9	3,080	29.7	3,145	30.5	3,215	31.3	3,280	32.1	3,350	58,500	103%
Hodgdon Benchmark	28.6	3,060	29.4	3,130	30.2	3,200	31.0	3,270	31.8	3,340	58,700	104%
Ramshot TAC	29.2	3,045	30.0	3,115	30.8	3,185	31.6	3,255	32.4	3,325	58,700	102%
Winchester 748	30.5	3,030	31.4	3,105	32.2	3,175	33.0	3,245	33.9	3,325	58,400	103%
Hodgdon H4895	28.8	3,035	29.6	3,105	30.4	3,175	31.2	3,245	32.0	3,315	58,500	98%
Hodgdon Varget	29.9	3,010	30.7	3,080	31.6	3,160	32.4	3,230	33.2	3,300	58,600	102%
Shooters World AR Plus	27.5	3,025	28.3	3,095	29.1	3,165	29.8	3,230	30.6	3,300	58,500	92%
Accurate 2495	29.1	3,000	29.9	3,075	30.7	3,145	31.5	3,215	32.3	3,285	58,300	96%
Vihtavuori N133	27.3	3,015	28.1	3,085	28.8	3,145	29.6	3,215	30.3	3,275	58,300	103%
Reload Swiss RS52	30.1	2,980	30.9	3,050	31.8	3,130	32.6	3,195	33.4	3,270	58,700	104%
Accurate 2230	28.2	2,995	29.0	3,060	29.8	3,130	30.5	3,185	31.3	3,255	58,400	94%
IMR 4166	28.7	2,950	29.5	3,020	30.3	3,090	31.1	3,160	31.9	3,235	56,800	105%
Ramshot X-Terminator	27.8	2,975	28.6	3,045	29.4	3,110	30.1	3,170	30.9	3,235	58,500	93%
Hodgdon H335	27.8	2,920	28.6	2,985	29.4	3,055	30.1	3,115	30.9	3,185	58,400	90%

75 gr Bullet · 25" barrel

COAL: 2.115" • Bullet length: 0.815" • Seat depth: 0.260" • Usable capacity: 34.4 / 37.3 gr H_2O

Powder	STEP 1 · 90%		STEP 2		STEP 3		STEP 4		STEP 5 · LIMIT			
	gr	fps	gr	fps	gr	fps	gr	fps	gr	fps	psi	Fill
Hodgdon Leverevolution	31.8	3,070	32.7	3,145	33.5	3,210	34.4	3,285	35.3	3,365	58,300	98%
Accurate 2520	30.9	3,040	31.8	3,110	32.6	3,175	33.4	3,245	34.3	3,315	58,700	103%
Hodgdon CFE 223	31.9	3,025	32.8	3,100	33.6	3,165	34.5	3,240	35.4	3,315	58,500	105%
Vihtavuori N140	30.6	2,990	31.5	3,060	32.3	3,130	33.1	3,195	34.0	3,270	58,600	101%
Vihtavuori N530	28.0	3,005	28.8	3,075	29.6	3,140	30.3	3,200	31.1	3,270	58,700	97%
Winchester 748	30.5	2,980	31.4	3,055	32.2	3,120	33.0	3,190	33.9	3,265	58,700	101%
Hodgdon BL-C(2)	31.0	2,975	31.9	3,050	32.7	3,115	33.5	3,185	34.4	3,260	58,400	100%
Alliant Reloder 15	30.4	2,970	31.3	3,045	32.1	3,110	32.9	3,175	33.8	3,250	56,000	105%
Norma 202	29.5	2,980	30.3	3,045	31.1	3,110	32.0	3,185	32.8	3,250	58,400	103%
Hodgdon Benchmark	28.4	2,985	29.2	3,050	29.9	3,110	30.7	3,180	31.5	3,245	58,600	101%
Vihtavuori N135	28.5	2,980	29.3	3,045	30.1	3,110	30.9	3,180	31.7	3,245	58,700	100%
Hodgdon Varget	29.8	2,955	30.6	3,020	31.5	3,100	32.3	3,165	33.1	3,235	58,700	100%
Hodgdon H4895	28.6	2,960	29.4	3,025	30.2	3,095	31.0	3,160	31.8	3,230	58,400	96%
Shooters World Match Rifle	29.8	2,950	30.6	3,015	31.5	3,090	32.3	3,160	33.1	3,225	58,600	99%
Accurate 2495	29.1	2,950	29.9	3,015	30.7	3,085	31.5	3,155	32.3	3,220	58,700	95%
Accurate 2460	28.6	2,935	29.4	3,000	30.2	3,065	31.0	3,130	31.8	3,195	58,300	93%
Reload Swiss RS50	30.9	2,910	31.8	2,985	32.6	3,050	33.4	3,115	34.3	3,190	57,300	105%
Shooters World The Creed	30.4	2,900	31.3	2,975	32.1	3,040	32.9	3,110	33.8	3,185	58,300	102%
Shooters World Tactical Rifle	28.0	2,890	28.8	2,960	29.6	3,025	30.3	3,085	31.1	3,155	58,400	93%
Hodgdon H335	27.7	2,850	28.5	2,915	29.3	2,985	30.0	3,040	30.8	3,110	58,700	89%

80 gr Bullet · 25" barrel

COAL: 2.170" • Bullet length: 0.953" • Seat depth: 0.343" • Usable capacity: 33.5 / 37.3 gr H_2O

Powder	STEP 1 · 90%		STEP 2		STEP 3		STEP 4		STEP 5 · LIMIT			
	gr	fps	gr	fps	gr	fps	gr	fps	gr	fps	psi	Fill
Hodgdon Leverevolution	30.9	2,970	31.8	3,040	32.6	3,110	33.4	3,175	34.3	3,250	58,600	98%
Hodgdon CFE 223	30.9	2,915	31.8	2,990	32.6	3,055	33.4	3,120	34.3	3,195	58,400	104%
Accurate 2520	29.9	2,925	30.7	2,985	31.6	3,060	32.4	3,125	33.2	3,190	58,600	102%
Alliant Reloder 15	29.6	2,885	30.4	2,950	31.3	3,020	32.1	3,090	32.9	3,155	57,200	105%
IMR 4895	29.0	2,885	29.8	2,950	30.6	3,020	31.4	3,085	32.2	3,155	58,400	99%
Vihtavuori N140	29.6	2,880	30.4	2,945	31.3	3,020	32.1	3,085	32.9	3,155	58,700	100%
Hodgdon BL-C(2)	30.1	2,875	30.9	2,940	31.8	3,015	32.6	3,085	33.4	3,150	58,400	100%
Norma 202	28.5	2,865	29.3	2,930	30.1	2,995	30.9	3,060	31.7	3,125	58,600	103%
Hodgdon Benchmark	27.4	2,865	28.1	2,925	28.9	2,990	29.6	3,050	30.4	3,120	58,700	100%
Hodgdon Varget	28.8	2,845	29.6	2,915	30.4	2,980	31.2	3,050	32.0	3,120	58,500	99%
Shooters World Match Rifle	28.9	2,845	29.7	2,910	30.5	2,980	31.3	3,045	32.1	3,115	58,600	99%
Hodgdon H4895	27.7	2,850	28.5	2,915	29.3	2,985	30.0	3,045	30.8	3,110	58,700	95%
IMR 4064	28.7	2,845	29.5	2,910	30.3	2,975	31.1	3,040	31.9	3,105	58,600	102%
Vihtavuori N135	27.5	2,860	28.3	2,925	29.0	2,980	29.8	3,050	30.5	3,105	58,400	99%
Accurate 2495	28.1	2,835	28.9	2,905	29.6	2,960	30.4	3,030	31.2	3,100	58,300	94%
Alliant TS 15.5	29.2	2,825	30.0	2,890	30.8	2,960	31.6	3,025	32.4	3,095	58,500	104%
Reload Swiss RS50	30.1	2,820	30.9	2,885	31.8	2,955	32.6	3,025	33.4	3,090	57,900	105%
Alliant Power Pro Varmint	28.2	2,825	29.0	2,895	29.8	2,960	30.5	3,020	31.3	3,085	58,300	99%
Accurate 2460	27.6	2,815	28.4	2,875	29.1	2,935	29.9	3,000	30.7	3,065	58,600	92%
Accurate 2015	26.0	2,770	26.7	2,830	27.4	2,890	28.2	2,960	28.9	3,020	58,600	90%

85 gr Bullet · 25" barrel

COAL: 2.160" • Bullet length: 0.937" • Seat depth: 0.337" • Usable capacity: 33.6 / 37.3 gr H_2O

Powder	STEP 1 · 90%		STEP 2		STEP 3		STEP 4		STEP 5 · LIMIT			
	gr	fps	gr	fps	gr	fps	gr	fps	gr	fps	psi	Fill
Hodgdon Leverevolution	30.5	2,900	31.4	2,970	32.2	3,035	33.0	3,100	33.9	3,175	58,400	96%
Hodgdon CFE 223	30.6	2,855	31.5	2,930	32.3	2,990	33.1	3,055	34.0	3,130	58,500	103%
Vihtavuori N540	29.9	2,870	30.7	2,935	31.6	3,005	32.4	3,070	33.2	3,130	58,500	105%
Accurate 2520	29.5	2,850	30.3	2,910	31.1	2,975	32.0	3,045	32.8	3,110	58,700	100%
Alliant Reloder 15	29.4	2,835	30.2	2,900	31.1	2,970	31.9	3,035	32.7	3,100	58,600	104%
Hodgdon BL-C(2)	29.8	2,815	30.6	2,880	31.5	2,955	32.3	3,020	33.1	3,085	58,300	99%
IMR 4895	28.6	2,820	29.4	2,885	30.2	2,945	31.0	3,015	31.8	3,080	58,600	98%
Winchester 748	29.3	2,820	30.1	2,885	30.9	2,950	31.7	3,015	32.5	3,080	58,400	99%
Hodgdon Varget	28.5	2,790	29.3	2,855	30.1	2,920	30.9	2,990	31.7	3,055	58,700	98%
Norma 202	28.1	2,790	28.9	2,855	29.6	2,910	30.4	2,975	31.2	3,040	58,600	101%
Ramshot TAC	27.8	2,785	28.6	2,850	29.4	2,915	30.1	2,975	30.9	3,040	58,400	98%
Accurate 2495	27.8	2,775	28.6	2,840	29.4	2,905	30.1	2,965	30.9	3,030	58,400	93%
Hodgdon Benchmark	26.9	2,785	27.6	2,840	28.4	2,905	29.1	2,965	29.9	3,030	58,500	98%
Hodgdon H4895	27.4	2,785	28.1	2,845	28.9	2,910	29.6	2,965	30.4	3,030	58,700	94%
IMR 4064	28.3	2,780	29.1	2,845	29.9	2,905	30.6	2,965	31.4	3,030	58,400	100%
Reload Swiss RS50	29.9	2,770	30.7	2,830	31.6	2,905	32.4	2,965	33.2	3,030	58,400	104%
Shooters World The Creed	29.2	2,755	30.0	2,820	30.8	2,885	31.6	2,950	32.4	3,015	58,400	100%
Vihtavuori N135	27.0	2,775	27.8	2,840	28.5	2,895	29.3	2,960	30.0	3,015	58,600	97%
Hodgdon H4350	31.4	2,715	32.3	2,785	33.1	2,850	34.0	2,925	34.9	2,995	55,800	105%
Hodgdon H335	26.5	2,675	27.2	2,730	27.9	2,790	28.7	2,850	29.4	2,910	58,400	86%

90 gr Bullet · 25" barrel

COAL: 2.200" • Bullet length: 1.065" • Seat depth: 0.424" • Usable capacity: 32.5 / 37.3 gr H_2O

Powder	STEP 1 · 90%		STEP 2		STEP 3		STEP 4		STEP 5 · LIMIT			
	gr	fps	gr	fps	gr	fps	gr	fps	gr	fps	psi	Fill
Hodgdon Leverevolution	29.5	2,800	30.3	2,865	31.1	2,930	32.0	3,000	32.8	3,065	58,300	96%
Hodgdon CFE 223	29.6	2,760	30.4	2,820	31.3	2,895	32.1	2,960	32.9	3,025	58,500	103%
Vihtavuori N540	28.8	2,765	29.6	2,825	30.4	2,890	31.2	2,950	32.0	3,015	58,400	104%
Accurate 2520	28.5	2,745	29.3	2,810	30.1	2,870	30.9	2,935	31.7	3,000	58,600	100%
Alliant Reloder 15	28.4	2,740	29.2	2,800	29.9	2,860	30.7	2,920	31.5	2,985	58,400	103%
Hodgdon BL-C(2)	28.9	2,725	29.7	2,790	30.5	2,855	31.3	2,920	32.1	2,985	58,500	99%
Winchester 748	28.4	2,725	29.2	2,790	29.9	2,850	30.7	2,915	31.5	2,980	58,700	100%
IMR 4895	27.6	2,720	28.4	2,785	29.1	2,840	29.9	2,905	30.7	2,970	58,600	97%
Hodgdon Varget	27.5	2,690	28.3	2,760	29.1	2,825	29.8	2,880	30.6	2,945	58,500	98%
Shooters World Match Rifle	27.6	2,685	28.4	2,750	29.1	2,805	29.9	2,870	30.7	2,935	58,300	97%
Accurate 2495	26.9	2,680	27.6	2,735	28.4	2,805	29.1	2,860	29.9	2,930	58,600	92%
Ramshot TAC	26.9	2,685	27.6	2,745	28.4	2,810	29.1	2,865	29.9	2,930	58,400	98%
Norma 202	27.1	2,685	27.9	2,750	28.6	2,805	29.4	2,870	30.1	2,925	58,600	100%
Hodgdon H4895	26.4	2,680	27.1	2,740	27.9	2,805	28.6	2,860	29.3	2,920	58,400	93%
Hodgdon Benchmark	25.9	2,675	26.6	2,735	27.4	2,800	28.1	2,855	28.8	2,915	58,400	98%
Shooters World The Creed	28.2	2,660	29.0	2,725	29.8	2,790	30.5	2,845	31.3	2,910	58,300	100%
Alliant Power Pro Varmint	26.9	2,660	27.6	2,715	28.4	2,780	29.1	2,835	29.9	2,900	58,300	97%
Accurate 2700	30.2	2,625	31.0	2,690	31.9	2,760	32.7	2,825	33.5	2,890	56,500	105%
Hodgdon H414	30.2	2,610	31.0	2,675	31.9	2,745	32.7	2,810	33.5	2,870	56,600	105%
Alliant Reloder 17	29.4	2,595	30.2	2,660	31.1	2,735	31.9	2,800	32.7	2,865	58,400	101%

95 gr Bullet · 25" barrel

COAL: 2.200" • Bullet length: 1.146" • Seat depth: 0.506" • Usable capacity: 31.7 / 37.3 gr H_2O

Powder	STEP 1 · 90%		STEP 2		STEP 3		STEP 4		STEP 5 · LIMIT			
	gr	fps	gr	fps	gr	fps	gr	fps	gr	fps	psi	Fill
Hodgdon Leverevolution	28.7	2,720	29.5	2,785	30.3	2,850	31.1	2,915	31.9	2,980	58,400	96%
Hodgdon CFE 223	28.8	2,680	29.6	2,745	30.4	2,805	31.2	2,870	32.0	2,935	58,600	103%
Vihtavuori N540	27.9	2,675	28.7	2,735	29.4	2,790	30.2	2,855	31.0	2,915	58,300	104%
Accurate 2520	27.7	2,660	28.5	2,725	29.3	2,785	30.0	2,840	30.8	2,905	58,600	100%
Alliant Reloder 15	27.5	2,650	28.3	2,715	29.1	2,780	29.8	2,835	30.6	2,900	58,700	103%
Hodgdon BL-C(2)	28.1	2,645	28.9	2,710	29.6	2,765	30.4	2,835	31.2	2,900	58,300	99%
Winchester 748	27.5	2,640	28.3	2,705	29.1	2,770	29.8	2,825	30.6	2,890	58,500	99%
IMR 4895	26.8	2,635	27.6	2,700	28.3	2,760	29.1	2,825	29.8	2,880	58,700	97%
Hodgdon Varget	26.7	2,615	27.4	2,670	28.2	2,735	28.9	2,795	29.7	2,860	58,400	97%
Ramshot Big Game	29.3	2,595	30.1	2,655	31.0	2,730	31.8	2,790	32.6	2,855	55,600	105%
Alliant Power Pro 2000-MR	28.4	2,590	29.2	2,655	30.0	2,715	30.8	2,780	31.6	2,845	56,000	105%
Reload Swiss RS50	28.2	2,600	29.0	2,665	29.8	2,725	30.5	2,780	31.3	2,845	58,600	104%
Accurate 2495	26.1	2,595	26.8	2,655	27.6	2,720	28.3	2,780	29.0	2,835	58,300	92%
Accurate 4064	27.0	2,590	27.8	2,655	28.5	2,710	29.3	2,775	30.0	2,835	57,100	105%
Norma 202	26.3	2,605	27.0	2,660	27.8	2,720	28.5	2,780	29.2	2,835	58,700	100%
Hodgdon H4895	25.6	2,595	26.3	2,650	27.0	2,710	27.7	2,765	28.4	2,825	58,300	93%
Hodgdon Benchmark	25.1	2,590	25.8	2,650	26.5	2,705	27.2	2,760	27.9	2,820	58,400	97%
Hodgdon H414	29.3	2,535	30.1	2,600	31.0	2,670	31.8	2,735	32.6	2,795	56,600	105%
Winchester 760	29.1	2,520	29.9	2,585	30.7	2,645	31.5	2,710	32.3	2,770	55,100	105%
Hodgdon H335	24.8	2,490	25.5	2,545	26.2	2,605	26.9	2,660	27.6	2,715	58,300	86%

100 gr Bullet · 25" barrel

COAL: 2.140" • Bullet length: 1.052" • Seat depth: 0.472" • Usable capacity: 32.0 / 37.3 gr H_2O

Powder	STEP 1 · 90%		STEP 2		STEP 3		STEP 4		STEP 5 · LIMIT			
	gr	fps	gr	fps	gr	fps	gr	fps	gr	fps	psi	Fill
Hodgdon Leverevolution	28.5	2,655	29.3	2,715	30.1	2,780	30.9	2,845	31.7	2,905	58,600	95%
Hodgdon CFE 223	28.5	2,605	29.3	2,665	30.1	2,730	30.9	2,790	31.7	2,855	58,300	101%
Ramshot Big Game	29.7	2,585	30.5	2,645	31.4	2,715	32.2	2,775	33.0	2,835	58,500	105%
Hodgdon BL-C(2)	27.9	2,580	28.7	2,645	29.4	2,700	30.2	2,765	31.0	2,830	58,300	97%
Hodgdon H4350	29.8	2,565	30.6	2,630	31.5	2,700	32.3	2,765	33.1	2,825	58,600	104%
Alliant Power Pro 2000-MR	28.7	2,570	29.5	2,630	30.3	2,695	31.1	2,755	31.9	2,820	58,500	105%
Vihtavuori N540	27.5	2,590	28.3	2,655	29.0	2,705	29.8	2,765	30.5	2,820	58,400	101%
Accurate 2520	27.4	2,585	28.1	2,635	28.9	2,700	29.6	2,755	30.4	2,815	58,500	98%
IMR 4895	26.4	2,555	27.1	2,610	27.9	2,675	28.6	2,730	29.3	2,785	58,300	95%
Accurate 2700	29.5	2,525	30.3	2,585	31.1	2,650	32.0	2,720	32.8	2,780	58,300	104%
Hodgdon Varget	26.5	2,550	27.2	2,605	27.9	2,660	28.7	2,725	29.4	2,780	58,300	95%
Reload Swiss RS50	28.0	2,535	28.8	2,595	29.6	2,655	30.3	2,710	31.1	2,775	58,700	102%
Hodgdon H414	29.5	2,515	30.3	2,580	31.1	2,640	32.0	2,710	32.8	2,770	58,400	104%
Vihtavuori N150	26.9	2,535	27.6	2,590	28.4	2,650	29.1	2,705	29.9	2,770	56,800	105%
Shooters World The Creed	27.2	2,525	27.9	2,580	28.7	2,645	29.4	2,700	30.2	2,760	58,600	98%
Alliant Reloder 17	28.5	2,490	29.3	2,550	30.1	2,615	30.9	2,680	31.7	2,745	58,400	99%
Hodgdon H4895	25.3	2,515	26.0	2,575	26.7	2,630	27.4	2,685	28.1	2,740	58,500	91%
Winchester StaBALL Match	26.9	2,505	27.6	2,560	28.4	2,625	29.1	2,680	29.9	2,740	58,000	105%
Hodgdon Benchmark	24.8	2,510	25.5	2,565	26.2	2,625	26.9	2,680	27.6	2,735	58,700	95%
IMR 8208 XBR	25.0	2,500	25.7	2,555	26.4	2,610	27.1	2,665	27.8	2,725	58,600	94%

105 gr Bullet · 25" barrel

COAL: 2.200" • Bullet length: 1.230" • Seat depth: 0.590" • Usable capacity: 30.7 / 37.3 gr H_2O

Powder	STEP 1 · 90%		STEP 2		STEP 3		STEP 4		STEP 5 · LIMIT			
	gr	fps	gr	fps	gr	fps	gr	fps	gr	fps	psi	Fill
Hodgdon Leverevolution	27.5	2,570	28.3	2,635	29.0	2,690	29.8	2,750	30.5	2,810	58,300	95%
Hodgdon CFE 223	27.5	2,525	28.3	2,585	29.1	2,650	29.8	2,705	30.6	2,765	58,500	101%
Hodgdon BL-C(2)	26.9	2,500	27.6	2,555	28.4	2,615	29.1	2,675	29.9	2,740	58,200	98%
Hodgdon H4350	28.7	2,490	29.5	2,555	30.3	2,615	31.1	2,680	31.9	2,740	58,600	105%
Ramshot Big Game	28.4	2,485	29.2	2,545	30.0	2,605	30.8	2,670	31.6	2,730	57,300	105%
Vihtavuori N540	26.5	2,505	27.2	2,560	27.9	2,615	28.7	2,675	29.4	2,730	58,500	102%
Winchester 748	26.4	2,500	27.1	2,555	27.9	2,620	28.6	2,675	29.3	2,730	58,600	98%
Alliant Reloder 15	26.1	2,490	26.8	2,545	27.6	2,605	28.3	2,660	29.0	2,715	58,500	101%
IMR 4895	25.5	2,475	26.2	2,535	26.9	2,590	27.6	2,645	28.3	2,700	58,700	95%
Vihtavuori N140	26.0	2,470	26.7	2,525	27.4	2,580	28.2	2,640	28.9	2,695	58,600	96%
Accurate 4064	26.0	2,460	26.7	2,515	27.4	2,570	28.2	2,635	28.9	2,690	58,600	104%
Hodgdon Varget	25.5	2,465	26.2	2,520	26.9	2,575	27.6	2,635	28.3	2,690	58,300	96%
Hodgdon H414	28.4	2,435	29.2	2,495	30.0	2,560	30.8	2,620	31.6	2,685	58,200	105%
Accurate 2495	24.9	2,440	25.6	2,500	26.3	2,555	27.0	2,610	27.7	2,670	58,300	91%
Vihtavuori N150	25.8	2,445	26.5	2,500	27.3	2,560	28.0	2,615	28.7	2,670	56,300	105%
Winchester 760	28.2	2,420	29.0	2,480	29.8	2,545	30.5	2,595	31.3	2,660	56,700	105%
IMR 4166	25.0	2,430	25.7	2,485	26.4	2,540	27.1	2,600	27.8	2,655	58,600	100%
Hodgdon H4895	24.4	2,435	25.1	2,490	25.8	2,550	26.4	2,595	27.1	2,650	58,700	91%
Norma 203B	25.2	2,425	25.9	2,480	26.6	2,540	27.3	2,595	28.0	2,650	58,400	99%
IMR 8208 XBR	24.0	2,410	24.7	2,465	25.4	2,525	26.0	2,570	26.7	2,625	58,400	94%

115 gr Bullet · 25" barrel

COAL: 2.200" • Bullet length: 1.342" • Seat depth: 0.702" • Usable capacity: 29.7 / 37.3 gr H_2O

Powder	STEP 1 · 90%		STEP 2		STEP 3		STEP 4		STEP 5 · LIMIT			
	gr	fps	gr	fps	gr	fps	gr	fps	gr	fps	psi	Fill
Hodgdon Leverevolution	26.3	2,435	27.0	2,490	27.8	2,550	28.5	2,605	29.2	2,660	58,300	94%
Hodgdon CFE 223	26.4	2,395	27.1	2,450	27.9	2,510	28.6	2,565	29.3	2,620	58,600	100%
Hodgdon H4350	27.5	2,380	28.3	2,440	29.0	2,495	29.8	2,560	30.5	2,615	58,700	103%
Ramshot Big Game	27.5	2,380	28.3	2,445	29.0	2,495	29.8	2,555	30.5	2,610	58,300	104%
Hodgdon BL-C(2)	25.8	2,370	26.5	2,425	27.3	2,490	28.0	2,545	28.7	2,600	58,300	97%
Alliant Power Pro 2000-MR	26.6	2,370	27.3	2,425	28.1	2,485	28.8	2,540	29.5	2,595	58,500	104%
Norma 201	23.8	2,370	24.4	2,415	25.1	2,475	25.8	2,535	26.4	2,580	58,300	98%
Reload Swiss RS60	27.3	2,335	28.1	2,395	28.8	2,450	29.6	2,515	30.3	2,570	58,000	105%
Alliant Reloder 15	24.8	2,345	25.5	2,400	26.2	2,455	26.9	2,510	27.6	2,565	58,600	99%
Vihtavuori N540	25.1	2,350	25.8	2,405	26.5	2,460	27.2	2,510	27.9	2,565	58,400	100%
Vihtavuori N150	25.0	2,340	25.7	2,395	26.4	2,450	27.1	2,505	27.8	2,560	58,700	105%
Hodgdon H380	26.5	2,335	27.2	2,385	27.9	2,440	28.7	2,500	29.4	2,555	56,900	105%
Winchester 760	27.3	2,325	28.1	2,385	28.8	2,440	29.6	2,500	30.3	2,555	58,100	105%
Hodgdon Varget	24.4	2,335	25.1	2,390	25.8	2,445	26.4	2,495	27.1	2,550	58,700	95%
IMR 4895	24.2	2,330	24.9	2,385	25.5	2,435	26.2	2,490	26.9	2,545	58,600	93%
Reload Swiss RS50	25.8	2,315	26.5	2,370	27.3	2,430	28.0	2,485	28.7	2,540	58,400	101%
Shooters World The Creed	25.0	2,315	25.7	2,370	26.4	2,420	27.1	2,475	27.8	2,530	58,600	97%
Accurate 2495	23.9	2,315	24.5	2,365	25.2	2,420	25.9	2,475	26.5	2,525	58,500	90%
IMR 4451	26.9	2,275	27.6	2,330	28.4	2,390	29.1	2,445	29.9	2,505	58,500	105%
Norma 202	23.7	2,285	24.4	2,340	25.0	2,385	25.6	2,435	26.3	2,490	58,600	96%

6mm Creedmoor

The 6mm Creedmoor began as a wildcat around 2009. The 6.5 Creedmoor case was necked down to accept .243-inch bullets in a collaboration involving Outdoor Life magazine, GA Precision and Hornady. The parent 6.5 Creedmoor is itself derived from the .30 Thompson/Center. The 6mm version retains its short-action length. It also keeps its ability to accept long high-ballistic-coefficient bullets. Interest grew with the rise of the Precision Rifle Series (PRS). SAAMI accepted the cartridge in 2017 after Hornady submitted it.

Hornady and Ruger introduced factory ammunition and rifles at about the same time. Ruger offered the chambering in its Precision Rifle and American Rifle Predator. Hornady's initial load used a 108-grain ELD Match bullet rated at 2,960 fps from a 24-inch barrel. Light recoil and good wind resistance have made the cartridge widely used in PRS and other long-range competitions. It is also used for varmints, predators and deer-sized game. Brass and ammunition are now offered by several manufacturers.

Cartridge specifications	
Bullet Diameter	**0.243" (6.17 mm)**
Max Case Length	**1.920" (48.77 mm)**
Case Trim Length	**1.910" (48.51 mm)**
Max COAL	**2.800" (71.12 mm)**
Primer Pocket	**Large Rifle**
Standard Twist	**1:8"**
Case Capacity	**51.0 gr H_2O**
Max Pressure	**62,000 psi (SAAMI)**

55 gr Bullet · 25" barrel

COAL: 2.480" • Bullet length: 0.849" • Seat depth: 0.289" • Usable capacity: 48.1 / 51.0 gr H_2O

Powder	STEP 1 · 90%		STEP 2		STEP 3		STEP 4		STEP 5 · LIMIT			
	gr	fps	gr	fps	gr	fps	gr	fps	gr	fps	psi	Fill
Hodgdon Leverevolution	42.6	3,855	43.8	3,945	45.0	4,035	46.1	4,120	47.3	4,215	61,900	94%
IMR 4895	41.0	3,810	42.1	3,895	43.3	3,985	44.5	4,080	45.6	4,165	61,700	98%
Vihtavuori N540	41.8	3,820	42.9	3,900	44.1	3,990	45.3	4,080	46.4	4,160	61,900	102%
Accurate 2520	41.0	3,805	42.1	3,885	43.3	3,975	44.4	4,055	45.5	4,140	61,700	97%
Alliant Reloder 15	41.8	3,790	42.9	3,870	44.1	3,965	45.3	4,055	46.4	4,140	61,900	103%
Reload Swiss RS52	41.2	3,755	42.4	3,850	43.5	3,935	44.6	4,020	45.8	4,115	62,000	100%
Hodgdon BL-C(2)	41.6	3,750	42.8	3,840	43.9	3,925	45.1	4,020	46.2	4,105	61,900	96%
Vihtavuori N140	41.1	3,745	42.3	3,835	43.4	3,920	44.6	4,010	45.7	4,095	62,000	97%
Alliant AR-Comp	37.8	3,770	38.8	3,845	39.9	3,930	41.0	4,010	42.0	4,090	61,700	94%
IMR 4064	40.8	3,745	41.9	3,830	43.0	3,910	44.2	4,005	45.3	4,090	61,900	101%
Norma 202	39.7	3,750	40.8	3,830	41.9	3,910	43.0	3,995	44.1	4,080	61,700	99%
IMR 4166	39.4	3,710	40.5	3,795	41.6	3,880	42.7	3,965	43.8	4,050	61,900	101%
Accurate 4064	41.0	3,695	42.1	3,780	43.3	3,870	44.4	3,955	45.5	4,045	61,900	105%
Hodgdon Benchmark	38.0	3,725	39.0	3,800	40.1	3,885	41.2	3,970	42.2	4,045	61,800	97%
Ramshot Big Game	43.7	3,675	44.9	3,765	46.1	3,855	47.3	3,945	48.5	4,035	61,800	103%
Vihtavuori N130	34.5	3,730	35.5	3,810	36.4	3,885	37.3	3,955	38.3	4,035	61,800	91%
IMR 3031	37.6	3,695	38.6	3,775	39.7	3,860	40.8	3,945	41.8	4,025	61,900	93%
Hodgdon Varget	39.7	3,665	40.8	3,750	41.9	3,835	43.0	3,920	44.1	4,005	61,900	95%
Accurate 2700	44.0	3,620	45.2	3,710	46.5	3,810	47.7	3,900	48.9	3,990	61,900	104%
Vihtavuori N150	40.0	3,625	41.1	3,705	42.2	3,790	43.3	3,875	44.4	3,960	61,800	104%

70 gr Bullet · 25" barrel

COAL: 2.490" • Bullet length: 0.872" • Seat depth: 0.301" • Usable capacity: 47.6 / 51.0 gr H_2O

Powder	STEP 1 · 90%		STEP 2		STEP 3		STEP 4		STEP 5 · LIMIT			
	gr	fps	gr	fps	gr	fps	gr	fps	gr	fps	psi	Fill
Hodgdon Leverevolution	40.3	3,500	41.4	3,580	42.5	3,660	43.7	3,745	44.8	3,825	61,700	90%
Vihtavuori N550	42.7	3,500	43.9	3,585	45.0	3,660	46.2	3,740	47.4	3,825	61,700	105%
Winchester StaBALL 6.5	44.6	3,470	45.8	3,550	47.0	3,635	48.3	3,730	49.5	3,815	60,900	105%
Reload Swiss RS52	39.2	3,435	40.3	3,515	41.4	3,595	42.5	3,675	43.6	3,755	61,900	96%
Hodgdon BL-C(2)	39.7	3,435	40.8	3,510	41.9	3,590	43.0	3,670	44.1	3,750	61,900	93%
IMR 4895	38.4	3,440	39.5	3,520	40.5	3,590	41.6	3,670	42.7	3,750	61,800	93%
Alliant Reloder 15	39.0	3,430	40.1	3,505	41.1	3,575	42.2	3,655	43.3	3,730	61,800	97%
Hodgdon H4350	42.8	3,380	44.0	3,465	45.2	3,550	46.4	3,640	47.6	3,730	62,000	101%
Hodgdon H380	41.6	3,400	42.8	3,480	43.9	3,560	45.1	3,645	46.2	3,725	61,700	103%
Ramshot Big Game	41.6	3,380	42.8	3,465	43.9	3,540	45.1	3,625	46.2	3,705	61,800	99%
Accurate 2700	42.1	3,355	43.3	3,440	44.5	3,525	45.6	3,600	46.8	3,690	61,800	100%
IMR 4166	37.4	3,370	38.5	3,450	39.5	3,520	40.5	3,595	41.6	3,675	61,800	97%
Reload Swiss RS50	39.7	3,365	40.8	3,440	41.9	3,520	43.0	3,595	44.1	3,675	61,700	97%
Ramshot TAC	36.9	3,375	37.9	3,445	39.0	3,525	40.0	3,595	41.0	3,670	61,900	92%
Reload Swiss RS60	41.9	3,320	43.1	3,405	44.3	3,495	45.4	3,580	46.6	3,670	61,700	101%
Hodgdon Varget	37.5	3,350	38.5	3,420	39.6	3,500	40.7	3,580	41.7	3,650	61,900	91%
Shooters World The Creed	38.9	3,345	40.0	3,425	41.0	3,495	42.1	3,575	43.2	3,650	61,700	94%
Winchester 760	41.9	3,320	43.1	3,400	44.3	3,485	45.4	3,565	46.6	3,650	61,700	101%
Vihtavuori N150	37.4	3,290	38.5	3,370	39.5	3,440	40.5	3,510	41.6	3,585	62,000	98%
IMR 4451	41.4	3,220	42.5	3,300	43.7	3,390	44.9	3,475	46.0	3,555	61,800	100%

75 gr Bullet · 25" barrel

COAL: 2.492" • Bullet length: 0.815" • Seat depth: 0.243" • Usable capacity: 48.3 / 51.0 gr H_2O

Powder	STEP 1 · 90%		STEP 2		STEP 3		STEP 4		STEP 5 · LIMIT			
	gr	fps	gr	fps	gr	fps	gr	fps	gr	fps	psi	Fill
Winchester StaBALL 6.5	44.6	3,410	45.8	3,490	47.0	3,570	48.3	3,660	49.5	3,740	61,700	103%
Hodgdon Leverevolution	40.1	3,410	41.2	3,485	42.3	3,565	43.4	3,640	44.5	3,715	61,800	88%
Vihtavuori N550	42.0	3,390	43.2	3,470	44.4	3,550	45.5	3,625	46.7	3,705	61,900	102%
Hodgdon BL-C(2)	39.5	3,345	40.6	3,425	41.7	3,500	42.8	3,575	43.9	3,655	62,000	91%
Reload Swiss RS52	39.0	3,350	40.1	3,430	41.1	3,495	42.2	3,575	43.3	3,655	61,800	94%
Hodgdon H4350	42.5	3,320	43.7	3,400	44.9	3,485	46.0	3,560	47.2	3,645	61,900	99%
Hodgdon H380	41.3	3,315	42.4	3,390	43.6	3,470	44.8	3,555	45.9	3,630	61,800	101%
Winchester 748	38.7	3,330	39.8	3,405	40.9	3,480	41.9	3,550	43.0	3,630	61,900	92%
Alliant Reloder 15	38.5	3,325	39.6	3,400	40.6	3,470	41.7	3,545	42.8	3,620	61,900	95%
Ramshot Big Game	41.3	3,300	42.4	3,370	43.6	3,455	44.8	3,535	45.9	3,610	61,800	97%
Alliant Reloder 17	41.1	3,270	42.3	3,355	43.4	3,435	44.6	3,520	45.7	3,600	62,000	95%
Norma 204	43.4	3,250	44.6	3,330	45.8	3,415	47.0	3,500	48.2	3,585	61,100	105%
Vihtavuori N540	38.2	3,300	39.3	3,375	40.3	3,440	41.4	3,515	42.4	3,580	61,800	93%
Winchester 760	41.9	3,265	43.0	3,335	44.2	3,420	45.4	3,500	46.5	3,575	62,000	99%
Alliant Power Pro 4000-MR	43.7	3,235	44.9	3,320	46.1	3,400	47.3	3,480	48.5	3,565	61,700	102%
Reload Swiss RS70	45.2	3,215	46.5	3,300	47.7	3,385	49.0	3,475	50.2	3,560	62,000	105%
Ramshot Hunter	42.9	3,225	44.1	3,310	45.3	3,390	46.5	3,470	47.7	3,555	59,800	105%
Hodgdon Varget	37.2	3,260	38.2	3,330	39.3	3,405	40.3	3,475	41.3	3,545	61,800	89%
Winchester StaBALL Match	38.0	3,250	39.0	3,320	40.1	3,395	41.2	3,470	42.2	3,535	61,900	98%
IMR 4451	41.3	3,175	42.4	3,250	43.6	3,335	44.8	3,415	45.9	3,495	61,900	99%

80 gr Bullet · 25" barrel

COAL: 2.540" • Bullet length: 1.077" • Seat depth: 0.457" • Usable capacity: 45.9 / 51.0 gr H_2O

Powder	STEP 1 · 90%		STEP 2		STEP 3		STEP 4		STEP 5 · LIMIT			
	gr	fps	gr	fps	gr	fps	gr	fps	gr	fps	psi	Fill
Winchester StaBALL 6.5	42.7	3,285	43.9	3,370	45.0	3,445	46.2	3,525	47.4	3,610	61,700	104%
Hodgdon Leverevolution	38.3	3,280	39.4	3,360	40.5	3,435	41.5	3,505	42.6	3,585	62,000	89%
Vihtavuori N550	40.1	3,265	41.2	3,340	42.4	3,420	43.5	3,490	44.6	3,565	61,700	102%
Hodgdon H4350	40.6	3,205	41.7	3,285	42.9	3,365	44.0	3,445	45.1	3,525	61,900	99%
Hodgdon BL-C(2)	37.8	3,225	38.8	3,295	39.9	3,370	41.0	3,450	42.0	3,520	61,900	92%
Reload Swiss RS52	37.3	3,225	38.3	3,295	39.3	3,365	40.4	3,445	41.4	3,515	61,700	95%
Accurate 4350	41.2	3,180	42.4	3,260	43.5	3,335	44.6	3,415	45.8	3,500	61,800	104%
Hodgdon H414	40.5	3,180	41.6	3,255	42.8	3,340	43.9	3,415	45.0	3,495	61,800	100%
Alliant Reloder 15	36.7	3,195	37.7	3,265	38.8	3,340	39.8	3,410	40.8	3,480	61,800	95%
Ramshot Big Game	39.5	3,180	40.6	3,255	41.7	3,325	42.8	3,405	43.9	3,480	61,700	97%
IMR 4064	36.0	3,175	37.0	3,245	38.0	3,310	39.0	3,380	40.0	3,450	61,900	93%
Reload Swiss RS50	37.8	3,155	38.8	3,225	39.9	3,300	41.0	3,375	42.0	3,445	62,000	96%
Winchester 760	40.0	3,145	41.1	3,220	42.2	3,295	43.3	3,370	44.4	3,445	61,700	100%
Alliant Power Pro 4000-MR	41.8	3,125	42.9	3,200	44.1	3,280	45.3	3,365	46.4	3,440	61,700	103%
IMR 4166	35.6	3,160	36.6	3,230	37.5	3,290	38.5	3,365	39.5	3,435	61,900	96%
Ramshot TAC	35.0	3,145	36.0	3,215	37.0	3,285	37.9	3,350	38.9	3,420	62,000	90%
Hodgdon Varget	35.5	3,135	36.5	3,205	37.5	3,275	38.4	3,340	39.4	3,410	61,800	89%
Ramshot Hunter	40.8	3,100	41.9	3,175	43.0	3,245	44.2	3,330	45.3	3,405	58,600	105%
Norma 202	34.8	3,110	35.8	3,180	36.8	3,245	37.7	3,310	38.7	3,380	61,700	92%
IMR 4451	39.5	3,070	40.6	3,145	41.7	3,220	42.8	3,300	43.9	3,375	62,000	100%

85 gr Bullet · 25" barrel

COAL: 2.500" • Bullet length: 0.942" • Seat depth: 0.362" • Usable capacity: 47.0 / 51.0 gr H_2O

Powder	STEP 1 · 90%		STEP 2		STEP 3		STEP 4		STEP 5 · LIMIT			
	gr	fps	gr	fps	gr	fps	gr	fps	gr	fps	psi	Fill
Winchester StaBALL 6.5	42.8	3,225	44.0	3,305	45.1	3,375	46.3	3,455	47.5	3,540	61,700	102%
Hodgdon Leverevolution	38.3	3,205	39.3	3,270	40.4	3,345	41.5	3,420	42.5	3,490	62,000	86%
Vihtavuori N550	39.8	3,180	40.9	3,250	42.0	3,320	43.1	3,390	44.2	3,460	62,000	99%
Hodgdon H4350	40.5	3,145	41.6	3,220	42.8	3,300	43.9	3,375	45.0	3,450	61,800	96%
IMR 4350	41.1	3,140	42.3	3,220	43.4	3,295	44.6	3,375	45.7	3,450	62,000	104%
Hodgdon SUPERFORMANCE	42.9	3,120	44.1	3,200	45.3	3,280	46.5	3,360	47.7	3,445	61,700	99%
Accurate 4350	41.3	3,130	42.4	3,205	43.6	3,285	44.8	3,365	45.9	3,440	61,700	102%
Alliant Reloder 16	40.1	3,140	41.2	3,210	42.3	3,285	43.4	3,355	44.5	3,430	60,800	105%
Alliant Power Pro 2000-MR	38.8	3,130	39.9	3,205	41.0	3,275	42.0	3,345	43.1	3,420	61,800	96%
Ramshot Big Game	39.5	3,110	40.6	3,185	41.7	3,255	42.8	3,325	43.9	3,400	61,700	95%
Alliant Power Pro 4000-MR	42.0	3,080	43.2	3,160	44.4	3,240	45.5	3,315	46.7	3,395	61,900	101%
Alliant Reloder 15	36.5	3,110	37.5	3,180	38.5	3,245	39.5	3,310	40.5	3,375	61,700	92%
Accurate 4064	36.5	3,080	37.5	3,145	38.5	3,210	39.6	3,285	40.6	3,355	61,900	96%
IMR 4064	35.8	3,090	36.8	3,155	37.8	3,220	38.8	3,290	39.8	3,355	61,700	91%
IMR 4166	35.6	3,080	36.6	3,150	37.5	3,210	38.5	3,280	39.5	3,345	62,000	93%
Vihtavuori N540	36.1	3,070	37.1	3,140	38.1	3,205	39.1	3,265	40.1	3,335	61,900	91%
Hodgdon Varget	35.4	3,055	36.4	3,125	37.3	3,185	38.3	3,255	39.3	3,320	61,800	87%
IMR 4451	39.6	3,020	40.7	3,095	41.8	3,170	42.9	3,245	44.0	3,320	61,700	97%
Hodgdon H4895	33.9	3,025	34.9	3,090	35.8	3,155	36.8	3,220	37.7	3,280	61,800	83%
IMR 8208 XBR	33.7	3,015	34.6	3,075	35.5	3,135	36.5	3,205	37.4	3,265	62,000	86%

90 gr Bullet · 25" barrel

COAL: 2.600" • Bullet length: 1.083" • Seat depth: 0.402" • Usable capacity: 46.5 / 51.0 gr H_2O

Powder	STEP 1 · 90%		STEP 2		STEP 3		STEP 4		STEP 5 · LIMIT			
	gr	fps	gr	fps	gr	fps	gr	fps	gr	fps	psi	Fill
Winchester StaBALL 6.5	42.0	3,145	43.2	3,225	44.4	3,300	45.5	3,375	46.7	3,455	61,900	101%
Hodgdon Leverevolution	37.4	3,105	38.5	3,180	39.5	3,245	40.5	3,315	41.6	3,390	61,800	85%
Hodgdon H4350	39.7	3,075	40.8	3,145	41.9	3,220	43.0	3,295	44.1	3,370	61,800	96%
Hodgdon SUPERFORMANCE	42.2	3,060	43.4	3,135	44.5	3,210	45.7	3,290	46.9	3,370	61,700	99%
IMR 4350	40.3	3,070	41.4	3,140	42.5	3,215	43.7	3,295	44.8	3,365	61,900	103%
Norma URP	39.5	3,060	40.6	3,135	41.7	3,210	42.8	3,285	43.9	3,365	61,900	103%
Vihtavuori N550	38.8	3,085	39.9	3,150	41.0	3,220	42.0	3,285	43.1	3,355	61,700	97%
Reload Swiss RS70	42.8	3,025	44.0	3,105	45.1	3,175	46.3	3,260	47.5	3,340	61,900	103%
Hodgdon H380	38.7	3,050	39.8	3,120	40.9	3,190	41.9	3,255	43.0	3,330	62,000	98%
Winchester 760	39.4	3,020	40.5	3,090	41.6	3,160	42.7	3,235	43.8	3,305	62,000	97%
Alliant Reloder 15	35.6	3,015	36.6	3,085	37.6	3,150	38.6	3,215	39.6	3,280	61,700	91%
IMR 4064	35.1	3,005	36.1	3,075	37.0	3,130	38.0	3,200	39.0	3,265	62,000	90%
Reload Swiss RS50	37.1	2,995	38.1	3,060	39.2	3,135	40.2	3,200	41.2	3,265	61,900	93%
Accurate 4064	35.7	2,990	36.7	3,055	37.7	3,125	38.7	3,190	39.7	3,255	61,700	95%
IMR 4166	34.8	2,990	35.8	3,055	36.8	3,120	37.7	3,185	38.7	3,250	61,900	92%
IMR 4451	39.0	2,965	40.1	3,035	41.1	3,100	42.2	3,175	43.3	3,250	61,900	97%
Vihtavuori N540	35.2	2,975	36.2	3,040	37.2	3,105	38.1	3,160	39.1	3,225	61,700	89%
Winchester StaBALL Match	35.6	2,965	36.6	3,030	37.6	3,095	38.6	3,160	39.6	3,225	61,900	95%
Hodgdon H4895	33.2	2,935	34.1	2,995	35.0	3,060	36.0	3,125	36.9	3,185	61,900	82%
IMR 8208 XBR	32.9	2,920	33.8	2,980	34.7	3,040	35.6	3,100	36.5	3,160	61,800	85%

95 gr Bullet · 25" barrel

COAL: 2.650" • Bullet length: 1.146" • Seat depth: 0.416" • Usable capacity: 46.5 / 51.0 gr H_2O

Powder	STEP 1 · 90%		STEP 2		STEP 3		STEP 4		STEP 5 · LIMIT			
	gr	fps	gr	fps	gr	fps	gr	fps	gr	fps	psi	Fill
Winchester StaBALL 6.5	41.5	3,075	42.6	3,145	43.8	3,220	45.0	3,300	46.1	3,370	61,900	100%
Alliant Reloder 26	43.7	3,020	44.9	3,095	46.1	3,170	47.3	3,250	48.5	3,330	59,600	105%
Hodgdon SUPERFORMANCE	41.8	3,005	42.9	3,080	44.1	3,155	45.3	3,235	46.4	3,305	61,800	98%
Norma URP	39.0	3,005	40.1	3,080	41.1	3,145	42.2	3,220	43.3	3,295	61,800	102%
Reload Swiss RS62	41.1	2,990	42.3	3,070	43.4	3,140	44.6	3,220	45.7	3,295	62,000	102%
Vihtavuori N555	40.9	3,005	42.0	3,075	43.1	3,145	44.3	3,225	45.4	3,295	61,800	105%
Hodgdon H4350	39.1	3,005	40.2	3,080	41.3	3,150	42.3	3,215	43.4	3,290	61,700	94%
Hodgdon Leverevolution	36.8	3,020	37.8	3,085	38.8	3,155	39.9	3,225	40.9	3,290	61,600	84%
Alliant Reloder 16	38.8	2,995	39.9	3,065	41.0	3,135	42.0	3,200	43.1	3,270	61,800	103%
Norma MRP	42.0	2,960	43.2	3,035	44.4	3,115	45.5	3,185	46.7	3,260	61,800	105%
Accurate 2700	39.2	2,980	40.3	3,050	41.4	3,120	42.4	3,185	43.5	3,255	62,000	95%
Alliant Reloder 19	41.3	2,950	42.4	3,020	43.6	3,100	44.8	3,180	45.9	3,255	62,000	105%
Reload Swiss RS52	36.1	2,990	37.1	3,055	38.1	3,125	39.1	3,190	40.1	3,255	61,800	91%
Winchester 760	38.9	2,950	40.0	3,020	41.0	3,085	42.1	3,155	43.2	3,230	61,900	96%
IMR 4451	38.5	2,905	39.6	2,975	40.6	3,040	41.7	3,110	42.8	3,180	62,000	96%
Reload Swiss RS50	36.5	2,915	37.5	2,980	38.5	3,040	39.6	3,110	40.6	3,175	61,900	92%
Vihtavuori N160	39.6	2,900	40.7	2,970	41.8	3,040	42.9	3,105	44.0	3,175	61,800	103%
Winchester Supreme 780	43.6	2,860	44.8	2,940	46.0	3,015	47.2	3,090	48.4	3,170	59,200	105%
IMR 4166	34.3	2,910	35.3	2,975	36.2	3,035	37.1	3,095	38.1	3,160	61,800	91%
Vihtavuori N540	34.6	2,890	35.5	2,950	36.5	3,010	37.5	3,075	38.4	3,130	61,900	88%

100 gr Bullet · 25" barrel

COAL: 2.625" • Bullet length: 1.065" • Seat depth: 0.360" • Usable capacity: 47.1 / 51.0 gr H_2O

Powder	STEP 1 · 90%		STEP 2		STEP 3		STEP 4		STEP 5 · LIMIT			
	gr	fps	gr	fps	gr	fps	gr	fps	gr	fps	psi	Fill
Alliant Reloder 26	44.1	3,005	45.3	3,075	46.5	3,155	47.8	3,235	49.0	3,315	62,000	105%
Winchester StaBALL 6.5	41.2	3,000	42.4	3,075	43.5	3,145	44.6	3,210	45.8	3,285	61,900	98%
IMR 4831	41.0	2,950	42.1	3,020	43.3	3,100	44.4	3,170	45.5	3,245	61,800	104%
Hodgdon SUPERFORMANCE	41.6	2,950	42.8	3,025	43.9	3,095	45.1	3,170	46.2	3,240	62,000	96%
Reload Swiss RS62	41.0	2,940	42.1	3,010	43.3	3,090	44.4	3,160	45.5	3,230	61,800	101%
Norma URP	38.7	2,945	39.8	3,015	40.9	3,090	41.9	3,155	43.0	3,225	61,700	100%
Reload Swiss RS70	42.1	2,920	43.3	2,995	44.5	3,070	45.6	3,140	46.8	3,220	61,800	100%
IMR 7828SSC	42.3	2,915	43.5	2,990	44.6	3,060	45.8	3,135	47.0	3,210	62,000	104%
Hodgdon H4350	38.7	2,935	39.8	3,005	40.9	3,070	41.9	3,135	43.0	3,205	61,700	92%
Alliant Reloder 17	38.3	2,930	39.3	2,995	40.4	3,065	41.5	3,135	42.5	3,200	61,900	91%
Alliant Reloder 16	38.4	2,920	39.5	2,985	40.5	3,050	41.6	3,115	42.7	3,185	62,000	101%
Vihtavuori N560	42.5	2,900	43.7	2,970	44.9	3,040	46.0	3,105	47.2	3,180	62,000	105%
Accurate 2700	38.9	2,905	40.0	2,970	41.0	3,035	42.1	3,105	43.2	3,175	61,700	94%
Winchester Supreme 780	44.1	2,865	45.3	2,940	46.5	3,015	47.8	3,100	49.0	3,175	61,800	105%
Vihtavuori N550	37.4	2,900	38.5	2,965	39.5	3,030	40.5	3,090	41.6	3,155	61,900	93%
Hodgdon H4831SC	41.1	2,865	42.3	2,940	43.4	3,005	44.6	3,080	45.7	3,150	61,800	98%
IMR 4451	38.3	2,840	39.4	2,910	40.5	2,980	41.5	3,045	42.6	3,115	61,900	94%
Vihtavuori N160	39.2	2,830	40.3	2,895	41.4	2,960	42.5	3,030	43.6	3,095	61,800	101%
IMR 4064	34.1	2,835	35.0	2,895	36.0	2,960	37.0	3,020	37.9	3,080	61,900	86%
IMR 4166	34.0	2,825	35.0	2,890	35.9	2,945	36.8	3,005	37.8	3,070	61,900	89%

105 gr Bullet · 25" barrel

COAL: 2.730" • Bullet length: 1.241" • Seat depth: 0.431" • Usable capacity: 46.3 / 51.0 gr H_2O

Powder	STEP 1 · 90%		STEP 2		STEP 3		STEP 4		STEP 5 · LIMIT			
	gr	fps	gr	fps	gr	fps	gr	fps	gr	fps	psi	Fill
Alliant Reloder 26	43.2	2,940	44.4	3,015	45.6	3,090	46.8	3,165	48.0	3,240	61,900	104%
Winchester StaBALL 6.5	40.3	2,925	41.4	2,990	42.5	3,060	43.7	3,135	44.8	3,200	61,700	98%
Hodgdon SUPERFORMANCE	40.8	2,890	41.9	2,955	43.0	3,025	44.2	3,100	45.3	3,170	62,000	96%
IMR 4831	40.1	2,880	41.2	2,950	42.4	3,030	43.5	3,100	44.6	3,170	61,700	103%
Alliant Reloder 23	40.3	2,880	41.4	2,950	42.5	3,020	43.7	3,090	44.8	3,160	59,200	105%
Reload Swiss RS62	40.1	2,875	41.2	2,945	42.4	3,020	43.5	3,090	44.6	3,160	61,800	100%
Alliant Reloder 22	41.1	2,865	42.3	2,940	43.4	3,010	44.6	3,085	45.7	3,155	61,200	105%
IMR 7828SSC	41.3	2,850	42.4	2,915	43.6	2,990	44.8	3,065	45.9	3,135	61,700	103%
Hodgdon H4350	37.9	2,865	39.0	2,935	40.0	3,000	41.0	3,060	42.1	3,130	62,000	92%
Norma MRP	41.0	2,845	42.1	2,910	43.3	2,985	44.5	3,060	45.6	3,130	62,000	102%
Alliant Reloder 17	37.4	2,855	38.5	2,925	39.5	2,990	40.5	3,055	41.6	3,125	61,700	90%
Winchester Supreme 780	43.2	2,810	44.4	2,885	45.6	2,960	46.8	3,035	48.0	3,110	61,700	104%
Alliant Reloder 16	37.5	2,845	38.5	2,905	39.6	2,970	40.7	3,040	41.7	3,100	62,000	100%
IMR 7828	41.6	2,815	42.8	2,890	43.9	2,960	45.1	3,035	46.2	3,100	61,900	100%
Vihtavuori N560	41.5	2,830	42.6	2,895	43.8	2,965	45.0	3,035	46.1	3,100	62,000	104%
Winchester 760	37.8	2,815	38.8	2,875	39.9	2,945	41.0	3,010	42.0	3,075	61,800	93%
Hodgdon H380	36.8	2,810	37.8	2,870	38.8	2,935	39.9	3,000	40.9	3,065	61,800	94%
Vihtavuori N550	36.5	2,820	37.5	2,880	38.5	2,940	39.5	3,000	40.5	3,065	61,700	92%
IMR 4451	37.5	2,775	38.5	2,840	39.6	2,905	40.7	2,975	41.7	3,040	61,900	94%
Vihtavuori N160	38.3	2,760	39.4	2,825	40.5	2,890	41.5	2,950	42.6	3,020	61,700	100%

110 gr Bullet · 25" barrel

COAL: 2.735" • Bullet length: 1.326" • Seat depth: 0.511" • Usable capacity: 45.4 / 51.0 gr H_2O

Powder	STEP 1 · 90%		STEP 2		STEP 3		STEP 4		STEP 5 · LIMIT			
	gr	fps	gr	fps	gr	fps	gr	fps	gr	fps	psi	Fill
Alliant Reloder 26	42.2	2,870	43.4	2,945	44.5	3,015	45.7	3,090	46.9	3,165	61,800	104%
Winchester StaBALL 6.5	39.4	2,850	40.5	2,920	41.6	2,985	42.7	3,055	43.8	3,120	61,900	97%
IMR 4831	39.2	2,815	40.3	2,885	41.4	2,955	42.5	3,025	43.6	3,095	61,600	103%
Alliant Reloder 22	40.3	2,810	41.4	2,880	42.5	2,945	43.7	3,020	44.8	3,090	61,800	105%
Hodgdon SUPERFORMANCE	39.8	2,815	40.9	2,885	42.0	2,950	43.1	3,020	44.2	3,090	61,700	95%
Alliant Reloder 23	39.4	2,815	40.5	2,880	41.6	2,950	42.7	3,015	43.8	3,085	59,300	105%
Reload Swiss RS62	39.2	2,805	40.3	2,875	41.4	2,945	42.5	3,015	43.6	3,085	61,800	100%
Hodgdon Hybrid 100V	37.4	2,800	38.4	2,860	39.5	2,935	40.5	3,000	41.5	3,065	61,700	103%
Vihtavuori N555	38.3	2,800	39.4	2,865	40.5	2,935	41.5	2,995	42.6	3,065	61,900	101%
IMR 7828SSC	40.3	2,780	41.4	2,850	42.5	2,915	43.7	2,990	44.8	3,060	61,700	103%
Alliant Reloder 17	36.6	2,785	37.6	2,850	38.7	2,920	39.7	2,985	40.7	3,050	61,900	90%
Norma MRP	40.1	2,780	41.2	2,845	42.3	2,915	43.4	2,980	44.5	3,050	61,800	102%
Winchester Supreme 780	42.3	2,760	43.5	2,830	44.6	2,900	45.8	2,975	47.0	3,050	61,900	104%
Hodgdon H4350	36.9	2,790	37.9	2,850	39.0	2,920	40.0	2,985	41.0	3,045	61,900	91%
Alliant Power Pro 4000-MR	39.0	2,770	40.1	2,835	41.1	2,900	42.2	2,965	43.3	3,035	61,800	97%
Vihtavuori N560	40.4	2,760	41.5	2,820	42.6	2,885	43.8	2,955	44.9	3,020	62,000	103%
Alliant Reloder 16	36.5	2,765	37.5	2,825	38.5	2,885	39.6	2,950	40.6	3,015	61,900	99%
Vihtavuori N550	35.5	2,740	36.5	2,800	37.5	2,860	38.4	2,915	39.4	2,975	61,700	91%
IMR 4451	36.6	2,705	37.6	2,765	38.7	2,835	39.7	2,900	40.7	2,960	61,800	93%
Alliant Reloder 15	32.9	2,690	33.8	2,750	34.7	2,805	35.6	2,860	36.5	2,915	62,000	86%

115 gr Bullet · 25" barrel

COAL: 2.780" • Bullet length: 1.352" • Seat depth: 0.492" • Usable capacity: 45.6 / 51.0 gr H_2O

Powder	STEP 1 · 90%		STEP 2		STEP 3		STEP 4		STEP 5 · LIMIT			
	gr	fps	gr	fps	gr	fps	gr	fps	gr	fps	psi	Fill
Alliant Reloder 26	41.9	2,825	43.1	2,900	44.3	2,970	45.4	3,040	46.6	3,115	61,900	103%
Alliant Reloder 23	39.7	2,800	40.8	2,865	41.9	2,930	43.0	3,000	44.1	3,065	61,700	105%
Winchester StaBALL 6.5	39.1	2,795	40.2	2,860	41.3	2,925	42.3	2,985	43.4	3,055	62,000	96%
IMR 4831	39.1	2,780	40.2	2,845	41.3	2,915	42.3	2,980	43.4	3,050	61,700	102%
Alliant Reloder 22	40.1	2,770	41.2	2,835	42.3	2,905	43.4	2,970	44.5	3,040	61,800	104%
Hodgdon SUPERFORMANCE	39.5	2,765	40.6	2,835	41.7	2,900	42.8	2,965	43.9	3,035	61,800	94%
Reload Swiss RS62	39.0	2,765	40.1	2,830	41.1	2,895	42.2	2,965	43.3	3,030	61,700	99%
IMR 4955	39.2	2,750	40.3	2,815	41.4	2,885	42.5	2,950	43.6	3,020	61,900	96%
Alliant Reloder 19	39.2	2,740	40.3	2,805	41.4	2,875	42.5	2,945	43.6	3,010	62,000	102%
Accurate 4350	37.8	2,745	38.8	2,805	39.9	2,875	41.0	2,940	42.0	3,000	61,900	96%
Alliant Reloder 17	36.4	2,740	37.4	2,800	38.4	2,865	39.4	2,930	40.4	2,990	61,900	89%
Vihtavuori N555	37.7	2,735	38.8	2,805	39.8	2,865	40.9	2,930	41.9	2,990	61,800	99%
Hodgdon H4350	36.5	2,730	37.5	2,795	38.5	2,855	39.6	2,920	40.6	2,985	62,000	90%
Hodgdon H4831	39.6	2,710	40.7	2,775	41.8	2,845	42.9	2,910	44.0	2,980	61,700	104%
IMR 4350	37.1	2,725	38.1	2,790	39.2	2,855	40.2	2,915	41.2	2,975	61,700	97%
IMR 7828	40.1	2,700	41.2	2,765	42.4	2,840	43.5	2,905	44.6	2,970	61,600	98%
Accurate MagPro	42.2	2,680	43.4	2,755	44.5	2,820	45.7	2,895	46.9	2,965	60,400	105%
Hodgdon H4831SC	39.2	2,700	40.3	2,765	41.4	2,830	42.4	2,890	43.5	2,960	61,900	96%
Vihtavuori N165	40.1	2,680	41.2	2,745	42.4	2,815	43.5	2,880	44.6	2,945	61,500	105%
Vihtavuori N560	39.8	2,695	40.9	2,755	42.0	2,820	43.1	2,880	44.2	2,945	61,800	101%

6mm Dasher

Dan Dowling and Al Ashton developed the 6mm Dasher in 1999 for 100- and 200-yard benchrest competition. The name combines “Dan” and “Ashton.” They based it on the 6mm BR case. The shoulder was moved forward about .120 inch. Its angle was increased from 30 to 40 degrees in the style of an improved cartridge. The 6mm Dasher was recognized by C.I.P. in 2023. Factory-made Dasher brass is now available.

Early loads used bullets of 60 to 70 grains for short-range benchrest work. In longer-range competition shooters now commonly use 105-grain bullets at about 2,900 fps or more. They also use 115-grain bullets at somewhat lower velocities. The cartridge has been successful in long-range benchrest matches. It has also become widely used in Precision Rifle Series (PRS) competition. There its light recoil, accuracy and reasonable barrel life suit engaging steel targets at 1,000 yards and beyond.

Cartridge specifications	
Bullet Diameter	**0.243" (6.17 mm)**
Max Case Length	**1.545" (39.24 mm)**
Case Trim Length	**1.535" (38.99 mm)**
Max COAL	**2.362" (60.00 mm)**
Primer Pocket	**Small Rifle**
Standard Twist	**1:8"**
Case Capacity	**41.1 gr H_2O**
Max Pressure	**4,400 bar / 63,817 psi (C.I.P.)**

60 gr Bullet · 25" barrel

COAL: 2.064" • Bullet length: 0.763" • Seat depth: 0.243" • Usable capacity: 38.3 / 41.0 gr H_2O

Powder	STEP 1 · 90%		STEP 2		STEP 3		STEP 4		STEP 5 · LIMIT			
	gr	fps	gr	fps	gr	fps	gr	fps	gr	fps	psi	Fill
Hodgdon Leverevolution	36.5	3,565	37.5	3,650	38.5	3,735	39.5	3,825	40.5	3,915	63,400	101%
Hodgdon CFE BLK	30.0	3,570	30.8	3,645	31.6	3,715	32.5	3,795	33.3	3,870	63,700	89%
Accurate 2520	35.2	3,520	36.2	3,605	37.2	3,690	38.1	3,765	39.1	3,855	62,200	105%
Alliant AR-Comp	32.7	3,535	33.6	3,615	34.5	3,690	35.4	3,765	36.3	3,845	63,700	101%
Vihtavuori N530	32.8	3,530	33.7	3,605	34.6	3,685	35.5	3,765	36.4	3,845	63,600	102%
IMR 4895	34.7	3,490	35.7	3,575	36.7	3,665	37.6	3,740	38.6	3,830	63,800	104%
Vihtavuori N140	35.3	3,470	36.3	3,555	37.3	3,645	38.2	3,720	39.2	3,810	63,500	104%
Hodgdon H4895	33.3	3,480	34.2	3,555	35.1	3,635	36.1	3,720	37.0	3,800	63,700	100%
Reload Swiss RS40	31.6	3,490	32.5	3,570	33.4	3,650	34.2	3,720	35.1	3,800	63,400	97%
IMR 8208 XBR	33.3	3,470	34.2	3,550	35.1	3,625	36.1	3,715	37.0	3,790	62,500	105%
Accurate 2460	33.4	3,470	34.3	3,540	35.3	3,625	36.2	3,700	37.1	3,775	63,400	97%
Hodgdon Benchmark	32.6	3,465	33.5	3,540	34.4	3,620	35.3	3,695	36.2	3,775	63,600	104%
Hodgdon Varget	34.5	3,430	35.5	3,520	36.4	3,600	37.3	3,680	38.3	3,770	63,500	104%
Hodgdon CFE 223	35.6	3,425	36.6	3,510	37.5	3,585	38.5	3,670	39.5	3,760	62,100	105%
Accurate 2230	32.5	3,435	33.4	3,505	34.3	3,580	35.2	3,655	36.1	3,730	63,400	95%
Accurate 2495	33.2	3,400	34.1	3,480	35.0	3,560	36.0	3,645	36.9	3,725	63,400	97%
Shooters World The Patriot	31.9	3,420	32.8	3,495	33.6	3,565	34.5	3,640	35.4	3,720	63,400	96%
Ramshot X-Terminator	32.1	3,415	33.0	3,490	33.9	3,565	34.8	3,640	35.7	3,715	63,500	94%
Shooters World Tactical Rifle	32.4	3,380	33.3	3,460	34.2	3,535	35.1	3,615	36.0	3,695	63,600	97%
Shooters World The Creed	34.8	3,335	35.8	3,420	36.8	3,505	37.7	3,585	38.7	3,670	62,300	105%

70 gr Bullet · 25" barrel

COAL: 2.200" • Bullet length: 0.898" • Seat depth: 0.243" • Usable capacity: 38.3 / 41.0 gr H_2O

Powder	STEP 1 · 90%		STEP 2		STEP 3		STEP 4		STEP 5 · LIMIT			
	gr	fps	gr	fps	gr	fps	gr	fps	gr	fps	psi	Fill
Hodgdon Leverevolution	35.5	3,380	36.5	3,460	37.5	3,545	38.4	3,620	39.4	3,700	63,400	98%
Accurate 2520	34.3	3,330	35.3	3,410	36.2	3,480	37.1	3,555	38.1	3,635	63,400	102%
Reload Swiss RS52	34.3	3,290	35.3	3,375	36.2	3,450	37.1	3,525	38.1	3,610	63,600	104%
Hodgdon BL-C(2)	34.7	3,285	35.7	3,370	36.6	3,445	37.5	3,520	38.5	3,605	63,800	101%
IMR 4895	33.5	3,295	34.4	3,370	35.4	3,450	36.3	3,525	37.2	3,600	63,400	100%
Winchester 748	34.1	3,280	35.0	3,355	36.0	3,440	37.0	3,520	37.9	3,595	63,700	102%
Hodgdon CFE 223	34.9	3,275	35.9	3,355	36.8	3,425	37.8	3,510	38.8	3,590	63,800	103%
Vihtavuori N530	31.2	3,300	32.1	3,375	33.0	3,450	33.8	3,515	34.7	3,590	63,800	97%
Alliant Reloder 15	33.9	3,265	34.9	3,345	35.8	3,420	36.8	3,500	37.7	3,575	60,800	105%
Hodgdon Varget	33.5	3,265	34.4	3,340	35.4	3,425	36.3	3,500	37.2	3,575	63,600	101%
IMR 8208 XBR	32.3	3,280	33.2	3,355	34.1	3,430	35.0	3,505	35.9	3,575	63,800	102%
Hodgdon H4895	32.2	3,275	33.1	3,350	34.0	3,420	34.9	3,495	35.8	3,570	63,800	97%
IMR 4064	33.3	3,250	34.2	3,325	35.1	3,395	36.1	3,480	37.0	3,550	63,400	103%
Accurate 2495	32.3	3,225	33.2	3,300	34.1	3,375	35.0	3,450	35.9	3,525	63,600	94%
IMR 4166	32.5	3,225	33.4	3,300	34.3	3,375	35.2	3,450	36.1	3,525	63,700	104%
Shooters World The Creed	34.1	3,205	35.0	3,280	36.0	3,360	37.0	3,445	37.9	3,520	63,600	103%
Accurate 2460	32.0	3,230	32.9	3,300	33.8	3,370	34.7	3,440	35.6	3,515	63,700	93%
Reload Swiss RS50	34.5	3,210	35.5	3,290	36.4	3,365	37.3	3,435	38.3	3,515	62,100	105%
Accurate 2015	30.2	3,190	31.0	3,260	31.9	3,335	32.7	3,400	33.5	3,465	63,400	91%
Accurate 2230	31.1	3,185	32.0	3,260	32.8	3,320	33.6	3,385	34.5	3,455	63,800	91%

90 gr Bullet · 25" barrel

COAL: 2.220" • Bullet length: 1.099" • Seat depth: 0.424" • Usable capacity: 36.3 / 41.0 gr H_2O

Powder	STEP 1 · 90%		STEP 2		STEP 3		STEP 4		STEP 5 · LIMIT			
	gr	fps	gr	fps	gr	fps	gr	fps	gr	fps	psi	Fill
Hodgdon Leverevolution	32.5	3,000	33.4	3,070	34.3	3,135	35.2	3,205	36.1	3,280	63,300	95%
Reload Swiss RS52	31.5	2,930	32.4	3,000	33.3	3,070	34.1	3,135	35.0	3,205	63,400	101%
Hodgdon BL-C(2)	31.9	2,925	32.8	2,995	33.6	3,060	34.5	3,130	35.4	3,200	63,300	98%
Hodgdon H4350	34.0	2,895	35.0	2,970	35.9	3,040	36.8	3,110	37.8	3,190	63,400	105%
Norma 201	29.7	2,920	30.5	2,985	31.4	3,060	32.2	3,125	33.0	3,190	63,700	101%
Ramshot Big Game	33.7	2,910	34.6	2,975	35.5	3,045	36.5	3,120	37.4	3,190	62,400	105%
Winchester 748	31.2	2,915	32.1	2,985	33.0	3,055	33.8	3,115	34.7	3,190	63,400	98%
Vihtavuori N540	31.3	2,920	32.2	2,990	33.0	3,050	33.9	3,115	34.8	3,185	63,300	102%
Alliant Power Pro 2000-MR	32.7	2,900	33.6	2,970	34.5	3,040	35.4	3,110	36.3	3,180	62,900	105%
Alliant Reloder 15	31.1	2,920	32.0	2,985	32.8	3,045	33.6	3,110	34.5	3,180	63,500	101%
Hodgdon Varget	30.5	2,900	31.4	2,970	32.2	3,030	33.0	3,095	33.9	3,165	63,500	97%
Shooters World Match Rifle	30.7	2,895	31.6	2,965	32.4	3,030	33.3	3,100	34.1	3,165	63,800	97%
IMR 4895	30.2	2,890	31.1	2,960	31.9	3,025	32.8	3,095	33.6	3,155	63,500	96%
Vihtavuori N140	30.9	2,890	31.8	2,960	32.6	3,020	33.4	3,085	34.3	3,155	63,400	96%
Accurate 2700	33.7	2,860	34.6	2,930	35.5	3,000	36.5	3,075	37.4	3,145	63,000	105%
Reload Swiss RS50	32.0	2,875	32.9	2,940	33.8	3,010	34.6	3,070	35.5	3,140	63,600	103%
Hodgdon H414	33.7	2,850	34.6	2,915	35.5	2,985	36.5	3,065	37.4	3,135	63,200	105%
IMR 4064	30.1	2,870	30.9	2,930	31.8	3,000	32.6	3,060	33.4	3,125	63,600	98%
Hodgdon H4895	29.2	2,870	30.0	2,930	30.8	2,995	31.6	3,055	32.4	3,120	63,700	92%
IMR 4166	29.7	2,850	30.5	2,910	31.4	2,980	32.2	3,045	33.0	3,110	63,300	101%

95 gr Bullet · 25" barrel

COAL: 2.300" • Bullet length: 1.146" • Seat depth: 0.391" • Usable capacity: 36.8 / 41.0 gr H_2O

Powder	STEP 1 · 90%		STEP 2		STEP 3		STEP 4		STEP 5 · LIMIT			
	gr	fps	gr	fps	gr	fps	gr	fps	gr	fps	psi	Fill
Hodgdon Leverevolution	32.4	2,940	33.3	3,005	34.2	3,075	35.1	3,145	36.0	3,215	63,800	93%
Ramshot Big Game	33.8	2,875	34.7	2,940	35.6	3,005	36.6	3,080	37.5	3,150	63,500	104%
Reload Swiss RS52	31.4	2,875	32.3	2,945	33.1	3,005	34.0	3,075	34.9	3,145	63,500	100%
Hodgdon BL-C(2)	31.8	2,870	32.7	2,940	33.5	3,000	34.4	3,070	35.3	3,140	63,400	96%
Hodgdon H4350	33.8	2,850	34.8	2,925	35.7	2,995	36.6	3,060	37.6	3,135	63,500	103%
Alliant Power Pro 2000-MR	32.7	2,860	33.6	2,925	34.5	2,995	35.4	3,060	36.3	3,130	63,600	104%
Norma 201	29.5	2,865	30.3	2,925	31.1	2,990	32.0	3,060	32.8	3,125	63,700	99%
Hodgdon CFE 223	31.8	2,845	32.7	2,910	33.5	2,970	34.4	3,035	35.3	3,105	63,400	98%
Alliant Reloder 15	30.8	2,850	31.7	2,915	32.5	2,975	33.4	3,040	34.2	3,100	63,800	99%
Vihtavuori N540	31.0	2,850	31.9	2,915	32.7	2,975	33.5	3,030	34.4	3,100	63,500	99%
Accurate 2520	30.9	2,845	31.8	2,910	32.6	2,970	33.4	3,025	34.3	3,095	63,800	96%
Hodgdon Varget	30.3	2,835	31.2	2,905	32.0	2,965	32.9	3,035	33.7	3,095	63,500	95%
Vihtavuori N150	30.9	2,835	31.8	2,900	32.6	2,960	33.4	3,020	34.3	3,090	63,700	105%
IMR 4895	30.0	2,830	30.8	2,890	31.6	2,950	32.5	3,015	33.3	3,080	63,800	93%
Vihtavuori N140	30.6	2,820	31.5	2,885	32.3	2,945	33.1	3,005	34.0	3,075	63,600	94%
IMR 4064	29.8	2,800	30.6	2,860	31.5	2,930	32.3	2,990	33.1	3,050	63,500	96%
IMR 4166	29.6	2,790	30.4	2,850	31.3	2,920	32.1	2,980	32.9	3,045	63,600	99%
Alliant Power Pro Varmint	29.4	2,770	30.2	2,830	31.1	2,900	31.9	2,960	32.7	3,020	63,400	94%
Norma 202	29.3	2,775	30.1	2,835	31.0	2,900	31.8	2,960	32.6	3,020	63,600	96%
Alliant AR-Comp	27.8	2,740	28.6	2,805	29.4	2,865	30.1	2,915	30.9	2,975	63,700	90%

100 gr Bullet · 25" barrel

COAL: 2.220" • Bullet length: 1.050" • Seat depth: 0.375" • Usable capacity: 36.9 / 41.0 gr H_2O

Powder	STEP 1 · 90%		STEP 2		STEP 3		STEP 4		STEP 5 · LIMIT			
	gr	fps	gr	fps	gr	fps	gr	fps	gr	fps	psi	Fill
Hodgdon Leverevolution	32.0	2,865	32.9	2,930	33.8	2,995	34.6	3,055	35.5	3,125	63,400	92%
Vihtavuori N550	33.2	2,835	34.1	2,895	35.0	2,960	36.0	3,030	36.9	3,095	63,700	105%
Ramshot Big Game	33.4	2,805	34.3	2,870	35.3	2,940	36.2	3,005	37.1	3,075	63,400	102%
Reload Swiss RS52	31.1	2,810	32.0	2,875	32.9	2,945	33.7	3,005	34.6	3,070	63,800	98%
Hodgdon BL-C(2)	31.5	2,805	32.4	2,870	33.3	2,935	34.1	2,995	35.0	3,065	63,600	95%
Hodgdon H4350	33.4	2,790	34.3	2,860	35.3	2,930	36.2	3,000	37.1	3,065	63,300	101%
Winchester StaBALL 6.5	34.6	2,795	35.5	2,860	36.5	2,930	37.5	3,000	38.4	3,065	60,300	105%
Reload Swiss RS60	33.4	2,770	34.3	2,840	35.3	2,915	36.2	2,980	37.1	3,050	63,500	103%
Accurate 2700	33.4	2,765	34.3	2,830	35.3	2,900	36.2	2,965	37.1	3,035	63,400	102%
Hodgdon CFE 223	31.4	2,765	32.3	2,830	33.1	2,890	34.0	2,955	34.9	3,025	63,500	96%
Hodgdon Varget	30.0	2,765	30.8	2,825	31.6	2,885	32.5	2,955	33.3	3,015	63,700	94%
Alliant Reloder 15	30.2	2,760	31.1	2,825	31.9	2,885	32.8	2,950	33.6	3,010	63,600	97%
Vihtavuori N540	30.4	2,760	31.3	2,825	32.1	2,880	32.9	2,935	33.8	3,005	63,600	97%
Reload Swiss RS50	31.5	2,740	32.4	2,805	33.3	2,870	34.1	2,930	35.0	2,995	63,600	100%
IMR 4955	34.7	2,705	35.7	2,775	36.6	2,840	37.5	2,910	38.5	2,985	62,200	105%
Shooters World The Creed	30.6	2,735	31.5	2,800	32.3	2,860	33.1	2,920	34.0	2,985	63,800	96%
IMR 4007 SSC	32.6	2,715	33.5	2,780	34.4	2,845	35.3	2,910	36.2	2,980	63,100	105%
IMR 4451	32.9	2,695	33.8	2,760	34.8	2,830	35.7	2,900	36.6	2,965	63,400	103%
Hodgdon H4895	28.4	2,710	29.2	2,765	30.0	2,825	30.8	2,885	31.6	2,945	63,600	89%
IMR 8208 XBR	28.4	2,715	29.2	2,775	29.9	2,825	30.7	2,885	31.5	2,945	63,400	93%

105 gr Bullet · 25" barrel

COAL: 2.320" • Bullet length: 1.236" • Seat depth: 0.461" • Usable capacity: 36.0 / 41.0 gr H_2O

Powder	STEP 1 · 90%		STEP 2		STEP 3		STEP 4		STEP 5 · LIMIT			
	gr	fps	gr	fps	gr	fps	gr	fps	gr	fps	psi	Fill
Hodgdon Leverevolution	31.1	2,775	32.0	2,840	32.8	2,900	33.6	2,960	34.5	3,025	63,400	92%
Vihtavuori N550	32.2	2,745	33.1	2,805	34.0	2,870	34.9	2,935	35.8	3,000	63,800	104%
Hodgdon H4350	32.5	2,720	33.4	2,785	34.3	2,850	35.2	2,915	36.1	2,985	63,700	101%
Ramshot Big Game	32.5	2,725	33.4	2,790	34.3	2,855	35.2	2,920	36.1	2,985	63,500	102%
Winchester StaBALL 6.5	33.7	2,715	34.6	2,780	35.5	2,845	36.5	2,915	37.4	2,980	60,400	105%
Hodgdon BL-C(2)	30.7	2,720	31.6	2,790	32.4	2,850	33.3	2,915	34.1	2,975	63,700	95%
Reload Swiss RS52	30.2	2,720	31.1	2,785	31.9	2,845	32.8	2,915	33.6	2,975	63,600	98%
Hodgdon H414	32.5	2,680	33.4	2,745	34.3	2,810	35.2	2,875	36.1	2,945	63,600	102%
Hodgdon CFE 223	30.5	2,680	31.4	2,745	32.2	2,805	33.0	2,860	33.9	2,925	63,500	96%
Hodgdon Varget	29.1	2,680	29.9	2,740	30.7	2,800	31.5	2,860	32.3	2,920	63,600	93%
Alliant Reloder 15	29.3	2,675	30.1	2,730	31.0	2,795	31.8	2,855	32.6	2,915	63,700	97%
IMR 4955	33.8	2,635	34.7	2,700	35.6	2,765	36.6	2,840	37.5	2,910	62,300	105%
Winchester StaBALL Match	30.0	2,665	30.8	2,725	31.6	2,785	32.5	2,850	33.3	2,910	63,500	104%
Vihtavuori N150	29.4	2,660	30.2	2,715	31.1	2,785	31.9	2,840	32.7	2,900	63,500	102%
Vihtavuori N540	29.4	2,660	30.2	2,720	31.1	2,785	31.9	2,840	32.7	2,900	63,400	96%
Accurate 2520	29.4	2,660	30.2	2,715	31.1	2,780	31.9	2,840	32.7	2,895	63,800	93%
IMR 4451	32.1	2,625	33.0	2,690	33.9	2,755	34.8	2,825	35.7	2,890	63,800	103%
Vihtavuori N140	29.3	2,655	30.1	2,715	30.9	2,775	31.7	2,830	32.5	2,890	63,700	92%
IMR 4895	28.5	2,650	29.3	2,705	30.1	2,765	30.9	2,825	31.7	2,885	63,500	91%
Norma 203B	28.7	2,635	29.5	2,695	30.3	2,755	31.1	2,815	31.9	2,875	63,600	96%

115 gr Bullet · 25" barrel

COAL: 2.350" • Bullet length: 1.342" • Seat depth: 0.537" • Usable capacity: 35.1 / 41.0 gr H_2O

Powder	STEP 1 · 90%		STEP 2		STEP 3		STEP 4		STEP 5 · LIMIT			
	gr	fps	gr	fps	gr	fps	gr	fps	gr	fps	psi	Fill
Hodgdon Leverevolution	29.9	2,635	30.7	2,690	31.6	2,755	32.4	2,815	33.2	2,875	63,700	90%
Hodgdon SUPERFORMANCE	33.8	2,605	34.8	2,675	35.7	2,740	36.6	2,805	37.6	2,875	62,700	105%
Winchester StaBALL 6.5	32.9	2,620	33.8	2,680	34.7	2,745	35.6	2,810	36.5	2,870	62,400	105%
Reload Swiss RS60	31.4	2,585	32.3	2,650	33.1	2,710	34.0	2,775	34.9	2,845	63,600	102%
Hodgdon H4350	31.1	2,585	32.0	2,650	32.9	2,715	33.7	2,775	34.6	2,840	63,500	99%
Ramshot Big Game	31.3	2,595	32.2	2,655	33.0	2,715	33.9	2,775	34.8	2,840	63,700	101%
Vihtavuori N550	30.7	2,595	31.6	2,655	32.4	2,710	33.3	2,770	34.1	2,825	63,700	102%
Hodgdon H414	31.3	2,555	32.2	2,620	33.0	2,680	33.9	2,745	34.8	2,810	63,600	101%
Winchester 760	31.3	2,555	32.2	2,615	33.0	2,675	33.9	2,740	34.8	2,805	63,600	102%
Alliant Power Pro 4000-MR	32.5	2,535	33.4	2,595	34.3	2,660	35.2	2,725	36.1	2,790	62,400	105%
IMR 4007 SSC	30.7	2,530	31.6	2,595	32.4	2,655	33.3	2,720	34.1	2,775	63,700	104%
Hodgdon Varget	27.9	2,535	28.7	2,595	29.4	2,645	30.2	2,705	31.0	2,765	63,800	92%
Winchester StaBALL Match	28.9	2,530	29.7	2,590	30.5	2,645	31.3	2,705	32.1	2,760	63,800	103%
Alliant Reloder 15	28.0	2,525	28.8	2,585	29.6	2,640	30.3	2,690	31.1	2,750	63,500	95%
Reload Swiss RS50	29.4	2,515	30.2	2,570	31.1	2,635	31.9	2,690	32.7	2,750	63,300	98%
Vihtavuori N150	28.2	2,520	29.0	2,580	29.8	2,635	30.5	2,685	31.3	2,745	63,700	100%
Shooters World The Creed	28.4	2,505	29.2	2,565	30.0	2,620	30.8	2,680	31.6	2,735	63,500	94%
Vihtavuori N540	28.1	2,510	28.9	2,570	29.6	2,615	30.4	2,675	31.2	2,730	63,500	94%
IMR 4895	27.3	2,505	28.1	2,565	28.8	2,615	29.6	2,675	30.3	2,725	63,600	89%
Vihtavuori N140	27.9	2,500	28.7	2,555	29.4	2,610	30.2	2,665	31.0	2,725	63,300	90%

6mm PPC

Ferris Pindell and Dr. Louis Palmisano designed the 6mm PPC in 1975 for benchrest shooting. The name stands for Pindell-Palmisano Cartridge. It is based on the .220 Russian (5.6x39mm). That target cartridge was derived from the 7.62x39mm. The designers necked it up and fireformed it to a short wide case with a 30-degree shoulder and a small rifle primer. In 1985 Sako standardized the cartridge at Palmisano's request under the name 6mm PPC USA. C.I.P. has listed the 6mm PPC-USA since April 1989.

The 6mm PPC is used almost exclusively in single-shot benchrest rifles. Within a few years of its introduction it was winning major short-range benchrest competitions in the United States and Europe. Since the 1980s it has been the dominant cartridge in 100- and 200-yard group benchrest. Competitors typically load flat-base match bullets of about 60 to 70 grains. Rifles have been offered by Sako, Ruger and Kimber. Brass is produced by Lapua, Norma and Sako. Factory-loaded ammunition is scarce. Most shooters handload.

Cartridge specifications	
Bullet Diameter	**0.243" (6.17 mm)**
Max Case Length	**1.515" (38.48 mm)**
Case Trim Length	**1.505" (38.23 mm)**
Max COAL	**2.193" (55.70 mm)**
Primer Pocket	**Small Rifle**
Standard Twist	**1:12"**
Case Capacity	**32.0 gr H_2O**
Max Pressure	**4,050 bar / 58,740 psi (C.I.P.)**

55 gr Bullet · 25" barrel

COAL: 2.060" • Bullet length: 0.849" • Seat depth: 0.304" • Usable capacity: 29.0 / 32.0 gr H_2O

Powder	STEP 1 · 90%		STEP 2		STEP 3		STEP 4		STEP 5 · LIMIT			
	gr	fps	gr	fps	gr	fps	gr	fps	gr	fps	psi	Fill
Hodgdon CFE BLK	25.7	3,460	26.4	3,535	27.1	3,610	27.8	3,690	28.5	3,765	58,400	101%
Shooters World SBR-SOCOM	22.1	3,410	22.7	3,480	23.4	3,560	24.0	3,630	24.6	3,700	58,700	87%
Alliant Power Pro 1200-R	26.4	3,305	27.1	3,375	27.9	3,460	28.6	3,535	29.3	3,610	58,600	103%
Accurate 1680	23.7	3,310	24.4	3,385	25.0	3,450	25.6	3,515	26.3	3,590	58,700	93%
Alliant Power Pro 300-MP	20.2	3,325	20.8	3,400	21.3	3,460	21.8	3,515	22.4	3,590	58,400	86%
Shooters World AR Plus	26.8	3,265	27.6	3,345	28.3	3,420	29.1	3,505	29.8	3,580	58,300	104%
Alliant Reloder 7	24.5	3,270	25.2	3,345	25.9	3,420	26.5	3,485	27.2	3,560	58,400	100%
Accurate 2015	26.4	3,210	27.1	3,285	27.9	3,370	28.6	3,445	29.3	3,520	58,400	105%
Accurate LT-30	24.4	3,210	25.1	3,285	25.8	3,360	26.4	3,425	27.1	3,500	58,400	94%
Vihtavuori N120	22.1	3,225	22.7	3,290	23.4	3,370	24.0	3,435	24.6	3,500	58,400	99%
Hodgdon H322	25.7	3,130	26.4	3,200	27.1	3,275	27.9	3,360	28.6	3,435	57,200	105%
Hodgdon H335	27.4	3,130	28.1	3,200	28.9	3,280	29.6	3,355	30.4	3,435	58,300	104%
Hodgdon H4198	22.3	3,105	22.9	3,170	23.6	3,250	24.2	3,315	24.8	3,380	58,300	98%
Hodgdon H4227	18.2	3,025	18.7	3,085	19.2	3,145	19.7	3,205	20.2	3,265	58,400	80%

60 gr Bullet · 25" barrel

COAL: 2.022" • Bullet length: 0.750" • Seat depth: 0.243" • Usable capacity: 29.3 / 32.0 gr H_2O

Powder	STEP 1 · 90%		STEP 2		STEP 3		STEP 4		STEP 5 · LIMIT			
	gr	fps	gr	fps	gr	fps	gr	fps	gr	fps	psi	Fill
Hodgdon CFE BLK	25.4	3,325	26.1	3,400	26.8	3,470	27.5	3,545	28.2	3,620	58,500	99%
Shooters World SBR-SOCOM	21.7	3,260	22.3	3,325	22.9	3,395	23.5	3,465	24.1	3,530	58,400	85%
Alliant Power Pro 1200-R	26.0	3,195	26.7	3,265	27.4	3,335	28.2	3,420	28.9	3,495	58,400	101%
Norma 200	25.5	3,185	26.2	3,260	26.9	3,335	27.6	3,405	28.3	3,480	57,800	105%
Shooters World AR Plus	26.6	3,170	27.4	3,250	28.1	3,320	28.9	3,400	29.6	3,475	58,600	102%
Accurate 1680	23.3	3,160	23.9	3,225	24.6	3,295	25.3	3,370	25.9	3,435	58,500	91%
Reload Swiss RS40	26.0	3,125	26.7	3,195	27.4	3,265	28.2	3,350	28.9	3,420	55,300	105%
Accurate 2015	26.2	3,115	26.9	3,190	27.6	3,260	28.4	3,340	29.1	3,415	58,400	103%
Alliant Power Pro 300-MP	19.7	3,155	20.3	3,225	20.8	3,285	21.3	3,345	21.9	3,415	58,200	83%
Shooters World The Patriot	26.6	3,115	27.3	3,185	28.1	3,265	28.8	3,335	29.5	3,405	56,700	105%
Accurate LT-32	25.1	3,090	25.8	3,165	26.5	3,235	27.2	3,305	27.9	3,380	55,600	105%
Accurate LT-30	24.1	3,090	24.8	3,160	25.5	3,235	26.1	3,295	26.8	3,365	58,300	92%
Hodgdon H322	25.7	3,065	26.4	3,135	27.1	3,205	27.9	3,290	28.6	3,360	58,500	104%
Vihtavuori N120	21.9	3,100	22.5	3,165	23.1	3,230	23.7	3,295	24.3	3,360	58,700	96%
Hodgdon H335	27.2	3,055	27.9	3,120	28.7	3,200	29.4	3,270	30.2	3,350	58,600	102%
Accurate 2495	27.5	3,030	28.3	3,110	29.0	3,180	29.8	3,260	30.5	3,335	57,600	105%
Shooters World Tactical Rifle	26.8	3,010	27.6	3,090	28.3	3,160	29.1	3,240	29.8	3,310	56,900	105%
Hodgdon H4198	22.1	3,000	22.7	3,060	23.3	3,125	23.9	3,190	24.5	3,255	58,500	96%

65 gr Bullet · 25" barrel

COAL: 2.075" • Bullet length: 0.840" • Seat depth: 0.280" • Usable capacity: 28.9 / 32.0 gr H_2O

Powder	STEP 1 · 90%		STEP 2		STEP 3		STEP 4		STEP 5 · LIMIT			
	gr	fps	gr	fps	gr	fps	gr	fps	gr	fps	psi	Fill
Hodgdon CFE BLK	24.8	3,195	25.5	3,265	26.1	3,325	26.8	3,400	27.5	3,470	58,600	98%
Shooters World SBR-SOCOM	21.1	3,120	21.7	3,190	22.3	3,255	22.8	3,315	23.4	3,380	58,600	83%
Alliant Power Pro 1200-R	25.4	3,090	26.1	3,160	26.8	3,230	27.5	3,300	28.2	3,375	58,600	99%
Norma 200	24.8	3,080	25.5	3,150	26.2	3,220	26.9	3,295	27.6	3,365	58,400	104%
Shooters World AR Plus	26.0	3,060	26.7	3,130	27.4	3,200	28.2	3,280	28.9	3,350	58,500	101%
Ramshot X-Terminator	26.9	3,060	27.6	3,125	28.4	3,200	29.1	3,270	29.9	3,345	57,400	105%
Reload Swiss RS40	25.7	3,050	26.4	3,120	27.1	3,190	27.8	3,260	28.5	3,330	56,700	105%
Shooters World The Patriot	26.1	3,020	26.8	3,090	27.6	3,165	28.3	3,235	29.0	3,300	58,200	104%
Accurate 2015	25.6	3,010	26.3	3,080	27.0	3,150	27.7	3,220	28.4	3,290	58,200	102%
Accurate 1680	22.7	3,030	23.3	3,090	23.9	3,150	24.6	3,225	25.2	3,285	58,400	90%
Accurate LT-32	24.8	3,010	25.5	3,085	26.1	3,145	26.8	3,215	27.5	3,285	57,000	105%
Accurate 2495	27.0	2,960	27.8	3,035	28.5	3,105	29.3	3,185	30.0	3,255	58,600	105%
Alliant Reloder 10x	24.1	2,975	24.8	3,050	25.5	3,120	26.1	3,185	26.8	3,255	56,100	105%
Hodgdon H322	25.1	2,960	25.8	3,030	26.5	3,100	27.2	3,175	27.9	3,245	58,400	103%
IMR 4198	22.7	2,990	23.3	3,050	23.9	3,115	24.6	3,185	25.2	3,245	57,200	105%
Hodgdon H335	26.6	2,960	27.3	3,025	28.1	3,105	28.8	3,175	29.5	3,240	58,500	101%
Hodgdon H4895	26.3	2,955	27.0	3,025	27.8	3,100	28.5	3,170	29.2	3,240	56,100	105%
Shooters World Tactical Rifle	26.5	2,950	27.2	3,020	27.9	3,090	28.7	3,170	29.4	3,240	58,500	105%
Accurate LT-30	23.5	2,970	24.1	3,030	24.8	3,100	25.5	3,170	26.1	3,230	58,200	91%
Vihtavuori N120	21.2	2,960	21.8	3,020	22.4	3,085	23.0	3,150	23.6	3,210	58,600	95%

70 gr Bullet · 25" barrel

COAL: 2.060" • Bullet length: 0.904" • Seat depth: 0.359" • Usable capacity: 27.9 / 32.0 gr H_2O

Powder	STEP 1 · 90%		STEP 2		STEP 3		STEP 4		STEP 5 · LIMIT			
	gr	fps	gr	fps	gr	fps	gr	fps	gr	fps	psi	Fill
Hodgdon CFE BLK	23.9	3,050	24.5	3,110	25.2	3,185	25.9	3,255	26.5	3,315	58,600	98%
Alliant Power Pro 1200-R	24.4	2,960	25.1	3,030	25.8	3,100	26.4	3,160	27.1	3,230	58,300	99%
Norma 200	23.9	2,960	24.5	3,020	25.2	3,090	25.9	3,165	26.5	3,225	58,200	103%
Ramshot X-Terminator	26.0	2,945	26.7	3,010	27.4	3,075	28.2	3,150	28.9	3,220	58,500	105%
Shooters World AR Plus	25.1	2,935	25.8	3,005	26.5	3,075	27.2	3,145	27.9	3,215	58,500	101%
Shooters World SBR-SOCOM	20.2	2,965	20.8	3,035	21.3	3,090	21.8	3,145	22.4	3,215	58,300	82%
Reload Swiss RS40	24.8	2,925	25.5	2,995	26.2	3,065	26.9	3,135	27.6	3,205	57,300	105%
Accurate 2230	26.0	2,930	26.7	2,995	27.4	3,060	28.2	3,135	28.9	3,200	56,200	105%
Shooters World The Patriot	25.2	2,900	25.9	2,965	26.6	3,035	27.3	3,100	28.0	3,170	58,600	104%
Accurate LT-32	23.9	2,885	24.6	2,955	25.3	3,025	25.9	3,085	26.6	3,160	57,500	105%
Accurate 2015	24.7	2,885	25.4	2,955	26.0	3,015	26.7	3,085	27.4	3,155	58,200	102%
Alliant Reloder 10x	23.4	2,875	24.0	2,940	24.7	3,010	25.4	3,080	26.0	3,145	57,000	105%
Alliant Reloder 7	22.5	2,885	23.1	2,945	23.8	3,020	24.4	3,080	25.0	3,140	58,200	95%
Accurate 2495	26.0	2,845	26.7	2,915	27.4	2,985	28.2	3,060	28.9	3,130	58,300	104%
Hodgdon H4895	25.5	2,860	26.2	2,925	26.9	2,995	27.6	3,060	28.3	3,130	56,900	105%
Shooters World Tactical Rifle	25.6	2,845	26.3	2,915	27.0	2,980	27.7	3,050	28.4	3,120	58,700	105%
Hodgdon H322	24.2	2,840	24.9	2,910	25.5	2,970	26.2	3,045	26.9	3,115	58,400	102%
Hodgdon H335	25.7	2,850	26.4	2,915	27.1	2,980	27.8	3,050	28.5	3,115	58,700	101%
IMR 4198	21.9	2,865	22.5	2,925	23.1	2,985	23.7	3,050	24.3	3,110	57,900	105%
Accurate LT-30	22.7	2,845	23.3	2,905	23.9	2,965	24.6	3,035	25.2	3,095	58,500	91%

75 gr Bullet · 25" barrel

COAL: 2.090" • Bullet length: 0.848" • Seat depth: 0.273" • Usable capacity: 28.9 / 32.0 gr H_2O

Powder	STEP 1 · 90%		STEP 2		STEP 3		STEP 4		STEP 5 · LIMIT			
	gr	fps	gr	fps	gr	fps	gr	fps	gr	fps	psi	Fill
Hodgdon CFE BLK	23.9	2,960	24.6	3,025	25.3	3,095	25.9	3,155	26.6	3,220	58,500	95%
Hodgdon Leverevolution	28.6	2,915	29.4	2,985	30.2	3,060	31.0	3,135	31.8	3,210	55,600	105%
Accurate 2460	26.9	2,910	27.6	2,970	28.4	3,045	29.1	3,105	29.9	3,180	58,300	104%
Vihtavuori N130	23.8	2,915	24.4	2,975	25.1	3,040	25.8	3,110	26.4	3,170	58,100	105%
Alliant Power Pro 1200-R	24.5	2,900	25.2	2,965	25.9	3,030	26.5	3,090	27.2	3,160	58,400	96%
Reload Swiss RS40	25.2	2,890	25.9	2,960	26.6	3,025	27.3	3,090	28.0	3,160	58,300	103%
Norma 200	23.9	2,895	24.5	2,950	25.2	3,020	25.9	3,090	26.5	3,150	58,200	99%
Accurate 2230	26.3	2,885	27.0	2,945	27.8	3,015	28.5	3,080	29.2	3,145	58,600	102%
Ramshot X-Terminator	25.9	2,865	26.6	2,925	27.4	2,995	28.1	3,060	28.8	3,125	58,400	101%
Accurate LT-32	24.3	2,850	25.0	2,920	25.6	2,975	26.3	3,045	27.0	3,110	58,500	103%
Hodgdon H4895	25.9	2,835	26.6	2,900	27.4	2,975	28.1	3,040	28.8	3,105	58,600	103%
Accurate 2015	24.9	2,830	25.6	2,900	26.3	2,965	27.0	3,030	27.7	3,100	58,300	99%
Accurate 2495	26.3	2,820	27.0	2,885	27.8	2,960	28.5	3,025	29.2	3,095	58,300	102%
Shooters World The Patriot	25.3	2,835	26.0	2,895	26.7	2,960	27.4	3,025	28.1	3,090	58,300	101%
Shooters World Tactical Rifle	25.7	2,795	26.4	2,865	27.1	2,930	27.9	3,005	28.6	3,070	58,300	102%
Alliant Reloder 7	22.6	2,820	23.2	2,875	23.9	2,945	24.5	3,005	25.1	3,060	58,700	92%
Hodgdon H322	24.5	2,805	25.2	2,870	25.9	2,935	26.5	2,995	27.2	3,060	58,700	100%
Hodgdon H335	25.8	2,795	26.5	2,860	27.3	2,930	28.0	2,995	28.7	3,060	58,500	98%
IMR 4320	27.1	2,770	27.9	2,845	28.6	2,910	29.4	2,985	30.1	3,050	58,000	105%
IMR 8208 XBR	25.2	2,775	25.9	2,840	26.6	2,905	27.3	2,970	28.0	3,035	55,500	105%

80 gr Bullet · 25" barrel

COAL: 2.060" • Bullet length: 0.904" • Seat depth: 0.359" • Usable capacity: 28.0 / 32.0 gr H_2O

Powder	STEP 1 · 90%		STEP 2		STEP 3		STEP 4		STEP 5 · LIMIT			
	gr	fps	gr	fps	gr	fps	gr	fps	gr	fps	psi	Fill
Hodgdon Leverevolution	27.6	2,810	28.4	2,880	29.1	2,945	29.9	3,020	30.7	3,095	55,600	105%
Hodgdon CFE BLK	23.0	2,830	23.6	2,885	24.3	2,955	25.0	3,025	25.6	3,080	58,300	94%
Accurate 2460	25.9	2,790	26.6	2,855	27.4	2,925	28.1	2,990	28.8	3,055	58,500	103%
Vihtavuori N130	23.0	2,805	23.6	2,860	24.3	2,930	24.9	2,990	25.5	3,050	58,700	105%
Alliant AR-Comp	24.7	2,780	25.4	2,845	26.0	2,905	26.7	2,970	27.4	3,035	55,900	105%
Alliant Power Pro 1200-R	23.6	2,785	24.3	2,850	24.9	2,905	25.6	2,975	26.2	3,035	58,500	95%
Reload Swiss RS40	24.3	2,775	25.0	2,845	25.6	2,900	26.3	2,965	27.0	3,035	58,200	103%
Shooters World AR Plus	24.4	2,765	25.1	2,830	25.8	2,895	26.4	2,955	27.1	3,020	58,300	98%
Accurate 2230	25.2	2,755	25.9	2,815	26.6	2,880	27.3	2,945	28.0	3,005	58,200	101%
Ramshot X-Terminator	24.9	2,745	25.6	2,805	26.3	2,870	27.0	2,930	27.7	2,995	58,500	100%
Alliant Reloder 10x	23.0	2,745	23.6	2,800	24.3	2,870	24.9	2,930	25.5	2,990	58,200	103%
Accurate 2015	24.1	2,725	24.8	2,795	25.5	2,860	26.1	2,915	26.8	2,985	58,700	99%
Accurate 2495	25.4	2,720	26.1	2,785	26.8	2,850	27.5	2,915	28.2	2,985	58,400	101%
Hodgdon H4895	24.9	2,725	25.6	2,790	26.3	2,855	27.0	2,920	27.7	2,985	58,200	103%
Shooters World The Patriot	24.4	2,720	25.1	2,785	25.8	2,850	26.4	2,905	27.1	2,970	58,600	101%
Hodgdon H335	24.9	2,690	25.6	2,750	26.3	2,815	27.0	2,880	27.7	2,945	58,500	98%
Hodgdon H322	23.6	2,690	24.3	2,755	24.9	2,815	25.6	2,880	26.2	2,940	58,600	99%
Alliant Reloder 7	21.7	2,695	22.3	2,755	22.9	2,810	23.5	2,870	24.1	2,930	58,500	92%
IMR 8208 XBR	24.3	2,675	25.0	2,740	25.6	2,795	26.3	2,860	27.0	2,925	55,800	105%
IMR 4198	21.1	2,665	21.7	2,725	22.3	2,785	22.8	2,835	23.4	2,890	58,300	101%

85 gr Bullet · 25" barrel

COAL: 2.035" • Bullet length: 0.940" • Seat depth: 0.420" • Usable capacity: 27.3 / 32.0 gr H_2O

Powder	STEP 1 · 90%		STEP 2		STEP 3		STEP 4		STEP 5 · LIMIT			
	gr	fps	gr	fps	gr	fps	gr	fps	gr	fps	psi	Fill
Hodgdon Leverevolution	27.0	2,740	27.8	2,815	28.5	2,880	29.3	2,950	30.0	3,015	56,100	105%
Hodgdon CFE BLK	22.4	2,735	23.0	2,795	23.6	2,850	24.3	2,920	24.9	2,975	58,500	94%
Accurate 2460	25.1	2,700	25.8	2,760	26.5	2,825	27.2	2,885	27.9	2,950	58,400	102%
Alliant AR-Comp	24.0	2,690	24.7	2,755	25.4	2,820	26.0	2,875	26.7	2,940	56,700	105%
Reload Swiss RS40	23.7	2,695	24.4	2,760	25.0	2,820	25.6	2,875	26.3	2,940	58,400	102%
Vihtavuori N130	22.2	2,700	22.8	2,755	23.4	2,815	24.1	2,880	24.7	2,940	58,600	104%
Alliant Power Pro 1200-R	22.9	2,690	23.5	2,750	24.1	2,805	24.8	2,875	25.4	2,930	58,400	95%
Accurate 2230	24.4	2,660	25.1	2,720	25.8	2,785	26.4	2,835	27.1	2,900	58,200	100%
Hodgdon H4895	24.3	2,650	25.0	2,715	25.6	2,770	26.3	2,835	27.0	2,900	58,700	102%
Accurate 2495	24.7	2,640	25.4	2,705	26.0	2,760	26.7	2,830	27.4	2,895	58,200	101%
Alliant Reloder 10x	22.3	2,650	22.9	2,710	23.6	2,780	24.2	2,835	24.8	2,895	58,300	102%
Ramshot X-Terminator	24.1	2,645	24.8	2,710	25.5	2,770	26.1	2,825	26.8	2,890	58,300	99%
Accurate 2015	23.4	2,635	24.0	2,695	24.7	2,760	25.4	2,825	26.0	2,880	58,200	99%
Shooters World Tactical Rifle	24.2	2,625	24.9	2,690	25.5	2,745	26.2	2,810	26.9	2,875	58,700	101%
IMR 4320	25.6	2,610	26.3	2,675	27.0	2,740	27.7	2,805	28.4	2,870	58,400	105%
Shooters World The Patriot	23.7	2,630	24.4	2,695	25.0	2,750	25.6	2,805	26.3	2,870	58,600	100%
Hodgdon H335	24.3	2,615	25.0	2,675	25.6	2,730	26.3	2,795	27.0	2,860	58,700	98%
Hodgdon H322	23.0	2,610	23.6	2,670	24.3	2,735	24.9	2,790	25.5	2,850	58,700	99%
IMR 8208 XBR	23.8	2,615	24.4	2,670	25.1	2,730	25.8	2,795	26.4	2,850	57,000	105%
IMR 4198	20.4	2,570	21.0	2,625	21.5	2,675	22.1	2,735	22.7	2,790	58,600	100%

90 gr Bullet · 25" barrel

COAL: 2.110" • Bullet length: 0.969" • Seat depth: 0.374" • Usable capacity: 27.8 / 32.0 gr H_2O

Powder	STEP 1 · 90%		STEP 2		STEP 3		STEP 4		STEP 5 · LIMIT			
	gr	fps	gr	fps	gr	fps	gr	fps	gr	fps	psi	Fill
Hodgdon Leverevolution	27.4	2,725	28.1	2,790	28.9	2,860	29.6	2,925	30.4	2,995	58,500	104%
Vihtavuori N530	24.3	2,685	25.0	2,750	25.6	2,805	26.3	2,865	27.0	2,930	58,600	104%
Hodgdon CFE BLK	22.2	2,640	22.8	2,700	23.4	2,755	24.1	2,820	24.7	2,875	58,300	91%
Accurate 2200	23.0	2,630	23.6	2,685	24.3	2,750	25.0	2,815	25.6	2,870	58,400	104%
Alliant AR-Comp	24.0	2,625	24.7	2,690	25.4	2,750	26.0	2,805	26.7	2,870	58,200	103%
Reload Swiss RS40	23.6	2,625	24.3	2,690	24.9	2,745	25.6	2,810	26.2	2,865	58,400	100%
Accurate 2460	24.8	2,610	25.5	2,670	26.2	2,730	26.9	2,795	27.6	2,855	58,200	99%
Hodgdon BL-C(2)	26.2	2,595	26.9	2,655	27.6	2,715	28.4	2,790	29.1	2,850	57,200	105%
Vihtavuori N135	24.2	2,610	24.9	2,670	25.5	2,720	26.2	2,785	26.9	2,845	55,900	105%
Alliant Reloder 10x	22.3	2,590	22.9	2,650	23.6	2,715	24.2	2,770	24.8	2,830	58,700	101%
Hodgdon Benchmark	23.8	2,595	24.4	2,645	25.1	2,710	25.8	2,770	26.4	2,825	58,200	105%
Accurate 2015	23.4	2,575	24.0	2,630	24.7	2,690	25.4	2,755	26.0	2,810	58,400	97%
Accurate 2230	24.1	2,570	24.8	2,630	25.5	2,690	26.1	2,745	26.8	2,805	58,500	98%
IMR 8208 XBR	23.9	2,570	24.5	2,625	25.2	2,685	25.9	2,745	26.5	2,800	58,700	103%
Ramshot X-Terminator	23.9	2,570	24.5	2,620	25.2	2,680	25.9	2,740	26.5	2,795	58,400	96%
Hodgdon H335	24.2	2,550	24.9	2,610	25.5	2,665	26.2	2,725	26.9	2,790	58,700	96%
Shooters World The Patriot	23.5	2,550	24.1	2,600	24.8	2,665	25.5	2,725	26.1	2,780	58,400	98%
Vihtavuori N133	22.9	2,550	23.5	2,605	24.1	2,660	24.8	2,720	25.4	2,775	56,100	105%
Hodgdon H322	22.9	2,540	23.5	2,595	24.1	2,650	24.8	2,715	25.4	2,770	58,600	97%
IMR 4198	20.3	2,490	20.9	2,545	21.4	2,595	21.9	2,640	22.5	2,700	58,600	97%

100 gr Bullet · 25" barrel

COAL: 2.170" • Bullet length: 1.052" • Seat depth: 0.397" • Usable capacity: 27.6 / 32.0 gr H_2O

Powder	STEP 1 · 90%		STEP 2		STEP 3		STEP 4		STEP 5 · LIMIT			
	gr	fps	gr	fps	gr	fps	gr	fps	gr	fps	psi	Fill
Hodgdon Leverevolution	26.6	2,590	27.4	2,660	28.1	2,720	28.9	2,785	29.6	2,850	58,600	102%
IMR 4895	24.9	2,515	25.6	2,575	26.3	2,635	27.0	2,695	27.7	2,755	58,300	104%
Vihtavuori N140	25.4	2,510	26.1	2,565	26.8	2,625	27.5	2,685	28.2	2,750	58,300	104%
Vihtavuori N530	23.2	2,520	23.9	2,580	24.5	2,635	25.1	2,685	25.8	2,750	58,700	100%
Accurate 2520	25.4	2,510	26.1	2,565	26.8	2,625	27.5	2,685	28.2	2,745	55,800	105%
Hodgdon Varget	24.9	2,500	25.6	2,560	26.3	2,625	27.0	2,685	27.7	2,745	58,500	104%
Ramshot TAC	24.5	2,500	25.2	2,560	25.9	2,620	26.5	2,675	27.2	2,735	55,900	105%
IMR 4064	24.4	2,465	25.1	2,525	25.8	2,585	26.4	2,635	27.1	2,695	57,800	105%
Vihtavuori N135	23.6	2,475	24.3	2,535	24.9	2,585	25.6	2,645	26.2	2,695	58,300	103%
IMR 4320	24.9	2,440	25.6	2,500	26.3	2,565	27.0	2,625	27.7	2,685	58,300	101%
Accurate 2460	23.9	2,450	24.6	2,510	25.3	2,565	25.9	2,620	26.6	2,680	58,700	96%
Shooters World The Creed	25.1	2,435	25.8	2,495	26.5	2,555	27.2	2,615	27.9	2,675	56,900	105%
Hodgdon Benchmark	23.0	2,445	23.6	2,495	24.3	2,555	24.9	2,610	25.5	2,660	58,700	102%
Accurate 2015	22.8	2,430	23.4	2,485	24.1	2,545	24.7	2,600	25.3	2,655	58,600	95%
IMR 8208 XBR	23.0	2,415	23.6	2,470	24.3	2,530	24.9	2,580	25.5	2,630	58,700	100%
Vihtavuori N133	22.3	2,410	22.9	2,465	23.6	2,525	24.2	2,580	24.8	2,630	58,300	103%
Hodgdon H335	23.4	2,400	24.0	2,450	24.7	2,510	25.4	2,570	26.0	2,625	58,300	93%
Accurate 2230	23.0	2,390	23.6	2,440	24.3	2,500	25.0	2,560	25.6	2,610	58,300	94%
Hodgdon H322	22.1	2,385	22.7	2,440	23.4	2,500	24.0	2,555	24.6	2,610	58,500	94%
Ramshot X-Terminator	22.9	2,395	23.5	2,445	24.1	2,495	24.8	2,555	25.4	2,605	58,400	93%

6mm Remington

Remington introduced the cartridge in 1955 as the .244 Remington. It was formed by necking down the .257 Roberts case to 6mm. The .257 Roberts was itself derived from the 7x57mm Mauser. Remington intended it mainly as a varmint and predator round and gave its rifles a 1:12-inch twist suited to bullets of 90 grains and lighter. The .243 Winchester was introduced the same year and loaded with heavier bullets suitable for deer. It outsold the Remington round. In 1963 Remington renamed the cartridge the 6mm Remington. The company also adopted a 1:9-inch twist that stabilizes heavier bullets. The cartridge itself was unchanged.

Factory loads typically use 80- to 100-grain bullets. The 6mm Remington has a slight ballistic advantage over the .243 Winchester and a longer neck. Yet it requires a standard-length action and never matched the .243's sales. It is used for varmints, pronghorn and deer. The cartridge remains popular with handloaders and custom rifle builders. Factory rifles and ammunition are less common than for the .243 Winchester.

Cartridge specifications	
Bullet Diameter	**0.243" (6.17 mm)**
Max Case Length	**2.233" (56.72 mm)**
Case Trim Length	**2.223" (56.46 mm)**
Max COAL	**2.825" (71.75 mm)**
Primer Pocket	**Large Rifle**
Standard Twist	**1:9"**
Case Capacity	**55.0 gr H_2O**
Max Pressure	**65,000 psi (SAAMI)**

55 gr Bullet · 25" barrel

COAL: 2.770" • Bullet length: 0.849" • Seat depth: 0.311" • Usable capacity: 51.9 / 55.0 gr H_2O

Powder	STEP 1 · 90%		STEP 2		STEP 3		STEP 4		STEP 5 · LIMIT			
	gr	fps	gr	fps	gr	fps	gr	fps	gr	fps	psi	Fill
Hodgdon Leverevolution	45.3	3,880	46.5	3,965	47.8	4,055	49.0	4,145	50.3	4,240	65,000	93%
Vihtavuori N540	44.3	3,830	45.5	3,915	46.8	4,005	48.0	4,085	49.2	4,170	64,900	101%
Hodgdon H4895	42.2	3,825	43.4	3,915	44.5	3,990	45.7	4,080	46.9	4,165	65,000	94%
Reload Swiss RS52	43.9	3,790	45.1	3,880	46.3	3,965	47.6	4,060	48.8	4,150	65,000	99%
Hodgdon CFE 223	45.0	3,790	46.3	3,880	47.5	3,965	48.8	4,060	50.0	4,145	64,900	98%
IMR 8208 XBR	42.0	3,800	43.2	3,885	44.4	3,975	45.5	4,050	46.7	4,140	64,700	98%
IMR 4895	42.8	3,775	44.0	3,860	45.1	3,940	46.3	4,025	47.5	4,110	64,700	95%
IMR 4064	43.3	3,765	44.5	3,850	45.7	3,935	46.9	4,020	48.1	4,105	64,800	99%
Hodgdon Varget	43.0	3,745	44.2	3,835	45.4	3,920	46.6	4,010	47.8	4,100	64,700	96%
Winchester StaBALL 6.5	48.6	3,710	50.0	3,810	51.3	3,900	52.6	3,995	54.0	4,095	62,900	105%
Alliant AR-Comp	40.1	3,770	41.2	3,850	42.4	3,930	43.5	4,010	44.6	4,090	65,000	92%
IMR 4166	42.1	3,745	43.3	3,830	44.5	3,915	45.6	3,995	46.8	4,085	64,800	100%
Alliant TS 15.5	43.4	3,720	44.6	3,805	45.8	3,895	47.0	3,985	48.2	4,070	64,900	100%
Alliant Reloder 15	42.9	3,710	44.1	3,790	45.3	3,875	46.5	3,960	47.7	4,050	64,900	98%
Accurate 2200	37.8	3,730	38.8	3,805	39.9	3,885	41.0	3,965	42.0	4,040	64,700	92%
Shooters World The Creed	43.8	3,685	45.0	3,770	46.3	3,865	47.5	3,950	48.7	4,035	64,900	98%
Shooters World Precision Rifle	43.0	3,675	44.2	3,760	45.4	3,845	46.6	3,935	47.8	4,025	64,700	102%
Accurate 4064	42.5	3,640	43.7	3,730	44.9	3,815	46.0	3,895	47.2	3,980	64,900	101%
Alliant Reloder 17	45.7	3,595	47.0	3,690	48.3	3,790	49.5	3,880	50.8	3,975	64,700	98%
Ramshot Big Game	45.1	3,615	46.4	3,705	47.6	3,790	48.9	3,880	50.1	3,965	64,700	98%

60 gr Bullet · 25" barrel

COAL: 2.700" • Bullet length: 0.793" • Seat depth: 0.326" • Usable capacity: 51.3 / 55.0 gr H_2O

Powder	STEP 1 · 90%		STEP 2		STEP 3		STEP 4		STEP 5 · LIMIT			
	gr	fps	gr	fps	gr	fps	gr	fps	gr	fps	psi	Fill
Hodgdon Leverevolution	44.2	3,740	45.4	3,825	46.7	3,915	47.9	4,000	49.1	4,085	64,800	91%
Vihtavuori N550	46.1	3,675	47.4	3,765	48.7	3,850	49.9	3,930	51.2	4,020	64,100	105%
Winchester StaBALL 6.5	48.1	3,640	49.4	3,730	50.8	3,825	52.1	3,920	53.4	4,010	64,700	105%
Reload Swiss RS52	42.9	3,660	44.1	3,745	45.3	3,835	46.5	3,920	47.7	4,005	64,900	98%
Vihtavuori N540	42.9	3,670	44.1	3,750	45.3	3,835	46.5	3,915	47.7	4,000	64,800	99%
Hodgdon CFE 223	43.9	3,655	45.1	3,735	46.3	3,820	47.6	3,910	48.8	3,995	64,700	97%
Hodgdon H4895	41.0	3,675	42.1	3,750	43.3	3,835	44.5	3,920	45.6	3,995	64,800	92%
Hodgdon Varget	42.0	3,625	43.2	3,710	44.4	3,795	45.5	3,875	46.7	3,960	65,000	95%
IMR 4064	42.1	3,630	43.3	3,715	44.5	3,795	45.6	3,875	46.8	3,955	64,800	98%
IMR 4895	41.6	3,630	42.8	3,715	43.9	3,795	45.1	3,875	46.2	3,955	64,900	93%
Hodgdon BL-C(2)	42.7	3,610	43.9	3,695	45.0	3,770	46.2	3,855	47.4	3,945	64,700	93%
Hodgdon SUPERFORMANCE	49.5	3,535	50.9	3,635	52.3	3,735	53.6	3,830	55.0	3,935	63,600	105%
IMR 3031	39.6	3,615	40.7	3,695	41.8	3,770	42.9	3,850	44.0	3,930	64,900	92%
Reload Swiss RS50	43.5	3,595	44.7	3,680	45.9	3,760	47.1	3,845	48.3	3,930	64,800	99%
Norma 202	40.9	3,605	42.0	3,680	43.1	3,755	44.3	3,840	45.4	3,915	64,700	96%
Alliant Reloder 15	41.7	3,575	42.9	3,655	44.0	3,735	45.1	3,810	46.3	3,895	64,800	96%
Hodgdon H380	44.6	3,540	45.8	3,625	47.0	3,710	48.3	3,800	49.5	3,885	64,800	102%
IMR 4320	41.6	3,555	42.8	3,640	43.9	3,720	45.1	3,805	46.2	3,885	64,700	91%
Vihtavuori N135	39.2	3,585	40.3	3,660	41.4	3,735	42.4	3,800	43.5	3,880	64,800	92%
Hodgdon H414	45.8	3,515	47.1	3,605	48.3	3,690	49.6	3,780	50.9	3,875	64,700	101%

65 gr Bullet · 25" barrel

COAL: 2.780" • Bullet length: 0.840" • Seat depth: 0.293" • Usable capacity: 51.7 / 55.0 gr H_2O

Powder	STEP 1 · 90%		STEP 2		STEP 3		STEP 4		STEP 5 · LIMIT			
	gr	fps	gr	fps	gr	fps	gr	fps	gr	fps	psi	Fill
Hodgdon Leverevolution	43.7	3,630	44.9	3,710	46.2	3,800	47.4	3,885	48.6	3,965	64,900	90%
Winchester StaBALL 6.5	47.7	3,560	49.0	3,645	50.4	3,740	51.7	3,825	53.0	3,915	64,600	103%
Hodgdon H4350	47.1	3,545	48.4	3,635	49.7	3,725	51.0	3,815	52.3	3,910	64,700	102%
Vihtavuori N550	45.5	3,580	46.8	3,665	48.0	3,740	49.3	3,825	50.5	3,905	64,900	103%
Reload Swiss RS52	42.6	3,570	43.8	3,655	45.0	3,735	46.1	3,815	47.3	3,900	65,000	96%
Hodgdon SUPERFORMANCE	49.5	3,505	50.9	3,600	52.3	3,700	53.6	3,790	55.0	3,890	64,700	104%
Hodgdon CFE 223	43.5	3,555	44.7	3,635	45.9	3,715	47.1	3,795	48.3	3,875	64,700	95%
Hodgdon H4895	40.5	3,560	41.6	3,635	42.8	3,715	43.9	3,790	45.0	3,865	64,900	90%
Hodgdon Varget	41.5	3,525	42.6	3,600	43.8	3,685	45.0	3,765	46.1	3,840	64,700	93%
IMR 4064	41.5	3,525	42.6	3,600	43.8	3,680	45.0	3,760	46.1	3,835	64,700	95%
IMR 4895	41.0	3,520	42.1	3,595	43.3	3,675	44.4	3,750	45.5	3,830	65,000	91%
Ramshot TAC	40.1	3,510	41.2	3,585	42.3	3,660	43.4	3,735	44.5	3,810	65,000	92%
Reload Swiss RS50	43.0	3,490	44.2	3,570	45.4	3,650	46.6	3,730	47.8	3,810	64,700	97%
Norma 203B	41.5	3,480	42.6	3,555	43.8	3,635	45.0	3,720	46.1	3,795	64,800	97%
IMR 4320	41.3	3,465	42.4	3,545	43.6	3,625	44.8	3,710	45.9	3,785	64,900	89%
Alliant Reloder 15	41.0	3,465	42.1	3,540	43.3	3,620	44.5	3,700	45.6	3,775	64,900	94%
Alliant Power Pro Varmint	40.1	3,465	41.2	3,535	42.4	3,620	43.5	3,690	44.6	3,765	64,700	91%
Ramshot Big Game	43.7	3,415	44.9	3,495	46.2	3,580	47.4	3,660	48.6	3,740	64,900	96%
Alliant Power Pro 4000-MR	47.0	3,385	48.3	3,470	49.6	3,555	50.9	3,645	52.2	3,735	64,900	103%
Vihtavuori N140	40.6	3,430	41.7	3,505	42.9	3,585	44.0	3,660	45.1	3,735	64,800	89%

70 gr Bullet · 25" barrel

COAL: 2.775" • Bullet length: 0.872" • Seat depth: 0.329" • Usable capacity: 51.3 / 55.0 gr H_2O

Powder	STEP 1 · 90%		STEP 2		STEP 3		STEP 4		STEP 5 · LIMIT			
	gr	fps	gr	fps	gr	fps	gr	fps	gr	fps	psi	Fill
Hodgdon Leverevolution	42.8	3,515	44.0	3,595	45.2	3,675	46.4	3,755	47.6	3,840	64,900	89%
Winchester StaBALL 6.5	46.9	3,470	48.2	3,555	49.5	3,640	50.8	3,725	52.1	3,810	64,800	102%
Hodgdon H4350	46.1	3,455	47.4	3,545	48.7	3,635	49.9	3,715	51.2	3,805	64,700	101%
Hodgdon SUPERFORMANCE	48.7	3,435	50.1	3,530	51.4	3,615	52.8	3,715	54.1	3,805	64,700	103%
Accurate 2700	45.5	3,430	46.8	3,515	48.0	3,600	49.3	3,685	50.6	3,775	64,900	101%
Vihtavuori N550	44.3	3,460	45.5	3,535	46.8	3,620	48.0	3,695	49.2	3,775	65,000	101%
Reload Swiss RS52	41.7	3,460	42.9	3,540	44.0	3,615	45.1	3,690	46.3	3,770	64,700	95%
Hodgdon CFE 223	42.6	3,440	43.8	3,520	45.0	3,600	46.1	3,670	47.3	3,750	64,800	94%
Hodgdon Varget	40.6	3,415	41.7	3,490	42.9	3,570	44.0	3,645	45.1	3,720	64,700	91%
Vihtavuori N540	41.0	3,415	42.1	3,485	43.3	3,565	44.5	3,640	45.6	3,715	64,700	94%
IMR 8208 XBR	39.3	3,420	40.4	3,490	41.5	3,565	42.6	3,635	43.7	3,710	64,800	92%
Alliant Reloder 17	43.8	3,365	45.0	3,445	46.3	3,535	47.5	3,620	48.7	3,705	64,800	95%
Hodgdon H414	44.7	3,360	46.0	3,445	47.2	3,525	48.5	3,615	49.7	3,695	64,900	99%
IMR 4895	39.9	3,395	41.0	3,470	42.1	3,540	43.2	3,615	44.3	3,690	64,700	89%
IMR 4350	45.1	3,345	46.4	3,430	47.6	3,510	48.9	3,600	50.1	3,680	62,800	105%
Norma 203B	40.6	3,375	41.7	3,450	42.9	3,530	44.0	3,605	45.1	3,680	64,900	95%
Reload Swiss RS70	48.0	3,290	49.3	3,375	50.6	3,465	52.0	3,560	53.3	3,650	63,900	105%
Alliant Reloder 15	40.0	3,350	41.1	3,425	42.2	3,495	43.3	3,570	44.4	3,640	64,700	92%
Ramshot Hunter	45.5	3,305	46.8	3,390	48.0	3,470	49.3	3,555	50.6	3,640	61,200	105%
Ramshot Big Game	42.8	3,315	44.0	3,395	45.2	3,470	46.4	3,550	47.6	3,630	64,800	95%

75 gr Bullet · 25" barrel

COAL: 2.775" • Bullet length: 0.848" • Seat depth: 0.306" • Usable capacity: 51.5 / 55.0 gr H_2O

Powder	STEP 1 · 90%		STEP 2		STEP 3		STEP 4		STEP 5 · LIMIT			
	gr	fps	gr	fps	gr	fps	gr	fps	gr	fps	psi	Fill
Hodgdon SUPERFORMANCE	48.3	3,375	49.6	3,460	51.0	3,550	52.4	3,645	53.7	3,735	64,600	102%
Hodgdon Leverevolution	42.3	3,415	43.5	3,495	44.6	3,565	45.8	3,645	47.0	3,725	65,000	87%
Hodgdon H4350	45.5	3,380	46.8	3,465	48.0	3,545	49.3	3,630	50.6	3,720	64,700	99%
Winchester StaBALL 6.5	46.4	3,385	47.7	3,465	49.0	3,550	50.3	3,635	51.6	3,715	64,800	101%
Accurate 4350	46.3	3,370	47.6	3,455	48.8	3,530	50.1	3,620	51.4	3,705	64,800	104%
Accurate 2700	45.2	3,360	46.5	3,440	47.7	3,520	49.0	3,605	50.2	3,685	65,000	99%
IMR 4451	45.8	3,340	47.1	3,425	48.3	3,505	49.6	3,590	50.9	3,680	64,900	103%
Vihtavuori N550	43.4	3,350	44.6	3,420	45.8	3,495	47.0	3,570	48.2	3,645	64,800	98%
Hodgdon H4895	39.0	3,330	40.1	3,400	41.1	3,465	42.2	3,540	43.3	3,610	65,000	87%
Hodgdon Varget	40.1	3,320	41.2	3,395	42.3	3,465	43.4	3,540	44.5	3,610	64,700	90%
Winchester 760	44.4	3,290	45.6	3,365	46.8	3,445	48.1	3,530	49.3	3,605	64,700	98%
IMR 4064	40.0	3,315	41.1	3,385	42.2	3,460	43.3	3,530	44.4	3,600	64,900	92%
Vihtavuori N540	40.3	3,305	41.4	3,375	42.5	3,445	43.7	3,520	44.8	3,590	64,900	92%
Hodgdon H380	42.7	3,270	43.9	3,350	45.0	3,420	46.2	3,495	47.4	3,575	64,700	98%
Shooters World The Creed	40.9	3,280	42.0	3,350	43.1	3,420	44.3	3,500	45.4	3,575	65,000	92%
IMR 4320	40.1	3,275	41.2	3,345	42.4	3,425	43.5	3,500	44.6	3,570	64,900	87%
Hodgdon Hybrid 100V	43.4	3,240	44.6	3,320	45.8	3,400	47.0	3,485	48.2	3,565	62,000	105%
Norma MRP	46.8	3,200	48.1	3,285	49.4	3,365	50.7	3,450	52.0	3,535	61,200	105%
Ramshot Big Game	42.4	3,235	43.6	3,310	44.8	3,390	45.9	3,460	47.1	3,535	65,000	93%
Alliant Reloder 15	39.3	3,250	40.4	3,320	41.5	3,390	42.6	3,460	43.7	3,530	65,000	90%

80 gr Bullet · 25" barrel

COAL: 2.770" • Bullet length: 0.973" • Seat depth: 0.436" • Usable capacity: 50.1 / 55.0 gr H_2O

Powder	STEP 1 · 90%		STEP 2		STEP 3		STEP 4		STEP 5 · LIMIT			
	gr	fps	gr	fps	gr	fps	gr	fps	gr	fps	psi	Fill
Hodgdon SUPERFORMANCE	47.0	3,285	48.3	3,370	49.6	3,455	50.9	3,545	52.2	3,630	64,900	102%
Hodgdon H4350	44.1	3,285	45.3	3,360	46.5	3,440	47.8	3,525	49.0	3,605	65,000	99%
Winchester StaBALL 6.5	45.0	3,275	46.3	3,360	47.5	3,435	48.8	3,520	50.0	3,595	64,700	101%
Accurate 4350	44.8	3,265	46.0	3,340	47.3	3,425	48.5	3,505	49.8	3,590	64,700	104%
Hodgdon Leverevolution	40.9	3,295	42.0	3,365	43.1	3,440	44.3	3,515	45.4	3,590	64,700	87%
IMR 4451	44.4	3,240	45.6	3,320	46.8	3,400	48.1	3,485	49.3	3,565	64,700	102%
Accurate 2700	43.7	3,245	44.9	3,320	46.2	3,405	47.4	3,480	48.6	3,560	64,700	99%
IMR 4350	43.7	3,210	44.9	3,290	46.1	3,365	47.3	3,445	48.5	3,525	64,900	104%
Alliant Reloder 17	42.2	3,200	43.4	3,280	44.5	3,355	45.7	3,435	46.9	3,520	64,900	94%
Vihtavuori N550	41.9	3,230	43.0	3,300	44.2	3,370	45.4	3,445	46.5	3,515	64,900	98%
Hodgdon CFE 223	40.7	3,220	41.8	3,290	43.0	3,370	44.1	3,440	45.2	3,510	65,000	92%
Ramshot Hunter	44.6	3,195	45.8	3,270	47.0	3,345	48.3	3,430	49.5	3,510	64,100	105%
Hodgdon H414	42.9	3,185	44.1	3,260	45.3	3,335	46.5	3,415	47.7	3,495	64,900	97%
Hodgdon Varget	38.7	3,200	39.8	3,270	40.9	3,345	41.9	3,410	43.0	3,480	64,700	89%
IMR 4064	38.5	3,190	39.6	3,260	40.6	3,325	41.7	3,395	42.8	3,465	64,800	91%
Alliant Power Pro 4000-MR	44.5	3,145	45.7	3,225	47.0	3,305	48.2	3,385	49.4	3,460	64,700	100%
IMR 4831	44.0	3,130	45.2	3,210	46.5	3,295	47.7	3,375	48.9	3,460	63,400	105%
IMR 8208 XBR	37.4	3,190	38.4	3,255	39.5	3,325	40.5	3,390	41.5	3,455	64,900	90%
Reload Swiss RS50	40.4	3,170	41.5	3,240	42.6	3,310	43.8	3,385	44.9	3,455	64,700	94%
Norma MRP	45.5	3,120	46.8	3,200	48.0	3,275	49.3	3,360	50.5	3,440	61,500	105%

85 gr Bullet · 25" barrel

COAL: 2.775" • Bullet length: 0.961" • Seat depth: 0.419" • Usable capacity: 50.3 / 55.0 gr H_2O

Powder	STEP 1 · 90%		STEP 2		STEP 3		STEP 4		STEP 5 · LIMIT			
	gr	fps	gr	fps	gr	fps	gr	fps	gr	fps	psi	Fill
Hodgdon SUPERFORMANCE	46.6	3,230	47.9	3,310	49.2	3,395	50.5	3,475	51.8	3,560	64,700	101%
Hodgdon H4350	43.6	3,215	44.8	3,290	46.0	3,370	47.2	3,445	48.4	3,525	64,800	97%
Accurate 4350	44.5	3,205	45.7	3,280	47.0	3,365	48.2	3,440	49.4	3,520	64,700	103%
Winchester StaBALL 6.5	44.6	3,205	45.9	3,285	47.1	3,360	48.4	3,440	49.6	3,515	64,900	99%
IMR 4451	44.1	3,185	45.3	3,260	46.5	3,335	47.8	3,420	49.0	3,500	64,900	101%
Hodgdon Leverevolution	40.4	3,205	41.5	3,275	42.6	3,345	43.8	3,425	44.9	3,495	64,900	85%
Accurate 2700	43.4	3,180	44.6	3,255	45.8	3,330	47.0	3,405	48.2	3,485	64,600	98%
Norma URP	42.8	3,165	44.0	3,245	45.1	3,315	46.3	3,395	47.5	3,475	64,900	104%
Alliant Reloder 17	41.9	3,145	43.1	3,220	44.3	3,300	45.4	3,370	46.6	3,450	65,000	93%
IMR 4831	44.1	3,105	45.3	3,185	46.5	3,260	47.8	3,350	49.0	3,430	64,800	104%
Hodgdon H414	42.6	3,125	43.8	3,200	45.0	3,275	46.1	3,345	47.3	3,420	64,900	96%
Winchester 760	42.7	3,125	43.9	3,200	45.0	3,265	46.2	3,345	47.4	3,420	64,800	97%
Alliant Reloder 16	41.9	3,125	43.1	3,200	44.3	3,275	45.4	3,340	46.6	3,415	64,800	103%
Hodgdon CFE 223	40.1	3,130	41.2	3,200	42.4	3,275	43.5	3,340	44.6	3,410	64,800	90%
Alliant Power Pro 4000-MR	44.2	3,090	45.4	3,165	46.7	3,245	47.9	3,320	49.1	3,400	64,900	99%
Alliant Reloder 19	44.7	3,070	46.0	3,155	47.2	3,230	48.5	3,315	49.7	3,395	62,500	105%
Hodgdon Varget	38.3	3,120	39.3	3,185	40.4	3,255	41.5	3,325	42.5	3,390	64,800	88%
Hodgdon H4895	37.1	3,110	38.1	3,175	39.2	3,245	40.2	3,310	41.2	3,370	64,900	85%
IMR 4064	38.0	3,105	39.0	3,170	40.1	3,235	41.2	3,305	42.2	3,370	64,700	90%
Reload Swiss RS50	40.1	3,100	41.2	3,165	42.3	3,235	43.4	3,300	44.5	3,370	65,000	93%

90 gr Bullet · 25" barrel

COAL: 2.825" • Bullet length: 1.066" • Seat depth: 0.473" • Usable capacity: 49.7 / 55.0 gr H_2O

Powder	STEP 1 · 90%		STEP 2		STEP 3		STEP 4		STEP 5 · LIMIT			
	gr	fps	gr	fps	gr	fps	gr	fps	gr	fps	psi	Fill
Hodgdon SUPERFORMANCE	45.8	3,160	47.1	3,240	48.3	3,315	49.6	3,400	50.9	3,485	64,900	100%
Accurate 4350	43.7	3,135	44.9	3,210	46.1	3,285	47.3	3,360	48.5	3,435	64,800	102%
Hodgdon H4350	42.7	3,140	43.9	3,215	45.0	3,285	46.2	3,360	47.4	3,435	64,900	96%
Alliant Reloder 26	46.7	3,100	48.0	3,175	49.3	3,260	50.6	3,340	51.9	3,425	62,200	105%
Winchester StaBALL 6.5	43.7	3,120	44.9	3,195	46.2	3,275	47.4	3,345	48.6	3,420	64,700	99%
IMR 4451	43.3	3,110	44.5	3,185	45.7	3,260	46.9	3,340	48.1	3,415	64,900	101%
Accurate 2700	42.6	3,100	43.8	3,175	45.0	3,250	46.1	3,320	47.3	3,395	64,700	97%
Reload Swiss RS70	45.4	3,065	46.6	3,140	47.9	3,220	49.1	3,295	50.4	3,380	64,900	102%
IMR 4350	42.2	3,065	43.4	3,135	44.5	3,205	45.7	3,280	46.9	3,355	64,700	101%
IMR 4831	43.4	3,045	44.6	3,125	45.8	3,200	47.0	3,280	48.2	3,355	64,900	104%
Hodgdon H414	41.8	3,050	42.9	3,115	44.1	3,190	45.3	3,265	46.4	3,335	65,000	95%
IMR 7828SSC	45.2	3,025	46.5	3,105	47.7	3,180	49.0	3,260	50.2	3,335	64,700	105%
Winchester 760	41.9	3,050	43.0	3,115	44.2	3,190	45.4	3,265	46.5	3,335	64,900	96%
IMR 7828	45.9	3,005	47.2	3,085	48.5	3,165	49.7	3,240	51.0	3,325	64,900	103%
Vihtavuori N160	43.3	3,035	44.5	3,105	45.7	3,180	46.9	3,250	48.1	3,325	64,700	105%
Vihtavuori N550	40.1	3,040	41.2	3,105	42.4	3,180	43.5	3,245	44.6	3,310	65,000	94%
Hodgdon Varget	37.4	3,025	38.5	3,095	39.5	3,160	40.5	3,225	41.6	3,295	65,000	87%
IMR 4064	37.2	3,020	38.2	3,080	39.3	3,150	40.3	3,210	41.3	3,275	65,000	89%
Hodgdon H4831SC	43.7	2,970	44.9	3,045	46.1	3,115	47.3	3,190	48.5	3,265	64,800	98%
Winchester Supreme 780	46.6	2,940	47.9	3,015	49.2	3,095	50.5	3,180	51.8	3,260	61,700	105%

95 gr Bullet · 25" barrel

COAL: 2.810" • Bullet length: 1.129" • Seat depth: 0.552" • Usable capacity: 49.0 / 55.0 gr H_2O

Powder	STEP 1 · 90%		STEP 2		STEP 3		STEP 4		STEP 5 · LIMIT			
	gr	fps	gr	fps	gr	fps	gr	fps	gr	fps	psi	Fill
Hodgdon SUPERFORMANCE	44.9	3,090	46.1	3,165	47.4	3,245	48.6	3,320	49.9	3,400	64,700	100%
Alliant Reloder 26	46.1	3,050	47.4	3,130	48.7	3,210	49.9	3,285	51.2	3,370	63,200	105%
Accurate 4350	42.8	3,060	44.0	3,135	45.1	3,200	46.3	3,275	47.5	3,350	64,700	101%
Hodgdon H4350	41.7	3,060	42.9	3,135	44.0	3,200	45.1	3,270	46.3	3,345	64,700	95%
Winchester StaBALL 6.5	42.9	3,050	44.1	3,120	45.3	3,190	46.5	3,265	47.7	3,340	65,000	98%
Vihtavuori N555	43.1	3,040	44.3	3,110	45.5	3,185	46.7	3,260	47.9	3,335	64,000	105%
IMR 4451	42.4	3,035	43.6	3,110	44.8	3,185	45.9	3,255	47.1	3,330	64,600	100%
Ramshot Hunter	42.8	3,000	44.0	3,075	45.1	3,140	46.3	3,215	47.5	3,290	64,900	103%
Alliant Reloder 17	40.3	2,995	41.4	3,065	42.5	3,135	43.7	3,215	44.8	3,285	64,700	92%
Alliant Reloder 19	43.6	2,985	44.8	3,060	46.0	3,135	47.2	3,210	48.4	3,285	64,300	105%
IMR 4831	42.6	2,985	43.8	3,060	45.0	3,135	46.1	3,205	47.3	3,285	64,900	104%
Norma MRP	44.2	2,985	45.4	3,055	46.7	3,135	47.9	3,210	49.1	3,285	64,700	104%
IMR 4350	41.3	2,990	42.4	3,055	43.6	3,130	44.8	3,205	45.9	3,275	64,800	101%
Alliant Reloder 23	42.7	2,985	43.9	3,055	45.0	3,120	46.2	3,195	47.4	3,270	63,100	105%
IMR 7828SSC	44.3	2,965	45.5	3,040	46.8	3,120	48.0	3,190	49.2	3,265	64,900	104%
IMR 7828	44.9	2,945	46.1	3,020	47.4	3,095	48.6	3,170	49.9	3,255	64,700	102%
Vihtavuori N160	42.4	2,960	43.6	3,035	44.8	3,105	45.9	3,170	47.1	3,245	64,800	104%
Vihtavuori N550	39.2	2,960	40.3	3,025	41.4	3,090	42.4	3,150	43.5	3,215	65,000	93%
Hodgdon H4831SC	42.8	2,905	44.0	2,975	45.2	3,050	46.4	3,125	47.6	3,195	64,800	98%
Vihtavuori N540	36.4	2,900	37.4	2,960	38.4	3,020	39.4	3,080	40.4	3,140	64,900	88%

100 gr Bullet · 25" barrel

COAL: 2.776" • Bullet length: 1.066" • Seat depth: 0.523" • Usable capacity: 49.1 / 55.0 gr H_2O

Powder	STEP 1 · 90%		STEP 2		STEP 3		STEP 4		STEP 5 · LIMIT			
	gr	fps	gr	fps	gr	fps	gr	fps	gr	fps	psi	Fill
Alliant Reloder 26	46.0	3,015	47.3	3,090	48.5	3,165	49.8	3,245	51.1	3,325	64,800	104%
Hodgdon SUPERFORMANCE	44.5	3,025	45.7	3,100	47.0	3,180	48.2	3,250	49.4	3,325	64,800	98%
Accurate 4350	42.3	2,985	43.5	3,060	44.6	3,125	45.8	3,200	47.0	3,270	65,000	100%
Hodgdon H4350	41.1	2,980	42.3	3,050	43.4	3,120	44.6	3,195	45.7	3,260	64,900	94%
Vihtavuori N555	42.5	2,975	43.7	3,045	44.9	3,120	46.0	3,185	47.2	3,260	64,800	103%
IMR 4451	42.0	2,965	43.2	3,040	44.4	3,115	45.5	3,180	46.7	3,255	65,000	99%
Reload Swiss RS62	42.8	2,950	44.0	3,025	45.2	3,100	46.4	3,175	47.6	3,250	64,800	101%
Alliant Reloder 19	43.3	2,935	44.5	3,005	45.7	3,080	46.9	3,155	48.1	3,230	64,900	104%
Alliant Reloder 22	43.7	2,935	44.9	3,005	46.1	3,080	47.3	3,150	48.5	3,225	63,300	105%
Hodgdon Hybrid 100V	40.7	2,935	41.8	3,005	43.0	3,080	44.1	3,150	45.2	3,220	64,800	103%
Ramshot Hunter	42.2	2,925	43.4	2,995	44.5	3,060	45.7	3,130	46.9	3,205	64,700	101%
Winchester Supreme 780	46.1	2,890	47.4	2,965	48.7	3,045	49.9	3,115	51.2	3,195	64,800	105%
IMR 4350	40.7	2,910	41.8	2,980	43.0	3,050	44.1	3,115	45.2	3,185	64,700	99%
IMR 7828SSC	43.7	2,900	44.9	2,970	46.1	3,040	47.3	3,115	48.5	3,185	64,700	103%
Hodgdon H414	40.4	2,895	41.5	2,960	42.6	3,030	43.8	3,100	44.9	3,170	65,000	93%
Alliant Power Pro 4000-MR	42.1	2,885	43.3	2,955	44.5	3,025	45.6	3,095	46.8	3,165	64,900	97%
Winchester 760	40.5	2,895	41.6	2,960	42.8	3,035	43.9	3,100	45.0	3,165	64,900	94%
Vihtavuori N160	41.8	2,885	42.9	2,945	44.1	3,020	45.3	3,090	46.4	3,155	64,700	102%
Alliant Reloder 16	39.4	2,880	40.5	2,945	41.6	3,010	42.7	3,075	43.8	3,140	65,000	99%
IMR 4064	35.6	2,835	36.6	2,895	37.6	2,955	38.6	3,015	39.6	3,075	64,700	86%

105 gr Bullet · 25" barrel

COAL: 2.810" • Bullet length: 1.232" • Seat depth: 0.655" • Usable capacity: 47.9 / 55.0 gr H_2O

Powder	STEP 1 · 90%		STEP 2		STEP 3		STEP 4		STEP 5 · LIMIT			
	gr	fps	gr	fps	gr	fps	gr	fps	gr	fps	psi	Fill
Alliant Reloder 26	44.8	2,945	46.0	3,015	47.3	3,095	48.5	3,170	49.8	3,250	64,700	104%
Hodgdon SUPERFORMANCE	43.4	2,955	44.6	3,030	45.8	3,100	47.0	3,175	48.2	3,250	64,800	98%
Accurate 4350	41.2	2,915	42.4	2,985	43.5	3,050	44.6	3,120	45.8	3,190	64,900	100%
Vihtavuori N555	41.3	2,905	42.4	2,970	43.6	3,040	44.8	3,115	45.9	3,180	64,700	103%
Hodgdon H4350	40.0	2,910	41.1	2,975	42.2	3,040	43.3	3,110	44.4	3,175	64,700	93%
Reload Swiss RS62	41.8	2,890	42.9	2,955	44.1	3,030	45.3	3,105	46.4	3,175	64,700	101%
Norma URP	39.4	2,890	40.5	2,955	41.6	3,025	42.7	3,095	43.8	3,165	64,800	100%
Alliant Reloder 19	42.2	2,870	43.4	2,940	44.5	3,010	45.7	3,085	46.9	3,160	64,900	104%
Winchester StaBALL 6.5	41.2	2,890	42.4	2,960	43.5	3,025	44.6	3,090	45.8	3,160	64,700	96%
Alliant Reloder 22	42.6	2,870	43.8	2,940	45.0	3,015	46.1	3,080	47.3	3,155	63,400	105%
Hodgdon Hybrid 100V	39.7	2,870	40.8	2,935	41.9	3,005	43.0	3,075	44.1	3,145	64,900	103%
Alliant Reloder 23	41.5	2,865	42.6	2,930	43.8	3,000	45.0	3,075	46.1	3,140	64,700	104%
IMR 4831	41.1	2,855	42.3	2,930	43.4	2,995	44.6	3,070	45.7	3,140	64,800	102%
Ramshot Hunter	41.1	2,850	42.3	2,925	43.4	2,990	44.6	3,060	45.7	3,125	64,600	101%
IMR 7828SSC	42.6	2,840	43.8	2,910	45.0	2,980	46.1	3,045	47.3	3,120	65,000	103%
IMR 7828	43.2	2,825	44.4	2,895	45.6	2,970	46.8	3,040	48.0	3,115	64,900	101%
IMR 4350	39.6	2,840	40.7	2,905	41.8	2,970	42.9	3,040	44.0	3,105	64,800	99%
Winchester 760	39.4	2,820	40.5	2,890	41.6	2,955	42.7	3,020	43.8	3,085	64,700	94%
Hodgdon H4831SC	41.3	2,780	42.4	2,845	43.6	2,915	44.8	2,985	45.9	3,050	64,800	96%
Shooters World SW4350	41.0	2,775	42.1	2,840	43.3	2,910	44.5	2,980	45.6	3,045	64,800	103%

6mm XC

The 6mm XC is often called the 6XC. David Tubb developed it as a wildcat for NRA High Power match shooting. Tubb is an 11-time NRA National High Power Rifle Champion. The cartridge grew out of his earlier 6mmX. That round was made by forming .22-250 Remington brass in a chamber cut with a .243 Winchester reamer held short. The 6XC uses a slightly shorter case body and a 30-degree shoulder. It is designed to handle bullets heavier than 100 grains.

Norma later produced 6XC brass in partnership with Tubb's company Superior Shooting Systems. The cartridge is standardized by the Commission Internationale Permanente (C.I.P.) but not by SAAMI. Typical match loads drive 115-grain bullets at about 3,000 fps. Tubb won several NRA High Power National Championships and long-range championship events with the 6XC. The cartridge has been used in across-the-course and long-range target competition.

Cartridge specifications	
Bullet Diameter	**0.243" (6.17 mm)**
Max Case Length	**1.902" (48.30 mm)**
Case Trim Length	**1.892" (48.05 mm)**
Max COAL	**2.756" (70.00 mm)**
Primer Pocket	**Large Rifle**
Standard Twist	**1:8"**
Case Capacity	**49.0 gr H_2O**
Max Pressure	**4,400 bar / 63,817 psi (C.I.P.)**

60 gr Bullet · 25" barrel

COAL: 2.421" • Bullet length: 0.763" • Seat depth: 0.243" • Usable capacity: 46.3 / 49.0 gr H_2O

Powder	STEP 1 · 90%		STEP 2		STEP 3		STEP 4		STEP 5 · LIMIT			
	gr	fps	gr	fps	gr	fps	gr	fps	gr	fps	psi	Fill
Vihtavuori N540	40.1	3,695	41.2	3,775	42.4	3,865	43.5	3,950	44.6	4,030	63,600	102%
Hodgdon Leverevolution	40.2	3,675	41.3	3,760	42.5	3,855	43.6	3,940	44.7	4,025	63,700	92%
Accurate 2520	38.7	3,625	39.8	3,705	40.9	3,790	41.9	3,865	43.0	3,945	63,800	96%
Hodgdon CFE 223	40.0	3,595	41.1	3,680	42.2	3,765	43.3	3,845	44.4	3,930	63,600	98%
Reload Swiss RS52	39.0	3,595	40.1	3,680	41.1	3,755	42.2	3,845	43.3	3,930	63,800	98%
Alliant Reloder 15	39.1	3,600	40.2	3,680	41.3	3,765	42.3	3,840	43.4	3,925	63,800	100%
Hodgdon BL-C(2)	39.3	3,580	40.4	3,665	41.5	3,750	42.6	3,835	43.7	3,920	63,700	95%
IMR 4895	37.9	3,580	39.0	3,665	40.0	3,740	41.0	3,815	42.1	3,900	63,500	94%
Vihtavuori N140	38.7	3,570	39.8	3,655	40.9	3,740	41.9	3,815	43.0	3,900	63,500	95%
Ramshot Big Game	41.8	3,550	42.9	3,635	44.1	3,725	45.3	3,815	46.4	3,895	63,600	102%
Vihtavuori N150	39.0	3,565	40.1	3,645	41.1	3,725	42.2	3,805	43.3	3,895	63,700	105%
Hodgdon Varget	38.1	3,555	39.1	3,630	40.2	3,720	41.3	3,805	42.3	3,885	63,500	95%
Alliant AR-Comp	35.6	3,585	36.6	3,660	37.5	3,730	38.5	3,805	39.5	3,880	63,700	91%
Winchester StaBALL 6.5	43.3	3,515	44.5	3,605	45.7	3,695	46.9	3,785	48.1	3,875	61,800	105%
Hodgdon H4895	36.5	3,565	37.5	3,640	38.5	3,720	39.5	3,795	40.5	3,870	63,400	91%
IMR 4064	38.0	3,545	39.0	3,620	40.1	3,705	41.2	3,790	42.2	3,865	63,600	98%
Hodgdon Benchmark	35.6	3,535	36.6	3,615	37.6	3,690	38.6	3,765	39.6	3,845	63,600	94%
IMR 4166	37.0	3,525	38.0	3,600	39.0	3,680	40.1	3,765	41.1	3,845	63,700	99%
Norma 203B	38.1	3,495	39.1	3,575	40.2	3,660	41.3	3,745	42.3	3,825	63,700	99%
Winchester 760	41.7	3,440	42.9	3,525	44.0	3,610	45.1	3,690	46.3	3,785	63,700	103%

70 gr Bullet · 25" barrel

COAL: 2.525" • Bullet length: 0.866" • Seat depth: 0.243" • Usable capacity: 46.3 / 49.0 gr H_2O

Powder	STEP 1 · 90%		STEP 2		STEP 3		STEP 4		STEP 5 · LIMIT			
	gr	fps	gr	fps	gr	fps	gr	fps	gr	fps	psi	Fill
Hodgdon Leverevolution	39.1	3,475	40.2	3,555	41.3	3,640	42.3	3,710	43.4	3,790	63,700	90%
Vihtavuori N540	38.4	3,450	39.5	3,525	40.5	3,595	41.6	3,675	42.7	3,755	63,700	98%
Vihtavuori N550	40.9	3,435	42.0	3,510	43.1	3,590	44.3	3,675	45.4	3,750	63,500	103%
Winchester StaBALL 6.5	42.7	3,395	43.9	3,480	45.0	3,560	46.2	3,645	47.4	3,730	63,500	103%
Reload Swiss RS52	37.9	3,400	39.0	3,485	40.0	3,555	41.0	3,630	42.1	3,715	63,700	96%
Hodgdon BL-C(2)	38.3	3,395	39.4	3,475	40.5	3,555	41.5	3,630	42.6	3,710	63,700	92%
Hodgdon CFE 223	38.8	3,395	39.9	3,475	41.0	3,555	42.0	3,625	43.1	3,705	63,600	95%
Ramshot Big Game	40.7	3,380	41.8	3,455	43.0	3,540	44.1	3,620	45.2	3,700	63,700	99%
Winchester 748	37.6	3,380	38.6	3,455	39.7	3,535	40.8	3,615	41.8	3,690	63,700	93%
Accurate 2520	37.2	3,380	38.2	3,450	39.3	3,530	40.3	3,600	41.3	3,675	63,500	92%
Alliant Reloder 15	37.4	3,375	38.5	3,450	39.5	3,525	40.5	3,595	41.6	3,675	63,500	96%
Hodgdon Varget	36.9	3,365	37.9	3,435	39.0	3,520	40.0	3,595	41.0	3,665	63,600	92%
Winchester StaBALL Match	37.5	3,345	38.5	3,420	39.6	3,500	40.7	3,580	41.7	3,650	63,600	101%
Reload Swiss RS50	38.4	3,335	39.5	3,415	40.5	3,485	41.6	3,565	42.7	3,645	63,800	97%
IMR 4064	36.5	3,340	37.5	3,410	38.5	3,480	39.6	3,560	40.6	3,635	63,600	94%
Hodgdon H4895	35.2	3,340	36.2	3,415	37.2	3,485	38.1	3,555	39.1	3,625	63,700	87%
IMR 4166	35.9	3,320	36.9	3,395	37.9	3,470	38.9	3,545	39.9	3,620	63,600	96%
Winchester 760	40.7	3,290	41.8	3,370	43.0	3,455	44.1	3,535	45.2	3,615	63,700	100%
Alliant AR-Comp	34.0	3,315	35.0	3,385	35.9	3,450	36.8	3,515	37.8	3,590	63,500	87%
Alliant Power Pro 4000-MR	42.3	3,245	43.5	3,330	44.6	3,410	45.8	3,495	47.0	3,585	63,700	103%

80 gr Bullet · 25" barrel

COAL: 2.520" • Bullet length: 0.923" • Seat depth: 0.305" • Usable capacity: 45.7 / 49.0 gr H_2O

Powder	STEP 1 · 90%		STEP 2		STEP 3		STEP 4		STEP 5 · LIMIT			
	gr	fps	gr	fps	gr	fps	gr	fps	gr	fps	psi	Fill
Hodgdon Leverevolution	37.5	3,265	38.5	3,335	39.6	3,415	40.7	3,495	41.7	3,565	63,400	87%
Winchester StaBALL 6.5	41.3	3,235	42.4	3,305	43.6	3,390	44.8	3,470	45.9	3,550	63,600	101%
Accurate 4350	41.1	3,210	42.3	3,290	43.4	3,370	44.6	3,455	45.7	3,535	63,700	105%
Hodgdon H4350	40.1	3,210	41.2	3,285	42.3	3,365	43.4	3,445	44.5	3,520	63,700	98%
Vihtavuori N550	38.9	3,225	40.0	3,300	41.0	3,365	42.1	3,440	43.2	3,515	63,500	99%
Hodgdon BL-C(2)	37.1	3,215	38.1	3,285	39.2	3,365	40.2	3,435	41.2	3,505	63,800	91%
Reload Swiss RS52	36.5	3,210	37.5	3,280	38.5	3,355	39.6	3,430	40.6	3,505	63,600	93%
Hodgdon SUPERFORMANCE	42.4	3,170	43.6	3,250	44.8	3,335	45.9	3,415	47.1	3,500	63,500	101%
Ramshot Big Game	39.2	3,200	40.3	3,275	41.4	3,350	42.5	3,425	43.6	3,500	63,600	97%
Vihtavuori N540	36.5	3,215	37.5	3,285	38.5	3,350	39.6	3,425	40.6	3,495	63,400	94%
Hodgdon CFE 223	37.4	3,205	38.4	3,270	39.5	3,350	40.5	3,420	41.5	3,490	63,700	93%
Alliant Power Pro 2000-MR	38.1	3,190	39.1	3,260	40.2	3,340	41.3	3,415	42.3	3,485	63,700	97%
Alliant Reloder 15	35.7	3,170	36.7	3,235	37.7	3,305	38.7	3,375	39.7	3,445	63,500	93%
Alliant Power Pro 4000-MR	41.0	3,110	42.1	3,185	43.3	3,265	44.5	3,350	45.6	3,430	63,700	102%
Reload Swiss RS50	37.0	3,140	38.0	3,210	39.0	3,280	40.1	3,355	41.1	3,425	63,500	95%
IMR 4064	34.9	3,140	35.9	3,210	36.8	3,270	37.8	3,340	38.8	3,410	63,600	91%
Shooters World The Creed	36.1	3,125	37.1	3,195	38.1	3,265	39.1	3,335	40.1	3,410	63,500	91%
IMR 4166	34.6	3,130	35.5	3,195	36.5	3,265	37.5	3,335	38.4	3,400	63,500	93%
Hodgdon H4895	33.7	3,130	34.6	3,190	35.5	3,255	36.5	3,325	37.4	3,390	63,700	85%
IMR 4451	38.8	3,055	39.9	3,135	41.0	3,210	42.0	3,280	43.1	3,360	63,500	98%

85 gr Bullet · 25" barrel

COAL: 2.550" • Bullet length: 0.934" • Seat depth: 0.286" • Usable capacity: 45.9 / 49.0 gr H_2O

Powder	STEP 1 · 90%		STEP 2		STEP 3		STEP 4		STEP 5 · LIMIT			
	gr	fps	gr	fps	gr	fps	gr	fps	gr	fps	psi	Fill
Winchester StaBALL 6.5	40.9	3,155	42.0	3,225	43.1	3,300	44.3	3,380	45.4	3,455	63,700	100%
Accurate 4350	40.7	3,140	41.8	3,215	43.0	3,295	44.1	3,375	45.2	3,450	63,600	103%
Hodgdon Leverevolution	37.0	3,165	38.0	3,235	39.0	3,305	40.1	3,385	41.1	3,450	63,500	86%
Hodgdon SUPERFORMANCE	42.0	3,110	43.2	3,190	44.4	3,270	45.5	3,350	46.7	3,430	63,600	100%
Hodgdon H4350	39.4	3,125	40.5	3,200	41.6	3,275	42.7	3,350	43.8	3,425	63,500	96%
Norma 204	41.0	3,095	42.1	3,170	43.3	3,255	44.5	3,335	45.6	3,415	63,800	104%
Alliant Reloder 16	39.0	3,120	40.1	3,190	41.1	3,260	42.2	3,330	43.3	3,405	63,800	105%
Ramshot Big Game	38.7	3,110	39.8	3,180	40.9	3,255	41.9	3,325	43.0	3,400	63,500	95%
Vihtavuori N550	38.0	3,110	39.0	3,175	40.1	3,250	41.2	3,320	42.2	3,385	63,500	97%
Ramshot Hunter	40.5	3,070	41.6	3,145	42.8	3,225	43.9	3,300	45.0	3,375	63,800	104%
Alliant Reloder 17	38.2	3,075	39.3	3,150	40.3	3,225	41.4	3,300	42.4	3,370	63,500	93%
Vihtavuori N540	35.8	3,100	36.8	3,170	37.8	3,235	38.8	3,300	39.8	3,370	63,600	92%
Hodgdon H414	38.8	3,055	39.9	3,130	41.0	3,205	42.0	3,270	43.1	3,350	63,500	96%
Norma MRP	41.7	3,025	42.9	3,105	44.0	3,180	45.1	3,255	46.3	3,335	62,700	105%
Alliant Reloder 15	35.1	3,065	36.1	3,135	37.0	3,195	38.0	3,265	39.0	3,330	63,700	91%
Reload Swiss RS50	36.5	3,045	37.5	3,110	38.5	3,180	39.6	3,250	40.6	3,320	63,600	93%
Vihtavuori N160	40.0	3,020	41.1	3,095	42.2	3,165	43.3	3,240	44.4	3,315	61,500	105%
IMR 4064	34.3	3,035	35.3	3,105	36.2	3,165	37.1	3,230	38.1	3,295	63,500	89%
IMR 4451	38.4	2,990	39.5	3,065	40.5	3,135	41.6	3,210	42.7	3,285	63,600	97%
Hodgdon H4895	33.0	3,010	33.9	3,075	34.9	3,145	35.8	3,205	36.7	3,270	63,600	83%

90 gr Bullet · 25" barrel

COAL: 2.550" • Bullet length: 1.094" • Seat depth: 0.446" • Usable capacity: 44.0 / 49.0 gr H_2O

Powder	STEP 1 · 90%		STEP 2		STEP 3		STEP 4		STEP 5 · LIMIT			
	gr	fps	gr	fps	gr	fps	gr	fps	gr	fps	psi	Fill
Accurate 4350	39.2	3,045	40.3	3,120	41.4	3,195	42.5	3,275	43.6	3,350	63,700	104%
Winchester StaBALL 6.5	39.4	3,055	40.5	3,130	41.6	3,200	42.7	3,275	43.8	3,350	63,700	100%
Hodgdon Leverevolution	35.6	3,065	36.6	3,135	37.6	3,205	38.6	3,275	39.6	3,340	63,500	86%
Hodgdon SUPERFORMANCE	40.6	3,025	41.7	3,100	42.9	3,185	44.0	3,260	45.1	3,335	63,800	100%
Hodgdon H4350	38.0	3,035	39.0	3,105	40.1	3,180	41.2	3,260	42.2	3,330	63,700	97%
Norma 204	39.5	3,005	40.6	3,080	41.7	3,155	42.8	3,230	43.9	3,310	63,500	105%
Alliant Reloder 16	37.4	3,015	38.5	3,085	39.5	3,155	40.5	3,220	41.6	3,295	63,500	105%
Ramshot Big Game	37.4	3,020	38.4	3,085	39.5	3,160	40.5	3,230	41.5	3,295	63,700	96%
Alliant Power Pro 2000-MR	36.2	3,000	37.2	3,070	38.2	3,140	39.2	3,210	40.2	3,275	63,600	96%
Alliant Reloder 17	36.8	2,985	37.8	3,055	38.8	3,125	39.9	3,205	40.9	3,275	63,700	93%
Hodgdon H380	36.5	2,980	37.5	3,045	38.5	3,115	39.6	3,190	40.6	3,260	63,700	98%
Vihtavuori N540	34.5	3,005	35.5	3,070	36.4	3,130	37.3	3,190	38.3	3,260	63,700	92%
Winchester 760	37.5	2,970	38.5	3,035	39.6	3,110	40.7	3,185	41.7	3,255	63,800	97%
Hodgdon H414	37.4	2,965	38.5	3,040	39.5	3,110	40.5	3,175	41.6	3,250	63,800	96%
Hodgdon Varget	33.6	2,975	34.5	3,040	35.5	3,110	36.4	3,170	37.3	3,235	63,700	88%
Alliant Reloder 15	33.8	2,970	34.7	3,030	35.6	3,090	36.6	3,160	37.5	3,225	63,800	91%
Reload Swiss RS50	35.2	2,950	36.2	3,015	37.2	3,085	38.1	3,145	39.1	3,210	63,500	93%
Vihtavuori N150	33.8	2,945	34.8	3,015	35.7	3,075	36.6	3,140	37.6	3,210	63,800	96%
IMR 4451	37.0	2,905	38.0	2,970	39.0	3,040	40.1	3,115	41.1	3,185	63,500	97%
Hodgdon H4895	31.8	2,915	32.7	2,975	33.5	3,035	34.4	3,095	35.3	3,160	63,700	83%

95 gr Bullet · 25" barrel

COAL: 2.710" • Bullet length: 1.132" • Seat depth: 0.324" • Usable capacity: 45.5 / 49.0 gr H_2O

Powder	STEP 1 · 90%		STEP 2		STEP 3		STEP 4		STEP 5 · LIMIT			
	gr	fps	gr	fps	gr	fps	gr	fps	gr	fps	psi	Fill
Alliant Reloder 26	42.8	3,005	44.0	3,085	45.2	3,160	46.4	3,240	47.6	3,320	63,100	105%
Accurate 4350	39.6	3,015	40.7	3,085	41.8	3,160	42.9	3,230	44.0	3,305	63,700	101%
Hodgdon SUPERFORMANCE	41.0	3,000	42.1	3,070	43.3	3,150	44.4	3,225	45.5	3,300	63,500	98%
Winchester StaBALL 6.5	39.7	3,010	40.8	3,080	41.9	3,150	43.0	3,220	44.1	3,295	63,600	98%
Vihtavuori N555	40.1	2,995	41.2	3,065	42.3	3,135	43.4	3,210	44.5	3,285	62,600	105%
Norma 204	40.1	2,985	41.2	3,055	42.3	3,130	43.4	3,200	44.5	3,275	63,800	103%
Hodgdon H4350	38.2	2,995	39.3	3,065	40.3	3,130	41.4	3,205	42.4	3,270	63,700	94%
Alliant Reloder 17	37.2	2,950	38.2	3,020	39.3	3,095	40.3	3,160	41.3	3,230	63,400	91%
Ramshot Big Game	37.5	2,960	38.5	3,025	39.6	3,095	40.7	3,165	41.7	3,230	63,500	93%
Alliant Reloder 19	40.2	2,920	41.3	2,995	42.5	3,075	43.6	3,150	44.7	3,220	63,700	104%
Norma MRP	40.8	2,930	41.9	3,000	43.0	3,070	44.2	3,150	45.3	3,220	63,500	103%
Hodgdon Hybrid 100V	37.4	2,915	38.5	2,990	39.5	3,060	40.5	3,130	41.6	3,205	63,800	102%
Hodgdon H414	37.7	2,925	38.8	2,995	39.8	3,060	40.9	3,135	41.9	3,200	63,500	94%
IMR 7828	41.6	2,890	42.8	2,965	43.9	3,040	45.1	3,120	46.2	3,190	63,700	102%
Vihtavuori N540	34.4	2,925	35.4	2,985	36.3	3,045	37.3	3,110	38.2	3,170	63,700	89%
Hodgdon Varget	33.7	2,910	34.6	2,970	35.5	3,030	36.5	3,100	37.4	3,160	63,500	85%
Winchester Supreme 780	42.8	2,855	44.0	2,930	45.1	3,000	46.3	3,080	47.5	3,160	62,700	105%
Hodgdon H4831	40.1	2,860	41.2	2,930	42.3	3,005	43.4	3,075	44.5	3,150	61,300	105%
Alliant Reloder 15	33.8	2,900	34.7	2,960	35.6	3,020	36.6	3,085	37.5	3,145	63,800	88%
Shooters World SW4350	39.2	2,860	40.3	2,930	41.4	3,000	42.5	3,070	43.6	3,145	63,800	104%

100 gr Bullet · 25" barrel

COAL: 2.550" • Bullet length: 1.079" • Seat depth: 0.430" • Usable capacity: 44.3 / 49.0 gr H_2O

Powder	STEP 1 · 90%		STEP 2		STEP 3		STEP 4		STEP 5 · LIMIT			
	gr	fps	gr	fps	gr	fps	gr	fps	gr	fps	psi	Fill
Alliant Reloder 26	41.7	2,935	42.9	3,015	44.0	3,085	45.1	3,155	46.3	3,240	63,200	105%
Hodgdon SUPERFORMANCE	39.9	2,925	41.0	2,995	42.1	3,065	43.2	3,140	44.3	3,215	63,700	98%
Accurate 4350	38.4	2,925	39.5	3,000	40.5	3,065	41.6	3,135	42.7	3,210	63,500	101%
Vihtavuori N555	39.0	2,925	40.1	2,995	41.1	3,060	42.2	3,135	43.3	3,205	63,100	105%
Winchester StaBALL 6.5	38.6	2,925	39.7	2,995	40.8	3,065	41.8	3,130	42.9	3,200	63,800	98%
Norma 204	38.9	2,895	40.0	2,970	41.0	3,035	42.1	3,105	43.2	3,180	63,500	103%
Hodgdon H4350	37.0	2,905	38.0	2,970	39.0	3,035	40.1	3,110	41.1	3,175	63,700	94%
Hodgdon H4831SC	39.8	2,865	40.9	2,935	42.0	3,005	43.1	3,080	44.2	3,150	63,700	100%
Alliant Reloder 17	36.2	2,870	37.2	2,940	38.2	3,010	39.2	3,075	40.2	3,145	63,700	91%
Alliant Reloder 19	39.1	2,850	40.2	2,920	41.3	2,995	42.3	3,060	43.4	3,135	63,500	104%
Alliant Reloder 16	36.4	2,875	37.4	2,935	38.4	3,000	39.4	3,065	40.4	3,130	63,500	101%
Alliant Power Pro 4000-MR	38.5	2,845	39.6	2,915	40.6	2,980	41.7	3,055	42.8	3,125	63,600	98%
Hodgdon Hybrid 100V	36.4	2,840	37.4	2,910	38.4	2,975	39.4	3,045	40.4	3,115	63,600	102%
Reload Swiss RS70	39.0	2,805	40.1	2,875	41.1	2,940	42.2	3,010	43.3	3,085	63,700	99%
Vihtavuori N550	35.2	2,840	36.2	2,905	37.2	2,965	38.1	3,025	39.1	3,085	63,500	93%
Winchester Supreme 780	41.6	2,785	42.8	2,865	43.9	2,935	45.1	3,015	46.2	3,085	62,800	105%
Hodgdon Varget	32.7	2,820	33.6	2,880	34.5	2,940	35.4	3,000	36.3	3,065	63,800	85%
IMR 4451	36.4	2,800	37.4	2,865	38.4	2,930	39.4	2,995	40.4	3,065	63,700	95%
Vihtavuori N540	33.2	2,820	34.1	2,875	35.0	2,935	36.0	3,000	36.9	3,055	63,500	88%
IMR 4166	32.0	2,775	32.9	2,835	33.8	2,895	34.7	2,955	35.6	3,015	63,700	89%

105 gr Bullet · 25" barrel

COAL: 2.720" • Bullet length: 1.236" • Seat depth: 0.417" • Usable capacity: 44.5 / 49.0 gr H_2O

Powder	STEP 1 · 90%		STEP 2		STEP 3		STEP 4		STEP 5 · LIMIT			
	gr	fps	gr	fps	gr	fps	gr	fps	gr	fps	psi	Fill
Alliant Reloder 26	41.4	2,890	42.5	2,960	43.7	3,035	44.9	3,115	46.0	3,185	63,500	104%
Hodgdon SUPERFORMANCE	39.5	2,865	40.6	2,935	41.7	3,005	42.8	3,080	43.9	3,150	63,700	97%
Accurate 4350	38.1	2,870	39.1	2,935	40.2	3,005	41.3	3,075	42.3	3,145	63,600	99%
Vihtavuori N555	38.5	2,870	39.6	2,940	40.6	3,005	41.7	3,075	42.8	3,145	63,700	103%
Norma 204	38.6	2,840	39.7	2,910	40.8	2,985	41.8	3,050	42.9	3,120	63,600	101%
Winchester StaBALL 6.5	38.2	2,855	39.3	2,925	40.3	2,990	41.4	3,060	42.4	3,120	63,600	96%
Alliant Reloder 23	38.7	2,845	39.8	2,910	40.9	2,980	41.9	3,045	43.0	3,115	61,000	105%
Alliant Reloder 22	39.5	2,825	40.6	2,895	41.7	2,965	42.8	3,040	43.9	3,110	63,400	105%
Norma MRP	39.3	2,800	40.4	2,870	41.5	2,940	42.6	3,010	43.7	3,080	63,800	102%
Ramshot Hunter	38.0	2,810	39.0	2,875	40.1	2,945	41.2	3,015	42.2	3,080	63,800	101%
Alliant Reloder 17	35.8	2,810	36.8	2,875	37.8	2,940	38.8	3,010	39.8	3,075	63,500	90%
IMR 7828	39.9	2,770	41.0	2,840	42.1	2,910	43.2	2,980	44.3	3,050	63,600	100%
Hodgdon H4831	39.1	2,770	40.2	2,840	41.3	2,910	42.3	2,975	43.4	3,045	63,500	105%
Hodgdon H414	36.3	2,780	37.3	2,845	38.3	2,910	39.3	2,975	40.3	3,040	63,600	92%
Winchester 760	36.4	2,785	37.4	2,845	38.4	2,910	39.4	2,975	40.4	3,040	63,700	93%
Accurate 3100	38.7	2,735	39.8	2,805	40.9	2,880	41.9	2,945	43.0	3,015	63,400	105%
IMR 4007 SSC	35.6	2,755	36.6	2,820	37.6	2,885	38.6	2,950	39.6	3,015	63,400	95%
Vihtavuori N550	34.6	2,760	35.5	2,815	36.5	2,880	37.5	2,940	38.4	2,995	63,600	91%
Hodgdon Varget	32.2	2,740	33.1	2,800	34.0	2,860	34.9	2,920	35.8	2,980	63,700	84%
Vihtavuori N540	32.7	2,735	33.6	2,795	34.5	2,850	35.4	2,910	36.3	2,965	63,700	87%

115 gr Bullet · 25" barrel

COAL: 2.730" • Bullet length: 1.350" • Seat depth: 0.522" • Usable capacity: 43.2 / 49.0 gr H_2O

Powder	STEP 1 · 90%		STEP 2		STEP 3		STEP 4		STEP 5 · LIMIT			
	gr	fps	gr	fps	gr	fps	gr	fps	gr	fps	psi	Fill
Alliant Reloder 26	40.0	2,780	41.1	2,850	42.2	2,920	43.3	2,990	44.4	3,060	63,800	103%
Hodgdon SUPERFORMANCE	38.1	2,750	39.1	2,810	40.2	2,880	41.3	2,950	42.3	3,015	63,700	96%
Alliant Reloder 23	37.6	2,740	38.6	2,800	39.7	2,870	40.8	2,940	41.8	3,005	62,600	105%
Accurate 4350	36.6	2,740	37.6	2,800	38.7	2,870	39.7	2,935	40.7	3,000	63,700	98%
Vihtavuori N555	36.8	2,740	37.8	2,805	38.8	2,865	39.9	2,935	40.9	3,000	63,800	102%
Alliant Reloder 22	38.1	2,715	39.1	2,780	40.2	2,850	41.3	2,915	42.3	2,980	63,500	104%
Norma 204	37.2	2,715	38.2	2,780	39.3	2,850	40.3	2,915	41.3	2,975	63,400	100%
Winchester StaBALL 6.5	36.6	2,715	37.6	2,775	38.7	2,840	39.7	2,905	40.7	2,965	63,400	95%
IMR 7828SSC	38.1	2,690	39.1	2,750	40.2	2,820	41.3	2,885	42.3	2,950	63,600	102%
Winchester Supreme 780	40.0	2,665	41.1	2,735	42.2	2,800	43.3	2,870	44.4	2,940	63,600	103%
Alliant Reloder 17	34.5	2,685	35.5	2,750	36.4	2,810	37.3	2,870	38.3	2,935	63,400	89%
Ramshot Hunter	36.5	2,680	37.5	2,740	38.5	2,805	39.6	2,875	40.6	2,935	63,700	100%
IMR 7828	38.3	2,655	39.3	2,720	40.4	2,785	41.5	2,855	42.5	2,920	63,600	99%
Ramshot Big Game	34.6	2,665	35.5	2,720	36.5	2,785	37.5	2,845	38.4	2,905	63,800	90%
Accurate 2700	34.9	2,650	35.9	2,710	36.8	2,770	37.8	2,830	38.8	2,895	63,400	91%
Alliant Reloder 16	34.3	2,660	35.3	2,720	36.2	2,775	37.1	2,830	38.1	2,895	63,700	98%
Winchester 760	34.9	2,650	35.9	2,710	36.8	2,765	37.8	2,830	38.8	2,895	63,600	92%
IMR 4007 SSC	34.3	2,630	35.3	2,695	36.2	2,755	37.1	2,810	38.1	2,875	63,500	94%
IMR 4451	34.7	2,620	35.7	2,685	36.6	2,740	37.5	2,800	38.5	2,860	63,700	93%
Hodgdon Varget	30.8	2,595	31.7	2,650	32.5	2,705	33.4	2,765	34.2	2,815	63,600	82%

6mm-284

The 6mm-284 is a wildcat cartridge made by necking down the .284 Winchester case to hold .243-inch bullets. Winchester introduced the .284 in 1963 for its Model 88 lever-action and Model 100 semi-automatic rifles. Wildcatters quickly necked the short and fat rebated-rim case up and down to other calibers. The .243 Winchester and .244 Remington were receiving considerable attention at the time. As a result the 6mm version became one of the most popular of these wildcats.

Published velocities from 26-inch barrels are about 3,600 fps with 75-grain bullets and about 3,200 fps with 100- to 105-grain bullets. The cartridge has been used for long-range varmint hunting, deer hunting and some benchrest competition. It has never been standardized by SAAMI or loaded as factory ammunition. Rifles are therefore built by custom gunsmiths. Brass is formed from .284 Winchester cases. Load data has appeared in reloading manuals since the 1960s.

Cartridge specifications	
Bullet Diameter	**0.243" (6.17 mm)**
Max Case Length	**2.170" (55.12 mm)**
Case Trim Length	**2.160" (54.86 mm)**
Max COAL	**2.800" (71.12 mm)**
Primer Pocket	**Large Rifle**
Standard Twist	**1:8"**
Case Capacity	**66.0 gr H_2O**
Max Pressure	**56,000 psi (SAAMI)**

55 gr Bullet · 25" barrel

COAL: 2.674" • Bullet length: 0.747" • Seat depth: 0.243" • Usable capacity: 63.4 / 66.0 gr H_2O

Powder	STEP 1 · 90%		STEP 2		STEP 3		STEP 4		STEP 5 · LIMIT			
	gr	fps	gr	fps	gr	fps	gr	fps	gr	fps	psi	Fill
Winchester StaBALL 6.5	50.4	3,665	51.8	3,750	53.2	3,840	54.6	3,925	56.0	4,010	55,900	89%
Reload Swiss RS52	44.7	3,670	46.0	3,755	47.2	3,830	48.5	3,915	49.7	3,995	55,900	82%
Vihtavuori N560	55.9	3,615	57.5	3,710	59.0	3,805	60.5	3,895	62.1	3,995	55,900	102%
Alliant Reloder 23	51.9	3,625	53.4	3,720	54.8	3,805	56.3	3,895	57.7	3,985	55,800	99%
Hodgdon CFE 223	45.9	3,660	47.2	3,745	48.5	3,830	49.7	3,905	51.0	3,985	55,700	82%
IMR 4350	50.7	3,620	52.1	3,710	53.5	3,800	54.9	3,890	56.3	3,980	55,900	95%
Accurate 4350	50.5	3,610	51.9	3,700	53.3	3,790	54.7	3,880	56.1	3,970	55,700	92%
Alliant Reloder 16	48.9	3,625	50.3	3,710	51.6	3,795	52.9	3,875	54.3	3,960	55,700	95%
Hodgdon H4350	49.6	3,590	51.0	3,680	52.4	3,775	53.7	3,855	55.1	3,950	55,900	88%
Ramshot Hunter	50.4	3,570	51.8	3,655	53.2	3,745	54.6	3,830	56.0	3,915	56,000	94%
Hodgdon H414	48.3	3,550	49.6	3,630	51.0	3,720	52.4	3,805	53.7	3,890	55,900	86%
Hodgdon Hybrid 100V	48.1	3,530	49.4	3,615	50.8	3,705	52.1	3,790	53.4	3,875	56,000	94%
Vihtavuori N170	57.6	3,515	59.2	3,600	60.8	3,690	62.4	3,785	64.0	3,875	55,300	105%
Alliant Power Pro 4000-MR	50.6	3,525	52.0	3,610	53.4	3,695	54.8	3,780	56.2	3,865	55,800	90%
Hodgdon H4831SC	52.0	3,485	53.5	3,575	54.9	3,660	56.3	3,745	57.8	3,840	55,900	92%
Norma MRP	52.3	3,485	53.8	3,575	55.2	3,660	56.6	3,745	58.1	3,840	56,000	95%
Reload Swiss RS76	57.1	3,465	58.7	3,560	60.3	3,655	61.8	3,745	63.4	3,840	55,800	101%
Vihtavuori N555	51.2	3,480	52.6	3,565	54.0	3,655	55.5	3,750	56.9	3,840	56,000	96%
Alliant Reloder 22	52.6	3,480	54.0	3,565	55.5	3,655	57.0	3,750	58.4	3,835	55,900	98%
Vihtavuori N165	53.6	3,440	55.1	3,530	56.5	3,615	58.0	3,705	59.5	3,800	55,900	101%

60 gr Bullet · 25" barrel

COAL: 2.680" • Bullet length: 0.852" • Seat depth: 0.342" • Usable capacity: 62.4 / 66.0 gr H_2O

Powder	STEP 1 · 90%		STEP 2		STEP 3		STEP 4		STEP 5 · LIMIT			
	gr	fps	gr	fps	gr	fps	gr	fps	gr	fps	psi	Fill
Vihtavuori N560	54.4	3,530	55.9	3,620	57.4	3,705	58.9	3,800	60.4	3,885	56,000	101%
Winchester StaBALL 6.5	49.1	3,550	50.5	3,635	51.9	3,720	53.2	3,800	54.6	3,885	56,000	88%
Alliant Reloder 23	50.8	3,535	52.2	3,620	53.6	3,705	55.0	3,790	56.4	3,875	56,000	98%
IMR 4350	49.3	3,525	50.7	3,610	52.0	3,690	53.4	3,780	54.8	3,870	56,000	94%
Accurate 4350	49.3	3,525	50.7	3,610	52.0	3,690	53.4	3,780	54.8	3,865	56,000	92%
Reload Swiss RS52	43.6	3,545	44.8	3,625	46.0	3,700	47.2	3,775	48.4	3,855	55,900	82%
Hodgdon CFE 223	44.6	3,525	45.9	3,610	47.1	3,685	48.4	3,765	49.6	3,840	55,900	81%
Hodgdon H4350	48.2	3,495	49.5	3,580	50.9	3,670	52.2	3,750	53.5	3,835	55,800	86%
Ramshot Hunter	49.1	3,465	50.5	3,550	51.9	3,635	53.2	3,710	54.6	3,800	55,900	93%
Norma 204	49.2	3,455	50.6	3,540	52.0	3,630	53.3	3,710	54.7	3,795	55,900	92%
IMR 4064	42.2	3,485	43.4	3,560	44.5	3,630	45.7	3,705	46.9	3,780	55,900	80%
Vihtavuori N170	56.2	3,430	57.8	3,520	59.3	3,600	60.9	3,690	62.4	3,775	55,900	104%
Vihtavuori N150	42.7	3,470	43.9	3,545	45.0	3,615	46.2	3,690	47.4	3,765	55,900	85%
Vihtavuori N160	49.3	3,425	50.7	3,510	52.0	3,585	53.4	3,670	54.8	3,755	55,900	95%
Alliant Reloder 22	51.3	3,395	52.7	3,480	54.1	3,565	55.6	3,660	57.0	3,750	55,900	97%
Reload Swiss RS76	55.9	3,390	57.5	3,480	59.0	3,565	60.5	3,655	62.1	3,750	56,000	100%
Hodgdon H4831SC	50.9	3,405	52.3	3,490	53.7	3,575	55.1	3,660	56.5	3,745	56,000	91%
Norma MRP	51.0	3,395	52.4	3,480	53.9	3,570	55.3	3,655	56.7	3,740	55,900	95%
IMR 4831	48.8	3,385	50.1	3,465	51.5	3,555	52.9	3,645	54.2	3,725	55,900	93%
Vihtavuori N165	52.2	3,360	53.7	3,450	55.1	3,535	56.5	3,615	58.0	3,705	55,900	100%

70 gr Bullet · 25" barrel

COAL: 2.740" • Bullet length: 0.834" • Seat depth: 0.264" • Usable capacity: 63.1 / 66.0 gr H_2O

Powder	STEP 1 · 90%		STEP 2		STEP 3		STEP 4		STEP 5 · LIMIT			
	gr	fps	gr	fps	gr	fps	gr	fps	gr	fps	psi	Fill
Alliant Reloder 23	49.7	3,375	51.1	3,455	52.5	3,535	53.8	3,610	55.2	3,690	55,900	95%
Alliant Reloder 26	52.6	3,360	54.0	3,435	55.5	3,525	57.0	3,610	58.4	3,690	55,800	93%
Vihtavuori N560	52.5	3,365	54.0	3,445	55.4	3,525	56.8	3,600	58.3	3,685	55,900	97%
Accurate 4350	48.2	3,370	49.5	3,445	50.9	3,525	52.2	3,600	53.5	3,680	55,800	89%
IMR 4350	47.9	3,360	49.2	3,435	50.5	3,510	51.9	3,595	53.2	3,670	55,800	91%
Winchester StaBALL 6.5	47.9	3,360	49.2	3,435	50.5	3,510	51.9	3,590	53.2	3,665	55,800	85%
Hodgdon SUPERFORMANCE	49.6	3,330	51.0	3,415	52.4	3,500	53.7	3,575	55.1	3,660	56,000	86%
Hodgdon H4350	46.8	3,335	48.1	3,415	49.4	3,490	50.7	3,570	52.0	3,645	55,900	83%
Alliant Reloder 22	50.3	3,285	51.7	3,365	53.1	3,450	54.5	3,530	55.9	3,615	55,900	94%
Ramshot Hunter	48.2	3,310	49.5	3,385	50.9	3,465	52.2	3,540	53.5	3,615	55,900	90%
Hodgdon H4831SC	49.9	3,270	51.3	3,355	52.6	3,430	54.0	3,510	55.4	3,590	55,800	88%
IMR 4831	48.0	3,260	49.3	3,340	50.6	3,420	52.0	3,505	53.3	3,585	55,900	91%
Norma MRP	50.0	3,270	51.4	3,345	52.8	3,425	54.1	3,500	55.5	3,585	55,800	92%
Vihtavuori N170	54.5	3,270	56.0	3,350	57.5	3,425	59.0	3,505	60.5	3,585	55,800	100%
Alliant Reloder 25	52.4	3,215	53.9	3,295	55.3	3,375	56.8	3,465	58.2	3,545	55,800	101%
Winchester StaBALL HD	55.6	3,190	57.1	3,275	58.7	3,365	60.3	3,450	61.8	3,540	55,900	100%
Vihtavuori N565	53.7	3,190	55.2	3,275	56.7	3,360	58.2	3,445	59.7	3,535	55,900	99%
IMR 7828	51.0	3,185	52.4	3,265	53.9	3,350	55.3	3,430	56.7	3,515	55,900	90%
Alliant Reloder 19	48.3	3,195	49.6	3,270	51.0	3,350	52.4	3,435	53.7	3,510	55,900	90%
Accurate 3100	49.4	3,175	50.8	3,255	52.1	3,330	53.5	3,410	54.9	3,495	55,900	94%

75 gr Bullet · 25" barrel

COAL: 2.745" • Bullet length: 0.879" • Seat depth: 0.304" • Usable capacity: 62.7 / 66.0 gr H_2O

Powder	STEP 1 · 90%		STEP 2		STEP 3		STEP 4		STEP 5 · LIMIT			
	gr	fps	gr	fps	gr	fps	gr	fps	gr	fps	psi	Fill
Alliant Reloder 26	51.8	3,290	53.2	3,370	54.6	3,445	56.1	3,535	57.5	3,615	55,900	92%
Alliant Reloder 23	48.8	3,290	50.1	3,360	51.5	3,440	52.9	3,520	54.2	3,595	55,800	94%
Accurate 4350	47.3	3,280	48.6	3,355	50.0	3,435	51.3	3,510	52.6	3,585	56,000	88%
Vihtavuori N560	51.2	3,270	52.6	3,345	54.0	3,420	55.5	3,500	56.9	3,580	55,800	95%
IMR 4350	46.9	3,270	48.2	3,345	49.5	3,420	50.8	3,495	52.1	3,570	55,800	89%
Hodgdon SUPERFORMANCE	48.7	3,250	50.1	3,330	51.4	3,410	52.8	3,490	54.1	3,565	55,800	84%
Winchester StaBALL 6.5	47.0	3,265	48.3	3,340	49.6	3,415	50.9	3,485	52.2	3,560	55,900	84%
Hodgdon H4350	45.8	3,245	47.1	3,325	48.3	3,395	49.6	3,470	50.9	3,545	55,900	82%
Alliant Reloder 22	49.5	3,220	50.9	3,300	52.3	3,380	53.6	3,460	55.0	3,540	56,000	93%
Hodgdon H4831SC	49.1	3,200	50.5	3,280	51.8	3,355	53.1	3,425	54.5	3,505	55,900	87%
IMR 4831	47.3	3,195	48.6	3,270	49.9	3,350	51.2	3,425	52.5	3,505	55,900	90%
Accurate MagPro	53.0	3,160	54.5	3,245	56.0	3,330	57.4	3,410	58.9	3,495	55,800	96%
Vihtavuori N170	53.4	3,190	54.9	3,265	56.3	3,335	57.8	3,410	59.3	3,490	56,000	98%
Vihtavuori N570	54.3	3,140	55.8	3,225	57.3	3,305	58.8	3,395	60.3	3,480	56,000	99%
Winchester StaBALL HD	54.8	3,135	56.3	3,215	57.8	3,295	59.4	3,385	60.9	3,470	55,800	99%
Hodgdon H4831	49.0	3,150	50.4	3,230	51.7	3,305	53.0	3,380	54.4	3,460	55,900	93%
Alliant Reloder 19	47.5	3,125	48.8	3,205	50.1	3,280	51.5	3,360	52.8	3,435	55,800	89%
IMR 8133	54.2	3,100	55.7	3,180	57.2	3,265	58.7	3,350	60.2	3,435	55,900	100%
Winchester Supreme 780	51.7	3,115	53.1	3,190	54.5	3,270	56.0	3,355	57.4	3,435	55,800	92%
Shooters World SW4350	47.4	3,135	48.7	3,205	50.0	3,280	51.4	3,355	52.7	3,430	55,800	91%

80 gr Bullet · 25" barrel

COAL: 2.591" • Bullet length: 0.904" • Seat depth: 0.483" • Usable capacity: 60.7 / 66.0 gr H_2O

Powder	STEP 1 · 90%		STEP 2		STEP 3		STEP 4		STEP 5 · LIMIT			
	gr	fps	gr	fps	gr	fps	gr	fps	gr	fps	psi	Fill
Alliant Reloder 26	50.1	3,205	51.5	3,280	52.9	3,360	54.3	3,440	55.7	3,520	55,700	92%
Alliant Reloder 23	47.3	3,200	48.6	3,275	49.9	3,345	51.2	3,420	52.5	3,495	55,700	94%
Accurate 4350	45.8	3,190	47.1	3,265	48.3	3,335	49.6	3,410	50.9	3,485	55,800	88%
Vihtavuori N560	49.6	3,185	51.0	3,260	52.4	3,335	53.7	3,405	55.1	3,480	55,900	95%
Hodgdon SUPERFORMANCE	47.3	3,170	48.6	3,245	49.9	3,320	51.2	3,400	52.5	3,475	55,800	85%
Hodgdon Retumbo	52.6	3,145	54.0	3,220	55.5	3,305	57.0	3,390	58.4	3,470	56,000	100%
Ramshot Grand	52.7	3,135	54.2	3,215	55.6	3,295	57.0	3,375	58.5	3,460	55,800	98%
Alliant Reloder 22	48.0	3,145	49.3	3,220	50.6	3,295	52.0	3,375	53.3	3,450	56,000	93%
Hodgdon H4350	44.3	3,160	45.5	3,230	46.8	3,305	48.0	3,375	49.2	3,445	55,900	82%
Reload Swiss RS76	52.7	3,125	54.2	3,205	55.6	3,280	57.0	3,360	58.5	3,440	55,900	97%
Hodgdon H4831SC	47.5	3,115	48.8	3,185	50.1	3,260	51.5	3,340	52.8	3,415	55,800	88%
IMR 4831	45.8	3,110	47.1	3,190	48.3	3,260	49.6	3,335	50.9	3,415	55,800	90%
Accurate MagPro	51.5	3,090	52.9	3,170	54.4	3,255	55.8	3,330	57.2	3,410	55,800	96%
Norma MRP	47.6	3,110	48.9	3,185	50.3	3,260	51.6	3,335	52.9	3,410	55,900	91%
Vihtavuori N170	51.6	3,100	53.0	3,170	54.5	3,245	55.9	3,315	57.3	3,385	55,800	98%
IMR 7828SSC	47.7	3,080	49.0	3,150	50.4	3,230	51.7	3,305	53.0	3,380	55,800	91%
Vihtavuori N165	48.2	3,070	49.6	3,145	50.9	3,215	52.3	3,290	53.6	3,365	56,000	95%
Winchester Supreme 780	50.1	3,045	51.5	3,120	52.9	3,200	54.3	3,280	55.7	3,360	55,800	92%
Alliant Reloder 19	46.1	3,055	47.4	3,130	48.7	3,205	49.9	3,275	51.2	3,350	55,800	90%
Shooters World SW4350	46.0	3,055	47.3	3,125	48.5	3,190	49.8	3,265	51.1	3,335	55,900	91%

85 gr Bullet · 25" barrel

COAL: 2.591" • Bullet length: 0.981" • Seat depth: 0.560" • Usable capacity: 59.9 / 66.0 gr H_2O

Powder	STEP 1 · 90%		STEP 2		STEP 3		STEP 4		STEP 5 · LIMIT			
	gr	fps	gr	fps	gr	fps	gr	fps	gr	fps	psi	Fill
Alliant Reloder 26	49.1	3,130	50.5	3,210	51.9	3,285	53.2	3,360	54.6	3,440	55,800	92%
Alliant Reloder 23	46.3	3,120	47.6	3,190	48.8	3,260	50.1	3,330	51.4	3,405	55,800	93%
Accurate 4350	44.8	3,105	46.0	3,175	47.3	3,250	48.5	3,315	49.8	3,390	55,900	87%
Hodgdon Retumbo	51.6	3,080	53.0	3,155	54.5	3,235	55.9	3,315	57.3	3,390	56,000	99%
Ramshot Grand	51.8	3,070	53.2	3,150	54.6	3,225	56.1	3,310	57.5	3,390	55,900	98%
Hodgdon SUPERFORMANCE	46.3	3,090	47.6	3,165	48.8	3,235	50.1	3,310	51.4	3,385	55,800	84%
Vihtavuori N560	48.3	3,100	49.6	3,165	51.0	3,240	52.4	3,315	53.7	3,385	56,000	94%
Alliant Reloder 22	47.0	3,075	48.3	3,150	49.6	3,220	50.9	3,295	52.2	3,370	56,000	93%
IMR 4350	44.3	3,095	45.5	3,160	46.8	3,235	48.0	3,305	49.2	3,370	55,800	88%
Reload Swiss RS76	51.7	3,055	53.1	3,130	54.5	3,205	56.0	3,285	57.4	3,360	55,900	97%
Hodgdon H4831SC	46.6	3,045	47.9	3,115	49.2	3,190	50.5	3,260	51.8	3,335	56,000	87%
Vihtavuori N565	49.9	3,030	51.3	3,110	52.6	3,180	54.0	3,255	55.4	3,335	56,000	97%
IMR 4831	44.9	3,040	46.1	3,110	47.4	3,185	48.6	3,255	49.9	3,330	55,800	89%
Ramshot Magnum	51.7	3,010	53.1	3,085	54.5	3,160	56.0	3,240	57.4	3,320	55,900	96%
Hodgdon H1000	49.1	3,010	50.5	3,090	51.8	3,160	53.1	3,230	54.5	3,310	56,000	99%
IMR 8133	51.7	2,980	53.1	3,055	54.5	3,130	56.0	3,215	57.4	3,295	55,900	100%
Vihtavuori N170	50.3	3,010	51.7	3,080	53.1	3,150	54.5	3,220	55.9	3,290	55,800	97%
Alliant Reloder 19	45.2	2,990	46.5	3,065	47.7	3,135	49.0	3,210	50.2	3,275	55,900	89%
Vihtavuori N165	47.1	2,995	48.4	3,060	49.7	3,130	51.0	3,200	52.3	3,270	55,900	94%
Accurate 3100	46.1	2,975	47.4	3,045	48.7	3,120	49.9	3,190	51.2	3,260	55,900	93%

90 gr Bullet · 25" barrel

COAL: 2.591" • Bullet length: 1.042" • Seat depth: 0.621" • Usable capacity: 59.6 / 66.0 gr H_2O

Powder	STEP 1 · 90%		STEP 2		STEP 3		STEP 4		STEP 5 · LIMIT			
	gr	fps	gr	fps	gr	fps	gr	fps	gr	fps	psi	Fill
Alliant Reloder 26	48.4	3,070	49.8	3,150	51.1	3,220	52.4	3,290	53.8	3,370	55,800	91%
Alliant Reloder 23	45.5	3,045	46.8	3,115	48.0	3,180	49.3	3,255	50.6	3,325	55,800	92%
Hodgdon Retumbo	50.9	3,025	52.3	3,095	53.7	3,170	55.1	3,245	56.5	3,325	55,800	99%
Ramshot Grand	51.1	3,015	52.5	3,090	54.0	3,170	55.4	3,250	56.8	3,325	55,800	97%
Hodgdon SUPERFORMANCE	45.6	3,025	46.9	3,100	48.2	3,175	49.4	3,240	50.7	3,315	56,000	83%
Accurate 4350	44.1	3,035	45.3	3,105	46.5	3,170	47.8	3,245	49.0	3,310	55,900	86%
Vihtavuori N570	50.8	2,995	52.2	3,070	53.6	3,145	55.0	3,225	56.4	3,305	55,800	97%
Vihtavuori N560	47.3	3,020	48.6	3,090	50.0	3,160	51.3	3,230	52.6	3,300	55,900	92%
Reload Swiss RS76	50.9	2,990	52.3	3,065	53.8	3,140	55.2	3,215	56.6	3,290	55,800	96%
Accurate MagPro	50.0	2,980	51.4	3,060	52.8	3,135	54.1	3,205	55.5	3,285	55,800	95%
IMR 4831	44.4	2,985	45.6	3,055	46.8	3,125	48.1	3,200	49.3	3,270	55,900	89%
Vihtavuori N565	48.9	2,975	50.3	3,050	51.6	3,120	52.9	3,190	54.3	3,270	55,800	96%
Ramshot Magnum	51.0	2,960	52.4	3,035	53.9	3,110	55.3	3,190	56.7	3,265	55,900	95%
Hodgdon H4831SC	45.9	2,980	47.2	3,050	48.5	3,125	49.7	3,190	51.0	3,260	55,800	86%
Norma MRP	45.9	2,975	47.2	3,045	48.5	3,115	49.7	3,180	51.0	3,255	55,900	89%
Hodgdon H4831	45.6	2,940	46.9	3,010	48.2	3,080	49.4	3,145	50.7	3,220	55,800	91%
Alliant Reloder 19	44.6	2,935	45.8	3,005	47.0	3,070	48.3	3,145	49.5	3,215	55,800	88%
Vihtavuori N170	49.5	2,945	50.9	3,015	52.3	3,085	53.6	3,145	55.0	3,215	56,000	96%
Vihtavuori N160	43.6	2,930	44.8	2,995	46.0	3,060	47.2	3,125	48.4	3,190	55,800	88%
Ramshot LRT	55.3	2,870	56.8	2,945	58.3	3,025	59.9	3,105	61.4	3,185	53,000	105%

95 gr Bullet · 25" barrel

COAL: 2.591" • Bullet length: 1.131" • Seat depth: 0.710" • Usable capacity: 58.9 / 66.0 gr H_2O

Powder	STEP 1 · 90%		STEP 2		STEP 3		STEP 4		STEP 5 · LIMIT			
	gr	fps	gr	fps	gr	fps	gr	fps	gr	fps	psi	Fill
Alliant Reloder 26	47.6	3,015	48.9	3,085	50.3	3,160	51.6	3,230	52.9	3,305	55,900	90%
Hodgdon Retumbo	50.0	2,965	51.4	3,035	52.8	3,110	54.2	3,185	55.6	3,260	55,800	98%
Ramshot Grand	50.3	2,960	51.7	3,035	53.1	3,110	54.5	3,185	55.9	3,260	55,700	97%
Vihtavuori N570	50.0	2,955	51.4	3,030	52.8	3,105	54.1	3,175	55.5	3,255	56,000	97%
Alliant Reloder 23	44.7	2,980	46.0	3,050	47.2	3,115	48.5	3,185	49.7	3,250	55,800	92%
Hodgdon SUPERFORMANCE	44.8	2,960	46.0	3,030	47.3	3,105	48.5	3,170	49.8	3,240	55,900	83%
Accurate 4350	43.3	2,970	44.5	3,035	45.7	3,100	46.9	3,170	48.1	3,235	55,900	85%
Accurate MagPro	49.2	2,930	50.6	3,005	52.0	3,080	53.3	3,155	54.7	3,230	55,900	95%
Reload Swiss RS76	50.1	2,935	51.5	3,005	52.9	3,080	54.3	3,150	55.7	3,225	55,800	95%
Vihtavuori N560	46.4	2,960	47.7	3,025	49.0	3,090	50.2	3,150	51.5	3,220	55,900	91%
Ramshot Magnum	50.2	2,910	51.6	2,985	53.0	3,060	54.4	3,135	55.8	3,210	55,900	95%
Vihtavuori N565	47.9	2,920	49.2	2,990	50.5	3,060	51.9	3,135	53.2	3,205	55,800	95%
Hodgdon H4831SC	45.1	2,920	46.4	2,990	47.6	3,055	48.9	3,125	50.1	3,190	55,800	86%
Hodgdon H1000	47.5	2,900	48.8	2,970	50.1	3,040	51.5	3,115	52.8	3,185	55,800	97%
Norma MRP	45.1	2,915	46.4	2,985	47.6	3,050	48.9	3,120	50.1	3,185	55,900	88%
IMR 7828SSC	45.0	2,895	46.3	2,965	47.5	3,030	48.8	3,100	50.0	3,165	56,000	88%
Alliant Reloder 19	43.8	2,880	45.0	2,945	46.3	3,020	47.5	3,085	48.7	3,155	55,900	88%
Ramshot LRT	54.6	2,835	56.1	2,910	57.7	2,990	59.2	3,070	60.7	3,150	53,500	105%
Vihtavuori N160	42.8	2,870	44.0	2,930	45.1	2,990	46.3	3,055	47.5	3,120	56,000	87%
Vihtavuori N165	45.3	2,860	46.5	2,920	47.8	2,990	49.0	3,050	50.3	3,120	55,800	92%

100 gr Bullet · 25" barrel

COAL: 2.785" • Bullet length: 1.065" • Seat depth: 0.450" • Usable capacity: 61.0 / 66.0 gr H_2O

Powder	STEP 1 · 90%		STEP 2		STEP 3		STEP 4		STEP 5 · LIMIT			
	gr	fps	gr	fps	gr	fps	gr	fps	gr	fps	psi	Fill
Alliant Reloder 26	47.7	2,945	49.0	3,015	50.4	3,090	51.7	3,155	53.0	3,225	55,900	87%
Ramshot Grand	50.9	2,920	52.3	2,990	53.7	3,065	55.1	3,135	56.5	3,210	55,900	94%
Hodgdon Retumbo	50.3	2,910	51.7	2,980	53.1	3,050	54.5	3,125	55.9	3,195	55,900	95%
Vihtavuori N570	49.7	2,900	51.1	2,970	52.5	3,045	53.8	3,110	55.2	3,185	55,900	93%
Accurate MagPro	49.7	2,890	51.1	2,960	52.5	3,035	53.8	3,105	55.2	3,180	55,900	92%
Ramshot LRT	56.1	2,855	57.6	2,930	59.2	3,005	60.8	3,085	62.3	3,165	55,900	104%
Alliant Reloder 23	44.7	2,900	46.0	2,970	47.2	3,030	48.5	3,100	49.7	3,160	56,000	88%
Alliant Reloder 22	45.5	2,885	46.8	2,955	48.0	3,015	49.3	3,085	50.6	3,155	55,900	88%
Ramshot Magnum	50.6	2,870	52.0	2,940	53.4	3,010	54.8	3,080	56.2	3,155	55,900	92%
Reload Swiss RS76	50.4	2,875	51.8	2,945	53.2	3,015	54.6	3,085	56.0	3,155	55,700	93%
Alliant Reloder 25	48.2	2,865	49.5	2,935	50.9	3,005	52.2	3,075	53.5	3,140	56,000	96%
IMR 4831	43.9	2,865	45.1	2,935	46.3	3,000	47.6	3,070	48.8	3,135	55,900	86%
Winchester StaBALL HD	51.1	2,855	52.5	2,920	54.0	2,995	55.4	3,065	56.8	3,135	55,900	95%
Hodgdon H1000	47.8	2,850	49.1	2,915	50.5	2,985	51.8	3,055	53.1	3,120	55,900	94%
IMR 4350	42.6	2,870	43.8	2,930	45.0	2,995	46.1	3,055	47.3	3,120	55,900	83%
Hodgdon H4831SC	45.3	2,855	46.5	2,915	47.8	2,985	49.0	3,050	50.3	3,115	55,900	83%
IMR 7977	48.2	2,815	49.5	2,880	50.9	2,955	52.2	3,020	53.5	3,090	55,800	95%
Alliant Reloder 19	44.0	2,820	45.2	2,885	46.5	2,955	47.7	3,020	48.9	3,085	55,800	85%
Hodgdon H50BMG	55.6	2,760	57.1	2,835	58.7	2,910	60.3	2,990	61.8	3,060	55,800	103%
Vihtavuori N170	48.2	2,790	49.6	2,855	50.9	2,915	52.3	2,980	53.6	3,045	55,800	91%

105 gr Bullet · 25" barrel

COAL: 2.591" • Bullet length: 1.221" • Seat depth: 0.800" • Usable capacity: 57.8 / 66.0 gr H_2O

Powder	STEP 1 · 90%		STEP 2		STEP 3		STEP 4		STEP 5 · LIMIT			
	gr	fps	gr	fps	gr	fps	gr	fps	gr	fps	psi	Fill
Alliant Reloder 26	45.8	2,875	47.1	2,945	48.3	3,010	49.6	3,080	50.9	3,150	55,800	88%
Ramshot Grand	48.8	2,845	50.1	2,910	51.5	2,985	52.9	3,060	54.2	3,130	55,700	95%
Vihtavuori N570	48.0	2,845	49.3	2,915	50.6	2,980	52.0	3,055	53.3	3,125	55,900	95%
Hodgdon Retumbo	48.4	2,845	49.8	2,915	51.1	2,980	52.4	3,050	53.8	3,120	55,900	97%
Accurate MagPro	47.7	2,820	49.0	2,890	50.4	2,960	51.7	3,030	53.0	3,100	55,800	94%
Alliant Reloder 23	43.0	2,835	44.2	2,895	45.4	2,960	46.6	3,025	47.8	3,090	55,900	90%
Alliant Reloder 22	43.7	2,815	44.9	2,880	46.2	2,950	47.4	3,015	48.6	3,080	55,800	89%
Ramshot Magnum	48.6	2,800	50.0	2,875	51.3	2,940	52.6	3,010	54.0	3,080	55,800	94%
Ramshot LRT	53.6	2,770	55.1	2,845	56.6	2,920	58.1	2,995	59.6	3,075	55,200	105%
IMR 8133	48.7	2,780	50.1	2,855	51.4	2,920	52.8	2,995	54.1	3,065	55,800	97%
Winchester StaBALL HD	49.2	2,790	50.6	2,860	52.0	2,930	53.3	2,995	54.7	3,065	56,000	96%
Vihtavuori N565	45.5	2,790	46.8	2,855	48.0	2,920	49.3	2,985	50.6	3,055	55,800	92%
Hodgdon H1000	45.9	2,780	47.2	2,845	48.5	2,915	49.7	2,980	51.0	3,045	55,900	96%
Vihtavuori N560	44.2	2,800	45.4	2,860	46.7	2,925	47.9	2,985	49.1	3,045	55,900	89%
Hodgdon H4831SC	43.5	2,785	44.7	2,850	45.9	2,915	47.1	2,975	48.3	3,040	55,800	84%
Norma MRP	43.4	2,775	44.6	2,840	45.8	2,905	47.0	2,965	48.2	3,030	55,900	87%
Ramshot Hunter	41.8	2,770	42.9	2,830	44.1	2,895	45.3	2,960	46.4	3,020	55,900	85%
IMR 7828SSC	43.1	2,755	44.3	2,815	45.5	2,880	46.7	2,945	47.9	3,005	55,800	86%
Hodgdon H50BMG	53.5	2,700	55.0	2,775	56.5	2,845	57.9	2,915	59.4	2,990	55,900	105%
Vihtavuori N170	46.4	2,725	47.7	2,790	49.0	2,850	50.3	2,910	51.6	2,975	56,000	93%

115 gr Bullet · 25" barrel

COAL: 2.591" • Bullet length: 1.342" • Seat depth: 0.921" • Usable capacity: 56.8 / 66.0 gr H_2O

Powder	STEP 1 · 90%		STEP 2		STEP 3		STEP 4		STEP 5 · LIMIT			
	gr	fps	gr	fps	gr	fps	gr	fps	gr	fps	psi	Fill
Alliant Reloder 26	44.3	2,760	45.5	2,825	46.8	2,890	48.0	2,955	49.2	3,015	55,900	87%
Ramshot Grand	47.4	2,740	48.7	2,805	50.0	2,870	51.4	2,945	52.7	3,010	55,900	95%
Vihtavuori N570	46.2	2,740	47.5	2,810	48.8	2,875	50.0	2,935	51.3	3,005	55,800	93%
Hodgdon Retumbo	46.9	2,735	48.2	2,800	49.5	2,865	50.8	2,930	52.1	2,995	55,800	95%
Accurate MagPro	46.4	2,725	47.7	2,790	49.0	2,860	50.2	2,920	51.5	2,990	55,900	93%
Ramshot LRT	52.4	2,695	53.9	2,770	55.3	2,840	56.8	2,915	58.2	2,985	55,900	104%
Ramshot Magnum	47.2	2,705	48.5	2,770	49.8	2,840	51.1	2,905	52.4	2,970	55,900	93%
IMR 8133	47.3	2,685	48.6	2,750	49.9	2,820	51.2	2,885	52.5	2,955	55,800	96%
Reload Swiss RS76	47.0	2,695	48.3	2,760	49.6	2,825	50.9	2,890	52.2	2,950	55,800	93%
Alliant Reloder 22	42.2	2,700	43.4	2,760	44.5	2,820	45.7	2,880	46.9	2,945	55,800	88%
Winchester StaBALL HD	47.7	2,685	49.0	2,745	50.4	2,815	51.7	2,880	53.0	2,945	55,900	95%
Vihtavuori N568	46.3	2,665	47.6	2,735	48.8	2,800	50.1	2,870	51.4	2,940	55,800	94%
IMR 4831	40.9	2,685	42.0	2,745	43.1	2,805	44.3	2,870	45.4	2,930	55,900	86%
Hodgdon H1000	44.4	2,670	45.6	2,730	46.8	2,790	48.1	2,860	49.3	2,920	55,800	94%
Hodgdon H4831SC	42.0	2,665	43.2	2,725	44.4	2,790	45.5	2,845	46.7	2,910	55,900	83%
IMR 7977	44.8	2,640	46.0	2,700	47.3	2,770	48.5	2,830	49.8	2,895	55,800	95%
Norma MRP	41.9	2,655	43.0	2,715	44.2	2,775	45.4	2,835	46.5	2,895	55,900	85%
Hodgdon H50BMG	51.9	2,610	53.4	2,685	54.8	2,750	56.3	2,820	57.7	2,890	55,900	104%
Vihtavuori N560	42.3	2,660	43.5	2,720	44.6	2,775	45.8	2,830	47.0	2,890	55,800	87%
IMR 7828SSC	41.6	2,640	42.8	2,700	43.9	2,760	45.1	2,820	46.2	2,875	56,000	85%

6x45 (6mm-223)

The 6x45mm is also called the 6mm-223. It is a wildcat cartridge formed by necking the .223 Remington case up to accept .243-inch bullets without other changes. Shooters began experimenting with the conversion soon after the .223 Remington became available commercially. Benchrest shooters took notice of its accuracy. In 1973 a 6x45mm rifle set an aggregate record in the International Benchrest Shooters (IBS) 200-yard Sporter category. Its competitive use declined after the 6mm BR and 6mm PPC appeared.

The 6x45mm can use heavier bullets with higher ballistic coefficients than the .223 Remington. Its small powder charge brings long barrel life, low recoil and modest muzzle blast. Cases are formed simply by running .223 Remington brass through a 6x45mm die. Although the wildcat itself has not been formally standardized by SAAMI or the C.I.P., load data and simulations follow the parent .223 Remington SAAMI pressure limit of 55,000 psi. No major ammunition maker has loaded it commercially, though specialty rifle makers chamber it. It may meet minimum-caliber rules for deer in some jurisdictions, where it is considered marginal.

Cartridge specifications	
Bullet Diameter	**0.243" (6.17 mm)**
Max Case Length	**1.760" (44.70 mm)**
Case Trim Length	**1.750" (44.45 mm)**
Max COAL	**2.250" (57.15 mm)**
Primer Pocket	**Small Rifle**
Standard Twist	**1:10"**
Case Capacity	**30.1 gr H_2O**
Max Pressure	**55,000 psi (SAAMI)**

60 gr Bullet · 25" barrel

COAL: 2.250" • Bullet length: 0.772" • Seat depth: 0.281" • Usable capacity: 26.9 / 30.1 gr H_2O

Powder	STEP 1 · 90%		STEP 2		STEP 3		STEP 4		STEP 5 · LIMIT			
	gr	fps	gr	fps	gr	fps	gr	fps	gr	fps	psi	Fill
Hodgdon CFE BLK	23.4	3,200	24.0	3,270	24.7	3,345	25.4	3,425	26.0	3,490	55,000	99%
Shooters World SBR-SOCOM	20.0	3,145	20.6	3,215	21.1	3,275	21.6	3,335	22.2	3,410	54,900	85%
Alliant Power Pro 1200-R	23.9	3,050	24.6	3,125	25.3	3,200	25.9	3,265	26.6	3,340	54,800	101%
Norma 200	23.4	3,035	24.0	3,100	24.7	3,180	25.4	3,255	26.0	3,320	53,900	105%
Shooters World AR Plus	24.5	3,030	25.2	3,105	25.9	3,180	26.5	3,240	27.2	3,315	54,800	102%
Accurate 1680	21.4	3,040	22.0	3,105	22.6	3,170	23.2	3,240	23.8	3,305	54,700	91%
Alliant Power Pro 300-MP	18.2	3,055	18.7	3,115	19.2	3,180	19.7	3,240	20.2	3,300	54,900	83%
Alliant Reloder 7	22.1	3,010	22.7	3,075	23.4	3,150	24.0	3,220	24.6	3,285	54,600	97%
Ramshot X-Terminator	25.1	3,000	25.8	3,070	26.5	3,145	27.2	3,215	27.9	3,285	52,000	105%
Hodgdon H4198	21.4	3,000	22.0	3,065	22.6	3,135	23.2	3,200	23.8	3,270	54,600	101%
Reload Swiss RS40	23.9	2,980	24.6	3,055	25.3	3,130	25.9	3,195	26.6	3,270	52,100	105%
Shooters World The Patriot	24.4	2,975	25.1	3,050	25.8	3,120	26.4	3,185	27.1	3,255	53,000	105%
Accurate LT-32	23.0	2,950	23.6	3,010	24.3	3,090	25.0	3,165	25.6	3,230	51,800	105%
Accurate 2015	23.8	2,945	24.4	3,010	25.1	3,085	25.8	3,160	26.4	3,225	54,900	102%
IMR 4198	21.2	2,965	21.8	3,030	22.4	3,095	22.9	3,150	23.5	3,220	54,100	105%
Vihtavuori N120	20.0	2,970	20.6	3,040	21.1	3,095	21.6	3,155	22.2	3,220	54,800	96%
Accurate LT-30	22.0	2,950	22.6	3,015	23.2	3,080	23.8	3,145	24.4	3,210	54,400	91%
Hodgdon H335	24.8	2,880	25.5	2,950	26.2	3,025	26.9	3,095	27.6	3,170	54,700	101%
Accurate 2495	25.2	2,865	25.9	2,940	26.6	3,015	27.3	3,085	28.0	3,160	54,100	105%
Hodgdon H322	23.1	2,865	23.8	2,940	24.4	3,005	25.1	3,080	25.7	3,145	54,500	101%

70 gr Bullet · 25" barrel

COAL: 2.250" • Bullet length: 0.866" • Seat depth: 0.376" • Usable capacity: 25.9 / 30.1 gr H_2O

Powder	STEP 1 · 90%		STEP 2		STEP 3		STEP 4		STEP 5 · LIMIT			
	gr	fps	gr	fps	gr	fps	gr	fps	gr	fps	psi	Fill
Hodgdon CFE BLK	22.1	2,945	22.7	3,010	23.3	3,075	23.9	3,140	24.5	3,205	54,500	97%
Alliant Power Pro 1200-R	22.6	2,845	23.2	2,905	23.9	2,980	24.5	3,045	25.1	3,105	54,700	99%
Norma 200	22.1	2,840	22.7	2,905	23.4	2,980	24.0	3,045	24.6	3,105	54,800	103%
Shooters World SBR-SOCOM	18.6	2,855	19.1	2,915	19.6	2,975	20.2	3,050	20.7	3,105	54,400	82%
Reload Swiss RS40	23.0	2,815	23.6	2,875	24.3	2,950	25.0	3,020	25.6	3,085	54,300	105%
Shooters World AR Plus	23.2	2,815	23.9	2,890	24.5	2,950	25.1	3,010	25.8	3,085	54,800	101%
Ramshot X-Terminator	23.9	2,815	24.6	2,880	25.3	2,950	25.9	3,010	26.6	3,080	54,800	104%
Accurate 2460	24.4	2,810	25.1	2,880	25.8	2,950	26.4	3,005	27.1	3,075	51,900	105%
Accurate 2230	24.0	2,805	24.7	2,875	25.4	2,945	26.0	3,000	26.7	3,070	54,900	104%
Vihtavuori N130	21.3	2,805	21.9	2,870	22.5	2,935	23.1	2,995	23.7	3,060	52,700	105%
Accurate LT-32	22.2	2,785	22.8	2,850	23.4	2,910	24.1	2,985	24.7	3,050	54,400	105%
Shooters World The Patriot	23.3	2,785	23.9	2,850	24.6	2,920	25.3	2,990	25.9	3,050	54,800	104%
Alliant Reloder 7	20.8	2,780	21.4	2,845	22.0	2,910	22.5	2,960	23.1	3,025	54,500	95%
Hodgdon H4198	20.2	2,770	20.8	2,835	21.3	2,890	21.8	2,945	22.4	3,010	54,400	99%
Accurate 2015	22.5	2,735	23.1	2,795	23.8	2,870	24.4	2,935	25.0	2,995	54,600	100%
Accurate 2495	24.0	2,715	24.7	2,785	25.4	2,855	26.0	2,920	26.7	2,990	54,800	104%
Shooters World Tactical Rifle	23.6	2,710	24.3	2,785	24.9	2,845	25.6	2,915	26.2	2,980	54,700	104%
Hodgdon H335	23.6	2,705	24.3	2,775	24.9	2,840	25.6	2,910	26.2	2,970	54,800	100%
IMR 4198	19.9	2,725	20.4	2,780	21.0	2,845	21.6	2,910	22.1	2,965	54,800	102%
Hodgdon H322	22.0	2,690	22.6	2,750	23.2	2,815	23.8	2,875	24.4	2,940	54,900	100%

75 gr Bullet · 25" barrel

COAL: 2.250" • Bullet length: 0.879" • Seat depth: 0.388" • Usable capacity: 25.8 / 30.1 gr H_2O

Powder	STEP 1 · 90%		STEP 2		STEP 3		STEP 4		STEP 5 · LIMIT			
	gr	fps	gr	fps	gr	fps	gr	fps	gr	fps	psi	Fill
Hodgdon CFE BLK	21.6	2,830	22.2	2,890	22.8	2,955	23.4	3,020	24.0	3,080	54,500	96%
Accurate 2460	24.2	2,750	24.9	2,820	25.5	2,875	26.2	2,945	26.9	3,015	54,500	105%
Alliant Power Pro 1200-R	22.1	2,750	22.7	2,810	23.4	2,885	24.0	2,945	24.6	3,005	54,900	97%
Norma 200	21.6	2,745	22.2	2,810	22.8	2,875	23.4	2,935	24.0	3,000	54,800	101%
Reload Swiss RS40	22.7	2,735	23.3	2,800	23.9	2,860	24.6	2,930	25.2	2,995	54,600	104%
Vihtavuori N130	21.2	2,745	21.8	2,810	22.4	2,870	22.9	2,925	23.5	2,985	54,500	105%
Shooters World AR Plus	22.8	2,730	23.4	2,790	24.1	2,860	24.7	2,920	25.3	2,980	54,600	99%
Ramshot X-Terminator	23.3	2,710	23.9	2,770	24.6	2,835	25.3	2,905	25.9	2,960	54,700	102%
Accurate 2230	23.4	2,705	24.0	2,760	24.7	2,830	25.4	2,895	26.0	2,955	55,000	102%
Accurate LT-32	21.9	2,705	22.5	2,765	23.1	2,830	23.7	2,890	24.3	2,955	54,700	104%
Hodgdon H4895	23.5	2,695	24.1	2,755	24.8	2,825	25.5	2,895	26.1	2,955	53,400	105%
Shooters World The Patriot	22.9	2,700	23.5	2,760	24.1	2,820	24.8	2,890	25.4	2,950	54,900	102%
Alliant Reloder 10x	21.3	2,680	21.9	2,745	22.5	2,810	23.1	2,875	23.7	2,935	54,500	104%
Accurate 2200	21.4	2,675	22.0	2,740	22.6	2,800	23.2	2,865	23.8	2,925	53,700	105%
Accurate 2495	23.6	2,645	24.3	2,715	24.9	2,775	25.6	2,845	26.2	2,910	54,600	102%
Accurate 2015	22.1	2,650	22.7	2,710	23.4	2,780	24.0	2,845	24.6	2,905	54,800	99%
Hodgdon H4198	19.8	2,670	20.4	2,735	20.9	2,785	21.4	2,840	22.0	2,905	54,900	98%
Shooters World Tactical Rifle	23.1	2,630	23.8	2,700	24.4	2,760	25.1	2,830	25.7	2,890	54,500	103%
Hodgdon H335	23.1	2,620	23.8	2,690	24.4	2,750	25.1	2,820	25.7	2,880	54,700	99%
Hodgdon H322	21.5	2,595	22.1	2,655	22.7	2,720	23.3	2,780	23.9	2,840	54,600	98%

80 gr Bullet · 25" barrel

COAL: 2.250" • Bullet length: 0.904" • Seat depth: 0.414" • Usable capacity: 25.4 / 30.1 gr H_2O

Powder	STEP 1 · 90%		STEP 2		STEP 3		STEP 4		STEP 5 · LIMIT			
	gr	fps	gr	fps	gr	fps	gr	fps	gr	fps	psi	Fill
Hodgdon CFE BLK	21.1	2,725	21.7	2,790	22.3	2,850	22.8	2,905	23.4	2,965	54,400	95%
Accurate 2460	23.6	2,660	24.3	2,725	24.9	2,785	25.6	2,850	26.2	2,910	54,800	103%
Alliant Power Pro 1200-R	21.5	2,655	22.1	2,715	22.7	2,775	23.3	2,835	23.9	2,900	54,500	96%
Reload Swiss RS40	22.1	2,640	22.7	2,700	23.4	2,775	24.0	2,835	24.6	2,895	54,500	103%
Norma 200	21.0	2,655	21.6	2,715	22.1	2,765	22.7	2,830	23.3	2,890	54,600	99%
Hodgdon H4895	23.1	2,630	23.8	2,695	24.4	2,755	25.1	2,825	25.7	2,885	54,600	105%
Shooters World AR Plus	22.2	2,630	22.8	2,690	23.4	2,750	24.1	2,820	24.7	2,880	54,400	98%
IMR 3031	22.5	2,625	23.1	2,685	23.8	2,755	24.4	2,815	25.0	2,875	52,500	105%
Alliant Reloder 10x	20.9	2,610	21.5	2,670	22.0	2,725	22.6	2,785	23.2	2,850	54,800	103%
Ramshot X-Terminator	22.6	2,610	23.2	2,665	23.9	2,730	24.5	2,790	25.1	2,845	54,500	100%
Accurate 2230	22.7	2,605	23.3	2,660	23.9	2,715	24.6	2,780	25.2	2,840	54,800	100%
Shooters World The Patriot	22.2	2,595	22.8	2,650	23.4	2,710	24.1	2,780	24.7	2,840	54,500	101%
Accurate 2495	23.0	2,565	23.6	2,625	24.3	2,695	25.0	2,765	25.6	2,825	54,400	101%
Shooters World Tactical Rifle	22.7	2,565	23.3	2,625	23.9	2,685	24.6	2,755	25.2	2,815	55,000	102%
Alliant Reloder 7	19.8	2,580	20.4	2,645	20.9	2,695	21.4	2,745	22.0	2,810	54,800	92%
Accurate 2015	21.6	2,565	22.2	2,625	22.8	2,685	23.4	2,745	24.0	2,805	54,500	98%
Hodgdon H4198	19.3	2,570	19.8	2,625	20.4	2,690	20.9	2,740	21.4	2,795	54,700	97%
Hodgdon H335	22.6	2,545	23.2	2,600	23.9	2,670	24.5	2,730	25.1	2,785	54,600	98%
IMR 4320	23.9	2,525	24.5	2,585	25.2	2,655	25.9	2,720	26.5	2,785	54,700	105%
Hodgdon H322	21.1	2,525	21.7	2,585	22.3	2,645	22.8	2,695	23.4	2,755	54,900	98%

85 gr Bullet · 25" barrel

COAL: 2.250" • Bullet length: 0.940" • Seat depth: 0.450" • Usable capacity: 25.1 / 30.1 gr H_2O

Powder	STEP 1 · 90%		STEP 2		STEP 3		STEP 4		STEP 5 · LIMIT			
	gr	fps	gr	fps	gr	fps	gr	fps	gr	fps	psi	Fill
Hodgdon CFE BLK	20.6	2,630	21.2	2,690	21.8	2,750	22.3	2,800	22.9	2,865	54,800	94%
Hodgdon Leverevolution	24.8	2,605	25.5	2,670	26.1	2,725	26.8	2,795	27.5	2,860	52,500	105%
Alliant AR-Comp	22.1	2,580	22.7	2,640	23.3	2,695	23.9	2,755	24.5	2,815	52,400	105%
Accurate 2460	23.0	2,570	23.6	2,630	24.3	2,695	24.9	2,750	25.5	2,810	54,800	102%
Alliant Power Pro 1200-R	21.1	2,580	21.7	2,640	22.3	2,700	22.8	2,750	23.4	2,810	55,000	95%
IMR 3031	22.1	2,555	22.7	2,615	23.4	2,685	24.0	2,745	24.6	2,805	53,500	105%
Reload Swiss RS40	21.7	2,565	22.3	2,630	22.9	2,685	23.5	2,745	24.1	2,805	54,800	102%
Hodgdon H4895	22.6	2,555	23.2	2,610	23.9	2,680	24.5	2,740	25.1	2,795	54,500	104%
Norma 200	20.4	2,560	21.0	2,625	21.5	2,675	22.1	2,735	22.7	2,795	54,700	98%
Shooters World AR Plus	21.8	2,555	22.4	2,615	23.0	2,675	23.6	2,735	24.2	2,795	54,700	98%
Vihtavuori N130	20.1	2,555	20.7	2,615	21.2	2,670	21.8	2,730	22.3	2,780	54,700	102%
Accurate LT-32	20.9	2,530	21.5	2,590	22.0	2,640	22.6	2,700	23.2	2,765	54,600	102%
Accurate 2495	22.6	2,505	23.2	2,565	23.9	2,630	24.5	2,690	25.1	2,750	54,800	101%
Ramshot X-Terminator	22.0	2,520	22.6	2,575	23.2	2,630	23.8	2,685	24.4	2,745	54,600	99%
Shooters World The Patriot	21.7	2,510	22.3	2,570	22.9	2,625	23.5	2,685	24.1	2,740	54,500	100%
Shooters World Tactical Rifle	22.1	2,485	22.7	2,540	23.4	2,610	24.0	2,670	24.6	2,730	54,700	101%
Accurate 2230	22.0	2,505	22.6	2,560	23.2	2,615	23.8	2,670	24.4	2,725	54,500	99%
Accurate 2015	21.2	2,490	21.8	2,550	22.4	2,610	22.9	2,660	23.5	2,720	54,600	97%
Hodgdon H335	22.1	2,470	22.7	2,525	23.4	2,595	24.0	2,650	24.6	2,710	54,900	97%
Hodgdon H322	20.5	2,430	21.1	2,490	21.6	2,540	22.2	2,600	22.8	2,660	54,500	97%

90 gr Bullet · 25" barrel

COAL: 2.250" • Bullet length: 0.996" • Seat depth: 0.506" • Usable capacity: 24.6 / 30.1 gr H_2O

Powder	STEP 1 · 90%		STEP 2		STEP 3		STEP 4		STEP 5 · LIMIT			
	gr	fps	gr	fps	gr	fps	gr	fps	gr	fps	psi	Fill
Hodgdon Leverevolution	24.3	2,540	25.0	2,605	25.6	2,665	26.3	2,730	27.0	2,795	53,400	105%
Hodgdon CFE BLK	20.1	2,540	20.7	2,600	21.2	2,650	21.8	2,710	22.3	2,760	54,900	93%
Alliant AR-Comp	21.6	2,505	22.2	2,560	22.8	2,620	23.4	2,675	24.0	2,735	53,600	105%
IMR 3031	21.7	2,495	22.3	2,555	22.9	2,615	23.5	2,675	24.1	2,730	54,300	105%
Reload Swiss RS40	21.2	2,490	21.8	2,550	22.4	2,610	22.9	2,660	23.5	2,720	54,800	102%
Hodgdon H4895	22.1	2,485	22.7	2,540	23.3	2,600	23.9	2,660	24.5	2,715	54,900	103%
Alliant Power Pro 1200-R	20.4	2,480	21.0	2,540	21.5	2,590	22.1	2,650	22.7	2,710	54,700	94%
Accurate 2460	22.2	2,470	22.8	2,525	23.4	2,585	24.1	2,650	24.7	2,705	54,500	101%
Shooters World AR Plus	21.2	2,470	21.8	2,525	22.4	2,585	23.0	2,645	23.6	2,705	54,800	97%
Accurate 2495	22.1	2,440	22.7	2,495	23.3	2,555	23.9	2,615	24.5	2,675	55,000	100%
Accurate LT-32	20.3	2,440	20.9	2,500	21.5	2,560	22.0	2,610	22.6	2,670	54,700	101%
Shooters World The Patriot	21.2	2,435	21.8	2,490	22.4	2,550	22.9	2,595	23.5	2,655	54,900	99%
Hodgdon Varget	22.3	2,410	22.9	2,465	23.6	2,535	24.2	2,590	24.8	2,650	52,200	105%
Ramshot X-Terminator	21.3	2,425	21.9	2,480	22.5	2,535	23.1	2,590	23.7	2,650	54,800	98%
Shooters World Tactical Rifle	21.6	2,415	22.2	2,475	22.8	2,530	23.4	2,590	24.0	2,650	54,900	101%
Accurate 2015	20.6	2,400	21.2	2,460	21.8	2,520	22.3	2,570	22.9	2,630	54,600	97%
Accurate 2230	21.3	2,410	21.9	2,465	22.5	2,520	23.1	2,575	23.7	2,630	54,800	98%
IMR 4320	22.8	2,390	23.4	2,450	24.1	2,515	24.7	2,575	25.3	2,630	54,400	104%
Hodgdon H335	21.6	2,400	22.2	2,455	22.8	2,510	23.4	2,570	24.0	2,625	55,000	97%
Hodgdon H322	20.0	2,355	20.6	2,415	21.1	2,465	21.6	2,515	22.2	2,575	54,500	96%

95 gr Bullet · 25" barrel

COAL: 2.250" • Bullet length: 1.131" • Seat depth: 0.640" • Usable capacity: 23.5 / 30.1 gr H_2O

Powder	STEP 1 · 90%		STEP 2		STEP 3		STEP 4		STEP 5 · LIMIT			
	gr	fps	gr	fps	gr	fps	gr	fps	gr	fps	psi	Fill
Hodgdon Leverevolution	23.2	2,440	23.9	2,505	24.5	2,560	25.1	2,620	25.8	2,685	52,400	105%
Hodgdon CFE BLK	19.3	2,440	19.8	2,495	20.4	2,555	20.9	2,605	21.4	2,655	54,700	94%
Alliant AR-Comp	20.7	2,405	21.3	2,465	21.9	2,525	22.4	2,570	23.0	2,630	53,300	105%
IMR 3031	20.8	2,405	21.4	2,465	22.0	2,520	22.5	2,570	23.1	2,630	54,100	105%
Reload Swiss RS40	20.3	2,395	20.9	2,455	21.5	2,510	22.0	2,560	22.6	2,620	54,900	102%
Alliant Power Pro 1200-R	19.6	2,395	20.2	2,455	20.7	2,505	21.3	2,565	21.8	2,615	54,800	94%
Hodgdon H4895	21.2	2,395	21.8	2,450	22.4	2,510	22.9	2,560	23.5	2,615	54,700	103%
Accurate 2460	21.3	2,380	21.9	2,435	22.5	2,490	23.1	2,550	23.7	2,605	54,600	101%
Shooters World AR Plus	20.4	2,380	21.0	2,440	21.5	2,490	22.1	2,545	22.7	2,605	54,900	98%
Accurate 2495	21.2	2,350	21.8	2,410	22.4	2,470	22.9	2,520	23.5	2,575	54,800	101%
Alliant Reloder 10x	19.1	2,360	19.6	2,410	20.1	2,460	20.7	2,525	21.2	2,575	54,700	102%
Accurate 2200	19.3	2,350	19.8	2,405	20.4	2,465	20.9	2,515	21.4	2,565	54,600	103%
IMR 4320	22.0	2,320	22.6	2,375	23.2	2,435	23.8	2,490	24.4	2,550	54,900	104%
Shooters World Tactical Rifle	20.7	2,325	21.3	2,385	21.9	2,445	22.4	2,495	23.0	2,550	54,500	101%
Shooters World The Patriot	20.3	2,340	20.9	2,395	21.4	2,445	21.9	2,490	22.5	2,550	54,600	99%
Ramshot X-Terminator	20.4	2,330	21.0	2,385	21.5	2,435	22.1	2,490	22.7	2,545	54,500	98%
Accurate 2015	19.8	2,315	20.4	2,375	20.9	2,425	21.4	2,475	22.0	2,535	54,500	97%
Accurate 2230	20.4	2,315	21.0	2,370	21.5	2,420	22.1	2,475	22.7	2,530	54,500	98%
Hodgdon H335	20.7	2,305	21.3	2,365	21.9	2,420	22.4	2,470	23.0	2,525	54,500	97%
Hodgdon H322	19.2	2,270	19.7	2,320	20.3	2,380	20.8	2,430	21.3	2,480	54,400	96%

100 gr Bullet · 25" barrel

COAL: 2.250" • Bullet length: 1.130" • Seat depth: 0.640" • Usable capacity: 23.2 / 30.1 gr H_2O

Powder	STEP 1 · 90%		STEP 2		STEP 3		STEP 4		STEP 5 · LIMIT			
	gr	fps	gr	fps	gr	fps	gr	fps	gr	fps	psi	Fill
Hodgdon Leverevolution	23.0	2,390	23.6	2,445	24.3	2,510	24.9	2,570	25.5	2,625	53,600	105%
Vihtavuori N530	20.4	2,365	21.0	2,420	21.5	2,470	22.1	2,525	22.7	2,585	53,200	105%
Hodgdon CFE BLK	18.8	2,340	19.3	2,395	19.9	2,455	20.4	2,505	20.9	2,555	54,600	93%
IMR 3031	20.4	2,330	21.0	2,385	21.5	2,435	22.1	2,495	22.7	2,555	54,700	104%
Alliant AR-Comp	20.3	2,325	20.9	2,385	21.5	2,440	22.0	2,490	22.6	2,550	54,400	104%
Hodgdon H4895	20.7	2,310	21.3	2,370	21.9	2,425	22.4	2,475	23.0	2,530	54,700	102%
Reload Swiss RS40	19.9	2,315	20.4	2,365	21.0	2,420	21.6	2,480	22.1	2,530	54,700	101%
Accurate 2460	20.8	2,295	21.4	2,350	22.0	2,405	22.5	2,455	23.1	2,510	54,600	100%
Accurate 2495	20.7	2,270	21.3	2,330	21.9	2,390	22.4	2,435	23.0	2,495	54,600	100%
Shooters World Match Rifle	21.3	2,265	21.9	2,320	22.5	2,380	23.1	2,435	23.7	2,495	52,300	105%
Accurate LT-32	19.2	2,280	19.7	2,330	20.3	2,390	20.8	2,440	21.3	2,490	55,000	101%
Accurate 2200	18.9	2,270	19.4	2,320	19.9	2,370	20.5	2,430	21.0	2,480	54,900	102%
Alliant Power Pro Varmint	20.8	2,260	21.4	2,315	22.0	2,375	22.5	2,420	23.1	2,480	52,500	105%
Winchester 748	21.3	2,250	21.9	2,305	22.5	2,360	23.1	2,420	23.7	2,475	51,900	105%
Shooters World The Patriot	19.8	2,250	20.4	2,305	20.9	2,355	21.4	2,400	22.0	2,460	54,700	98%
Accurate 2015	19.4	2,235	19.9	2,285	20.5	2,345	21.1	2,400	21.6	2,450	54,800	96%
Hodgdon H335	20.3	2,230	20.9	2,290	21.5	2,345	22.0	2,395	22.6	2,450	55,000	96%
Ramshot X-Terminator	19.9	2,245	20.4	2,290	21.0	2,345	21.6	2,400	22.1	2,450	54,600	96%
Accurate 2230	19.9	2,230	20.4	2,275	21.0	2,330	21.6	2,385	22.1	2,435	54,700	96%
Hodgdon H322	18.8	2,190	19.3	2,240	19.9	2,300	20.4	2,350	20.9	2,400	54,700	95%

105 gr Bullet · 25" barrel

COAL: 2.250" • Bullet length: 1.221" • Seat depth: 0.731" • Usable capacity: 22.4 / 30.1 gr H_2O

Powder	STEP 1 · 90%		STEP 2		STEP 3		STEP 4		STEP 5 · LIMIT			
	gr	fps	gr	fps	gr	fps	gr	fps	gr	fps	psi	Fill
Hodgdon Leverevolution	22.1	2,300	22.7	2,355	23.4	2,420	24.0	2,480	24.6	2,535	53,500	105%
Vihtavuori N530	19.7	2,285	20.3	2,345	20.8	2,390	21.3	2,440	21.9	2,500	53,300	105%
Hodgdon CFE BLK	18.2	2,260	18.7	2,310	19.2	2,365	19.7	2,415	20.2	2,465	54,900	93%
IMR 3031	19.7	2,250	20.3	2,310	20.8	2,355	21.3	2,405	21.9	2,465	54,800	104%
Alliant AR-Comp	19.6	2,245	20.2	2,300	20.7	2,350	21.3	2,410	21.8	2,455	54,600	104%
Hodgdon H4895	20.0	2,235	20.6	2,290	21.1	2,340	21.6	2,390	22.2	2,445	54,800	103%
Reload Swiss RS40	19.2	2,230	19.7	2,280	20.3	2,340	20.8	2,390	21.3	2,440	54,500	101%
Accurate 2460	20.1	2,215	20.7	2,270	21.2	2,320	21.8	2,375	22.3	2,420	54,900	100%
Shooters World AR Plus	19.3	2,215	19.8	2,265	20.4	2,325	20.9	2,375	21.4	2,420	54,500	97%
Accurate 2495	20.0	2,195	20.6	2,255	21.1	2,305	21.6	2,350	22.2	2,410	54,700	100%
Shooters World Match Rifle	20.5	2,180	21.1	2,235	21.6	2,285	22.2	2,345	22.8	2,400	51,700	105%
IMR 4320	20.8	2,170	21.4	2,230	22.0	2,285	22.5	2,335	23.1	2,395	54,800	104%
Accurate 2200	18.2	2,185	18.7	2,235	19.2	2,285	19.7	2,335	20.2	2,385	54,500	102%
Alliant Power Pro Varmint	20.0	2,175	20.6	2,230	21.1	2,280	21.6	2,325	22.2	2,385	51,900	105%
Shooters World The Patriot	19.1	2,165	19.6	2,215	20.1	2,260	20.7	2,320	21.2	2,370	54,700	98%
Hodgdon H335	19.6	2,155	20.2	2,210	20.7	2,260	21.3	2,315	21.8	2,365	54,900	96%
Accurate 2015	18.7	2,150	19.2	2,200	19.8	2,260	20.3	2,310	20.8	2,360	54,500	96%
Ramshot X-Terminator	19.2	2,160	19.7	2,210	20.3	2,265	20.8	2,310	21.3	2,360	54,700	96%
Accurate 2230	19.2	2,150	19.7	2,195	20.3	2,250	20.8	2,295	21.3	2,345	54,800	96%
Hodgdon H322	18.1	2,110	18.6	2,160	19.1	2,210	19.6	2,260	20.1	2,310	54,400	95%

6x47 Lapua

The 6x47 Lapua is a wildcat formed by necking the 6.5x47 Lapua case down to 6mm. Lapua of Finland and Swiss rifle maker Grünig & Elmiger developed the parent cartridge in the mid-2000s for 300-meter competition. Shooters began necking it down soon after its release. The wildcat was first called the 6-6.5x47 Lapua. This avoided confusion with the older 6x47mm. That cartridge is a .222 Remington Magnum necked up to 6mm. The 6x47 Lapua is not standardized by SAAMI.

Early chambers produced neck-tension problems that required neck turning. Revised reamer designs later solved the problem. The cartridge keeps its parent's small rifle primer and feeds reliably from detachable magazines. Bullets of 105 to 110 grains are typical at velocities of roughly 2,900 fps. Cases are formed from 6.5x47 Lapua brass with a single pass through a full-length sizing die. The cartridge is used in High Power, F-Class, 600- and 1,000-yard benchrest, tactical and Precision Rifle Series (PRS) matches.

Cartridge specifications	
Bullet Diameter	**0.243" (6.17 mm)**
Max Case Length	**1.850" (47.00 mm)**
Case Trim Length	**1.840" (46.74 mm)**
Max COAL	**2.400" (60.96 mm)**
Primer Pocket	**Small Rifle**
Standard Twist	**1:8"**
Case Capacity	**47.1 gr H_2O**
Max Pressure	**60,000 psi (SAAMI)**

70 gr Bullet · 25" barrel

COAL: 2.400" • Bullet length: 0.898" • Seat depth: 0.348" • Usable capacity: 43.2 / 47.1 gr H_2O

Powder	STEP 1 · 90%		STEP 2		STEP 3		STEP 4		STEP 5 · LIMIT			
	gr	fps	gr	fps	gr	fps	gr	fps	gr	fps	psi	Fill
Vihtavuori N550	38.8	3,315	39.9	3,390	41.0	3,470	42.0	3,540	43.1	3,625	59,900	105%
Hodgdon Leverevolution	36.3	3,305	37.3	3,380	38.3	3,455	39.3	3,530	40.3	3,605	59,800	89%
Vihtavuori N540	35.2	3,250	36.2	3,320	37.2	3,395	38.1	3,460	39.1	3,530	59,800	96%
Reload Swiss RS52	35.1	3,220	36.1	3,300	37.0	3,365	38.0	3,440	39.0	3,520	59,800	95%
Accurate 2520	34.7	3,230	35.7	3,300	36.7	3,375	37.6	3,440	38.6	3,515	59,900	92%
Hodgdon BL-C(2)	35.5	3,215	36.5	3,290	37.5	3,365	38.4	3,435	39.4	3,510	59,600	91%
Alliant Reloder 15	34.8	3,210	35.8	3,285	36.8	3,360	37.7	3,425	38.7	3,500	59,700	96%
Ramshot Big Game	37.7	3,195	38.8	3,275	39.8	3,345	40.9	3,425	41.9	3,500	59,700	99%
Hodgdon H4895	33.0	3,205	33.9	3,275	34.9	3,350	35.8	3,415	36.7	3,485	59,700	88%
IMR 4064	34.0	3,180	35.0	3,255	35.9	3,320	36.8	3,390	37.8	3,465	59,800	94%
Vihtavuori N140	34.5	3,185	35.5	3,255	36.4	3,325	37.3	3,390	38.3	3,465	59,900	90%
Hodgdon Varget	33.9	3,170	34.9	3,245	35.8	3,315	36.8	3,390	37.7	3,460	59,800	91%
Accurate 4064	34.7	3,170	35.7	3,245	36.6	3,315	37.5	3,380	38.5	3,455	59,900	99%
Reload Swiss RS50	35.6	3,165	36.6	3,235	37.6	3,310	38.6	3,385	39.6	3,455	60,000	96%
Norma 203B	34.0	3,135	35.0	3,210	35.9	3,280	36.8	3,345	37.8	3,425	59,900	95%
Hodgdon SUPERFORMANCE	40.6	3,085	41.7	3,165	42.9	3,255	44.0	3,335	45.1	3,420	59,900	102%
Shooters World Precision Rifle	34.2	3,125	35.2	3,200	36.1	3,270	37.0	3,340	38.0	3,415	59,900	97%
IMR 4166	32.9	3,125	33.8	3,195	34.8	3,270	35.7	3,340	36.6	3,410	59,700	94%
Hodgdon H414	37.2	3,070	38.2	3,145	39.3	3,225	40.3	3,295	41.3	3,370	59,900	97%
Vihtavuori N133	30.5	3,110	31.4	3,175	32.2	3,235	33.0	3,295	33.9	3,365	59,800	90%

75 gr Bullet · 25" barrel

COAL: 2.400" • Bullet length: 0.879" • Seat depth: 0.329" • Usable capacity: 43.5 / 47.1 gr H_2O

Powder	STEP 1 · 90%		STEP 2		STEP 3		STEP 4		STEP 5 · LIMIT			
	gr	fps	gr	fps	gr	fps	gr	fps	gr	fps	psi	Fill
Hodgdon Leverevolution	35.8	3,205	36.8	3,280	37.8	3,350	38.8	3,425	39.8	3,500	60,000	87%
Vihtavuori N550	37.9	3,205	39.0	3,280	40.0	3,350	41.0	3,420	42.1	3,495	59,700	102%
Winchester StaBALL 6.5	39.0	3,120	40.1	3,195	41.1	3,265	42.2	3,345	43.3	3,420	60,000	100%
Accurate 4350	39.1	3,095	40.2	3,175	41.3	3,255	42.3	3,330	43.4	3,415	59,700	104%
Hodgdon BL-C(2)	35.1	3,125	36.1	3,200	37.0	3,265	38.0	3,340	39.0	3,415	59,800	90%
Reload Swiss RS52	34.7	3,135	35.7	3,210	36.6	3,275	37.5	3,340	38.5	3,415	59,700	93%
Ramshot Big Game	37.3	3,115	38.3	3,185	39.3	3,255	40.4	3,335	41.4	3,405	59,600	97%
Vihtavuori N540	34.5	3,135	35.5	3,205	36.4	3,270	37.3	3,335	38.3	3,405	59,900	94%
Alliant Reloder 15	34.2	3,115	35.2	3,185	36.1	3,250	37.0	3,315	38.0	3,385	59,900	93%
Hodgdon H4895	32.5	3,100	33.4	3,170	34.3	3,235	35.2	3,300	36.1	3,370	59,800	86%
IMR 4350	38.3	3,065	39.3	3,135	40.4	3,215	41.5	3,295	42.5	3,370	59,900	105%
Vihtavuori N150	34.3	3,095	35.3	3,165	36.2	3,230	37.1	3,295	38.1	3,370	59,900	98%
Winchester StaBALL Match	34.4	3,090	35.4	3,160	36.3	3,225	37.3	3,300	38.2	3,365	59,900	99%
Hodgdon Varget	33.5	3,085	34.4	3,150	35.4	3,225	36.3	3,290	37.2	3,360	59,900	89%
Accurate 4064	34.1	3,070	35.0	3,135	36.0	3,210	37.0	3,285	37.9	3,350	59,700	97%
Vihtavuori N140	33.8	3,075	34.8	3,145	35.7	3,210	36.6	3,275	37.6	3,350	59,900	88%
Shooters World Precision Rifle	33.7	3,035	34.6	3,105	35.5	3,170	36.5	3,245	37.4	3,310	59,600	95%
Alliant Power Pro 4000-MR	38.9	3,000	40.0	3,075	41.0	3,150	42.1	3,225	43.2	3,305	59,900	101%
IMR 4166	32.5	3,035	33.4	3,100	34.3	3,170	35.2	3,235	36.1	3,300	59,600	92%
Reload Swiss RS70	40.1	2,950	41.2	3,025	42.4	3,110	43.5	3,190	44.6	3,270	59,700	103%

80 gr Bullet · 25" barrel

COAL: 2.400" • Bullet length: 0.986" • Seat depth: 0.436" • Usable capacity: 42.2 / 47.1 gr H_2O

Powder	STEP 1 · 90%		STEP 2		STEP 3		STEP 4		STEP 5 · LIMIT			
	gr	fps	gr	fps	gr	fps	gr	fps	gr	fps	psi	Fill
Hodgdon Leverevolution	34.7	3,100	35.7	3,175	36.6	3,240	37.5	3,305	38.5	3,380	59,800	87%
Vihtavuori N550	36.6	3,095	37.6	3,165	38.7	3,240	39.7	3,310	40.7	3,380	59,900	101%
Accurate 4350	37.9	3,010	39.0	3,090	40.0	3,165	41.0	3,235	42.1	3,320	59,800	104%
Winchester StaBALL 6.5	37.8	3,025	38.8	3,095	39.9	3,170	41.0	3,250	42.0	3,320	59,900	100%
Hodgdon BL-C(2)	34.0	3,025	35.0	3,100	35.9	3,165	36.8	3,230	37.8	3,305	59,700	90%
Hodgdon H4350	36.8	3,005	37.8	3,080	38.8	3,150	39.9	3,230	40.9	3,305	59,700	98%
Ramshot Big Game	36.2	3,020	37.2	3,095	38.2	3,165	39.2	3,235	40.2	3,305	59,900	97%
Reload Swiss RS52	33.6	3,030	34.5	3,100	35.5	3,170	36.4	3,240	37.3	3,305	59,700	93%
Alliant Reloder 17	35.7	2,970	36.7	3,045	37.7	3,120	38.7	3,195	39.7	3,270	59,800	94%
Alliant Reloder 16	35.9	2,980	36.9	3,050	37.9	3,120	38.9	3,190	39.9	3,260	57,000	105%
Vihtavuori N150	33.1	2,985	34.0	3,050	35.0	3,125	35.9	3,190	36.8	3,255	59,900	98%
Hodgdon H4895	31.4	2,990	32.3	3,055	33.1	3,115	34.0	3,185	34.9	3,250	60,000	86%
Winchester StaBALL Match	33.3	2,980	34.2	3,045	35.1	3,110	36.1	3,185	37.0	3,250	59,800	98%
Hodgdon Varget	32.3	2,975	33.2	3,040	34.1	3,110	35.0	3,175	35.9	3,240	59,700	89%
Winchester 760	36.2	2,950	37.2	3,020	38.2	3,090	39.2	3,165	40.2	3,235	59,900	98%
Ramshot Hunter	37.4	2,935	38.5	3,010	39.5	3,080	40.5	3,150	41.6	3,230	58,400	105%
Hodgdon H414	35.6	2,910	36.6	2,980	37.6	3,050	38.6	3,125	39.6	3,195	59,800	96%
IMR 4166	31.5	2,935	32.4	3,000	33.3	3,070	34.1	3,130	35.0	3,195	59,900	92%
Hodgdon H4831SC	38.6	2,880	39.7	2,955	40.8	3,035	41.8	3,105	42.9	3,185	59,800	102%
IMR 4451	35.6	2,860	36.6	2,930	37.5	2,995	38.5	3,070	39.5	3,145	59,700	97%

85 gr Bullet · 25" barrel

COAL: 2.400" • Bullet length: 0.934" • Seat depth: 0.384" • Usable capacity: 42.8 / 47.1 gr H_2O

Powder	STEP 1 · 90%		STEP 2		STEP 3		STEP 4		STEP 5 · LIMIT			
	gr	fps	gr	fps	gr	fps	gr	fps	gr	fps	psi	Fill
Hodgdon Leverevolution	34.4	3,015	35.4	3,090	36.3	3,155	37.3	3,225	38.2	3,290	59,800	85%
Vihtavuori N550	36.0	3,005	37.0	3,070	38.0	3,135	39.0	3,205	40.0	3,275	59,800	98%
Accurate 4350	37.8	2,970	38.8	3,040	39.9	3,115	41.0	3,195	42.0	3,265	59,900	103%
Winchester StaBALL 6.5	37.6	2,965	38.6	3,030	39.7	3,105	40.8	3,180	41.8	3,250	59,900	98%
Alliant Reloder 16	36.3	2,965	37.3	3,030	38.3	3,100	39.3	3,170	40.3	3,240	60,000	104%
Hodgdon H4350	36.5	2,950	37.5	3,020	38.5	3,090	39.6	3,170	40.6	3,240	59,700	96%
Hodgdon SUPERFORMANCE	39.0	2,930	40.1	3,005	41.1	3,075	42.2	3,150	43.3	3,230	59,800	99%
Alliant Reloder 17	35.6	2,920	36.6	2,990	37.6	3,065	38.6	3,140	39.6	3,210	59,700	93%
Alliant Reloder 26	40.2	2,890	41.3	2,965	42.5	3,045	43.6	3,125	44.7	3,200	57,300	105%
Accurate 2700	36.1	2,910	37.1	2,980	38.1	3,050	39.1	3,120	40.1	3,190	59,800	95%
Alliant Reloder 15	32.6	2,920	33.5	2,985	34.4	3,045	35.3	3,110	36.2	3,175	59,900	90%
Winchester 760	36.0	2,890	37.0	2,960	38.0	3,030	39.0	3,100	40.0	3,170	59,700	96%
Alliant Power Pro 4000-MR	37.6	2,870	38.6	2,935	39.7	3,010	40.8	3,090	41.8	3,160	59,700	99%
Hodgdon Varget	32.0	2,895	32.9	2,960	33.8	3,025	34.7	3,090	35.6	3,155	59,700	86%
Norma MRP	38.8	2,860	39.9	2,935	41.0	3,010	42.0	3,080	43.1	3,155	59,700	105%
Reload Swiss RS50	33.8	2,890	34.8	2,960	35.7	3,020	36.6	3,085	37.6	3,155	59,700	92%
Hodgdon H4895	31.1	2,905	32.0	2,970	32.8	3,030	33.6	3,085	34.5	3,150	59,900	83%
IMR 4007 SSC	35.2	2,845	36.2	2,915	37.2	2,990	38.1	3,050	39.1	3,125	59,700	98%
IMR 4166	31.3	2,860	32.2	2,925	33.0	2,980	33.9	3,045	34.8	3,110	60,000	90%
IMR 4451	35.5	2,815	36.5	2,885	37.5	2,960	38.4	3,020	39.4	3,090	59,700	96%

90 gr Bullet · 25" barrel

COAL: 2.400" • Bullet length: 1.076" • Seat depth: 0.526" • Usable capacity: 41.4 / 47.1 gr H_2O

Powder	STEP 1 · 90%		STEP 2		STEP 3		STEP 4		STEP 5 · LIMIT			
	gr	fps	gr	fps	gr	fps	gr	fps	gr	fps	psi	Fill
Hodgdon Leverevolution	33.3	2,925	34.2	2,990	35.1	3,055	36.1	3,125	37.0	3,190	60,000	85%
Accurate 4350	36.5	2,880	37.5	2,950	38.5	3,020	39.6	3,095	40.6	3,170	59,700	103%
Vihtavuori N550	34.7	2,905	35.7	2,970	36.7	3,040	37.6	3,100	38.6	3,165	59,700	98%
Winchester StaBALL 6.5	36.5	2,880	37.5	2,950	38.5	3,015	39.5	3,085	40.5	3,155	60,000	99%
Hodgdon H4350	35.3	2,870	36.3	2,940	37.3	3,010	38.2	3,075	39.2	3,145	59,700	96%
Hodgdon SUPERFORMANCE	37.8	2,850	38.8	2,920	39.9	3,000	41.0	3,075	42.0	3,145	59,900	99%
Alliant Reloder 16	35.0	2,870	36.0	2,940	37.0	3,005	37.9	3,070	38.9	3,140	60,000	104%
Alliant Reloder 17	34.5	2,840	35.5	2,915	36.4	2,980	37.3	3,045	38.3	3,115	59,600	93%
Alliant Power Pro 2000-MR	33.7	2,850	34.6	2,915	35.5	2,975	36.5	3,045	37.4	3,110	59,700	95%
Accurate 2700	34.9	2,825	35.9	2,890	36.8	2,955	37.8	3,025	38.8	3,095	59,700	96%
Winchester 760	34.8	2,805	35.8	2,875	36.8	2,945	37.7	3,005	38.7	3,075	59,700	96%
Norma MRP	37.5	2,780	38.5	2,850	39.6	2,925	40.7	3,000	41.7	3,070	59,700	105%
Alliant Reloder 15	31.4	2,820	32.3	2,885	33.1	2,940	34.0	3,005	34.9	3,065	59,800	90%
Vihtavuori N540	31.6	2,825	32.5	2,885	33.4	2,945	34.2	3,000	35.1	3,065	60,000	90%
Hodgdon Varget	31.0	2,810	31.9	2,875	32.7	2,935	33.5	2,990	34.4	3,055	59,800	86%
Vihtavuori N160	36.0	2,785	37.0	2,850	38.0	2,920	39.0	2,985	40.0	3,055	58,500	105%
IMR 4007 SSC	34.1	2,770	35.0	2,830	36.0	2,905	37.0	2,975	37.9	3,040	59,900	98%
Hodgdon Hybrid 100V	34.0	2,750	35.0	2,825	35.9	2,890	36.8	2,955	37.8	3,030	59,700	103%
IMR 4451	34.4	2,745	35.4	2,815	36.3	2,875	37.3	2,945	38.2	3,010	60,000	96%
IMR 4166	30.2	2,760	31.1	2,825	31.9	2,885	32.8	2,950	33.6	3,005	59,900	90%

95 gr Bullet · 25" barrel

COAL: 2.400" • Bullet length: 1.146" • Seat depth: 0.596" • Usable capacity: 40.8 / 47.1 gr H_2O

Powder	STEP 1 · 90%		STEP 2		STEP 3		STEP 4		STEP 5 · LIMIT			
	gr	fps	gr	fps	gr	fps	gr	fps	gr	fps	psi	Fill
Accurate 4350	35.9	2,825	36.9	2,895	37.9	2,965	38.9	3,035	39.9	3,105	60,000	102%
Hodgdon Leverevolution	32.6	2,845	33.5	2,910	34.4	2,975	35.3	3,040	36.2	3,100	60,000	85%
Hodgdon SUPERFORMANCE	37.1	2,795	38.1	2,865	39.2	2,940	40.2	3,010	41.2	3,080	59,800	99%
Vihtavuori N550	33.9	2,825	34.9	2,895	35.8	2,955	36.8	3,020	37.7	3,080	60,000	97%
Winchester StaBALL 6.5	35.7	2,810	36.7	2,875	37.7	2,940	38.7	3,010	39.7	3,080	59,900	98%
Hodgdon H4350	34.6	2,810	35.5	2,870	36.5	2,940	37.5	3,010	38.4	3,075	60,000	95%
Alliant Reloder 26	38.3	2,770	39.4	2,845	40.5	2,920	41.5	2,990	42.6	3,065	57,700	105%
Alliant Reloder 16	34.2	2,800	35.2	2,865	36.1	2,925	37.0	2,990	38.0	3,055	60,000	103%
Ramshot Big Game	34.1	2,795	35.0	2,855	36.0	2,925	37.0	2,990	37.9	3,055	59,900	95%
Alliant Reloder 17	33.8	2,775	34.8	2,850	35.7	2,915	36.6	2,980	37.6	3,050	59,700	92%
IMR 4350	34.8	2,780	35.8	2,845	36.8	2,915	37.7	2,980	38.7	3,050	59,800	102%
Alliant Power Pro 2000-MR	33.0	2,780	33.9	2,840	34.9	2,910	35.8	2,975	36.7	3,035	60,000	95%
Winchester 760	34.2	2,745	35.2	2,815	36.1	2,875	37.0	2,940	38.0	3,010	59,900	96%
Hodgdon H4831SC	36.6	2,715	37.6	2,780	38.7	2,855	39.7	2,925	40.7	2,995	59,700	100%
IMR 7828SSC	37.0	2,705	38.0	2,770	39.0	2,840	40.1	2,915	41.1	2,985	58,100	105%
Alliant Reloder 15	30.6	2,740	31.5	2,800	32.3	2,855	33.1	2,910	34.0	2,975	59,600	89%
Winchester StaBALL Match	31.3	2,735	32.2	2,795	33.0	2,850	33.9	2,915	34.8	2,975	59,600	96%
Hodgdon Varget	30.2	2,725	31.1	2,790	31.9	2,850	32.8	2,915	33.6	2,970	59,800	86%
Hodgdon Hybrid 100V	33.4	2,695	34.3	2,760	35.3	2,835	36.2	2,900	37.1	2,965	59,700	102%
IMR 4451	33.7	2,685	34.6	2,745	35.5	2,810	36.5	2,880	37.4	2,940	59,800	95%

100 gr Bullet · 25" barrel

COAL: 2.400" • Bullet length: 1.052" • Seat depth: 0.502" • Usable capacity: 41.5 / 47.1 gr H_2O

Powder	STEP 1 · 90%		STEP 2		STEP 3		STEP 4		STEP 5 · LIMIT			
	gr	fps	gr	fps	gr	fps	gr	fps	gr	fps	psi	Fill
Alliant Reloder 26	38.8	2,765	39.9	2,840	41.0	2,910	42.0	2,980	43.1	3,055	59,800	104%
Accurate 4350	35.7	2,765	36.7	2,830	37.7	2,900	38.7	2,965	39.7	3,035	59,700	100%
Vihtavuori N555	36.5	2,770	37.5	2,835	38.5	2,905	39.5	2,970	40.5	3,035	59,800	105%
Hodgdon SUPERFORMANCE	37.0	2,750	38.0	2,815	39.0	2,885	40.1	2,955	41.1	3,025	59,800	97%
Hodgdon Leverevolution	32.3	2,760	33.2	2,820	34.1	2,885	35.0	2,950	35.9	3,010	60,000	83%
Winchester StaBALL 6.5	35.6	2,750	36.6	2,815	37.5	2,870	38.5	2,935	39.5	3,005	59,900	96%
Hodgdon H4350	34.3	2,740	35.3	2,810	36.2	2,870	37.1	2,930	38.1	3,000	60,000	93%
Alliant Reloder 17	33.8	2,725	34.8	2,795	35.7	2,860	36.6	2,920	37.6	2,990	59,900	91%
Alliant Reloder 22	36.9	2,695	37.9	2,765	39.0	2,840	40.0	2,905	41.0	2,975	59,400	105%
Reload Swiss RS62	35.9	2,700	36.9	2,770	37.9	2,835	38.9	2,905	39.9	2,975	59,900	100%
Alliant Reloder 16	33.8	2,720	34.8	2,785	35.7	2,845	36.6	2,905	37.6	2,970	59,900	101%
Vihtavuori N550	33.3	2,730	34.2	2,790	35.1	2,850	36.1	2,915	37.0	2,970	59,800	94%
Alliant Power Pro 4000-MR	35.7	2,680	36.7	2,745	37.7	2,815	38.7	2,880	39.7	2,945	59,900	97%
Hodgdon H4831SC	36.6	2,675	37.6	2,740	38.7	2,810	39.7	2,880	40.7	2,945	59,900	99%
Hodgdon H4831	36.5	2,645	37.5	2,710	38.5	2,775	39.5	2,845	40.5	2,910	59,200	105%
Hodgdon Hybrid 100V	33.4	2,650	34.3	2,715	35.3	2,785	36.2	2,845	37.1	2,910	59,800	100%
Winchester Supreme 780	38.8	2,620	39.9	2,695	41.0	2,765	42.0	2,830	43.1	2,905	59,900	105%
Hodgdon Varget	30.0	2,650	30.8	2,705	31.6	2,760	32.5	2,825	33.3	2,880	59,800	83%
IMR 4451	33.6	2,630	34.5	2,690	35.5	2,760	36.4	2,820	37.3	2,880	59,800	93%
IMR 4166	29.3	2,605	30.1	2,660	31.0	2,720	31.8	2,775	32.6	2,835	59,700	87%

105 gr Bullet · 25" barrel

COAL: 2.400" • Bullet length: 1.239" • Seat depth: 0.689" • Usable capacity: 39.7 / 47.1 gr H_2O

Powder	STEP 1 · 90%		STEP 2		STEP 3		STEP 4		STEP 5 · LIMIT			
	gr	fps	gr	fps	gr	fps	gr	fps	gr	fps	psi	Fill
Alliant Reloder 26	37.4	2,690	38.4	2,760	39.5	2,830	40.5	2,900	41.5	2,970	59,600	105%
Accurate 4350	34.5	2,695	35.5	2,760	36.4	2,820	37.3	2,885	38.3	2,950	59,900	101%
Hodgdon SUPERFORMANCE	35.6	2,670	36.6	2,735	37.6	2,800	38.6	2,870	39.6	2,940	59,600	98%
Vihtavuori N555	34.9	2,675	35.9	2,745	36.8	2,805	37.8	2,870	38.8	2,940	58,700	105%
Hodgdon Leverevolution	31.1	2,675	32.0	2,740	32.9	2,805	33.7	2,860	34.6	2,920	60,000	83%
Winchester StaBALL 6.5	34.3	2,665	35.3	2,730	36.2	2,790	37.1	2,850	38.1	2,920	59,800	97%
Hodgdon H4350	32.9	2,655	33.8	2,720	34.8	2,785	35.7	2,845	36.6	2,910	59,700	93%
Alliant Reloder 17	32.6	2,650	33.5	2,715	34.4	2,780	35.3	2,840	36.2	2,905	59,900	91%
Alliant Reloder 16	32.6	2,645	33.5	2,705	34.4	2,765	35.3	2,825	36.2	2,885	60,000	101%
IMR 7828SSC	35.9	2,620	36.9	2,685	37.9	2,750	38.9	2,820	39.9	2,885	60,000	105%
Ramshot Big Game	32.7	2,645	33.6	2,705	34.5	2,765	35.4	2,825	36.3	2,885	59,900	93%
Vihtavuori N550	32.1	2,650	33.0	2,710	33.9	2,770	34.8	2,830	35.7	2,885	59,900	94%
Hodgdon H380	31.9	2,610	32.8	2,675	33.6	2,725	34.5	2,785	35.4	2,850	59,900	95%
Vihtavuori N160	34.0	2,600	35.0	2,665	35.9	2,725	36.8	2,785	37.8	2,850	59,700	103%
IMR 7828	36.1	2,580	37.1	2,645	38.1	2,710	39.1	2,780	40.1	2,845	59,900	102%
Hodgdon Hybrid 100V	32.1	2,570	33.0	2,635	33.9	2,695	34.8	2,760	35.7	2,825	59,600	101%
Winchester Supreme 780	37.3	2,550	38.3	2,615	39.3	2,680	40.4	2,755	41.4	2,820	59,400	105%
IMR 4451	32.3	2,550	33.2	2,615	34.1	2,675	35.0	2,735	35.9	2,795	59,700	94%
Hodgdon Varget	28.8	2,565	29.6	2,620	30.4	2,680	31.2	2,735	32.0	2,790	59,600	84%
IMR 4166	28.3	2,530	29.1	2,585	29.9	2,640	30.6	2,690	31.4	2,745	59,700	88%

115 gr Bullet · 25" barrel

COAL: 2.400" • Bullet length: 1.342" • Seat depth: 0.792" • Usable capacity: 38.8 / 47.1 gr H_2O

Powder	STEP 1 · 90%		STEP 2		STEP 3		STEP 4		STEP 5 · LIMIT			
	gr	fps	gr	fps	gr	fps	gr	fps	gr	fps	psi	Fill
Alliant Reloder 26	36.2	2,595	37.2	2,660	38.2	2,725	39.2	2,790	40.2	2,860	59,900	104%
Vihtavuori N555	33.8	2,590	34.7	2,645	35.6	2,705	36.6	2,770	37.5	2,830	59,700	104%
Hodgdon SUPERFORMANCE	34.5	2,565	35.5	2,630	36.4	2,690	37.3	2,750	38.3	2,820	59,700	97%
Accurate 4350	33.2	2,570	34.1	2,630	35.0	2,690	36.0	2,755	36.9	2,815	59,700	99%
Alliant Reloder 23	33.8	2,550	34.7	2,610	35.6	2,665	36.6	2,735	37.5	2,790	57,300	105%
Alliant Reloder 22	34.5	2,535	35.5	2,600	36.4	2,660	37.3	2,720	38.3	2,785	59,900	105%
Hodgdon H4350	31.7	2,540	32.6	2,600	33.5	2,660	34.3	2,715	35.2	2,775	60,000	91%
Winchester StaBALL 6.5	33.0	2,540	33.9	2,595	34.9	2,660	35.8	2,720	36.7	2,775	59,700	95%
Alliant Reloder 17	31.4	2,530	32.3	2,595	33.1	2,650	34.0	2,710	34.9	2,770	59,600	90%
Alliant Reloder 19	33.9	2,515	34.9	2,585	35.8	2,645	36.8	2,710	37.7	2,770	59,800	103%
Norma 204	33.4	2,525	34.3	2,585	35.3	2,650	36.2	2,710	37.1	2,770	59,800	100%
Ramshot Hunter	33.3	2,525	34.2	2,585	35.1	2,645	36.1	2,710	37.0	2,770	60,000	101%
Norma MRP	34.2	2,505	35.2	2,570	36.1	2,625	37.0	2,685	38.0	2,750	59,800	102%
Hodgdon H4831SC	34.1	2,500	35.0	2,555	36.0	2,620	37.0	2,685	37.9	2,745	59,900	98%
Ramshot Big Game	31.4	2,510	32.3	2,570	33.1	2,625	34.0	2,680	34.9	2,740	59,700	92%
IMR 7828	34.7	2,480	35.7	2,545	36.7	2,610	37.6	2,665	38.6	2,735	59,900	100%
Hodgdon H4831	34.0	2,480	35.0	2,545	35.9	2,600	36.8	2,660	37.8	2,730	59,900	105%
Vihtavuori N550	30.6	2,505	31.5	2,560	32.3	2,615	33.1	2,665	34.0	2,725	59,800	92%
Hodgdon Hybrid 100V	31.1	2,470	32.0	2,530	32.9	2,595	33.7	2,650	34.6	2,710	59,900	100%
Hodgdon H414	31.1	2,455	32.0	2,515	32.9	2,575	33.7	2,630	34.6	2,690	59,700	91%

25 Creedmoor

The 25 Creedmoor is a necked-down version of the 6.5 Creedmoor that holds .257-inch bullets. Variants existed as wildcats for some years. Their growth was driven by the arrival of long low-drag .25-caliber bullets suited to fast-twist barrels. The Sporting Arms and Ammunition Manufacturers' Institute (SAAMI) then accepted the cartridge. Hornady announced a standardized version in 2025. The company described it as the first SAAMI-accepted .25-caliber cartridge designed specifically for modern high-ballistic-coefficient bullets.

Hornady's initial factory loads were a 128-grain ELD-X Precision Hunter load at about 2,850 fps and a 134-grain ELD Match load at about 2,800 fps. Both figures came from 24-inch test barrels. A 1:8-inch twist is used to stabilize these long bullets. The cartridge is intended to fill the gap between the 6mm and 6.5mm Creedmoor. It offers moderate recoil, a flat trajectory and good wind resistance for hunting, competition and other long-range shooting.

Cartridge specifications	
Bullet Diameter	**0.257" (6.53 mm)**
Max Case Length	**1.920" (48.77 mm)**
Case Trim Length	**1.910" (48.51 mm)**
Max COAL	**2.825" (71.75 mm)**
Primer Pocket	**Large Rifle**
Standard Twist	**1:8"**
Case Capacity	**52.5 gr H_2O**
Max Pressure	**62,000 psi (SAAMI)**

90 gr Bullet · 25" barrel

COAL: 2.425" • Bullet length: 0.890" • Seat depth: 0.385" • Usable capacity: 47.8 / 52.5 gr H_2O

Powder	STEP 1 · 90%		STEP 2		STEP 3		STEP 4		STEP 5 · LIMIT			
	gr	fps	gr	fps	gr	fps	gr	fps	gr	fps	psi	Fill
Vihtavuori N550	42.8	3,215	44.0	3,285	45.1	3,355	46.3	3,430	47.5	3,505	61,700	104%
Winchester StaBALL 6.5	44.7	3,185	46.0	3,265	47.2	3,340	48.5	3,425	49.7	3,505	61,800	105%
Hodgdon Leverevolution	40.2	3,200	41.3	3,270	42.5	3,350	43.6	3,420	44.7	3,495	62,000	89%
Ramshot Big Game	42.9	3,175	44.1	3,250	45.3	3,330	46.5	3,405	47.7	3,485	61,700	102%
Reload Swiss RS52	40.0	3,185	41.1	3,260	42.2	3,330	43.3	3,405	44.4	3,480	61,800	98%
Hodgdon BL-C(2)	40.4	3,180	41.5	3,250	42.6	3,320	43.8	3,400	44.9	3,475	61,800	94%
Hodgdon CFE 223	40.9	3,175	42.0	3,245	43.1	3,315	44.3	3,395	45.4	3,465	62,000	97%
Alliant Power Pro 2000-MR	41.6	3,160	42.8	3,240	43.9	3,310	45.1	3,385	46.2	3,460	61,900	102%
Winchester 748	39.8	3,170	40.9	3,240	42.0	3,315	43.1	3,385	44.2	3,460	61,900	95%
Alliant Reloder 15	39.3	3,155	40.4	3,220	41.5	3,295	42.6	3,365	43.7	3,435	61,900	98%
Hodgdon H380	41.9	3,130	43.1	3,210	44.3	3,285	45.4	3,355	46.6	3,435	61,600	104%
Vihtavuori N540	39.4	3,155	40.5	3,225	41.6	3,295	42.7	3,365	43.8	3,435	62,000	97%
Reload Swiss RS60	42.8	3,100	44.0	3,180	45.2	3,260	46.4	3,340	47.6	3,425	61,800	102%
Alliant TS 15.5	39.2	3,130	40.3	3,200	41.4	3,275	42.5	3,345	43.6	3,420	61,700	98%
Hodgdon H4350	42.9	3,105	44.1	3,185	45.3	3,260	46.5	3,340	47.7	3,420	61,900	101%
Accurate 2520	38.9	3,140	40.0	3,210	41.0	3,270	42.1	3,340	43.2	3,410	61,900	93%
Hodgdon Varget	38.5	3,125	39.6	3,200	40.6	3,265	41.7	3,335	42.8	3,410	61,900	93%
Winchester StaBALL Match	39.5	3,130	40.6	3,200	41.7	3,270	42.8	3,340	43.9	3,410	61,800	103%
IMR 4064	38.3	3,115	39.4	3,185	40.5	3,255	41.5	3,320	42.6	3,390	61,900	95%
Norma 202	37.4	3,085	38.5	3,155	39.5	3,220	40.5	3,280	41.6	3,355	61,700	94%

100 gr Bullet · 25" barrel

COAL: 2.525" • Bullet length: 1.151" • Seat depth: 0.546" • Usable capacity: 45.7 / 52.5 gr H_2O

Powder	STEP 1 · 90%		STEP 2		STEP 3		STEP 4		STEP 5 · LIMIT			
	gr	fps	gr	fps	gr	fps	gr	fps	gr	fps	psi	Fill
Winchester StaBALL 6.5	42.7	3,030	43.9	3,105	45.0	3,175	46.2	3,250	47.4	3,325	61,900	105%
Hodgdon SUPERFORMANCE	44.0	2,990	45.2	3,065	46.5	3,145	47.7	3,225	48.9	3,305	61,700	105%
Vihtavuori N550	40.4	3,025	41.5	3,095	42.6	3,160	43.8	3,235	44.9	3,305	61,800	103%
Ramshot Big Game	40.9	3,015	42.0	3,085	43.1	3,155	44.3	3,230	45.4	3,300	61,800	101%
Hodgdon Leverevolution	38.2	3,020	39.3	3,095	40.3	3,155	41.4	3,230	42.4	3,295	61,800	89%
Hodgdon BL-C(2)	38.5	3,010	39.6	3,080	40.6	3,145	41.7	3,215	42.8	3,290	62,000	94%
Reload Swiss RS52	38.0	3,010	39.0	3,075	40.1	3,145	41.2	3,220	42.2	3,285	61,600	97%
Alliant Power Pro 2000-MR	39.5	2,990	40.6	3,060	41.7	3,130	42.8	3,200	43.9	3,270	61,800	101%
Hodgdon CFE 223	38.8	2,995	39.9	3,065	41.0	3,135	42.0	3,200	43.1	3,270	62,000	96%
Reload Swiss RS60	40.9	2,965	42.0	3,040	43.1	3,110	44.3	3,190	45.4	3,265	61,900	102%
Hodgdon H4350	40.7	2,960	41.8	3,030	43.0	3,105	44.1	3,175	45.2	3,245	61,800	100%
Alliant Reloder 15	37.2	2,975	38.2	3,035	39.3	3,105	40.3	3,170	41.3	3,235	61,900	96%
Vihtavuori N150	37.3	2,955	38.3	3,020	39.3	3,085	40.4	3,155	41.4	3,220	61,900	102%
Vihtavuori N540	37.2	2,965	38.2	3,025	39.3	3,095	40.3	3,155	41.3	3,220	61,800	96%
Hodgdon Varget	36.5	2,950	37.5	3,015	38.5	3,080	39.5	3,145	40.5	3,210	61,700	92%
IMR 4955	42.8	2,900	44.0	2,980	45.1	3,050	46.3	3,130	47.5	3,210	61,700	105%
Vihtavuori N140	36.9	2,945	37.9	3,005	39.0	3,075	40.0	3,140	41.0	3,205	61,800	91%
IMR 4007 SSC	40.1	2,915	41.2	2,985	42.3	3,055	43.4	3,125	44.5	3,200	61,900	104%
Shooters World The Creed	37.4	2,935	38.4	2,995	39.5	3,065	40.5	3,130	41.5	3,195	61,800	94%
IMR 4064	36.2	2,935	37.2	3,000	38.2	3,060	39.2	3,125	40.2	3,190	61,800	94%

110 gr Bullet · 25" barrel

COAL: 2.665" • Bullet length: 1.245" • Seat depth: 0.500" • Usable capacity: 46.3 / 52.5 gr H_2O

Powder	STEP 1 · 90%		STEP 2		STEP 3		STEP 4		STEP 5 · LIMIT			
	gr	fps	gr	fps	gr	fps	gr	fps	gr	fps	psi	Fill
Hodgdon SUPERFORMANCE	43.6	2,910	44.8	2,985	46.0	3,055	47.2	3,130	48.4	3,205	61,700	102%
Winchester StaBALL 6.5	42.0	2,915	43.2	2,985	44.4	3,055	45.5	3,125	46.7	3,195	61,800	102%
Ramshot Big Game	40.2	2,890	41.3	2,960	42.5	3,030	43.6	3,100	44.7	3,165	61,900	98%
Reload Swiss RS60	40.4	2,875	41.5	2,945	42.6	3,015	43.8	3,090	44.9	3,160	61,900	100%
Accurate 2700	40.5	2,870	41.6	2,940	42.8	3,010	43.9	3,080	45.0	3,150	61,600	99%
Hodgdon BL-C(2)	38.0	2,890	39.0	2,950	40.1	3,020	41.2	3,090	42.2	3,150	62,000	91%
Reload Swiss RS52	37.4	2,885	38.5	2,955	39.5	3,015	40.5	3,080	41.6	3,150	61,900	94%
Winchester 760	40.6	2,865	41.7	2,930	42.9	3,005	44.0	3,075	45.1	3,140	61,800	100%
Vihtavuori N550	39.2	2,875	40.3	2,940	41.4	3,005	42.4	3,065	43.5	3,130	61,700	99%
Alliant Power Pro 4000-MR	42.1	2,835	43.3	2,910	44.5	2,980	45.6	3,050	46.8	3,125	61,800	103%
Hodgdon H414	40.2	2,845	41.3	2,915	42.5	2,985	43.6	3,055	44.7	3,125	61,900	98%
Norma 204	41.6	2,840	42.8	2,915	43.9	2,980	45.1	3,055	46.2	3,125	60,400	105%
Hodgdon H4350	39.9	2,850	41.0	2,920	42.1	2,985	43.2	3,055	44.3	3,120	61,700	97%
Hodgdon H380	39.2	2,850	40.3	2,920	41.4	2,985	42.4	3,045	43.5	3,115	61,800	100%
Hodgdon H4831SC	43.1	2,820	44.3	2,890	45.5	2,965	46.7	3,035	47.9	3,110	61,800	104%
Alliant Reloder 16	39.4	2,840	40.5	2,905	41.6	2,970	42.7	3,040	43.8	3,105	58,900	105%
Winchester StaBALL Match	37.0	2,825	38.0	2,885	39.0	2,945	40.1	3,015	41.1	3,075	61,900	100%
Reload Swiss RS50	37.7	2,810	38.8	2,875	39.8	2,935	40.9	3,005	41.9	3,065	61,700	95%
Hodgdon Hybrid 100V	39.0	2,780	40.1	2,850	41.1	2,915	42.2	2,985	43.3	3,055	58,600	105%
IMR 4064	35.4	2,800	36.4	2,860	37.3	2,915	38.3	2,980	39.3	3,040	61,800	91%

117 gr Bullet · 25" barrel

COAL: 2.565" • Bullet length: 1.179" • Seat depth: 0.534" • Usable capacity: 45.8 / 52.5 gr H_2O

Powder	STEP 1 · 90%		STEP 2		STEP 3		STEP 4		STEP 5 · LIMIT			
	gr	fps	gr	fps	gr	fps	gr	fps	gr	fps	psi	Fill
Hodgdon SUPERFORMANCE	42.8	2,840	44.0	2,910	45.1	2,980	46.3	3,050	47.5	3,125	61,700	101%
Winchester StaBALL 6.5	41.2	2,830	42.4	2,900	43.5	2,965	44.6	3,030	45.8	3,105	61,900	101%
Norma URP	39.4	2,800	40.5	2,870	41.6	2,940	42.7	3,010	43.8	3,075	61,100	105%
Reload Swiss RS60	39.6	2,800	40.7	2,870	41.8	2,935	42.9	3,005	44.0	3,075	61,700	99%
Reload Swiss RS62	41.6	2,790	42.8	2,865	43.9	2,930	45.1	3,005	46.2	3,075	61,500	105%
Ramshot Big Game	39.3	2,800	40.4	2,865	41.5	2,930	42.6	2,995	43.7	3,065	61,700	97%
Reload Swiss RS70	42.8	2,780	44.0	2,855	45.1	2,920	46.3	2,990	47.5	3,065	61,800	105%
Accurate 2700	39.8	2,795	40.9	2,860	42.0	2,925	43.1	2,995	44.2	3,060	62,000	98%
Norma 204	41.1	2,785	42.3	2,855	43.4	2,920	44.6	2,995	45.7	3,060	61,700	105%
Hodgdon BL-C(2)	37.2	2,795	38.2	2,860	39.3	2,925	40.3	2,985	41.3	3,050	61,800	90%
Winchester 760	39.8	2,785	40.9	2,850	42.0	2,915	43.1	2,985	44.2	3,050	61,800	99%
Alliant Power Pro 2000-MR	38.1	2,785	39.1	2,845	40.2	2,910	41.3	2,980	42.3	3,040	62,000	97%
Alliant Reloder 16	39.0	2,785	40.1	2,850	41.1	2,905	42.2	2,970	43.3	3,040	60,900	105%
Hodgdon H4831SC	42.3	2,750	43.5	2,820	44.6	2,890	45.8	2,960	47.0	3,035	61,700	103%
Hodgdon H4350	39.0	2,770	40.1	2,835	41.1	2,895	42.2	2,965	43.3	3,030	61,800	95%
Hodgdon H380	38.3	2,760	39.3	2,820	40.4	2,885	41.5	2,950	42.5	3,010	61,800	98%
IMR 7828	43.0	2,720	44.2	2,790	45.4	2,860	46.6	2,930	47.8	3,005	60,500	105%
Hodgdon Hybrid 100V	38.5	2,725	39.6	2,790	40.6	2,855	41.7	2,925	42.8	2,990	59,600	105%
Winchester StaBALL Match	36.2	2,730	37.2	2,790	38.2	2,850	39.2	2,910	40.2	2,970	61,900	98%
Alliant Reloder 15	35.3	2,730	36.3	2,790	37.3	2,850	38.2	2,905	39.2	2,965	61,900	91%

134 gr Bullet · 25" barrel

COAL: 2.800" • Bullet length: 1.475" • Seat depth: 0.595" • Usable capacity: 45.1 / 52.5 gr H_2O

Powder	STEP 1 · 90%		STEP 2		STEP 3		STEP 4		STEP 5 · LIMIT			
	gr	fps	gr	fps	gr	fps	gr	fps	gr	fps	psi	Fill
Accurate 4350	40.8	2,740	41.9	2,805	43.0	2,865	44.2	2,940	45.3	3,005	61,100	105%
Hodgdon SUPERFORMANCE	41.1	2,675	42.3	2,745	43.4	2,810	44.6	2,880	45.7	2,940	61,900	99%
Alliant Reloder 26	42.4	2,660	43.6	2,730	44.8	2,795	45.9	2,860	47.1	2,930	58,800	105%
Vihtavuori N555	39.7	2,670	40.8	2,730	41.9	2,795	43.0	2,860	44.1	2,920	60,700	105%
Reload Swiss RS62	40.1	2,645	41.2	2,710	42.3	2,770	43.4	2,835	44.5	2,905	61,800	103%
Norma URP	37.8	2,645	38.8	2,705	39.9	2,770	41.0	2,840	42.0	2,900	61,600	102%
Ramshot Hunter	40.0	2,640	41.1	2,705	42.2	2,765	43.3	2,830	44.4	2,895	62,000	105%
Reload Swiss RS70	41.1	2,630	42.3	2,695	43.4	2,760	44.6	2,830	45.7	2,895	61,900	102%
Winchester StaBALL 6.5	39.3	2,635	40.4	2,695	41.5	2,755	42.6	2,820	43.7	2,880	61,600	98%
IMR 4955	40.1	2,615	41.2	2,680	42.3	2,745	43.4	2,810	44.5	2,875	61,900	99%
IMR 7828SSC	41.0	2,605	42.1	2,665	43.3	2,735	44.4	2,795	45.5	2,860	60,400	105%
Accurate 2700	38.1	2,605	39.1	2,665	40.2	2,730	41.3	2,790	42.3	2,850	61,800	96%
Alliant Power Pro 4000-MR	39.7	2,600	40.8	2,660	41.9	2,725	43.0	2,790	44.1	2,850	61,700	100%
Hodgdon Hybrid 100V	37.6	2,595	38.6	2,655	39.7	2,720	40.8	2,790	41.8	2,850	61,900	104%
Winchester 760	38.1	2,605	39.1	2,660	40.2	2,725	41.3	2,790	42.3	2,845	61,900	96%
Winchester Supreme 780	42.3	2,560	43.5	2,625	44.6	2,690	45.8	2,755	47.0	2,825	59,100	105%
Alliant Reloder 16	37.1	2,590	38.1	2,645	39.2	2,710	40.2	2,765	41.2	2,820	61,600	101%
Hodgdon H4350	37.0	2,580	38.0	2,640	39.0	2,695	40.1	2,760	41.1	2,820	61,700	92%
Vihtavuori N160	39.0	2,575	40.1	2,635	41.1	2,690	42.2	2,755	43.3	2,815	61,900	104%
Shooters World SW4350	39.1	2,535	40.2	2,595	41.3	2,655	42.3	2,715	43.4	2,775	61,700	104%

.25 WSSM

Winchester and Browning introduced the .25 Winchester Super Short Magnum (WSSM) in 2004. It was the third member of the Super Short Magnum family after the .223 and .243 WSSM of 2003. It uses the same short and wide case derived from the Winchester Short Magnum (WSM). The neck is sized for .257-inch bullets. The goal was to approach .25-06 Remington performance from a compact short-action rifle.

Winchester factory loads included an 85-grain Ballistic Silvertip at 3,470 fps, a 110-grain AccuBond at 3,100 fps, a 115-grain Ballistic Silvertip at 3,060 fps and a 120-grain Positive Expanding Point at 2,990 fps. All were measured in 24-inch test barrels. Most rifles had 22-inch barrels. The cartridge suits varmints and deer-size game. It was also well regarded as a youth cartridge. Production of WSSM rifles ended about two years after its introduction following a patent dispute. Ammunition has since been made only intermittently. Handloading is the most dependable way to keep a .25 WSSM rifle supplied.

Cartridge specifications	
Bullet Diameter	**0.257" (6.53 mm)**
Max Case Length	**1.670" (42.42 mm)**
Case Trim Length	**1.660" (42.17 mm)**
Max COAL	**2.360" (59.94 mm)**
Primer Pocket	**Large Rifle**
Standard Twist	**1:10"**
Case Capacity	**52.9 gr H_2O**
Max Pressure	**65,000 psi (SAAMI)**

75 gr Bullet · 25" barrel

COAL: 2.177" • Bullet length: 0.764" • Seat depth: 0.257" • Usable capacity: 49.7 / 52.9 gr H_2O

Powder	STEP 1 · 90%		STEP 2		STEP 3		STEP 4		STEP 5 · LIMIT			
	gr	fps	gr	fps	gr	fps	gr	fps	gr	fps	psi	Fill
Hodgdon Leverevolution	44.0	3,505	45.2	3,585	46.5	3,675	47.7	3,755	48.9	3,835	64,900	94%
Vihtavuori N540	42.9	3,445	44.1	3,520	45.3	3,600	46.5	3,675	47.7	3,755	64,700	102%
IMR 4895	42.0	3,435	43.2	3,515	44.4	3,595	45.5	3,665	46.7	3,750	64,900	97%
Reload Swiss RS52	42.8	3,425	44.0	3,505	45.2	3,585	46.4	3,665	47.6	3,750	64,600	101%
Accurate 2520	42.2	3,425	43.4	3,505	44.5	3,575	45.7	3,655	46.9	3,735	64,900	97%
Winchester 748	42.8	3,415	44.0	3,495	45.1	3,570	46.3	3,650	47.5	3,735	64,900	98%
Hodgdon BL-C(2)	43.1	3,405	44.3	3,490	45.5	3,570	46.7	3,650	47.9	3,730	64,800	97%
Hodgdon H4895	40.6	3,415	41.7	3,490	42.9	3,570	44.0	3,640	45.1	3,715	64,700	94%
Ramshot Big Game	45.5	3,375	46.8	3,460	48.0	3,535	49.3	3,620	50.6	3,710	64,800	104%
Vihtavuori N140	42.4	3,400	43.6	3,480	44.8	3,560	45.9	3,630	47.1	3,710	65,000	97%
IMR 4064	41.9	3,395	43.1	3,475	44.3	3,550	45.4	3,625	46.6	3,705	64,600	100%
Alliant Reloder 15	42.1	3,380	43.3	3,455	44.5	3,535	45.6	3,605	46.8	3,690	64,900	101%
Hodgdon Varget	41.4	3,365	42.5	3,435	43.7	3,520	44.9	3,600	46.0	3,675	64,700	96%
IMR 4320	41.9	3,355	43.1	3,440	44.3	3,520	45.4	3,595	46.6	3,675	64,700	94%
IMR 8208 XBR	39.9	3,370	41.0	3,440	42.1	3,515	43.2	3,590	44.3	3,660	65,000	97%
Alliant AR-Comp	38.9	3,370	40.0	3,445	41.0	3,510	42.1	3,580	43.2	3,655	65,000	93%
Alliant Power Pro Varmint	40.6	3,350	41.7	3,420	42.9	3,500	44.0	3,575	45.1	3,650	64,800	96%
Winchester StaBALL Match	41.9	3,345	43.0	3,420	44.2	3,500	45.4	3,575	46.5	3,650	62,500	105%
IMR 3031	38.9	3,345	40.0	3,420	41.0	3,490	42.1	3,565	43.2	3,640	64,700	93%
Vihtavuori N133	37.5	3,310	38.5	3,375	39.6	3,445	40.7	3,520	41.7	3,590	64,900	96%

100 gr Bullet · 25" barrel

COAL: 2.270" • Bullet length: 0.993" • Seat depth: 0.393" • Usable capacity: 48.0 / 52.9 gr H_2O

Powder	STEP 1 · 90%		STEP 2		STEP 3		STEP 4		STEP 5 · LIMIT			
	gr	fps	gr	fps	gr	fps	gr	fps	gr	fps	psi	Fill
Accurate 2700	44.0	3,075	45.2	3,150	46.5	3,230	47.7	3,305	48.9	3,380	64,800	104%
Hodgdon SUPERFORMANCE	46.4	3,055	47.7	3,135	49.0	3,215	50.2	3,290	51.5	3,370	63,700	105%
Winchester StaBALL 6.5	44.6	3,060	45.9	3,140	47.1	3,210	48.4	3,290	49.6	3,365	65,000	104%
Hodgdon H4350	43.6	3,055	44.8	3,130	46.0	3,205	47.2	3,280	48.4	3,355	64,800	102%
Hodgdon Leverevolution	40.4	3,075	41.5	3,145	42.6	3,210	43.8	3,285	44.9	3,355	64,800	89%
Reload Swiss RS52	39.7	3,035	40.8	3,105	41.9	3,170	43.0	3,240	44.1	3,310	65,000	96%
Vihtavuori N550	41.9	3,035	43.0	3,100	44.2	3,170	45.4	3,240	46.5	3,305	65,000	102%
Hodgdon H380	41.9	3,010	43.1	3,085	44.3	3,155	45.4	3,225	46.6	3,300	64,900	103%
Ramshot Big Game	42.1	3,005	43.3	3,075	44.5	3,150	45.6	3,215	46.8	3,290	64,800	99%
Winchester 760	42.8	2,990	44.0	3,060	45.2	3,135	46.4	3,205	47.6	3,280	64,700	102%
Alliant Power Pro 4000-MR	44.5	2,960	45.7	3,035	47.0	3,110	48.2	3,185	49.4	3,260	64,900	105%
IMR 4895	38.0	2,985	39.0	3,045	40.1	3,115	41.2	3,180	42.2	3,245	64,800	91%
IMR 4007 SSC	41.9	2,945	43.0	3,015	44.2	3,085	45.4	3,160	46.5	3,230	65,000	104%
IMR 4064	38.1	2,975	39.1	3,035	40.2	3,100	41.3	3,170	42.3	3,230	64,700	94%
Hodgdon Varget	37.9	2,960	39.0	3,030	40.0	3,090	41.0	3,150	42.1	3,220	64,800	91%
IMR 4350	42.2	2,935	43.4	3,005	44.5	3,075	45.7	3,145	46.9	3,220	64,000	105%
Vihtavuori N140	38.3	2,950	39.4	3,015	40.5	3,085	41.5	3,145	42.6	3,210	64,600	90%
Alliant Reloder 15	38.0	2,945	39.0	3,005	40.1	3,070	41.2	3,135	42.2	3,200	64,700	94%
Ramshot TAC	37.1	2,945	38.1	3,005	39.2	3,075	40.2	3,135	41.2	3,200	65,000	91%
Accurate 2520	38.0	2,940	39.0	3,000	40.1	3,065	41.2	3,135	42.2	3,195	64,800	90%

117 gr Bullet · 25" barrel

COAL: 2.300" • Bullet length: 1.170" • Seat depth: 0.540" • Usable capacity: 46.1 / 52.9 gr H_2O

Powder	STEP 1 · 90%		STEP 2		STEP 3		STEP 4		STEP 5 · LIMIT			
	gr	fps	gr	fps	gr	fps	gr	fps	gr	fps	psi	Fill
Hodgdon SUPERFORMANCE	44.1	2,870	45.3	2,940	46.5	3,015	47.8	3,090	49.0	3,165	64,800	104%
Accurate 2700	41.5	2,850	42.6	2,915	43.8	2,985	45.0	3,055	46.1	3,125	64,600	102%
Winchester StaBALL 6.5	42.0	2,830	43.2	2,900	44.4	2,970	45.5	3,035	46.7	3,105	64,800	102%
Accurate 4350	41.7	2,825	42.9	2,895	44.0	2,960	45.1	3,025	46.3	3,100	63,100	105%
Hodgdon H4350	40.8	2,835	41.9	2,900	43.0	2,965	44.2	3,035	45.3	3,100	64,800	99%
Reload Swiss RS60	40.3	2,800	41.4	2,865	42.5	2,930	43.7	3,005	44.8	3,075	65,000	100%
Hodgdon Leverevolution	37.8	2,815	38.8	2,875	39.9	2,940	41.0	3,010	42.0	3,070	64,800	87%
Hodgdon H414	40.4	2,780	41.5	2,845	42.6	2,910	43.8	2,985	44.9	3,050	64,900	99%
Winchester 760	40.4	2,775	41.5	2,840	42.6	2,905	43.8	2,975	44.9	3,040	65,000	100%
Norma 204	41.5	2,760	42.6	2,825	43.8	2,895	45.0	2,970	46.1	3,035	63,400	105%
Hodgdon BL-C(2)	37.6	2,775	38.6	2,835	39.7	2,900	40.8	2,965	41.8	3,025	64,700	91%
Ramshot Big Game	39.5	2,765	40.6	2,830	41.7	2,895	42.8	2,960	43.9	3,025	64,600	97%
Vihtavuori N550	38.7	2,765	39.8	2,825	40.9	2,890	41.9	2,945	43.0	3,010	64,800	98%
Alliant Reloder 16	39.2	2,750	40.3	2,815	41.4	2,875	42.5	2,940	43.6	3,005	62,400	105%
IMR 4007 SSC	39.4	2,730	40.5	2,800	41.6	2,865	42.7	2,930	43.8	2,995	64,800	102%
IMR 4350	39.7	2,730	40.8	2,795	41.9	2,860	43.0	2,925	44.1	2,990	64,700	103%
IMR 4451	39.8	2,720	40.9	2,785	42.0	2,850	43.1	2,915	44.2	2,980	64,600	100%
IMR 4831	40.6	2,695	41.7	2,760	42.9	2,835	44.0	2,900	45.1	2,970	64,300	105%
IMR 4064	35.5	2,720	36.5	2,775	37.5	2,835	38.4	2,890	39.4	2,950	64,900	91%
IMR 7828	42.9	2,670	44.1	2,740	45.3	2,810	46.5	2,880	47.7	2,950	64,700	104%

.25-06 Remington

The .25-06 Remington is based on the .30-06 Springfield case necked down to accept .257-inch bullets. Charles Newton experimented with the concept as early as 1912. A. O. Niedner introduced his .25 Niedner wildcat in 1920. Similar versions followed. Among them was the .25 Whelen. The cartridge remained a wildcat for nearly half a century. Then in 1969 Remington standardized it as a commercial cartridge. The company retained the parent case dimensions apart from the neck.

Modern factory loads use bullets from 100 to 120 grains at muzzle velocities of roughly 2,990 to 3,230 fps. Handloaders also use lighter varmint bullets. Its flat trajectory and moderate recoil have made it a common choice for deer and pronghorn in open country. It is also a common choice for long-range varmint shooting. Most makers of bolt-action and single-shot rifles offer the chambering. Factory ammunition is produced by Remington, Winchester, Federal and most other major manufacturers.

Cartridge specifications	
Bullet Diameter	**0.257" (6.53 mm)**
Max Case Length	**2.494" (63.35 mm)**
Case Trim Length	**2.484" (63.09 mm)**
Max COAL	**3.250" (82.55 mm)**
Primer Pocket	**Large Rifle**
Standard Twist	**1:10"**
Case Capacity	**65.0 gr H_2O**
Max Pressure	**63,000 psi (SAAMI)**

75 gr Bullet · 25" barrel

COAL: 3.001" • Bullet length: 0.764" • Seat depth: 0.257" • Usable capacity: 61.8 / 65.0 gr H_2O

Powder	STEP 1 · 90%		STEP 2		STEP 3		STEP 4		STEP 5 · LIMIT			
	gr	fps	gr	fps	gr	fps	gr	fps	gr	fps	psi	Fill
Hodgdon Leverevolution	47.3	3,465	48.6	3,540	50.0	3,625	51.3	3,700	52.6	3,780	62,800	81%
Accurate 4350	52.3	3,405	53.8	3,490	55.2	3,570	56.6	3,655	58.1	3,745	62,900	98%
Alliant Reloder 17	50.5	3,410	51.9	3,490	53.3	3,575	54.7	3,660	56.1	3,745	62,900	91%
Alliant Reloder 23	53.7	3,390	55.2	3,475	56.7	3,560	58.2	3,645	59.7	3,735	62,900	105%
Alliant Reloder 26	56.8	3,365	58.4	3,455	60.0	3,545	61.5	3,630	63.1	3,725	62,800	103%
Hodgdon BL-C(2)	47.0	3,415	48.3	3,490	49.6	3,570	50.9	3,645	52.2	3,725	62,700	85%
Reload Swiss RS52	46.4	3,420	47.7	3,495	49.0	3,575	50.3	3,650	51.6	3,725	62,900	88%
IMR 4350	51.8	3,380	53.3	3,470	54.7	3,550	56.1	3,630	57.6	3,720	62,900	100%
Alliant Reloder 16	50.4	3,400	51.8	3,475	53.2	3,555	54.6	3,635	56.0	3,715	62,800	101%
Hodgdon H4350	51.1	3,375	52.5	3,460	54.0	3,545	55.4	3,630	56.8	3,710	63,000	93%
Ramshot Hunter	52.6	3,370	54.0	3,450	55.5	3,535	57.0	3,620	58.4	3,700	63,000	100%
Vihtavuori N550	48.8	3,405	50.1	3,475	51.5	3,550	52.9	3,630	54.2	3,700	62,900	92%
Alliant Reloder 22	54.9	3,310	56.4	3,400	58.0	3,490	59.5	3,580	61.0	3,670	62,700	105%
Reload Swiss RS62	52.6	3,310	54.0	3,390	55.5	3,480	57.0	3,570	58.4	3,655	63,000	98%
IMR 4320	45.4	3,345	46.6	3,420	47.9	3,495	49.1	3,570	50.4	3,645	62,800	82%
Vihtavuori N160	52.3	3,315	53.8	3,395	55.2	3,475	56.6	3,555	58.1	3,640	62,800	102%
Reload Swiss RS70	54.2	3,280	55.7	3,365	57.2	3,450	58.7	3,540	60.2	3,625	62,800	98%
Hodgdon Varget	44.3	3,320	45.5	3,390	46.8	3,470	48.0	3,540	49.2	3,610	62,800	83%
Hodgdon H414	48.7	3,265	50.1	3,340	51.4	3,415	52.8	3,495	54.1	3,570	62,900	89%
Winchester 760	48.8	3,265	50.1	3,335	51.5	3,415	52.9	3,495	54.2	3,570	62,800	90%

87 gr Bullet · 25" barrel

COAL: 3.050" • Bullet length: 0.915" • Seat depth: 0.359" • Usable capacity: 60.6 / 65.0 gr H_2O

Powder	STEP 1 · 90%		STEP 2		STEP 3		STEP 4		STEP 5 · LIMIT			
	gr	fps	gr	fps	gr	fps	gr	fps	gr	fps	psi	Fill
Alliant Reloder 26	54.9	3,230	56.4	3,315	58.0	3,400	59.5	3,485	61.0	3,570	62,800	101%
Alliant Reloder 17	48.7	3,245	50.1	3,325	51.4	3,400	52.8	3,480	54.1	3,555	62,700	89%
Vihtavuori N560	54.8	3,235	56.3	3,315	57.8	3,390	59.4	3,475	60.9	3,555	62,700	105%
Accurate 4350	50.3	3,240	51.7	3,315	53.1	3,395	54.5	3,475	55.9	3,550	62,700	96%
Alliant Reloder 23	51.8	3,230	53.3	3,315	54.7	3,390	56.1	3,465	57.6	3,550	63,000	103%
IMR 4955	52.2	3,205	53.7	3,290	55.1	3,370	56.5	3,450	58.0	3,535	63,000	96%
Alliant Reloder 19	52.6	3,200	54.0	3,280	55.5	3,365	57.0	3,450	58.4	3,530	63,000	102%
Alliant Reloder 22	53.1	3,195	54.6	3,280	56.0	3,360	57.5	3,445	59.0	3,530	62,900	103%
IMR 4350	49.7	3,220	51.1	3,300	52.5	3,375	53.8	3,445	55.2	3,525	62,800	98%
Hodgdon H4350	48.9	3,215	50.3	3,290	51.6	3,365	52.9	3,435	54.3	3,515	62,900	90%
Vihtavuori N555	50.9	3,195	52.3	3,270	53.8	3,355	55.2	3,435	56.6	3,510	62,900	100%
Alliant Reloder 16	48.2	3,210	49.5	3,280	50.9	3,355	52.2	3,430	53.5	3,500	63,000	98%
IMR 7828SSC	53.5	3,160	55.0	3,240	56.5	3,325	57.9	3,400	59.4	3,485	63,000	102%
Accurate 2700	48.2	3,180	49.6	3,260	50.9	3,330	52.3	3,410	53.6	3,480	63,000	90%
Hodgdon SUPERFORMANCE	50.8	3,155	52.2	3,235	53.6	3,310	55.0	3,390	56.4	3,465	63,000	91%
Vihtavuori N160	50.2	3,150	51.6	3,225	53.0	3,300	54.4	3,380	55.8	3,455	63,000	100%
Reload Swiss RS76	56.8	3,115	58.4	3,195	60.0	3,280	61.5	3,360	63.1	3,445	61,300	105%
IMR 4451	48.4	3,130	49.8	3,210	51.1	3,280	52.4	3,355	53.8	3,435	62,700	92%
Winchester Supreme 780	54.6	3,055	56.1	3,135	57.7	3,225	59.2	3,305	60.7	3,390	62,800	101%
Winchester 760	47.0	3,095	48.3	3,170	49.6	3,240	50.9	3,310	52.2	3,380	62,900	88%

100 gr Bullet · 25" barrel

COAL: 3.095" • Bullet length: 0.995" • Seat depth: 0.394" • Usable capacity: 60.1 / 65.0 gr H_2O

Powder	STEP 1 · 90%		STEP 2		STEP 3		STEP 4		STEP 5 · LIMIT			
	gr	fps	gr	fps	gr	fps	gr	fps	gr	fps	psi	Fill
Alliant Reloder 26	53.2	3,090	54.7	3,170	56.2	3,250	57.6	3,325	59.1	3,405	62,800	99%
Alliant Reloder 17	47.2	3,080	48.5	3,150	49.8	3,225	51.1	3,295	52.4	3,370	62,800	87%
Alliant Reloder 19	50.9	3,060	52.3	3,135	53.8	3,215	55.2	3,290	56.6	3,370	62,800	100%
Alliant Reloder 22	51.4	3,060	52.8	3,135	54.3	3,215	55.7	3,290	57.1	3,365	62,900	101%
IMR 4955	50.6	3,065	52.0	3,140	53.4	3,215	54.8	3,290	56.2	3,365	62,800	94%
Accurate 4350	48.6	3,075	50.0	3,145	51.3	3,215	52.6	3,285	54.0	3,360	62,900	94%
Alliant Reloder 23	50.0	3,065	51.4	3,135	52.8	3,210	54.2	3,285	55.6	3,360	62,700	100%
IMR 4831	49.4	3,045	50.8	3,120	52.1	3,190	53.5	3,270	54.9	3,345	62,800	98%
Vihtavuori N560	52.3	3,055	53.8	3,130	55.2	3,200	56.6	3,270	58.1	3,345	62,800	101%
IMR 4350	47.7	3,040	49.0	3,110	50.4	3,185	51.7	3,255	53.0	3,325	62,900	95%
IMR 7828SSC	51.5	3,015	52.9	3,090	54.4	3,170	55.8	3,245	57.2	3,320	62,900	99%
Ramshot Hunter	49.0	3,035	50.4	3,110	51.7	3,175	53.0	3,245	54.4	3,320	62,800	96%
Norma MRP	50.5	3,000	51.9	3,070	53.3	3,145	54.7	3,220	56.1	3,290	62,700	97%
Ramshot Magnum	55.8	2,960	57.3	3,035	58.9	3,115	60.5	3,200	62.0	3,280	62,900	103%
Vihtavuori N170	54.5	2,980	56.0	3,050	57.5	3,120	59.1	3,195	60.6	3,270	62,800	105%
Ramshot Big Game	45.7	3,000	47.0	3,065	48.3	3,135	49.5	3,200	50.8	3,265	62,800	86%
Winchester Supreme 780	53.0	2,955	54.5	3,030	56.0	3,110	57.4	3,185	58.9	3,265	62,900	99%
IMR 4451	46.9	2,980	48.2	3,050	49.5	3,120	50.8	3,185	52.1	3,255	63,000	90%
Vihtavuori N570	55.2	2,930	56.7	3,010	58.3	3,095	59.8	3,175	61.3	3,255	59,600	105%
Vihtavuori N165	51.1	2,960	52.5	3,030	54.0	3,105	55.4	3,180	56.8	3,250	62,700	101%

110 gr Bullet · 25" barrel

COAL: 3.135" • Bullet length: 1.195" • Seat depth: 0.554" • Usable capacity: 58.0 / 65.0 gr H_2O

Powder	STEP 1 · 90%		STEP 2		STEP 3		STEP 4		STEP 5 · LIMIT			
	gr	fps	gr	fps	gr	fps	gr	fps	gr	fps	psi	Fill
Alliant Reloder 26	50.9	2,960	52.3	3,030	53.8	3,110	55.2	3,185	56.6	3,255	62,800	98%
Alliant Reloder 19	48.9	2,935	50.3	3,010	51.6	3,080	52.9	3,150	54.3	3,225	62,900	99%
Ramshot Grand	53.7	2,910	55.2	2,990	56.7	3,065	58.2	3,145	59.7	3,225	62,900	105%
Alliant Reloder 22	49.2	2,930	50.6	3,000	52.0	3,075	53.3	3,145	54.7	3,220	63,000	100%
IMR 4955	48.5	2,930	49.9	3,005	51.2	3,075	52.5	3,145	53.9	3,220	63,000	94%
Alliant Reloder 17	45.2	2,935	46.5	3,005	47.7	3,070	49.0	3,145	50.2	3,210	62,900	87%
Alliant Reloder 23	47.9	2,925	49.2	2,990	50.5	3,060	51.9	3,130	53.2	3,200	62,800	100%
IMR 4831	47.3	2,910	48.6	2,980	50.0	3,055	51.3	3,125	52.6	3,195	62,700	97%
Vihtavuori N565	52.1	2,895	53.5	2,965	55.0	3,040	56.5	3,120	57.9	3,190	62,500	105%
Hodgdon H4831SC	48.8	2,895	50.1	2,960	51.5	3,035	52.9	3,105	54.2	3,175	62,900	94%
Reload Swiss RS76	53.5	2,880	55.0	2,955	56.5	3,030	57.9	3,100	59.4	3,175	63,000	103%
Vihtavuori N560	49.7	2,905	51.1	2,975	52.5	3,040	53.8	3,105	55.2	3,175	62,900	99%
IMR 4350	45.5	2,895	46.8	2,960	48.0	3,025	49.3	3,095	50.5	3,155	63,000	93%
Vihtavuori N555	46.0	2,890	47.3	2,955	48.5	3,015	49.8	3,085	51.1	3,155	62,900	95%
IMR 7828	49.5	2,860	50.9	2,930	52.3	3,000	53.6	3,070	55.0	3,145	62,900	95%
Norma MRP	48.3	2,865	49.6	2,930	51.0	3,000	52.4	3,075	53.7	3,140	62,900	96%
Vihtavuori N170	51.9	2,830	53.4	2,900	54.8	2,965	56.3	3,040	57.7	3,105	62,800	103%
IMR 4451	44.8	2,835	46.0	2,895	47.3	2,965	48.5	3,030	49.8	3,100	62,900	89%
Alliant Reloder 16	43.7	2,850	44.9	2,910	46.1	2,970	47.3	3,035	48.5	3,095	62,800	93%
Vihtavuori N165	48.8	2,825	50.1	2,890	51.5	2,960	52.9	3,030	54.2	3,095	63,000	100%

117 gr Bullet · 25" barrel

COAL: 3.100" • Bullet length: 1.160" • Seat depth: 0.554" • Usable capacity: 58.0 / 65.0 gr H_2O

Powder	STEP 1 · 90%		STEP 2		STEP 3		STEP 4		STEP 5 · LIMIT			
	gr	fps	gr	fps	gr	fps	gr	fps	gr	fps	psi	Fill
Alliant Reloder 26	50.3	2,900	51.7	2,970	53.1	3,040	54.5	3,115	55.9	3,185	62,800	97%
Alliant Reloder 19	48.3	2,875	49.6	2,945	51.0	3,015	52.4	3,090	53.7	3,160	62,900	98%
Ramshot Grand	53.2	2,860	54.7	2,935	56.2	3,010	57.6	3,080	59.1	3,160	62,700	104%
Vihtavuori N570	53.3	2,860	54.8	2,935	56.3	3,010	57.7	3,080	59.2	3,160	62,900	105%
Alliant Reloder 22	48.6	2,870	50.0	2,940	51.3	3,005	52.6	3,075	54.0	3,145	62,900	99%
IMR 4955	47.9	2,870	49.2	2,935	50.5	3,000	51.9	3,075	53.2	3,145	62,700	92%
Vihtavuori N565	51.4	2,850	52.8	2,915	54.3	2,990	55.7	3,060	57.1	3,135	63,000	103%
Alliant Reloder 17	44.6	2,865	45.9	2,930	47.1	2,995	48.4	3,065	49.6	3,130	62,900	86%
IMR 4831	46.9	2,855	48.2	2,925	49.5	2,990	50.8	3,060	52.1	3,130	62,900	96%
Accurate 4350	45.7	2,850	47.0	2,915	48.3	2,980	49.5	3,045	50.8	3,110	62,700	91%
Reload Swiss RS76	52.8	2,815	54.3	2,890	55.8	2,960	57.2	3,030	58.7	3,105	62,700	102%
Vihtavuori N560	48.7	2,825	50.1	2,890	51.4	2,955	52.8	3,020	54.1	3,085	62,800	97%
IMR 7828	48.8	2,800	50.1	2,865	51.5	2,935	52.9	3,005	54.2	3,075	62,900	94%
Winchester Supreme 780	50.1	2,785	51.5	2,855	52.9	2,925	54.3	3,000	55.7	3,070	62,800	97%
Hodgdon H4831	47.8	2,795	49.1	2,860	50.5	2,930	51.8	2,995	53.1	3,065	62,900	98%
IMR 4350	44.6	2,810	45.9	2,875	47.1	2,940	48.4	3,005	49.6	3,065	62,800	92%
Winchester StaBALL HD	52.9	2,755	54.4	2,830	55.8	2,895	57.3	2,970	58.8	3,045	62,700	103%
Vihtavuori N170	51.1	2,760	52.5	2,825	54.0	2,895	55.4	2,960	56.8	3,025	62,900	102%
Vihtavuori N568	52.4	2,725	53.9	2,800	55.3	2,875	56.8	2,955	58.2	3,025	63,000	104%
Vihtavuori N165	48.0	2,755	49.3	2,820	50.6	2,880	52.0	2,950	53.3	3,015	62,900	99%

.25-20 Winchester

Winchester introduced the .25-20 Winchester around 1895 for its Model 1892 lever-action rifle. It is also known as the .25-20 WCF. It was created by necking down the .32-20 Winchester case to accept .257-inch bullets. Marlin had offered a similar cartridge a few years earlier. Marlin rifles were also chambered for the .25-20. The cartridge was originally loaded with black powder and later with smokeless powder.

The .25-20 fires light bullets at modest velocities. Typical weights run from 60 to 86 grains. Its mild report, low recoil and economical operation made it popular with farmers, ranchers and trappers. They used it for small game, varmints and furbearers. Because of its limited power it is now rarely used on larger game. Factory ammunition is still produced in small quantities. Handloaders keep older Winchester and Marlin rifles in use. Many of them shoot cast lead bullets. The cartridge also sees occasional use in metallic silhouette competition.

Cartridge specifications	
Bullet Diameter	**0.257" (6.53 mm)**
Max Case Length	**1.330" (33.78 mm)**
Case Trim Length	**1.320" (33.53 mm)**
Max COAL	**1.592" (40.44 mm)**
Primer Pocket	**Small Rifle**
Standard Twist	**1:14"**
Case Capacity	**19.3 gr H_2O**
Max Pressure	**2,700 bar / 39,160 psi (C.I.P.)**

60 gr Bullet · 25" barrel

COAL: 1.578" • Bullet length: 0.505" • Seat depth: 0.257" • Usable capacity: 15.9 / 19.3 gr H_2O

Powder	STEP 1 · 90%		STEP 2		STEP 3		STEP 4		STEP 5 · LIMIT			
	gr	fps	gr	fps	gr	fps	gr	fps	gr	fps	psi	Fill
Norma R123	11.6	2,585	11.9	2,640	12.3	2,715	12.6	2,765	12.9	2,820	38,600	88%
Shooters World SBR-SOCOM	14.4	2,515	14.8	2,580	15.2	2,640	15.6	2,705	16.0	2,770	39,100	103%
Alliant Power Pro 300-MP	13.3	2,505	13.7	2,570	14.1	2,635	14.4	2,685	14.8	2,750	38,600	103%
Hodgdon Lil'Gun	13.4	2,510	13.8	2,575	14.2	2,640	14.5	2,690	14.9	2,750	37,900	105%
Accurate No. 11FS	13.0	2,505	13.3	2,555	13.7	2,620	14.1	2,690	14.4	2,740	38,800	91%
Accurate 4100	11.8	2,430	12.1	2,480	12.4	2,530	12.8	2,600	13.1	2,650	39,000	86%
Shooters World Blackout	14.5	2,380	14.9	2,440	15.3	2,500	15.7	2,560	16.1	2,620	38,800	103%
Reload Swiss RS30	12.2	2,325	12.5	2,375	12.9	2,440	13.3	2,505	13.6	2,555	38,900	104%

.250 Savage

Charles Newton designed the .250 Savage. Savage Arms introduced it in 1915 for the Model 99 lever-action rifle under the name .250-3000 Savage. The rimless case was derived from the .30-06 Springfield and shortened to fit the Model 99 action. The rifle's rotary magazine allowed the use of pointed bullets. The original load drove an 87-grain bullet at 3,000 fps. It was the first American commercial cartridge to reach that velocity.

The .250 Savage became known for moderate recoil and good accuracy. Hunters widely used it on deer, pronghorn and varmints. Its case is the parent of the .22-250 Remington and the .250 Ackley Improved. The cartridge later lost ground to the .257 Roberts and to 6mm cartridges such as the .243 Winchester. Few new rifles are chambered for it today. Ammunition and components remain available for handloaders.

Cartridge specifications	
Bullet Diameter	**0.257" (6.53 mm)**
Max Case Length	**1.912" (48.56 mm)**
Case Trim Length	**1.902" (48.31 mm)**
Max COAL	**2.515" (63.88 mm)**
Primer Pocket	**Large Rifle**
Standard Twist	**1:14"**
Case Capacity	**45.7 gr H_2O**
Max Pressure	**3,650 bar / 52,939 psi (C.I.P.)**

75 gr Bullet · 25" barrel

COAL: 2.419" • Bullet length: 0.764" • Seat depth: 0.257" • Usable capacity: 43.6 / 46.9 gr H_2O

Powder	STEP 1 · 90%		STEP 2		STEP 3		STEP 4		STEP 5 · LIMIT			
	gr	fps	gr	fps	gr	fps	gr	fps	gr	fps	psi	Fill
Hodgdon Leverevolution	36.8	3,130	37.8	3,200	38.8	3,270	39.9	3,350	40.9	3,420	52,700	90%
Vihtavuori N540	36.5	3,130	37.5	3,195	38.5	3,265	39.5	3,335	40.5	3,405	52,900	99%
Vihtavuori N550	39.2	3,100	40.3	3,170	41.4	3,245	42.5	3,320	43.6	3,395	51,500	105%
Hodgdon Varget	35.6	3,070	36.6	3,140	37.5	3,205	38.5	3,280	39.5	3,350	52,900	94%
Alliant Reloder 15	35.9	3,060	36.9	3,130	37.9	3,200	38.9	3,270	39.9	3,340	52,700	98%
Hodgdon H4895	33.9	3,060	34.9	3,135	35.8	3,200	36.8	3,270	37.7	3,335	52,700	89%
IMR 8208 XBR	33.8	3,060	34.8	3,130	35.7	3,195	36.6	3,260	37.6	3,330	52,800	93%
Winchester 748	35.6	3,030	36.6	3,105	37.5	3,165	38.5	3,240	39.5	3,310	52,700	93%
Hodgdon CFE 223	36.3	3,025	37.3	3,095	38.3	3,165	39.3	3,235	40.3	3,305	52,700	94%
Vihtavuori N150	35.8	3,025	36.8	3,095	37.8	3,165	38.8	3,235	39.8	3,305	52,700	102%
Alliant Power Pro 2000-MR	37.3	3,005	38.3	3,075	39.3	3,145	40.4	3,225	41.4	3,295	52,800	100%
Ramshot TAC	33.6	3,025	34.5	3,090	35.5	3,165	36.4	3,230	37.3	3,295	52,700	91%
Hodgdon H380	37.9	2,980	39.0	3,060	40.0	3,130	41.0	3,200	42.1	3,275	52,700	102%
Reload Swiss RS50	36.2	2,995	37.2	3,065	38.2	3,135	39.2	3,205	40.2	3,275	52,900	97%
Accurate 4064	35.1	2,975	36.1	3,045	37.0	3,110	38.0	3,180	39.0	3,255	52,800	99%
Shooters World The Creed	35.4	2,960	36.4	3,030	37.3	3,095	38.3	3,165	39.3	3,235	52,800	94%
Vihtavuori N133	31.2	2,975	32.1	3,040	33.0	3,105	33.8	3,165	34.7	3,230	52,800	91%
Hodgdon Benchmark	32.0	2,975	32.9	3,040	33.8	3,105	34.6	3,160	35.5	3,225	52,800	90%
Hodgdon H335	32.7	2,950	33.6	3,015	34.5	3,080	35.4	3,145	36.3	3,210	52,800	82%
IMR 4320	34.3	2,930	35.3	3,005	36.2	3,070	37.1	3,135	38.1	3,205	52,900	88%

90 gr Bullet · 25" barrel

COAL: 2.435" • Bullet length: 0.890" • Seat depth: 0.367" • Usable capacity: 42.4 / 46.9 gr H_2O

Powder	STEP 1 · 90%		STEP 2		STEP 3		STEP 4		STEP 5 · LIMIT			
	gr	fps	gr	fps	gr	fps	gr	fps	gr	fps	psi	Fill
Vihtavuori N550	37.1	2,895	38.1	2,960	39.2	3,030	40.2	3,095	41.2	3,160	52,800	102%
Hodgdon H4350	37.8	2,815	38.8	2,880	39.9	2,955	41.0	3,030	42.0	3,100	52,600	100%
Hodgdon Varget	33.5	2,840	34.4	2,905	35.4	2,975	36.3	3,035	37.2	3,100	52,800	91%
Vihtavuori N540	33.8	2,845	34.8	2,910	35.7	2,970	36.6	3,030	37.6	3,095	52,800	94%
Reload Swiss RS52	33.8	2,820	34.8	2,890	35.7	2,950	36.6	3,015	37.6	3,085	52,800	93%
Ramshot Big Game	36.5	2,815	37.5	2,880	38.5	2,945	39.5	3,015	40.5	3,080	52,800	97%
Winchester 748	33.7	2,815	34.6	2,875	35.5	2,940	36.5	3,005	37.4	3,070	52,800	91%
Alliant Reloder 15	33.5	2,820	34.4	2,880	35.4	2,945	36.3	3,005	37.2	3,065	52,700	94%
Hodgdon H380	35.9	2,795	36.9	2,860	37.9	2,925	38.9	2,995	39.9	3,060	52,800	100%
Hodgdon H4895	31.9	2,815	32.8	2,880	33.6	2,935	34.5	2,995	35.4	3,060	52,700	86%
Winchester StaBALL 6.5	37.6	2,780	38.6	2,845	39.7	2,915	40.8	2,985	41.8	3,055	52,700	99%
IMR 8208 XBR	31.6	2,805	32.5	2,865	33.4	2,925	34.2	2,980	35.1	3,045	52,800	90%
Winchester StaBALL Match	33.6	2,790	34.5	2,850	35.5	2,920	36.4	2,980	37.3	3,040	52,800	99%
IMR 4350	37.4	2,750	38.4	2,815	39.5	2,890	40.5	2,960	41.5	3,025	52,600	105%
Reload Swiss RS50	34.2	2,770	35.2	2,835	36.1	2,895	37.0	2,955	38.0	3,025	52,600	94%
Hodgdon SUPERFORMANCE	39.3	2,720	40.4	2,790	41.5	2,865	42.6	2,940	43.7	3,015	52,700	101%
Accurate 4064	33.0	2,755	33.9	2,820	34.9	2,885	35.8	2,950	36.7	3,010	52,800	96%
Hodgdon H414	36.5	2,745	37.5	2,810	38.5	2,875	39.5	2,940	40.5	3,010	52,700	97%
IMR 4320	32.5	2,725	33.4	2,785	34.3	2,850	35.2	2,915	36.1	2,975	52,700	86%
Alliant Power Pro 4000-MR	38.0	2,695	39.0	2,760	40.1	2,830	41.2	2,905	42.2	2,970	52,900	101%

100 gr Bullet · 25" barrel

COAL: 2.455" • Bullet length: 0.993" • Seat depth: 0.450" • Usable capacity: 41.3 / 46.9 gr H_2O

Powder	STEP 1 · 90%		STEP 2		STEP 3		STEP 4		STEP 5 · LIMIT			
	gr	fps	gr	fps	gr	fps	gr	fps	gr	fps	psi	Fill
Vihtavuori N550	35.2	2,735	36.2	2,800	37.2	2,860	38.1	2,915	39.1	2,980	52,700	100%
Hodgdon H4350	36.3	2,705	37.3	2,770	38.3	2,835	39.3	2,905	40.3	2,970	52,800	98%
Hodgdon Varget	32.0	2,690	32.9	2,755	33.8	2,815	34.7	2,875	35.6	2,935	52,800	90%
Ramshot Big Game	35.0	2,680	36.0	2,740	37.0	2,805	37.9	2,865	38.9	2,930	52,800	96%
Reload Swiss RS52	32.5	2,685	33.4	2,745	34.3	2,805	35.2	2,865	36.1	2,925	52,700	92%
Alliant Reloder 16	35.1	2,670	36.1	2,730	37.0	2,790	38.0	2,855	39.0	2,920	51,500	105%
Alliant Power Pro 2000-MR	33.9	2,665	34.9	2,730	35.8	2,790	36.8	2,855	37.7	2,915	52,800	96%
Hodgdon H380	34.5	2,665	35.5	2,730	36.4	2,790	37.3	2,850	38.3	2,915	52,900	99%
Hodgdon SUPERFORMANCE	38.0	2,630	39.0	2,695	40.1	2,770	41.2	2,840	42.2	2,905	52,900	100%
Alliant Reloder 15	31.9	2,665	32.8	2,725	33.6	2,775	34.5	2,835	35.4	2,895	52,700	92%
Hodgdon CFE 223	32.9	2,655	33.8	2,715	34.7	2,775	35.6	2,835	36.5	2,890	52,700	90%
Hodgdon H414	35.1	2,625	36.1	2,690	37.0	2,745	38.0	2,815	39.0	2,880	52,900	96%
Winchester 760	35.0	2,615	36.0	2,680	37.0	2,745	37.9	2,805	38.9	2,870	52,900	97%
IMR 4166	30.9	2,635	31.8	2,700	32.6	2,750	33.4	2,805	34.3	2,865	52,800	92%
Reload Swiss RS50	32.9	2,630	33.8	2,690	34.7	2,750	35.6	2,805	36.5	2,865	52,700	93%
IMR 4451	35.3	2,590	36.3	2,655	37.3	2,725	38.2	2,785	39.2	2,850	52,700	99%
Alliant Power Pro 4000-MR	36.5	2,580	37.5	2,645	38.5	2,705	39.6	2,780	40.6	2,845	52,600	100%
Alliant Reloder 17	34.0	2,585	35.0	2,650	35.9	2,715	36.8	2,775	37.8	2,845	52,900	92%
IMR 4320	31.2	2,585	32.1	2,650	33.0	2,710	33.8	2,765	34.7	2,825	52,800	85%
Hodgdon H4831SC	37.5	2,545	38.5	2,610	39.6	2,680	40.7	2,750	41.7	2,815	52,700	102%

110 gr Bullet · 25" barrel

COAL: 2.425" • Bullet length: 1.192" • Seat depth: 0.679" • Usable capacity: 38.6 / 46.9 gr H_2O

Powder	STEP 1 · 90%		STEP 2		STEP 3		STEP 4		STEP 5 · LIMIT			
	gr	fps	gr	fps	gr	fps	gr	fps	gr	fps	psi	Fill
Hodgdon Leverevolution	31.2	2,565	32.1	2,630	33.0	2,690	33.8	2,745	34.7	2,805	52,600	86%
Hodgdon H4350	33.9	2,550	34.9	2,615	35.8	2,675	36.8	2,740	37.7	2,800	52,900	99%
Vihtavuori N550	32.9	2,565	33.8	2,620	34.7	2,680	35.6	2,735	36.5	2,795	52,800	99%
Ramshot Big Game	32.9	2,520	33.8	2,580	34.7	2,635	35.6	2,695	36.5	2,755	52,800	96%
Alliant Reloder 16	32.9	2,515	33.8	2,570	34.7	2,630	35.6	2,690	36.5	2,745	51,800	105%
Hodgdon SUPERFORMANCE	35.6	2,485	36.6	2,550	37.6	2,615	38.6	2,680	39.6	2,745	52,800	100%
Hodgdon Varget	29.9	2,520	30.7	2,575	31.6	2,635	32.4	2,690	33.2	2,745	52,600	89%
Reload Swiss RS52	30.4	2,510	31.3	2,575	32.1	2,625	32.9	2,680	33.8	2,745	52,600	92%
Winchester StaBALL 6.5	34.0	2,500	35.0	2,565	35.9	2,625	36.8	2,680	37.8	2,745	52,900	99%
Hodgdon H380	32.2	2,495	33.1	2,555	34.0	2,615	34.9	2,675	35.8	2,735	52,800	99%
Hodgdon CFE 223	30.8	2,485	31.7	2,545	32.5	2,600	33.4	2,655	34.2	2,710	52,800	90%
Vihtavuori N540	29.9	2,495	30.7	2,545	31.6	2,605	32.4	2,655	33.2	2,710	52,600	91%
Alliant Reloder 15	29.7	2,485	30.5	2,540	31.4	2,600	32.2	2,655	33.0	2,705	52,800	91%
Hodgdon H414	32.9	2,470	33.8	2,530	34.7	2,585	35.6	2,645	36.5	2,705	52,600	96%
Norma 204	34.1	2,450	35.0	2,505	36.0	2,575	37.0	2,640	37.9	2,700	52,600	103%
Winchester 760	32.8	2,460	33.7	2,515	34.6	2,575	35.5	2,635	36.4	2,695	52,600	97%
Reload Swiss RS50	30.8	2,460	31.7	2,520	32.5	2,570	33.4	2,630	34.2	2,685	52,700	93%
Alliant Reloder 17	31.9	2,435	32.8	2,500	33.6	2,555	34.5	2,615	35.4	2,675	52,800	92%
Vihtavuori N160	33.6	2,415	34.5	2,470	35.5	2,535	36.4	2,590	37.3	2,650	50,100	105%
Norma MRP	35.0	2,395	36.0	2,460	37.0	2,525	37.9	2,585	38.9	2,645	51,100	105%

117 gr Bullet · 25" barrel

COAL: 2.475" • Bullet length: 1.145" • Seat depth: 0.582" • Usable capacity: 39.8 / 46.9 gr H_2O

Powder	STEP 1 · 90%		STEP 2		STEP 3		STEP 4		STEP 5 · LIMIT			
	gr	fps	gr	fps	gr	fps	gr	fps	gr	fps	psi	Fill
Hodgdon H4350	33.9	2,515	34.9	2,575	35.8	2,635	36.8	2,700	37.7	2,755	52,700	95%
Hodgdon Leverevolution	31.3	2,515	32.2	2,575	33.0	2,630	33.9	2,690	34.8	2,750	52,900	84%
Alliant Reloder 26	37.4	2,465	38.5	2,535	39.5	2,595	40.5	2,655	41.6	2,725	51,600	105%
Hodgdon SUPERFORMANCE	35.9	2,475	36.9	2,535	37.9	2,600	38.9	2,660	39.9	2,725	52,700	98%
Vihtavuori N550	32.5	2,495	33.4	2,550	34.3	2,605	35.2	2,660	36.1	2,715	52,800	95%
Alliant Reloder 16	33.0	2,480	33.9	2,535	34.9	2,595	35.8	2,655	36.7	2,710	52,800	102%
Ramshot Big Game	32.9	2,475	33.8	2,530	34.8	2,595	35.7	2,650	36.6	2,705	52,700	94%
Winchester StaBALL 6.5	34.2	2,470	35.2	2,535	36.1	2,590	37.0	2,645	38.0	2,705	52,900	96%
Hodgdon Varget	30.0	2,475	30.8	2,525	31.6	2,580	32.5	2,640	33.3	2,690	52,900	87%
Alliant Power Pro 2000-MR	31.9	2,465	32.8	2,520	33.6	2,570	34.5	2,630	35.4	2,685	52,600	93%
Hodgdon H380	32.3	2,455	33.2	2,515	34.1	2,570	35.0	2,625	35.9	2,685	52,800	96%
Hodgdon H414	33.1	2,440	34.0	2,500	35.0	2,560	35.9	2,620	36.8	2,675	52,900	94%
Reload Swiss RS70	35.8	2,415	36.8	2,475	37.8	2,540	38.8	2,600	39.8	2,665	52,800	101%
Winchester 760	33.0	2,430	33.9	2,490	34.9	2,550	35.8	2,605	36.7	2,665	52,900	95%
Alliant Reloder 17	32.1	2,415	33.0	2,475	33.9	2,535	34.8	2,590	35.7	2,650	52,800	90%
Winchester StaBALL Match	30.3	2,425	31.2	2,485	32.0	2,535	32.9	2,595	33.7	2,645	52,900	95%
Alliant Reloder 22	35.4	2,390	36.4	2,455	37.3	2,510	38.3	2,575	39.3	2,640	50,600	105%
Alliant Reloder 15	29.5	2,425	30.3	2,475	31.1	2,525	32.0	2,585	32.8	2,635	52,700	88%
Reload Swiss RS50	30.9	2,415	31.8	2,470	32.6	2,520	33.4	2,570	34.3	2,630	52,600	91%
IMR 4320	29.4	2,385	30.2	2,440	31.1	2,500	31.9	2,550	32.7	2,605	52,900	83%

.256 Winchester Magnum

Winchester introduced the .256 Winchester Magnum in 1960. It was formed by necking down the .357 Magnum revolver case to accept .257-inch bullets. The result was a small rimmed bottleneck cartridge intended for small game and varmints. Winchester itself did not build a rifle for the round. The first firearm chambered for it was the Ruger Hawkeye single-shot pistol.

Other firearms chambered for the .256 included the Marlin Model 62 Levermatic lever-action rifle, a Universal Firearms M1 carbine variant and the Thompson/Center Contender single-shot pistol. The factory load used a 60-grain bullet at about 2,760 fps from a 24-inch rifle barrel. None of these firearms remained in production for long. The cartridge is now considered obsolete. It has only limited availability through custom sources. Handloaders can form cases from .357 Magnum brass. This keeps the cartridge usable in surviving rifles and pistols.

Cartridge specifications	
Bullet Diameter	**0.257" (6.53 mm)**
Max Case Length	**1.281" (32.54 mm)**
Case Trim Length	**1.271" (32.29 mm)**
Max COAL	**1.590" (40.39 mm)**
Primer Pocket	**Small Rifle**
Standard Twist	**1:14"**
Case Capacity	**21.1 gr H_2O**
Max Pressure	**3,500 bar / 50,763 psi (C.I.P.)**

60 gr Bullet · 25" barrel

COAL: 1.529" • Bullet length: 0.505" • Seat depth: 0.257" • Usable capacity: 17.7 / 21.1 gr H_2O

Powder	STEP 1 · 90%		STEP 2		STEP 3		STEP 4		STEP 5 · LIMIT			
	gr	fps	gr	fps	gr	fps	gr	fps	gr	fps	psi	Fill
Norma R123	12.9	2,665	13.3	2,730	13.6	2,780	14.0	2,845	14.3	2,890	50,100	87%
Shooters World SBR-SOCOM	15.9	2,605	16.4	2,675	16.8	2,735	17.3	2,805	17.7	2,860	50,400	103%
Alliant Power Pro 300-MP	14.9	2,615	15.3	2,675	15.7	2,735	16.1	2,795	16.5	2,850	50,700	103%
Hodgdon Lil'Gun	14.9	2,600	15.3	2,660	15.8	2,730	16.2	2,790	16.6	2,850	50,100	105%
Accurate No. 11FS	14.4	2,595	14.8	2,655	15.2	2,715	15.6	2,775	16.0	2,835	50,600	91%
Accurate No. 9	12.7	2,520	13.0	2,570	13.4	2,640	13.8	2,710	14.1	2,760	50,200	82%
Hodgdon H110	13.7	2,510	14.1	2,570	14.4	2,615	14.8	2,675	15.2	2,735	50,200	88%
Shooters World Blackout	16.1	2,480	16.6	2,545	17.0	2,600	17.4	2,655	17.9	2,720	50,700	103%
Accurate 4100	13.1	2,495	13.4	2,545	13.8	2,605	14.2	2,665	14.5	2,710	50,400	86%
Vihtavuori N110	12.7	2,485	13.0	2,535	13.4	2,600	13.8	2,660	14.1	2,705	50,100	93%
Alliant 2400	12.7	2,465	13.0	2,510	13.4	2,575	13.8	2,635	14.1	2,680	50,700	88%
Reload Swiss RS30	13.6	2,415	14.0	2,475	14.3	2,520	14.7	2,575	15.1	2,635	50,600	104%
IMR 4227	14.5	2,400	14.9	2,460	15.3	2,515	15.7	2,570	16.1	2,630	50,200	103%
Hodgdon H4227	13.3	2,370	13.7	2,430	14.1	2,490	14.4	2,535	14.8	2,590	50,700	96%
Accurate LT-30	16.7	2,265	17.1	2,320	17.6	2,385	18.1	2,450	18.5	2,505	48,100	105%

75 gr Bullet · 25" barrel

COAL: 1.590" • Bullet length: 0.769" • Seat depth: 0.460" • Usable capacity: 15.2 / 21.1 gr H_2O

Powder	STEP 1 · 90%		STEP 2		STEP 3		STEP 4		STEP 5 · LIMIT			
	gr	fps	gr	fps	gr	fps	gr	fps	gr	fps	psi	Fill
Shooters World SBR-SOCOM	13.7	2,215	14.1	2,270	14.4	2,315	14.8	2,375	15.2	2,430	50,200	103%
Norma R123	11.0	2,220	11.3	2,270	11.6	2,320	11.9	2,370	12.2	2,420	50,100	87%
Alliant Power Pro 300-MP	12.8	2,205	13.2	2,265	13.5	2,310	13.8	2,355	14.2	2,415	50,700	104%
Hodgdon Lil'Gun	12.8	2,195	13.2	2,255	13.5	2,300	13.8	2,345	14.2	2,405	50,600	105%
Accurate No. 11FS	12.3	2,180	12.7	2,245	13.0	2,290	13.3	2,335	13.7	2,395	50,400	91%
Accurate No. 9	10.9	2,135	11.2	2,190	11.5	2,245	11.8	2,295	12.1	2,345	50,500	82%
Shooters World Blackout	13.9	2,095	14.3	2,150	14.7	2,205	15.0	2,250	15.4	2,305	50,700	103%
Vihtavuori N110	10.8	2,060	11.1	2,110	11.4	2,160	11.7	2,205	12.0	2,255	50,000	93%
Accurate 4100	11.2	2,065	11.5	2,115	11.8	2,160	12.1	2,205	12.4	2,250	50,400	86%
Alliant 2400	10.8	2,035	11.1	2,085	11.4	2,130	11.7	2,180	12.0	2,225	50,200	87%
IMR 4227	12.3	1,995	12.7	2,055	13.0	2,100	13.3	2,145	13.7	2,200	50,200	102%
Reload Swiss RS30	11.6	2,005	11.9	2,050	12.3	2,110	12.6	2,155	12.9	2,200	50,500	103%
Hodgdon H4227	11.3	1,960	11.6	2,005	11.9	2,055	12.3	2,115	12.6	2,160	50,200	95%

87 gr Bullet · 25" barrel

COAL: 1.590" • Bullet length: 0.876" • Seat depth: 0.567" • Usable capacity: 14.5 / 21.1 gr H_2O

Powder	STEP 1 · 90%		STEP 2		STEP 3		STEP 4		STEP 5 · LIMIT			
	gr	fps	gr	fps	gr	fps	gr	fps	gr	fps	psi	Fill
Shooters World SBR-SOCOM	12.8	2,030	13.2	2,090	13.5	2,130	13.8	2,175	14.2	2,230	49,900	101%
Alliant Power Pro 300-MP	11.9	2,005	12.2	2,050	12.6	2,105	12.9	2,150	13.2	2,195	50,100	101%
Norma R123	10.2	2,005	10.5	2,055	10.8	2,105	11.0	2,135	11.3	2,185	50,100	85%
Accurate No. 11FS	11.4	1,980	11.7	2,030	12.1	2,090	12.4	2,135	12.7	2,180	50,000	88%
Hodgdon Lil'Gun	11.8	1,985	12.1	2,030	12.4	2,075	12.8	2,130	13.1	2,175	50,100	101%
Accurate No. 9	10.1	1,945	10.4	2,000	10.6	2,035	10.9	2,085	11.2	2,135	50,000	79%
Shooters World Blackout	13.0	1,920	13.3	1,960	13.7	2,015	14.1	2,070	14.4	2,110	50,600	101%
Hodgdon H110	10.9	1,900	11.2	1,950	11.5	1,995	11.8	2,040	12.1	2,085	50,200	86%
Vihtavuori N110	10.0	1,860	10.3	1,910	10.6	1,955	10.8	1,985	11.1	2,035	49,800	90%
Accurate 4100	10.4	1,865	10.7	1,910	10.9	1,940	11.2	1,985	11.5	2,030	50,200	83%
Alliant 2400	10.1	1,850	10.4	1,900	10.6	1,930	10.9	1,975	11.2	2,020	50,700	85%
IMR 4227	11.4	1,815	11.7	1,855	12.1	1,915	12.4	1,955	12.7	2,000	50,100	99%
Accurate LT-30	13.6	1,795	14.0	1,850	14.3	1,890	14.7	1,940	15.1	1,995	49,100	105%
Reload Swiss RS30	10.8	1,820	11.1	1,865	11.4	1,910	11.7	1,950	12.0	1,995	50,700	101%
Hodgdon H4227	10.5	1,780	10.8	1,825	11.1	1,870	11.4	1,915	11.7	1,960	50,200	93%

.257 Roberts

Ned H. Roberts developed the cartridge that bears his name during the 1920s. He chose the 7x57mm Mauser as the parent case because its capacity suited .25-caliber bullets and the powders of the day. Roberts shortened the case slightly, reduced the shoulder angle and necked it down to .257 inch. Remington adopted a modified version as a factory cartridge in 1934. The company changed the shoulder angle and offered the round in its Model 30 bolt-action rifle.

Original factory loads used 75-, 100- and 117-grain bullets. In the 1980s ammunition makers introduced +P loadings at a higher pressure. The .257 Roberts +P remains the only rifle cartridge with an official +P designation. Hunters value the cartridge for deer, pronghorn and varmints. Its recoil is moderate. The .243 Winchester and other cartridges have overtaken it in popularity. Even so the .257 Roberts remains in production. Some major manufacturers still chamber rifles for it.

Cartridge specifications	
Bullet Diameter	**0.257" (6.53 mm)**
Max Case Length	**2.233" (56.72 mm)**
Case Trim Length	**2.223" (56.46 mm)**
Max COAL	**2.780" (70.61 mm)**
Primer Pocket	**Large Rifle**
Standard Twist	**1:10"**
Case Capacity	**56.0 gr H_2O**
Max Pressure	**54,000 psi (SAAMI)**

75 gr Bullet · 25" barrel

COAL: 2.700" • Bullet length: 0.764" • Seat depth: 0.297" • Usable capacity: 52.2 / 56.0 gr H_2O

Powder	STEP 1 · 90%		STEP 2		STEP 3		STEP 4		STEP 5 · LIMIT			
	gr	fps	gr	fps	gr	fps	gr	fps	gr	fps	psi	Fill
Hodgdon Leverevolution	42.1	3,335	43.3	3,410	44.5	3,490	45.6	3,560	46.8	3,640	53,700	86%
Vihtavuori N550	44.4	3,305	45.6	3,380	46.8	3,450	48.1	3,530	49.3	3,605	53,900	99%
Hodgdon CFE 223	42.2	3,270	43.4	3,345	44.5	3,415	45.7	3,490	46.9	3,570	54,000	91%
Reload Swiss RS52	41.1	3,265	42.3	3,345	43.4	3,415	44.6	3,495	45.7	3,565	54,000	92%
Accurate 4350	46.5	3,215	47.8	3,300	49.1	3,385	50.4	3,470	51.7	3,555	53,900	103%
Vihtavuori N540	40.9	3,280	42.0	3,345	43.1	3,415	44.3	3,490	45.4	3,555	53,900	92%
Winchester 748	41.0	3,255	42.1	3,325	43.3	3,405	44.4	3,475	45.5	3,545	53,900	90%
Alliant Reloder 16	44.5	3,215	45.7	3,290	47.0	3,370	48.2	3,445	49.4	3,520	52,200	105%
IMR 4064	40.1	3,235	41.2	3,305	42.3	3,375	43.4	3,445	44.5	3,515	53,800	91%
Ramshot Big Game	43.6	3,210	44.8	3,285	46.0	3,360	47.2	3,435	48.4	3,510	53,700	94%
Winchester StaBALL Match	40.6	3,220	41.7	3,290	42.9	3,365	44.0	3,435	45.1	3,505	53,800	97%
Reload Swiss RS50	41.6	3,210	42.8	3,285	43.9	3,355	45.1	3,430	46.2	3,500	54,000	93%
Winchester StaBALL 6.5	45.1	3,190	46.4	3,270	47.6	3,345	48.9	3,425	50.1	3,500	53,800	97%
Alliant Reloder 15	40.1	3,210	41.2	3,280	42.3	3,350	43.4	3,420	44.5	3,490	53,900	91%
IMR 4350	45.4	3,160	46.6	3,235	47.9	3,320	49.1	3,400	50.4	3,485	53,900	104%
Winchester 760	44.5	3,175	45.7	3,250	47.0	3,330	48.2	3,410	49.4	3,485	54,000	97%
Hodgdon Varget	39.4	3,185	40.5	3,260	41.6	3,330	42.7	3,405	43.8	3,475	54,000	87%
Ramshot Hunter	45.9	3,145	47.2	3,225	48.5	3,305	49.7	3,380	51.0	3,465	54,000	104%
Hodgdon Hybrid 100V	43.9	3,120	45.1	3,200	46.3	3,275	47.6	3,365	48.8	3,445	53,200	105%
Hodgdon H414	43.6	3,125	44.8	3,200	46.0	3,275	47.2	3,350	48.4	3,425	53,800	94%

87 gr Bullet · 25" barrel

COAL: 2.750" • Bullet length: 0.928" • Seat depth: 0.410" • Usable capacity: 51.0 / 56.0 gr H_2O

Powder	STEP 1 · 90%		STEP 2		STEP 3		STEP 4		STEP 5 · LIMIT			
	gr	fps	gr	fps	gr	fps	gr	fps	gr	fps	psi	Fill
Hodgdon Leverevolution	40.2	3,125	41.3	3,195	42.5	3,270	43.6	3,340	44.7	3,410	53,800	84%
Accurate 4350	44.6	3,075	45.9	3,155	47.1	3,230	48.4	3,310	49.6	3,385	53,700	102%
Hodgdon SUPERFORMANCE	46.3	3,055	47.6	3,135	48.8	3,205	50.1	3,290	51.4	3,370	54,000	99%
Vihtavuori N550	41.9	3,090	43.0	3,155	44.2	3,225	45.4	3,295	46.5	3,360	53,900	96%
Alliant Reloder 16	42.8	3,065	44.0	3,140	45.1	3,205	46.3	3,280	47.5	3,350	53,800	103%
Hodgdon BL-C(2)	39.9	3,075	41.0	3,145	42.1	3,215	43.2	3,280	44.3	3,350	54,000	87%
Reload Swiss RS52	39.3	3,070	40.4	3,140	41.5	3,210	42.6	3,280	43.7	3,350	53,900	90%
IMR 4350	43.4	3,020	44.6	3,095	45.8	3,165	47.0	3,240	48.2	3,315	53,900	102%
Winchester StaBALL 6.5	43.3	3,025	44.5	3,095	45.7	3,170	46.9	3,240	48.1	3,315	53,900	95%
Winchester 760	42.7	3,015	43.9	3,090	45.0	3,155	46.2	3,230	47.4	3,300	54,000	96%
Ramshot Hunter	44.1	2,995	45.3	3,070	46.5	3,140	47.8	3,220	49.0	3,295	53,900	102%
IMR 4064	38.0	3,030	39.0	3,090	40.1	3,160	41.2	3,225	42.2	3,290	54,000	89%
Hodgdon H4350	42.3	2,985	43.5	3,060	44.6	3,130	45.8	3,205	47.0	3,280	53,800	93%
Vihtavuori N160	44.3	2,985	45.5	3,055	46.8	3,135	48.0	3,205	49.2	3,280	53,800	105%
Reload Swiss RS50	39.7	3,010	40.8	3,075	41.9	3,140	43.0	3,210	44.1	3,275	53,700	91%
Alliant Reloder 15	37.9	3,000	39.0	3,065	40.0	3,125	41.0	3,190	42.1	3,255	54,000	88%
Hodgdon Varget	37.4	2,985	38.5	3,055	39.5	3,120	40.5	3,185	41.6	3,250	53,800	85%
Hodgdon H380	40.5	2,975	41.6	3,040	42.8	3,110	43.9	3,180	45.0	3,245	53,800	94%
Hodgdon H414	41.8	2,965	42.9	3,030	44.1	3,105	45.3	3,180	46.4	3,245	53,800	93%
Alliant Reloder 19	44.9	2,920	46.1	2,995	47.4	3,070	48.6	3,145	49.9	3,225	53,800	104%

100 gr Bullet · 25" barrel

COAL: 2.760" • Bullet length: 0.995" • Seat depth: 0.468" • Usable capacity: 50.1 / 56.0 gr H_2O

Powder	STEP 1 · 90%		STEP 2		STEP 3		STEP 4		STEP 5 · LIMIT			
	gr	fps	gr	fps	gr	fps	gr	fps	gr	fps	psi	Fill
Accurate 4350	42.9	2,920	44.1	2,990	45.3	3,065	46.5	3,135	47.7	3,205	53,800	100%
Hodgdon SUPERFORMANCE	44.6	2,915	45.8	2,985	47.0	3,055	48.3	3,130	49.5	3,205	53,900	97%
Alliant Reloder 26	46.4	2,895	47.7	2,965	49.0	3,045	50.3	3,120	51.6	3,195	53,800	103%
Hodgdon Leverevolution	38.4	2,915	39.5	2,985	40.5	3,045	41.6	3,110	42.7	3,180	54,000	81%
Vihtavuori N555	43.6	2,895	44.8	2,965	46.0	3,035	47.2	3,105	48.4	3,175	54,000	104%
IMR 4831	43.4	2,870	44.6	2,940	45.8	3,015	47.0	3,090	48.2	3,165	54,000	103%
Alliant Reloder 23	43.6	2,880	44.8	2,950	46.0	3,020	47.2	3,090	48.4	3,160	51,900	105%
Norma 204	42.5	2,845	43.7	2,915	44.9	2,985	46.0	3,055	47.2	3,125	53,900	99%
Accurate 2700	40.8	2,850	41.9	2,915	43.0	2,980	44.2	3,050	45.3	3,115	53,800	92%
Ramshot Big Game	40.0	2,850	41.1	2,915	42.2	2,975	43.3	3,040	44.4	3,105	53,900	90%
Alliant Power Pro 4000-MR	42.8	2,825	44.0	2,895	45.1	2,960	46.3	3,030	47.5	3,100	54,000	97%
Norma MRP	44.1	2,815	45.3	2,885	46.5	2,955	47.8	3,030	49.0	3,100	53,900	102%
Hodgdon H4350	40.3	2,825	41.4	2,890	42.5	2,955	43.7	3,030	44.8	3,095	53,800	90%
Alliant Reloder 19	43.4	2,805	44.6	2,875	45.8	2,945	47.0	3,020	48.2	3,090	54,000	102%
Winchester StaBALL Match	37.2	2,820	38.2	2,880	39.3	2,945	40.3	3,005	41.3	3,065	53,800	92%
IMR 4064	36.0	2,815	37.0	2,875	38.0	2,935	39.0	2,995	40.0	3,055	53,900	85%
IMR 7828SSC	44.0	2,765	45.2	2,835	46.5	2,910	47.7	2,980	48.9	3,050	53,900	102%
Vihtavuori N150	36.5	2,800	37.5	2,860	38.5	2,920	39.6	2,985	40.6	3,045	53,800	91%
IMR 4895	35.3	2,785	36.3	2,850	37.3	2,910	38.2	2,965	39.2	3,025	53,800	81%
Alliant Reloder 15	35.8	2,780	36.8	2,840	37.8	2,900	38.8	2,960	39.8	3,020	53,900	85%

110 gr Bullet · 25" barrel

COAL: 2.750" • Bullet length: 1.195" • Seat depth: 0.678" • Usable capacity: 47.7 / 56.0 gr H_2O

Powder	STEP 1 · 90%		STEP 2		STEP 3		STEP 4		STEP 5 · LIMIT			
	gr	fps	gr	fps	gr	fps	gr	fps	gr	fps	psi	Fill
Alliant Reloder 26	44.2	2,770	45.4	2,835	46.7	2,915	47.9	2,985	49.1	3,055	53,900	103%
Hodgdon SUPERFORMANCE	42.4	2,780	43.6	2,845	44.8	2,915	45.9	2,980	47.1	3,055	54,000	97%
Accurate 4350	40.8	2,780	41.9	2,845	43.0	2,910	44.2	2,980	45.3	3,045	53,800	99%
Vihtavuori N555	41.2	2,760	42.4	2,830	43.5	2,895	44.6	2,960	45.8	3,030	54,000	103%
IMR 4831	41.2	2,735	42.4	2,805	43.5	2,875	44.6	2,940	45.8	3,015	53,900	103%
Alliant Reloder 23	41.5	2,745	42.6	2,810	43.8	2,875	45.0	2,945	46.1	3,010	52,200	105%
Hodgdon Leverevolution	36.4	2,750	37.4	2,815	38.4	2,875	39.4	2,935	40.4	2,995	54,000	81%
IMR 4350	39.2	2,710	40.3	2,775	41.4	2,840	42.5	2,905	43.6	2,970	53,900	98%
Ramshot Hunter	40.3	2,700	41.4	2,760	42.5	2,825	43.7	2,895	44.8	2,960	53,900	100%
Norma MRP	41.9	2,685	43.0	2,750	44.2	2,815	45.4	2,885	46.5	2,950	53,800	101%
Winchester StaBALL 6.5	39.4	2,700	40.5	2,760	41.6	2,825	42.7	2,890	43.8	2,950	53,900	93%
Winchester 760	38.8	2,695	39.9	2,760	41.0	2,825	42.0	2,880	43.1	2,945	53,700	93%
Alliant Reloder 17	37.7	2,680	38.8	2,745	39.8	2,805	40.9	2,875	41.9	2,935	53,800	88%
Vihtavuori N550	37.1	2,695	38.1	2,755	39.2	2,815	40.2	2,870	41.2	2,930	53,800	91%
IMR 7828	42.7	2,650	43.9	2,715	45.0	2,780	46.2	2,850	47.4	2,920	54,000	100%
Hodgdon H414	38.1	2,660	39.1	2,720	40.2	2,780	41.3	2,845	42.3	2,905	54,000	90%
Winchester Supreme 780	43.9	2,625	45.1	2,690	46.3	2,760	47.6	2,835	48.8	2,905	53,800	103%
IMR 4064	33.9	2,645	34.9	2,705	35.8	2,760	36.8	2,820	37.7	2,875	54,000	85%
Hodgdon Varget	33.7	2,625	34.6	2,680	35.5	2,735	36.5	2,800	37.4	2,855	53,900	82%
Alliant Reloder 15	33.7	2,615	34.6	2,665	35.5	2,720	36.5	2,780	37.4	2,835	53,800	84%

117 gr Bullet · 25" barrel

COAL: 2.750" • Bullet length: 1.170" • Seat depth: 0.653" • Usable capacity: 48.2 / 56.0 gr H_2O

Powder	STEP 1 · 90%		STEP 2		STEP 3		STEP 4		STEP 5 · LIMIT			
	gr	fps	gr	fps	gr	fps	gr	fps	gr	fps	psi	Fill
Alliant Reloder 26	43.9	2,725	45.1	2,790	46.3	2,860	47.6	2,930	48.8	3,000	53,800	102%
Hodgdon SUPERFORMANCE	42.1	2,725	43.3	2,795	44.5	2,865	45.6	2,925	46.8	2,995	53,900	95%
Accurate 4350	40.5	2,725	41.6	2,790	42.8	2,855	43.9	2,920	45.0	2,985	54,000	98%
Alliant Reloder 23	41.7	2,720	42.9	2,785	44.0	2,850	45.1	2,910	46.3	2,980	53,700	104%
Vihtavuori N560	43.6	2,710	44.8	2,775	46.0	2,840	47.2	2,905	48.4	2,970	51,500	105%
IMR 4831	41.0	2,690	42.1	2,755	43.3	2,825	44.5	2,895	45.6	2,965	53,900	102%
Vihtavuori N555	40.6	2,705	41.7	2,765	42.9	2,835	44.0	2,895	45.1	2,960	53,700	100%
Alliant Reloder 22	41.9	2,665	43.0	2,730	44.2	2,795	45.4	2,865	46.5	2,930	53,900	102%
Reload Swiss RS70	41.8	2,650	42.9	2,715	44.1	2,780	45.3	2,850	46.4	2,915	53,800	97%
Alliant Reloder 19	41.0	2,640	42.1	2,700	43.3	2,770	44.4	2,835	45.5	2,900	53,700	100%
IMR 4350	38.8	2,655	39.9	2,715	41.0	2,780	42.0	2,835	43.1	2,900	53,900	96%
Alliant Reloder 16	37.8	2,645	38.8	2,700	39.9	2,760	41.0	2,825	42.0	2,880	53,700	97%
Winchester StaBALL 6.5	39.1	2,640	40.2	2,700	41.3	2,760	42.3	2,815	43.4	2,880	53,900	91%
Vihtavuori N165	42.4	2,620	43.6	2,685	44.8	2,750	45.9	2,810	47.1	2,875	54,000	105%
Winchester Supreme 780	43.7	2,600	44.9	2,665	46.2	2,735	47.4	2,805	48.6	2,875	54,000	101%
Accurate MagPro	44.6	2,590	45.8	2,655	47.0	2,725	48.3	2,795	49.5	2,865	52,800	105%
Hodgdon H4350	37.6	2,620	38.6	2,675	39.7	2,740	40.8	2,805	41.8	2,860	53,800	87%
Vihtavuori N160	39.7	2,620	40.8	2,680	41.9	2,740	43.0	2,800	44.1	2,860	53,800	99%
Reload Swiss RS76	45.1	2,590	46.4	2,655	47.6	2,720	48.9	2,790	50.1	2,855	51,000	105%
IMR 4064	33.5	2,575	34.4	2,625	35.4	2,685	36.3	2,740	37.2	2,790	54,000	83%

.257 Weatherby Magnum

Roy Weatherby designed the .257 Weatherby Magnum during World War II and introduced it commercially in 1945. It was one of the earliest of his proprietary magnums. The cartridge is based on the belted .375 H&H Magnum case. This case is shortened to about 2.5 inches and necked down to .257 caliber. It carries the double-radius shoulder that distinguishes Weatherby cartridges. Both SAAMI and C.I.P. publish specifications for it. Of all the cartridges Roy Weatherby developed the .257 is generally described as his favorite.

Weatherby's factory loads use bullets of 92 to 115 grains at about 3,400 to 3,700 fps. This places the cartridge among the fastest commercial .25-caliber rounds. It is used chiefly for pronghorn, deer and mountain sheep and goats in open country. It is also suitable for lighter African plains game. Weatherby continues to chamber its Mark V rifles for the cartridge and to load factory ammunition for it.

Cartridge specifications	
Bullet Diameter	**0.257" (6.53 mm)**
Max Case Length	**2.549" (64.75 mm)**
Case Trim Length	**2.539" (64.49 mm)**
Max COAL	**3.209" (81.51 mm)**
Primer Pocket	**Large Rifle**
Standard Twist	**1:10"**
Case Capacity	**86.0 gr H_2O**
Max Pressure	**62,500 psi (SAAMI)**

75 gr Bullet · 25" barrel

COAL: 3.056" • Bullet length: 0.764" • Seat depth: 0.257" • Usable capacity: 82.8 / 86.0 gr H_2O

Powder	STEP 1 · 90%		STEP 2		STEP 3		STEP 4		STEP 5 · LIMIT			
	gr	fps	gr	fps	gr	fps	gr	fps	gr	fps	psi	Fill
Hodgdon H1000	71.9	3,590	73.9	3,685	75.9	3,780	77.9	3,875	79.9	3,970	62,300	105%
Alliant Reloder 26	68.9	3,600	70.8	3,685	72.7	3,775	74.6	3,865	76.5	3,955	62,400	93%
Alliant Reloder 22	66.9	3,575	68.8	3,665	70.6	3,750	72.5	3,840	74.3	3,925	62,400	95%
Alliant Reloder 23	65.0	3,590	66.8	3,670	68.6	3,755	70.4	3,840	72.2	3,925	62,300	95%
Accurate 4350	62.8	3,580	64.5	3,660	66.3	3,745	68.0	3,825	69.8	3,915	62,500	88%
Hodgdon H4350	62.2	3,585	63.9	3,670	65.7	3,755	67.4	3,835	69.1	3,915	62,300	84%
Hodgdon Hybrid 100V	61.5	3,570	63.2	3,655	64.9	3,735	66.6	3,820	68.3	3,905	62,500	93%
Hodgdon Retumbo	71.6	3,530	73.6	3,620	75.6	3,715	77.6	3,805	79.6	3,900	62,400	100%
Vihtavuori N560	67.2	3,545	69.1	3,630	71.0	3,710	72.8	3,795	74.7	3,880	62,500	94%
Reload Swiss RS76	71.9	3,510	73.9	3,600	75.9	3,690	77.9	3,780	79.9	3,870	62,400	97%
Alliant Reloder 19	65.2	3,520	67.0	3,605	68.8	3,690	70.6	3,775	72.4	3,865	62,300	93%
Winchester StaBALL HD	73.4	3,490	75.5	3,585	77.5	3,675	79.5	3,770	81.6	3,865	62,400	100%
IMR 4831	63.3	3,520	65.0	3,600	66.8	3,690	68.5	3,775	70.3	3,860	62,400	91%
IMR 4350	61.5	3,520	63.2	3,600	64.9	3,680	66.6	3,760	68.3	3,840	62,400	89%
Norma MRP	65.7	3,500	67.5	3,585	69.3	3,665	71.2	3,755	73.0	3,840	62,500	92%
Alliant Reloder 25	69.2	3,475	71.1	3,565	73.1	3,655	75.0	3,745	76.9	3,835	62,400	101%
Vihtavuori N160	62.7	3,475	64.5	3,555	66.2	3,630	68.0	3,715	69.7	3,790	62,400	91%
Vihtavuori N565	69.0	3,425	70.9	3,510	72.8	3,600	74.8	3,695	76.7	3,790	62,300	97%
Winchester Supreme 780	68.6	3,430	70.5	3,515	72.4	3,605	74.3	3,695	76.2	3,785	62,400	93%
Vihtavuori N165	66.0	3,440	67.8	3,520	69.7	3,605	71.5	3,685	73.3	3,765	62,400	95%

87 gr Bullet · 25" barrel

COAL: 3.150" • Bullet length: 0.928" • Seat depth: 0.327" • Usable capacity: 82.1 / 86.0 gr H_2O

Powder	STEP 1 · 90%		STEP 2		STEP 3		STEP 4		STEP 5 · LIMIT			
	gr	fps	gr	fps	gr	fps	gr	fps	gr	fps	psi	Fill
Hodgdon H1000	70.0	3,445	72.0	3,535	73.9	3,620	75.8	3,710	77.8	3,800	62,400	103%
Alliant Reloder 26	66.8	3,435	68.7	3,520	70.5	3,600	72.3	3,685	74.2	3,770	62,500	91%
Alliant Reloder 22	64.8	3,410	66.6	3,495	68.4	3,575	70.2	3,660	72.0	3,740	62,400	93%
Hodgdon Retumbo	69.8	3,385	71.7	3,470	73.7	3,555	75.6	3,640	77.5	3,725	62,400	98%
Alliant Reloder 23	62.9	3,405	64.7	3,485	66.4	3,560	68.2	3,640	69.9	3,715	62,400	92%
Hodgdon Hybrid 100V	59.8	3,400	61.5	3,480	63.1	3,555	64.8	3,630	66.4	3,710	62,300	91%
Ramshot Grand	69.6	3,365	71.5	3,450	73.4	3,535	75.4	3,620	77.3	3,710	62,400	96%
Hodgdon H4350	59.9	3,395	61.6	3,475	63.3	3,550	64.9	3,625	66.6	3,705	62,400	82%
Winchester StaBALL HD	71.6	3,355	73.6	3,440	75.6	3,530	77.6	3,615	79.6	3,705	62,500	99%
Alliant Reloder 19	63.4	3,370	65.2	3,455	66.9	3,530	68.7	3,615	70.4	3,695	62,300	91%
Reload Swiss RS76	70.0	3,355	72.0	3,440	73.9	3,520	75.8	3,605	77.8	3,690	62,400	96%
Vihtavuori N570	69.4	3,330	71.3	3,415	73.3	3,510	75.2	3,595	77.1	3,685	62,300	97%
IMR 7828SSC	64.7	3,350	66.5	3,430	68.3	3,510	70.1	3,590	71.9	3,670	62,400	91%
IMR 8133	70.6	3,300	72.5	3,385	74.5	3,475	76.5	3,565	78.4	3,655	62,300	99%
Winchester Supreme 780	66.5	3,295	68.3	3,375	70.2	3,460	72.1	3,545	73.9	3,630	62,300	91%
Alliant Reloder 16	57.6	3,315	59.2	3,385	60.8	3,460	62.4	3,530	64.0	3,600	62,400	86%
Accurate 3100	63.0	3,280	64.8	3,360	66.5	3,435	68.3	3,520	70.0	3,595	62,400	93%
Ramshot Magnum	68.9	3,260	70.8	3,340	72.7	3,425	74.6	3,505	76.5	3,590	62,500	94%
Vihtavuori N170	67.7	3,280	69.6	3,355	71.5	3,430	73.3	3,505	75.2	3,580	62,400	95%
Vihtavuori N165	63.5	3,260	65.3	3,340	67.0	3,410	68.8	3,490	70.6	3,565	62,300	92%

100 gr Bullet · 25" barrel

COAL: 3.150" • Bullet length: 1.040" • Seat depth: 0.440" • Usable capacity: 80.5 / 86.0 gr H_2O

Powder	STEP 1 · 90%		STEP 2		STEP 3		STEP 4		STEP 5 · LIMIT			
	gr	fps	gr	fps	gr	fps	gr	fps	gr	fps	psi	Fill
Hodgdon H1000	67.4	3,280	69.3	3,360	71.2	3,445	73.0	3,520	74.9	3,605	62,300	101%
Alliant Reloder 26	64.0	3,255	65.8	3,330	67.5	3,405	69.3	3,485	71.1	3,565	62,300	89%
Alliant Reloder 22	62.2	3,235	63.9	3,310	65.7	3,390	67.4	3,465	69.1	3,540	62,500	91%
Hodgdon Retumbo	67.2	3,220	69.1	3,300	71.0	3,380	72.8	3,455	74.7	3,540	62,400	96%
Ramshot Grand	67.2	3,205	69.1	3,285	71.0	3,365	72.8	3,445	74.7	3,525	62,300	94%
Winchester StaBALL HD	69.1	3,200	71.0	3,275	72.9	3,355	74.9	3,440	76.8	3,520	62,500	97%
Vihtavuori N570	66.3	3,190	68.2	3,270	70.0	3,350	71.8	3,425	73.7	3,510	62,400	94%
Hodgdon Hybrid 100V	57.6	3,215	59.2	3,285	60.8	3,360	62.4	3,430	64.0	3,505	62,300	89%
Alliant Reloder 25	65.1	3,185	66.9	3,265	68.7	3,340	70.5	3,420	72.3	3,500	62,300	98%
Accurate MagPro	66.0	3,180	67.8	3,255	69.7	3,340	71.5	3,415	73.3	3,495	62,400	93%
Alliant Reloder 23	60.2	3,205	61.9	3,280	63.6	3,355	65.2	3,420	66.9	3,495	62,500	90%
IMR 8133	68.3	3,165	70.2	3,250	72.1	3,330	74.0	3,415	75.9	3,495	62,500	98%
Reload Swiss RS76	67.5	3,185	69.4	3,265	71.3	3,340	73.1	3,415	75.0	3,495	62,400	94%
IMR 7828SSC	61.9	3,175	63.6	3,245	65.3	3,320	67.1	3,400	68.8	3,470	62,400	89%
Hodgdon H4831	61.7	3,170	63.4	3,240	65.2	3,320	66.9	3,395	68.6	3,465	62,300	91%
Ramshot LRT	72.7	3,100	74.7	3,185	76.8	3,270	78.8	3,355	80.8	3,440	62,300	102%
IMR 7977	64.8	3,125	66.6	3,200	68.4	3,280	70.2	3,355	72.0	3,435	62,300	97%
Ramshot Magnum	66.4	3,115	68.3	3,195	70.1	3,270	72.0	3,350	73.8	3,430	62,400	92%
Vihtavuori N565	62.6	3,120	64.3	3,190	66.1	3,265	67.8	3,340	69.6	3,415	62,400	91%
Accurate 3100	60.4	3,115	62.1	3,190	63.8	3,265	65.4	3,335	67.1	3,410	62,400	90%

115 gr Bullet · 25" barrel

COAL: 3.050" • Bullet length: 1.209" • Seat depth: 0.708" • Usable capacity: 77.3 / 86.0 gr H_2O

Powder	STEP 1 · 90%		STEP 2		STEP 3		STEP 4		STEP 5 · LIMIT			
	gr	fps	gr	fps	gr	fps	gr	fps	gr	fps	psi	Fill
Hodgdon H1000	63.8	3,090	65.6	3,165	67.3	3,235	69.1	3,310	70.9	3,390	62,300	100%
Alliant Reloder 26	60.3	3,050	62.0	3,125	63.6	3,190	65.3	3,265	67.0	3,340	62,400	87%
Hodgdon Retumbo	63.6	3,030	65.4	3,100	67.2	3,175	68.9	3,245	70.7	3,325	62,300	95%
Ramshot Grand	63.9	3,025	65.7	3,100	67.5	3,175	69.2	3,245	71.0	3,325	62,400	94%
Winchester StaBALL HD	65.5	3,015	67.3	3,085	69.2	3,165	71.0	3,240	72.8	3,315	62,400	96%
Alliant Reloder 22	58.6	3,030	60.2	3,100	61.8	3,165	63.5	3,240	65.1	3,310	62,400	89%
Accurate MagPro	62.7	3,005	64.5	3,080	66.2	3,155	68.0	3,230	69.7	3,305	62,500	92%
IMR 8133	64.9	3,000	66.7	3,075	68.5	3,150	70.3	3,225	72.1	3,305	62,400	97%
Vihtavuori N570	62.1	3,010	63.8	3,080	65.5	3,150	67.3	3,230	69.0	3,300	62,300	92%
Alliant Reloder 25	61.7	3,005	63.4	3,075	65.2	3,150	66.9	3,225	68.6	3,295	62,500	97%
Vihtavuori N568	63.6	2,975	65.4	3,055	67.2	3,135	68.9	3,210	70.7	3,290	62,500	95%
Reload Swiss RS76	64.0	2,995	65.8	3,065	67.5	3,135	69.3	3,205	71.1	3,280	62,400	93%
IMR 4831	56.3	3,000	57.8	3,065	59.4	3,135	61.0	3,210	62.5	3,275	62,500	87%
Ramshot LRT	69.2	2,950	71.1	3,025	73.1	3,105	75.0	3,185	76.9	3,260	62,400	101%
IMR 7828SSC	58.2	2,975	59.8	3,040	61.5	3,115	63.1	3,180	64.7	3,250	62,400	87%
Ramshot Magnum	63.0	2,950	64.8	3,025	66.5	3,095	68.3	3,170	70.0	3,245	62,400	91%
Hodgdon H4831	58.1	2,970	59.7	3,035	61.3	3,100	63.0	3,175	64.6	3,240	62,400	90%
IMR 7977	61.4	2,945	63.1	3,015	64.8	3,090	66.5	3,160	68.2	3,230	62,300	96%
IMR 7828	58.1	2,935	59.7	3,000	61.3	3,070	63.0	3,140	64.6	3,210	62,400	84%
Alliant Power Pro 4000-MR	55.9	2,930	57.5	3,000	59.0	3,065	60.5	3,130	62.1	3,200	62,500	82%

120 gr Bullet · 25" barrel

COAL: 3.050" • Bullet length: 1.140" • Seat depth: 0.639" • Usable capacity: 78.4 / 86.0 gr H_2O

Powder	STEP 1 · 90%		STEP 2		STEP 3		STEP 4		STEP 5 · LIMIT			
	gr	fps	gr	fps	gr	fps	gr	fps	gr	fps	psi	Fill
Hodgdon H1000	63.8	3,045	65.6	3,120	67.3	3,190	69.1	3,265	70.9	3,340	62,300	98%
Ramshot Grand	64.1	2,990	65.9	3,065	67.7	3,140	69.4	3,210	71.2	3,285	62,500	92%
Alliant Reloder 26	60.1	3,000	61.8	3,075	63.5	3,145	65.1	3,210	66.8	3,280	62,300	86%
Hodgdon Retumbo	63.6	2,990	65.4	3,060	67.2	3,130	68.9	3,200	70.7	3,275	62,300	94%
IMR 8133	65.1	2,970	66.9	3,045	68.7	3,120	70.5	3,195	72.3	3,270	62,400	96%
Accurate MagPro	62.8	2,970	64.5	3,045	66.3	3,115	68.0	3,190	69.8	3,265	62,300	91%
Winchester StaBALL HD	65.5	2,975	67.3	3,045	69.2	3,120	71.0	3,195	72.8	3,265	62,300	95%
Vihtavuori N568	63.7	2,955	65.5	3,030	67.3	3,105	69.0	3,180	70.8	3,260	62,400	93%
Alliant Reloder 22	58.5	2,985	60.1	3,050	61.8	3,120	63.4	3,190	65.0	3,255	62,500	88%
Alliant Reloder 25	61.8	2,970	63.5	3,040	65.3	3,115	67.0	3,185	68.7	3,255	62,400	96%
Ramshot LRT	69.4	2,925	71.3	2,995	73.3	3,075	75.2	3,150	77.1	3,230	62,400	100%
Reload Swiss RS76	64.0	2,950	65.8	3,020	67.5	3,090	69.3	3,160	71.1	3,230	62,300	91%
IMR 4831	56.3	2,960	57.8	3,025	59.4	3,090	61.0	3,160	62.5	3,225	62,300	86%
Hodgdon US 869	72.0	2,885	74.0	2,965	76.0	3,045	78.0	3,130	80.0	3,215	59,700	105%
Ramshot Magnum	63.1	2,920	64.8	2,990	66.6	3,060	68.3	3,130	70.1	3,205	62,400	90%
Alliant Reloder 50	66.1	2,880	67.9	2,960	69.8	3,040	71.6	3,120	73.4	3,200	61,000	105%
IMR 7828SSC	58.1	2,930	59.7	2,995	61.3	3,065	63.0	3,130	64.6	3,200	62,300	86%
Alliant Reloder 33	68.2	2,895	70.1	2,970	72.0	3,045	73.9	3,120	75.8	3,195	60,600	105%
Hodgdon H4831	58.1	2,930	59.7	2,995	61.3	3,060	62.9	3,125	64.5	3,190	62,300	88%
IMR 7977	61.5	2,915	63.2	2,980	64.9	3,050	66.6	3,120	68.3	3,190	62,300	94%

26 Nosler

Nosler introduced the 26 Nosler in 2014 as the first cartridge in its own line of proprietary magnum cartridges. It uses a beltless rebated-rim case derived from the .300 Remington Ultra Magnum. That case in turn traces back to the .404 Jeffery. The case is shortened so that loaded rounds match the overall length of the .30-06 Springfield. They therefore fit standard-length actions. The cartridge has been standardized by SAAMI.

Nosler factory ammunition drives a 140-grain bullet at about 3,300 fps. Lighter bullets go somewhat faster. At the time of its release this made it the most powerful commercial 6.5mm cartridge. It is intended for long-range hunting of deer, pronghorn, sheep and similar game. Its large powder capacity relative to bore size produces substantial muzzle blast. It can also shorten barrel life. The 26 Nosler case served as the basis for the 28 Nosler, 30 Nosler and 33 Nosler.

Cartridge specifications	
Bullet Diameter	**0.264" (6.71 mm)**
Max Case Length	**2.590" (65.79 mm)**
Case Trim Length	**2.580" (65.54 mm)**
Max COAL	**3.340" (84.84 mm)**
Primer Pocket	**Large Rifle**
Standard Twist	**1:7"**
Case Capacity	**98.6 gr H_2O**
Max Pressure	**65,000 psi (SAAMI)**

100 gr Bullet · 25" barrel

COAL: 3.240" • Bullet length: 0.998" • Seat depth: 0.348" • Usable capacity: 94.0 / 98.7 gr H_2O

Powder	STEP 1 · 90%		STEP 2		STEP 3		STEP 4		STEP 5 · LIMIT			
	gr	fps	gr	fps	gr	fps	gr	fps	gr	fps	psi	Fill
Ramshot Magnum	77.8	3,410	80.0	3,495	82.1	3,580	84.3	3,670	86.4	3,755	64,900	92%
Ramshot Grand	75.2	3,375	77.3	3,455	79.3	3,535	81.4	3,620	83.5	3,700	65,000	90%
Alliant Reloder 26	70.6	3,375	72.5	3,455	74.5	3,535	76.5	3,615	78.4	3,690	64,900	84%
Accurate MagPro	73.8	3,340	75.8	3,420	77.9	3,505	80.0	3,590	82.0	3,670	64,900	89%
Ramshot LRT	82.3	3,310	84.6	3,400	86.8	3,480	89.1	3,570	91.4	3,665	64,900	99%
Hodgdon Hybrid 100V	63.7	3,345	65.5	3,425	67.3	3,500	69.0	3,570	70.8	3,645	65,000	84%
Hodgdon US 869	85.7	3,250	88.1	3,345	90.5	3,445	92.8	3,535	95.2	3,640	64,900	104%
Alliant Reloder 25	71.9	3,310	73.9	3,390	75.9	3,470	77.9	3,550	79.9	3,630	64,900	93%
Hodgdon H1000	71.9	3,305	73.9	3,380	75.9	3,460	77.9	3,540	79.9	3,620	64,900	92%
Alliant Reloder 22	67.4	3,310	69.3	3,385	71.2	3,465	73.0	3,535	74.9	3,615	64,800	85%
Alliant Reloder 33	80.3	3,250	82.5	3,330	84.8	3,420	87.0	3,505	89.2	3,590	64,900	103%
Hodgdon Retumbo	72.2	3,275	74.2	3,350	76.2	3,425	78.2	3,505	80.2	3,585	64,900	89%
IMR 8133	74.6	3,255	76.7	3,335	78.8	3,420	80.8	3,500	82.9	3,585	64,900	92%
IMR 7828SSC	68.0	3,280	69.9	3,355	71.8	3,430	73.6	3,505	75.5	3,580	65,000	83%
Norma 204	64.7	3,290	66.5	3,365	68.3	3,435	70.1	3,510	71.9	3,580	65,000	80%
IMR 7977	71.7	3,255	73.7	3,330	75.7	3,410	77.7	3,490	79.7	3,570	64,900	92%
Vihtavuori N568	74.2	3,230	76.3	3,315	78.3	3,400	80.4	3,485	82.4	3,570	65,000	91%
Winchester Supreme 780	70.2	3,255	72.2	3,335	74.1	3,415	76.0	3,490	78.0	3,570	64,900	83%
Vihtavuori N560	67.0	3,260	68.8	3,325	70.7	3,400	72.6	3,470	74.4	3,540	65,000	83%
Vihtavuori N165	66.7	3,195	68.5	3,260	70.4	3,335	72.3	3,405	74.1	3,475	64,900	85%

120 gr Bullet · 25" barrel

COAL: 3.300" • Bullet length: 1.230" • Seat depth: 0.520" • Usable capacity: 91.7 / 98.7 gr H_2O

Powder	STEP 1 · 90%		STEP 2		STEP 3		STEP 4		STEP 5 · LIMIT			
	gr	fps	gr	fps	gr	fps	gr	fps	gr	fps	psi	Fill
Ramshot Magnum	73.8	3,185	75.8	3,260	77.9	3,340	80.0	3,420	82.0	3,500	64,800	90%
Hodgdon US 869	82.0	3,095	84.3	3,185	86.5	3,265	88.8	3,355	91.1	3,445	64,800	102%
Ramshot Grand	71.4	3,130	73.4	3,210	75.3	3,280	77.3	3,355	79.3	3,430	64,800	88%
Ramshot LRT	78.3	3,105	80.5	3,185	82.7	3,265	84.8	3,340	87.0	3,425	64,900	97%
Accurate MagPro	70.2	3,120	72.2	3,195	74.1	3,270	76.0	3,345	78.0	3,420	64,900	87%
Alliant Reloder 26	66.1	3,105	67.9	3,175	69.8	3,250	71.6	3,320	73.4	3,390	64,800	80%
Alliant Reloder 25	68.1	3,075	70.0	3,150	71.9	3,220	73.8	3,290	75.7	3,365	64,900	90%
Alliant Reloder 33	76.3	3,045	78.4	3,120	80.5	3,195	82.7	3,275	84.8	3,355	64,800	100%
Reload Swiss RS76	70.5	3,060	72.5	3,135	74.4	3,200	76.3	3,270	78.3	3,345	64,900	86%
Hodgdon H1000	67.8	3,060	69.7	3,130	71.5	3,200	73.4	3,270	75.3	3,340	64,800	89%
IMR 8133	70.9	3,045	72.9	3,120	74.8	3,190	76.8	3,265	78.8	3,340	64,900	89%
Vihtavuori N570	67.1	3,040	68.9	3,110	70.8	3,185	72.7	3,255	74.5	3,325	64,900	84%
Alliant Reloder 22	63.2	3,045	65.0	3,115	66.7	3,180	68.5	3,250	70.2	3,315	64,900	81%
Winchester StaBALL HD	70.5	3,025	72.5	3,100	74.4	3,170	76.3	3,240	78.3	3,315	65,000	87%
Hodgdon Retumbo	68.0	3,025	69.9	3,095	71.8	3,165	73.7	3,235	75.6	3,305	65,000	86%
Winchester Supreme 780	65.9	3,015	67.7	3,085	69.6	3,160	71.4	3,230	73.2	3,300	64,900	80%
Alliant Reloder 23	61.7	3,030	63.4	3,095	65.2	3,165	66.9	3,230	68.6	3,295	64,900	81%
Hodgdon H4831	63.0	2,995	64.8	3,065	66.5	3,125	68.3	3,195	70.0	3,260	64,800	82%
Hodgdon H50BMG	76.0	2,950	78.1	3,025	80.2	3,100	82.3	3,170	84.4	3,245	64,900	94%
Vihtavuori N165	62.2	2,920	63.9	2,980	65.7	3,050	67.4	3,110	69.1	3,170	64,900	81%

129 gr Bullet · 25" barrel

COAL: 3.300" • Bullet length: 1.264" • Seat depth: 0.554" • Usable capacity: 91.4 / 98.7 gr H_2O

Powder	STEP 1 · 90%		STEP 2		STEP 3		STEP 4		STEP 5 · LIMIT			
	gr	fps	gr	fps	gr	fps	gr	fps	gr	fps	psi	Fill
Ramshot Magnum	72.6	3,100	74.6	3,175	76.7	3,255	78.7	3,330	80.7	3,405	64,800	89%
Hodgdon US 869	81.0	3,040	83.3	3,125	85.5	3,205	87.8	3,290	90.0	3,375	64,800	101%
Ramshot Grand	70.3	3,045	72.3	3,120	74.2	3,190	76.1	3,260	78.1	3,335	64,800	87%
Ramshot LRT	77.1	3,025	79.3	3,105	81.4	3,180	83.5	3,255	85.7	3,335	64,900	95%
Accurate MagPro	69.1	3,035	71.0	3,110	72.9	3,180	74.9	3,255	76.8	3,325	64,800	86%
Vihtavuori N568	69.1	2,990	71.0	3,065	72.9	3,135	74.9	3,215	76.8	3,290	64,900	87%
Alliant Reloder 25	67.1	2,995	68.9	3,065	70.8	3,135	72.7	3,205	74.5	3,270	64,900	89%
Alliant Reloder 33	75.2	2,975	77.3	3,045	79.3	3,115	81.4	3,190	83.5	3,270	64,800	99%
IMR 8133	69.9	2,970	71.9	3,045	73.8	3,115	75.8	3,185	77.7	3,255	65,000	88%
Reload Swiss RS76	69.3	2,970	71.2	3,035	73.2	3,110	75.1	3,175	77.0	3,245	65,000	85%
Hodgdon H1000	66.5	2,970	68.3	3,035	70.2	3,105	72.1	3,175	73.9	3,240	64,800	88%
Vihtavuori N570	65.5	2,950	67.3	3,015	69.2	3,090	71.0	3,155	72.8	3,225	65,000	82%
IMR 7977	66.8	2,940	68.7	3,010	70.5	3,075	72.3	3,145	74.2	3,215	65,000	88%
Winchester StaBALL HD	69.2	2,935	71.1	3,005	73.1	3,075	75.0	3,145	76.9	3,215	64,900	86%
Alliant Reloder 50	71.6	2,895	73.6	2,970	75.5	3,045	77.5	3,120	79.5	3,200	64,900	98%
Hodgdon Retumbo	66.7	2,935	68.5	3,000	70.4	3,065	72.3	3,135	74.1	3,200	64,800	84%
Hodgdon H50BMG	74.8	2,880	76.9	2,950	78.9	3,020	81.0	3,090	83.1	3,165	65,000	93%
Vihtavuori 24N41	70.6	2,880	72.5	2,950	74.5	3,020	76.5	3,095	78.4	3,165	64,900	87%
Hodgdon H4831	61.8	2,905	63.5	2,965	65.3	3,035	67.0	3,100	68.7	3,160	65,000	81%
Accurate 3100	61.3	2,900	63.0	2,960	64.7	3,025	66.4	3,090	68.1	3,155	64,900	81%

140 gr Bullet · 25" barrel

COAL: 3.290" • Bullet length: 1.325" • Seat depth: 0.625" • Usable capacity: 90.4 / 98.7 gr H_2O

Powder	STEP 1 · 90%		STEP 2		STEP 3		STEP 4		STEP 5 · LIMIT			
	gr	fps	gr	fps	gr	fps	gr	fps	gr	fps	psi	Fill
Ramshot Magnum	70.7	2,995	72.7	3,065	74.7	3,140	76.6	3,210	78.6	3,285	64,800	87%
Reload Swiss RS80	74.7	2,970	76.8	3,050	78.8	3,125	80.9	3,205	83.0	3,285	64,800	92%
Hodgdon US 869	79.3	2,960	81.5	3,035	83.7	3,115	85.9	3,195	88.1	3,280	65,000	100%
Vihtavuori 20N29	78.4	2,950	80.6	3,025	82.8	3,105	84.9	3,180	87.1	3,260	64,900	100%
Ramshot LRT	75.2	2,925	77.3	2,995	79.4	3,070	81.5	3,145	83.6	3,220	65,000	94%
Accurate MagPro	67.4	2,930	69.3	3,000	71.2	3,070	73.0	3,135	74.9	3,210	64,900	85%
Ramshot Grand	68.6	2,935	70.5	3,005	72.4	3,075	74.3	3,140	76.2	3,210	65,000	86%
Vihtavuori N568	67.2	2,895	69.1	2,970	71.0	3,040	72.8	3,110	74.7	3,180	64,900	85%
Alliant Reloder 33	73.4	2,875	75.4	2,945	77.5	3,015	79.5	3,085	81.5	3,155	65,000	98%
Alliant Reloder 25	65.3	2,885	67.1	2,950	68.9	3,015	70.7	3,080	72.5	3,145	64,900	87%
IMR 8133	68.1	2,865	70.0	2,935	71.9	3,000	73.8	3,070	75.7	3,140	64,900	87%
Alliant Reloder 50	69.9	2,825	71.9	2,900	73.8	2,975	75.8	3,050	77.7	3,125	65,000	96%
Hodgdon H1000	64.5	2,850	66.3	2,915	68.1	2,980	69.9	3,045	71.7	3,110	64,800	86%
Reload Swiss RS76	67.3	2,850	69.2	2,915	71.0	2,975	72.9	3,045	74.8	3,110	64,900	83%
IMR 7977	64.9	2,830	66.7	2,895	68.5	2,955	70.3	3,020	72.1	3,085	64,900	87%
Winchester StaBALL HD	67.1	2,820	69.0	2,885	70.8	2,950	72.7	3,015	74.6	3,085	64,900	84%
Hodgdon Retumbo	64.6	2,810	66.4	2,875	68.2	2,940	70.0	3,005	71.8	3,065	64,800	83%
Vihtavuori 24N41	68.6	2,785	70.5	2,855	72.4	2,920	74.3	2,990	76.2	3,055	64,800	86%
Hodgdon H50BMG	72.7	2,775	74.7	2,840	76.8	2,910	78.8	2,980	80.8	3,045	64,800	91%
Vihtavuori N170	62.8	2,705	64.5	2,760	66.3	2,820	68.0	2,875	69.8	2,935	64,900	80%

153 gr Bullet · 25" barrel

COAL: 3.300" • Bullet length: 1.500" • Seat depth: 0.790" • Usable capacity: 88.5 / 98.7 gr H_2O

Powder	STEP 1 · 90%		STEP 2		STEP 3		STEP 4		STEP 5 · LIMIT			
	gr	fps	gr	fps	gr	fps	gr	fps	gr	fps	psi	Fill
Reload Swiss RS80	72.5	2,885	74.5	2,955	76.5	3,030	78.5	3,105	80.5	3,180	65,000	91%
Hodgdon US 869	77.0	2,865	79.1	2,935	81.3	3,015	83.4	3,090	85.5	3,165	64,900	99%
Ramshot Magnum	68.4	2,875	70.3	2,945	72.2	3,015	74.1	3,080	76.0	3,150	65,000	86%
Vihtavuori 20N29	75.4	2,845	77.5	2,915	79.6	2,990	81.7	3,060	83.8	3,135	64,900	98%
Ramshot LRT	72.7	2,810	74.7	2,875	76.8	2,950	78.8	3,015	80.8	3,085	64,800	93%
Accurate MagPro	65.3	2,815	67.1	2,880	68.9	2,945	70.7	3,015	72.5	3,080	64,900	84%
Ramshot Grand	66.2	2,805	68.0	2,870	69.9	2,940	71.8	3,005	73.6	3,070	64,800	85%
Vihtavuori N568	64.9	2,795	66.7	2,860	68.5	2,925	70.3	2,990	72.1	3,060	65,000	84%
Alliant Reloder 50	67.7	2,745	69.6	2,815	71.5	2,885	73.3	2,955	75.2	3,030	64,800	95%
Alliant Reloder 33	70.8	2,755	72.8	2,825	74.8	2,890	76.7	2,955	78.7	3,025	64,800	96%
Alliant Reloder 25	63.0	2,760	64.8	2,825	66.5	2,885	68.3	2,950	70.0	3,010	64,900	86%
IMR 8133	65.9	2,750	67.7	2,815	69.6	2,880	71.4	2,945	73.2	3,010	64,800	86%
Hodgdon H1000	62.1	2,725	63.8	2,785	65.5	2,845	67.3	2,905	69.0	2,965	64,900	85%
Reload Swiss RS76	64.9	2,720	66.7	2,780	68.5	2,840	70.3	2,905	72.1	2,965	64,800	82%
IMR 7977	62.6	2,705	64.3	2,765	66.0	2,825	67.8	2,890	69.5	2,950	64,800	85%
Winchester StaBALL HD	64.6	2,690	66.4	2,755	68.2	2,815	70.0	2,880	71.8	2,940	64,800	83%
Vihtavuori 24N41	66.2	2,680	68.0	2,745	69.8	2,805	71.7	2,875	73.5	2,935	64,800	85%
Hodgdon Retumbo	62.1	2,680	63.8	2,740	65.5	2,800	67.3	2,865	69.0	2,925	64,800	81%
Hodgdon H50BMG	70.2	2,665	72.2	2,730	74.1	2,790	76.0	2,855	78.0	2,920	64,800	90%

.260 Remington

The .260 Remington began as the 6.5-08. This wildcat was made by necking down the .308 Winchester case to accept .264-inch bullets. A-Square submitted an early version of the cartridge to SAAMI. Remington's submission prevailed instead. Remington introduced the .260 Remington commercially in 1997. SAAMI accepted the specifications in 1999. The cartridge retains the .308 Winchester's 20-degree shoulder and fits short-action rifles.

Typical factory loads drive 120-grain bullets at about 2,890 fps and 140-grain bullets at about 2,750 fps. The cartridge gained a following in metallic silhouette and long-range target shooting. In those games 6.5mm bullets with high ballistic coefficients offer reduced wind drift with modest recoil. It has also been chambered in tactical and AR-10-type rifles. Hunters use it for deer, pronghorn and other medium game. The .260 Remington has become less common since the arrival of the 6.5 Creedmoor. Brass is still easily formed from .308 Winchester cases.

Cartridge specifications	
Bullet Diameter	**0.264" (6.71 mm)**
Max Case Length	**2.035" (51.69 mm)**
Case Trim Length	**2.025" (51.44 mm)**
Max COAL	**2.800" (71.12 mm)**
Primer Pocket	**Large Rifle**
Standard Twist	**1:8"**
Case Capacity	**53.5 gr H_2O**
Max Pressure	**60,000 psi (SAAMI)**

100 gr Bullet · 25" barrel

COAL: 2.717" • Bullet length: 1.051" • Seat depth: 0.369" • Usable capacity: 48.7 / 53.5 gr H_2O

Powder	STEP 1 · 90%		STEP 2		STEP 3		STEP 4		STEP 5 · LIMIT			
	gr	fps	gr	fps	gr	fps	gr	fps	gr	fps	psi	Fill
Hodgdon Leverevolution	40.7	3,085	41.8	3,150	43.0	3,225	44.1	3,295	45.2	3,360	60,000	89%
Hodgdon H4350	44.0	3,025	45.2	3,100	46.5	3,180	47.7	3,255	48.9	3,330	59,800	101%
Winchester StaBALL 6.5	44.5	3,025	45.7	3,095	47.0	3,175	48.2	3,245	49.4	3,320	59,700	102%
Vihtavuori N550	42.4	3,040	43.6	3,110	44.8	3,180	45.9	3,245	47.1	3,315	59,900	102%
Hodgdon Benchmark	37.5	3,035	38.5	3,095	39.6	3,160	40.7	3,230	41.7	3,295	59,800	94%
Alliant Power Pro 2000-MR	41.5	3,005	42.6	3,070	43.8	3,145	45.0	3,220	46.1	3,285	60,000	100%
Hodgdon CFE 223	40.7	3,015	41.8	3,080	43.0	3,150	44.1	3,220	45.2	3,285	59,800	95%
Hodgdon H380	41.9	2,985	43.1	3,060	44.3	3,130	45.4	3,195	46.6	3,270	59,900	102%
Accurate 4350	43.8	2,960	45.0	3,030	46.3	3,110	47.5	3,185	48.7	3,260	59,700	105%
Alliant Reloder 15	39.1	2,995	40.2	3,060	41.3	3,125	42.3	3,185	43.4	3,255	60,000	95%
Winchester 760	42.9	2,960	44.1	3,030	45.3	3,105	46.5	3,175	47.7	3,250	59,800	101%
Vihtavuori N540	39.0	2,985	40.1	3,050	41.1	3,110	42.2	3,175	43.3	3,240	60,000	94%
Alliant Power Pro 4000-MR	44.6	2,920	45.9	3,000	47.1	3,070	48.4	3,150	49.6	3,225	59,900	104%
Reload Swiss RS50	40.1	2,955	41.2	3,020	42.4	3,090	43.5	3,155	44.6	3,225	59,800	96%
Vihtavuori N150	38.9	2,955	40.0	3,025	41.0	3,085	42.1	3,150	43.2	3,220	59,800	100%
Hodgdon Varget	38.1	2,955	39.1	3,020	40.2	3,085	41.3	3,155	42.3	3,215	59,800	90%
IMR 4064	38.1	2,960	39.1	3,020	40.2	3,085	41.3	3,150	42.3	3,215	59,700	93%
Accurate 2700	41.9	2,925	43.0	2,990	44.2	3,060	45.4	3,135	46.5	3,200	59,900	97%
Winchester StaBALL Match	38.5	2,920	39.6	2,985	40.6	3,045	41.7	3,110	42.8	3,180	60,000	99%
Vihtavuori N140	37.7	2,900	38.8	2,970	39.8	3,030	40.9	3,095	41.9	3,155	59,700	88%

120 gr Bullet · 25" barrel

COAL: 2.720" • Bullet length: 1.247" • Seat depth: 0.562" • Usable capacity: 46.1 / 53.5 gr H_2O

Powder	STEP 1 · 90%		STEP 2		STEP 3		STEP 4		STEP 5 · LIMIT			
	gr	fps	gr	fps	gr	fps	gr	fps	gr	fps	psi	Fill
Hodgdon H4350	40.6	2,780	41.7	2,845	42.9	2,915	44.0	2,980	45.1	3,045	59,900	99%
Hodgdon Leverevolution	37.5	2,780	38.5	2,840	39.6	2,905	40.7	2,975	41.7	3,035	60,000	86%
Winchester StaBALL 6.5	41.3	2,760	42.4	2,825	43.6	2,895	44.8	2,965	45.9	3,025	59,700	100%
Alliant Reloder 17	39.6	2,745	40.7	2,810	41.8	2,880	42.9	2,945	44.0	3,015	59,700	96%
Hodgdon H414	40.2	2,740	41.3	2,805	42.5	2,875	43.6	2,940	44.7	3,005	59,900	99%
IMR 4350	40.5	2,740	41.6	2,805	42.8	2,875	43.9	2,940	45.0	3,005	59,500	105%
Accurate 4350	40.8	2,730	41.9	2,795	43.0	2,860	44.2	2,930	45.3	2,995	59,800	103%
Winchester 760	39.9	2,715	41.0	2,780	42.1	2,845	43.2	2,905	44.3	2,975	59,800	99%
Vihtavuori N550	38.5	2,725	39.6	2,790	40.6	2,845	41.7	2,910	42.8	2,970	59,800	98%
Hodgdon CFE 223	37.5	2,715	38.5	2,775	39.6	2,840	40.7	2,905	41.7	2,965	59,900	92%
Ramshot Hunter	41.0	2,690	42.1	2,755	43.3	2,825	44.4	2,885	45.5	2,950	58,300	105%
IMR 4451	39.4	2,660	40.5	2,725	41.6	2,790	42.7	2,855	43.8	2,920	59,800	99%
Alliant Reloder 15	35.6	2,680	36.6	2,740	37.6	2,800	38.6	2,860	39.6	2,915	59,900	92%
Ramshot Big Game	38.3	2,670	39.3	2,730	40.4	2,795	41.5	2,855	42.5	2,915	59,700	94%
Reload Swiss RS50	37.2	2,675	38.2	2,730	39.3	2,795	40.3	2,855	41.3	2,915	59,900	94%
IMR 7828	43.2	2,625	44.4	2,695	45.6	2,765	46.8	2,835	48.0	2,905	57,600	105%
Hodgdon Varget	35.0	2,665	36.0	2,725	37.0	2,785	37.9	2,840	38.9	2,900	59,900	88%
Shooters World The Creed	36.0	2,660	37.0	2,720	38.0	2,780	39.0	2,840	40.0	2,900	60,000	90%
Vihtavuori N540	35.4	2,660	36.4	2,715	37.3	2,770	38.3	2,825	39.3	2,885	59,600	91%
Vihtavuori N140	34.5	2,600	35.5	2,660	36.4	2,715	37.3	2,770	38.3	2,830	59,800	85%

130 gr Bullet · 25" barrel

COAL: 2.705" • Bullet length: 1.320" • Seat depth: 0.650" • Usable capacity: 45.0 / 53.5 gr H_2O

Powder	STEP 1 · 90%		STEP 2		STEP 3		STEP 4		STEP 5 · LIMIT			
	gr	fps	gr	fps	gr	fps	gr	fps	gr	fps	psi	Fill
Hodgdon H4350	39.1	2,665	40.2	2,730	41.3	2,795	42.3	2,855	43.4	2,920	59,800	97%
Winchester StaBALL 6.5	40.0	2,650	41.1	2,715	42.2	2,775	43.3	2,840	44.4	2,900	59,800	100%
Alliant Reloder 17	38.3	2,640	39.4	2,705	40.5	2,770	41.5	2,830	42.6	2,895	59,800	95%
Norma URP	38.5	2,635	39.6	2,705	40.6	2,765	41.7	2,830	42.8	2,895	59,800	104%
IMR 4350	39.2	2,640	40.3	2,700	41.4	2,765	42.4	2,825	43.5	2,890	59,900	104%
Hodgdon Leverevolution	36.1	2,650	37.1	2,710	38.1	2,770	39.1	2,830	40.1	2,885	59,800	85%
Accurate 4350	39.4	2,625	40.5	2,685	41.6	2,750	42.7	2,815	43.8	2,880	59,800	102%
Reload Swiss RS70	41.7	2,610	42.9	2,680	44.0	2,745	45.1	2,810	46.3	2,880	59,700	104%
Hodgdon SUPERFORMANCE	40.8	2,615	41.9	2,675	43.0	2,740	44.2	2,810	45.3	2,875	60,000	99%
Hodgdon H4831SC	41.4	2,590	42.5	2,650	43.7	2,720	44.9	2,790	46.0	2,855	59,700	103%
IMR 7828	42.2	2,570	43.4	2,635	44.5	2,700	45.7	2,770	46.9	2,840	59,600	105%
Alliant Reloder 16	37.6	2,595	38.6	2,650	39.7	2,715	40.8	2,775	41.8	2,835	60,000	103%
Hodgdon H380	37.3	2,595	38.3	2,650	39.3	2,710	40.4	2,770	41.4	2,830	59,900	98%
Vihtavuori N550	36.9	2,595	37.9	2,650	39.0	2,715	40.0	2,770	41.0	2,825	59,900	96%
Hodgdon CFE 223	36.1	2,585	37.1	2,645	38.1	2,705	39.1	2,760	40.1	2,820	59,700	91%
Accurate 2700	37.5	2,555	38.5	2,610	39.6	2,675	40.7	2,740	41.7	2,795	59,700	94%
Reload Swiss RS50	35.8	2,545	36.8	2,605	37.8	2,660	38.8	2,720	39.8	2,775	59,700	93%
Alliant Reloder 15	34.1	2,550	35.0	2,600	36.0	2,660	37.0	2,715	37.9	2,770	59,600	90%
Hodgdon Varget	33.7	2,540	34.6	2,595	35.5	2,650	36.5	2,710	37.4	2,760	59,900	87%
Vihtavuori N540	33.9	2,520	34.9	2,580	35.8	2,630	36.8	2,685	37.7	2,740	59,900	89%

140 gr Bullet · 25" barrel

COAL: 2.736" • Bullet length: 1.360" • Seat depth: 0.659" • Usable capacity: 44.8 / 53.5 gr H_2O

Powder	STEP 1 · 90%		STEP 2		STEP 3		STEP 4		STEP 5 · LIMIT			
	gr	fps	gr	fps	gr	fps	gr	fps	gr	fps	psi	Fill
Vihtavuori N555	39.4	2,570	40.5	2,630	41.6	2,690	42.7	2,755	43.8	2,815	59,800	105%
Hodgdon H4350	38.1	2,570	39.1	2,625	40.2	2,690	41.3	2,750	42.3	2,810	59,700	95%
Norma URP	37.7	2,560	38.8	2,625	39.8	2,680	40.9	2,745	41.9	2,805	59,800	103%
Alliant Reloder 17	37.6	2,555	38.6	2,615	39.7	2,680	40.8	2,740	41.8	2,800	59,800	94%
Reload Swiss RS70	41.0	2,540	42.1	2,605	43.3	2,670	44.4	2,735	45.5	2,795	59,800	102%
Winchester StaBALL 6.5	39.1	2,555	40.2	2,615	41.3	2,675	42.3	2,730	43.4	2,790	59,700	98%
IMR 4831	39.4	2,530	40.5	2,590	41.6	2,655	42.7	2,720	43.8	2,785	57,100	105%
IMR 4955	40.1	2,535	41.2	2,600	42.3	2,660	43.4	2,725	44.5	2,785	59,700	100%
Accurate 4350	38.6	2,540	39.7	2,600	40.8	2,660	41.8	2,720	42.9	2,780	59,900	100%
IMR 4350	38.2	2,540	39.3	2,605	40.3	2,660	41.4	2,720	42.4	2,780	59,800	102%
Norma MRP	40.7	2,520	41.8	2,580	43.0	2,645	44.1	2,705	45.2	2,770	59,500	105%
Ramshot Hunter	39.2	2,520	40.3	2,580	41.4	2,645	42.5	2,705	43.6	2,770	59,900	103%
Alliant Power Pro 4000-MR	39.5	2,515	40.6	2,575	41.7	2,635	42.8	2,700	43.9	2,760	59,800	100%
Reload Swiss RS62	39.2	2,510	40.3	2,575	41.4	2,635	42.4	2,695	43.5	2,760	59,700	101%
IMR 7828SSC	40.7	2,500	41.8	2,565	43.0	2,630	44.1	2,690	45.2	2,750	57,600	105%
IMR 4007 SSC	37.0	2,485	38.0	2,545	39.0	2,600	40.1	2,665	41.1	2,720	60,000	98%
Alliant Reloder 16	36.5	2,490	37.5	2,545	38.5	2,600	39.6	2,660	40.6	2,715	59,800	101%
Vihtavuori N160	38.5	2,475	39.6	2,535	40.6	2,590	41.7	2,650	42.8	2,710	59,800	104%
Vihtavuori N550	35.6	2,475	36.6	2,530	37.6	2,585	38.6	2,640	39.6	2,690	59,700	93%
Ramshot Big Game	36.0	2,455	37.0	2,510	38.0	2,565	39.0	2,620	40.0	2,675	59,700	91%

150 gr Bullet · 25" barrel

COAL: 2.800" • Bullet length: 1.459" • Seat depth: 0.694" • Usable capacity: 44.4 / 53.5 gr H_2O

Powder	STEP 1 · 90%		STEP 2		STEP 3		STEP 4		STEP 5 · LIMIT			
	gr	fps	gr	fps	gr	fps	gr	fps	gr	fps	psi	Fill
Alliant Reloder 26	41.7	2,510	42.9	2,575	44.0	2,635	45.1	2,700	46.3	2,765	58,200	105%
IMR 4831	39.0	2,475	40.1	2,540	41.1	2,595	42.2	2,660	43.3	2,720	58,500	105%
Norma URP	36.8	2,480	37.8	2,535	38.8	2,595	39.9	2,655	40.9	2,715	59,900	101%
Alliant Reloder 19	39.4	2,460	40.5	2,520	41.6	2,585	42.7	2,645	43.8	2,710	56,600	105%
Reload Swiss RS70	40.1	2,465	41.2	2,525	42.3	2,585	43.4	2,650	44.5	2,710	59,700	101%
Vihtavuori N555	38.2	2,480	39.3	2,540	40.3	2,595	41.4	2,655	42.4	2,710	59,700	103%
Hodgdon H4350	37.1	2,475	38.1	2,530	39.2	2,595	40.2	2,650	41.2	2,705	60,000	94%
Hodgdon Hybrid 100V	37.3	2,470	38.3	2,525	39.3	2,585	40.4	2,650	41.4	2,705	59,700	105%
IMR 4955	39.2	2,455	40.3	2,515	41.4	2,580	42.5	2,640	43.6	2,700	59,900	99%
Hodgdon SUPERFORMANCE	39.1	2,455	40.2	2,515	41.3	2,575	42.3	2,630	43.4	2,690	59,900	96%
Winchester StaBALL 6.5	38.2	2,460	39.3	2,520	40.3	2,575	41.4	2,635	42.4	2,690	60,000	96%
Hodgdon H4831SC	39.8	2,440	40.9	2,500	42.0	2,560	43.1	2,620	44.2	2,680	59,800	100%
IMR 4350	37.1	2,445	38.1	2,500	39.2	2,560	40.2	2,615	41.2	2,670	59,700	100%
Ramshot Hunter	38.3	2,435	39.4	2,495	40.5	2,555	41.5	2,610	42.6	2,670	59,900	102%
Winchester Supreme 780	41.6	2,420	42.8	2,485	43.9	2,545	45.1	2,610	46.2	2,670	58,900	105%
IMR 7828	40.2	2,420	41.3	2,480	42.5	2,545	43.6	2,605	44.7	2,665	59,700	101%
Vihtavuori N560	40.1	2,425	41.2	2,480	42.3	2,540	43.4	2,595	44.5	2,650	58,700	105%
Winchester 760	36.8	2,420	37.8	2,475	38.8	2,530	39.9	2,595	40.9	2,650	59,900	95%
IMR 4451	36.5	2,390	37.5	2,445	38.5	2,500	39.6	2,565	40.6	2,620	59,900	95%
Alliant Reloder 16	35.5	2,390	36.5	2,445	37.5	2,500	38.4	2,550	39.4	2,605	59,800	99%

.264 Winchester Magnum

Winchester announced the .264 Winchester Magnum in 1958 for its Model 70 Westerner bolt-action rifle. The Westerner had a 26-inch barrel. Rifles reached dealers in 1960. The .264 was one of Winchester's short belted magnums. It was based on the .375 H&H Magnum case shortened to fit standard-length actions and necked down to hold .264-inch (6.5mm) bullets. Winchester intended it as a flat-shooting cartridge for long shots in open western country.

Winchester advertised a 140-grain bullet at 3,200 fps from the 26-inch barrel. Actual velocities were somewhat lower. With the barrel steels of the period the cartridge gained a reputation for rapid throat erosion. The 7mm Remington Magnum was introduced in 1962 and soon overtook it in popularity. Factory rifles and ammunition are still offered. Most of the ammunition uses 140-grain bullets. Modern high-ballistic-coefficient 6.5mm bullets have renewed some interest among handloaders.

Cartridge specifications	
Bullet Diameter	**0.264" (6.71 mm)**
Max Case Length	**2.500" (63.50 mm)**
Case Trim Length	**2.490" (63.25 mm)**
Max COAL	**3.340" (84.84 mm)**
Primer Pocket	**Large Rifle**
Standard Twist	**1:9"**
Case Capacity	**82.7 gr H_2O**
Max Pressure	**64,000 psi (SAAMI)**

100 gr Bullet · 25" barrel

COAL: 3.160" • Bullet length: 1.049" • Seat depth: 0.389" • Usable capacity: 77.6 / 82.7 gr H_2O

Powder	STEP 1 · 90%		STEP 2		STEP 3		STEP 4		STEP 5 · LIMIT			
	gr	fps	gr	fps	gr	fps	gr	fps	gr	fps	psi	Fill
Alliant Reloder 26	62.9	3,295	64.7	3,380	66.4	3,455	68.2	3,540	69.9	3,615	63,900	90%
IMR 4350	57.8	3,300	59.4	3,370	61.0	3,445	62.6	3,520	64.2	3,595	63,800	89%
Hodgdon Hybrid 100V	56.7	3,285	58.3	3,360	59.9	3,435	61.4	3,505	63.0	3,585	63,900	91%
Hodgdon H4831SC	61.1	3,265	62.8	3,340	64.5	3,420	66.2	3,495	67.9	3,575	64,000	88%
Accurate MagPro	65.4	3,235	67.2	3,315	69.1	3,400	70.9	3,485	72.7	3,570	64,000	96%
Alliant Reloder 23	59.3	3,270	61.0	3,345	62.6	3,420	64.3	3,495	65.9	3,570	63,900	92%
Hodgdon SUPERFORMANCE	58.8	3,240	60.4	3,320	62.0	3,395	63.7	3,475	65.3	3,550	63,800	82%
Hodgdon H4350	56.2	3,255	57.8	3,330	59.3	3,400	60.9	3,475	62.4	3,545	63,900	81%
Alliant Reloder 22	60.1	3,235	61.8	3,310	63.5	3,390	65.1	3,465	66.8	3,540	64,000	91%
Alliant Reloder 19	59.4	3,225	61.0	3,300	62.7	3,380	64.3	3,455	66.0	3,535	63,800	90%
IMR 7828	62.1	3,220	63.8	3,295	65.5	3,375	67.3	3,455	69.0	3,535	63,800	89%
Hodgdon H1000	63.5	3,190	65.3	3,270	67.0	3,350	68.8	3,430	70.6	3,510	64,000	99%
Hodgdon Retumbo	64.5	3,185	66.3	3,265	68.1	3,345	69.9	3,425	71.7	3,505	63,800	96%
IMR 4831	57.2	3,190	58.8	3,265	60.4	3,340	62.0	3,415	63.6	3,495	63,900	88%
Ramshot Magnum	65.9	3,165	67.7	3,245	69.6	3,330	71.4	3,410	73.2	3,490	63,900	95%
Winchester Supreme 780	62.6	3,170	64.3	3,245	66.0	3,320	67.8	3,405	69.5	3,480	64,000	90%
Winchester StaBALL HD	65.6	3,130	67.4	3,210	69.3	3,290	71.1	3,370	72.9	3,450	64,000	96%
IMR 8133	65.3	3,105	67.1	3,190	68.9	3,270	70.8	3,355	72.6	3,440	63,800	97%
Vihtavuori N170	63.7	3,150	65.5	3,225	67.3	3,295	69.0	3,365	70.8	3,440	63,800	95%
Vihtavuori N165	59.8	3,135	61.5	3,210	63.1	3,280	64.8	3,350	66.4	3,420	63,800	92%

107 gr Bullet · 25" barrel

COAL: 3.300" • Bullet length: 1.238" • Seat depth: 0.438" • Usable capacity: 77.1 / 82.7 gr H_2O

Powder	STEP 1 · 90%		STEP 2		STEP 3		STEP 4		STEP 5 · LIMIT			
	gr	fps	gr	fps	gr	fps	gr	fps	gr	fps	psi	Fill
Alliant Reloder 26	61.7	3,215	63.4	3,290	65.1	3,365	66.8	3,440	68.5	3,520	63,800	89%
Accurate MagPro	64.4	3,165	66.2	3,245	68.0	3,325	69.7	3,400	71.5	3,485	63,800	95%
Hodgdon Hybrid 100V	55.7	3,195	57.3	3,265	58.8	3,340	60.4	3,415	61.9	3,485	63,800	90%
IMR 4350	56.5	3,200	58.1	3,270	59.6	3,335	61.2	3,410	62.8	3,480	64,000	87%
Hodgdon H4831SC	59.9	3,175	61.6	3,250	63.3	3,325	64.9	3,395	66.6	3,475	64,000	87%
Alliant Reloder 23	58.1	3,175	59.7	3,245	61.3	3,315	62.9	3,390	64.5	3,460	63,800	91%
Vihtavuori N570	64.4	3,135	66.2	3,215	68.0	3,295	69.8	3,380	71.6	3,460	63,800	96%
Alliant Reloder 19	58.4	3,150	60.0	3,220	61.7	3,300	63.3	3,375	64.9	3,450	64,000	89%
Reload Swiss RS76	64.9	3,135	66.7	3,215	68.5	3,290	70.3	3,365	72.1	3,445	63,800	94%
Alliant Reloder 22	58.9	3,150	60.5	3,220	62.2	3,295	63.8	3,370	65.4	3,440	63,800	90%
Hodgdon H1000	62.4	3,120	64.1	3,195	65.8	3,265	67.6	3,345	69.3	3,425	63,900	98%
Hodgdon H4831	59.2	3,120	60.9	3,195	62.5	3,265	64.2	3,340	65.8	3,415	63,800	92%
IMR 7828SSC	59.4	3,120	61.0	3,190	62.7	3,270	64.3	3,340	66.0	3,415	63,900	89%
Ramshot Magnum	64.8	3,100	66.6	3,175	68.4	3,255	70.2	3,335	72.0	3,410	63,900	94%
Vihtavuori N560	59.3	3,125	61.0	3,200	62.6	3,265	64.3	3,335	65.9	3,405	64,000	89%
Ramshot Grand	62.9	3,080	64.7	3,160	66.4	3,230	68.2	3,310	69.9	3,385	63,800	92%
Winchester StaBALL HD	64.4	3,055	66.2	3,130	68.0	3,210	69.8	3,285	71.6	3,365	63,900	95%
Accurate 3100	57.9	3,060	59.5	3,135	61.1	3,205	62.7	3,280	64.3	3,350	63,800	91%
Hodgdon H50BMG	71.0	3,010	73.0	3,090	75.0	3,175	76.9	3,255	78.9	3,340	63,900	104%
Vihtavuori N170	62.3	3,055	64.0	3,125	65.8	3,195	67.5	3,265	69.2	3,335	63,900	93%

120 gr Bullet · 25" barrel

COAL: 3.160" • Bullet length: 1.236" • Seat depth: 0.576" • Usable capacity: 75.0 / 82.7 gr H_2O

Powder	STEP 1 · 90%		STEP 2		STEP 3		STEP 4		STEP 5 · LIMIT			
	gr	fps	gr	fps	gr	fps	gr	fps	gr	fps	psi	Fill
Alliant Reloder 26	59.0	3,055	60.6	3,120	62.3	3,195	63.9	3,265	65.6	3,340	64,000	88%
Accurate MagPro	62.0	3,025	63.7	3,100	65.5	3,180	67.2	3,255	68.9	3,330	63,900	94%
Hodgdon Hybrid 100V	53.6	3,035	55.1	3,100	56.5	3,165	58.0	3,235	59.5	3,305	63,900	89%
Ramshot LRT	68.9	2,980	70.8	3,060	72.8	3,145	74.7	3,225	76.6	3,305	63,900	104%
Vihtavuori N570	61.5	3,010	63.2	3,085	64.9	3,155	66.6	3,230	68.3	3,305	63,800	94%
Alliant Reloder 25	60.3	3,000	62.0	3,075	63.6	3,145	65.3	3,215	67.0	3,295	64,000	97%
Hodgdon H4831SC	57.4	3,015	59.0	3,080	60.6	3,150	62.2	3,220	63.8	3,295	64,000	86%
IMR 4350	53.8	3,015	55.3	3,080	56.8	3,150	58.3	3,215	59.8	3,280	63,900	86%
Alliant Reloder 19	56.0	3,000	57.5	3,065	59.1	3,140	60.7	3,210	62.2	3,275	63,800	88%
Reload Swiss RS76	62.4	2,985	64.1	3,055	65.8	3,125	67.6	3,200	69.3	3,275	63,800	93%
Alliant Reloder 22	56.3	2,990	57.9	3,060	59.5	3,130	61.0	3,195	62.6	3,265	63,900	89%
IMR 7828	58.1	2,990	59.7	3,060	61.3	3,125	62.9	3,195	64.5	3,265	63,900	86%
Ramshot Magnum	62.3	2,965	64.0	3,040	65.8	3,115	67.5	3,190	69.2	3,260	63,800	93%
Vihtavuori N568	62.0	2,925	63.7	3,000	65.5	3,080	67.2	3,160	68.9	3,235	64,000	95%
IMR 4831	54.0	2,960	55.5	3,025	57.0	3,095	58.5	3,165	60.0	3,230	63,800	86%
Ramshot Grand	60.6	2,945	62.3	3,015	64.0	3,090	65.6	3,155	67.3	3,230	63,800	91%
Vihtavuori N565	57.9	2,945	59.5	3,010	61.1	3,080	62.7	3,145	64.3	3,215	64,000	90%
Winchester StaBALL HD	61.9	2,920	63.6	2,990	65.3	3,060	67.1	3,135	68.8	3,205	63,800	93%
Hodgdon H50BMG	68.4	2,890	70.3	2,970	72.2	3,045	74.1	3,125	76.0	3,200	63,900	103%
Alliant Reloder 33	65.3	2,865	67.1	2,940	68.9	3,015	70.8	3,095	72.6	3,170	60,500	105%

130 gr Bullet · 25" barrel

COAL: 3.200" • Bullet length: 1.329" • Seat depth: 0.628" • Usable capacity: 74.4 / 82.7 gr H_2O

Powder	STEP 1 · 90%		STEP 2		STEP 3		STEP 4		STEP 5 · LIMIT			
	gr	fps	gr	fps	gr	fps	gr	fps	gr	fps	psi	Fill
Accurate MagPro	60.8	2,940	62.5	3,010	64.2	3,085	65.8	3,155	67.5	3,225	63,900	93%
Alliant Reloder 26	57.4	2,940	59.0	3,010	60.6	3,080	62.2	3,145	63.8	3,215	63,900	86%
Ramshot LRT	67.6	2,905	69.5	2,980	71.3	3,050	73.2	3,130	75.1	3,210	63,900	103%
Vihtavuori N570	59.6	2,910	61.3	2,985	62.9	3,050	64.5	3,115	66.2	3,190	63,800	92%
Alliant Reloder 25	59.0	2,905	60.6	2,975	62.3	3,045	63.9	3,115	65.5	3,185	64,000	96%
Hodgdon Hybrid 100V	52.3	2,920	53.8	2,985	55.2	3,050	56.6	3,110	58.1	3,180	63,800	88%
Alliant Reloder 19	54.6	2,895	56.1	2,960	57.7	3,030	59.2	3,095	60.7	3,165	63,800	87%
Hodgdon H4831SC	55.9	2,900	57.5	2,965	59.0	3,030	60.5	3,095	62.1	3,165	63,800	84%
Ramshot Magnum	60.9	2,880	62.6	2,950	64.3	3,020	66.0	3,090	67.7	3,165	63,800	91%
Reload Swiss RS76	60.9	2,880	62.6	2,950	64.3	3,020	66.0	3,085	67.7	3,155	63,900	92%
Vihtavuori N568	60.6	2,855	62.3	2,930	64.0	3,005	65.6	3,075	67.3	3,150	63,800	94%
Hodgdon H1000	58.4	2,875	60.0	2,940	61.7	3,010	63.3	3,080	64.9	3,145	64,000	95%
IMR 4350	52.3	2,895	53.8	2,960	55.2	3,020	56.6	3,080	58.1	3,145	64,000	84%
Alliant Reloder 22	54.8	2,880	56.3	2,945	57.8	3,010	59.4	3,075	60.9	3,140	63,900	87%
Hodgdon Retumbo	59.4	2,865	61.0	2,930	62.7	3,000	64.3	3,065	66.0	3,135	63,800	92%
IMR 8133	60.7	2,840	62.4	2,910	64.1	2,985	65.7	3,050	67.4	3,125	63,900	94%
IMR 4831	52.7	2,855	54.2	2,920	55.7	2,985	57.1	3,050	58.6	3,115	63,800	85%
Alliant Reloder 33	64.7	2,820	66.5	2,890	68.3	2,960	70.1	3,035	71.9	3,110	62,500	105%
Hodgdon H50BMG	67.0	2,815	68.8	2,885	70.7	2,960	72.6	3,035	74.4	3,110	63,900	102%
Hodgdon US 869	68.3	2,780	70.2	2,855	72.1	2,935	74.0	3,015	75.9	3,095	61,000	105%

140 gr Bullet · 25" barrel

COAL: 3.210" • Bullet length: 1.375" • Seat depth: 0.665" • Usable capacity: 73.9 / 82.7 gr H_2O

Powder	STEP 1 · 90%		STEP 2		STEP 3		STEP 4		STEP 5 · LIMIT			
	gr	fps	gr	fps	gr	fps	gr	fps	gr	fps	psi	Fill
Accurate MagPro	59.6	2,850	61.3	2,920	62.9	2,990	64.5	3,055	66.2	3,130	63,900	91%
Ramshot LRT	66.3	2,825	68.2	2,895	70.0	2,970	71.8	3,040	73.7	3,120	63,900	102%
Alliant Reloder 26	55.9	2,835	57.5	2,905	59.0	2,965	60.5	3,030	62.1	3,095	63,900	84%
Alliant Reloder 25	57.7	2,810	59.3	2,880	60.9	2,945	62.5	3,010	64.1	3,075	63,800	95%
Vihtavuori N568	59.4	2,790	61.0	2,860	62.7	2,930	64.3	3,000	66.0	3,075	64,000	92%
Vihtavuori N570	57.8	2,815	59.4	2,880	61.0	2,945	62.6	3,010	64.2	3,075	64,000	89%
Hodgdon Hybrid 100V	51.2	2,815	52.6	2,880	54.0	2,940	55.5	3,005	56.9	3,065	63,800	86%
Ramshot Magnum	59.7	2,795	61.4	2,865	63.0	2,930	64.7	3,000	66.3	3,065	63,800	90%
Alliant Reloder 19	53.5	2,805	55.0	2,870	56.5	2,935	57.9	2,995	59.4	3,060	63,900	85%
Hodgdon US 869	67.9	2,750	69.8	2,830	71.7	2,905	73.5	2,980	75.4	3,060	62,700	105%
Hodgdon H4831SC	54.5	2,790	56.0	2,855	57.5	2,920	59.1	2,985	60.6	3,050	63,800	83%
Reload Swiss RS76	59.7	2,790	61.4	2,855	63.0	2,920	64.7	2,985	66.3	3,050	63,900	90%
Alliant Reloder 33	64.0	2,760	65.8	2,830	67.5	2,900	69.3	2,970	71.1	3,045	63,900	104%
Hodgdon H1000	57.1	2,780	58.7	2,845	60.3	2,910	61.8	2,975	63.4	3,040	63,900	93%
Hodgdon Retumbo	58.1	2,770	59.7	2,835	61.3	2,900	63.0	2,970	64.6	3,035	64,000	91%
IMR 8133	59.5	2,760	61.1	2,825	62.8	2,895	64.4	2,960	66.1	3,030	63,900	93%
Alliant Reloder 22	53.4	2,775	54.9	2,840	56.3	2,900	57.8	2,960	59.3	3,025	63,800	85%
Hodgdon H50BMG	65.7	2,735	67.5	2,805	69.3	2,875	71.2	2,950	73.0	3,020	64,000	101%
IMR 7828SSC	53.6	2,750	55.1	2,815	56.6	2,875	58.1	2,935	59.6	3,000	63,800	84%
Winchester StaBALL HD	59.2	2,735	60.9	2,800	62.5	2,865	64.2	2,935	65.8	2,995	64,000	91%

150 gr Bullet · 25" barrel

COAL: 3.320" • Bullet length: 1.434" • Seat depth: 0.614" • Usable capacity: 74.7 / 82.7 gr H_2O

Powder	STEP 1 · 90%		STEP 2		STEP 3		STEP 4		STEP 5 · LIMIT			
	gr	fps	gr	fps	gr	fps	gr	fps	gr	fps	psi	Fill
Accurate MagPro	59.0	2,775	60.6	2,840	62.3	2,910	63.9	2,975	65.6	3,045	63,900	90%
Ramshot LRT	65.8	2,755	67.6	2,825	69.4	2,895	71.3	2,970	73.1	3,040	64,000	100%
Hodgdon US 869	68.0	2,725	69.9	2,800	71.8	2,875	73.6	2,945	75.5	3,025	64,000	104%
Vihtavuori N568	58.7	2,730	60.3	2,795	62.0	2,865	63.6	2,930	65.2	2,995	63,800	90%
Alliant Reloder 25	57.2	2,735	58.8	2,800	60.4	2,865	61.9	2,925	63.5	2,990	64,000	93%
Alliant Reloder 26	54.9	2,735	56.4	2,800	58.0	2,865	59.5	2,925	61.0	2,985	63,800	82%
Ramshot Magnum	59.0	2,720	60.6	2,785	62.3	2,850	63.9	2,915	65.6	2,985	63,900	88%
Alliant Reloder 50	62.1	2,690	63.8	2,760	65.5	2,835	67.3	2,910	69.0	2,980	64,000	104%
Alliant Reloder 33	63.5	2,695	65.3	2,765	67.0	2,830	68.8	2,900	70.5	2,965	63,900	102%
Reload Swiss RS76	59.0	2,700	60.6	2,765	62.3	2,830	63.9	2,890	65.5	2,950	63,900	88%
IMR 8133	59.0	2,690	60.6	2,755	62.3	2,820	63.9	2,885	65.5	2,945	63,800	91%
Hodgdon H1000	56.3	2,695	57.8	2,755	59.4	2,815	61.0	2,880	62.5	2,940	63,800	91%
Hodgdon H4831SC	53.7	2,700	55.2	2,760	56.7	2,820	58.2	2,880	59.7	2,940	63,800	80%
Hodgdon H50BMG	65.0	2,665	66.8	2,735	68.6	2,800	70.4	2,870	72.2	2,935	63,800	98%
Hodgdon Retumbo	57.2	2,685	58.8	2,745	60.4	2,805	62.0	2,870	63.6	2,930	63,800	89%
IMR 7828SSC	52.8	2,660	54.3	2,720	55.8	2,785	57.2	2,840	58.7	2,900	63,900	82%
Vihtavuori 24N41	59.5	2,615	61.1	2,675	62.8	2,745	64.4	2,805	66.1	2,875	63,800	90%
Norma MRP	52.2	2,635	53.7	2,695	55.1	2,750	56.5	2,810	58.0	2,870	64,000	81%
Vihtavuori N560	51.5	2,605	52.9	2,660	54.4	2,715	55.8	2,770	57.2	2,825	63,800	80%
IMR 7977	54.4	2,585	55.9	2,640	57.4	2,700	58.9	2,760	60.4	2,820	63,900	88%

160 gr Bullet · 25" barrel

COAL: 3.320" • Bullet length: 1.385" • Seat depth: 0.564" • Usable capacity: 75.3 / 82.7 gr H_2O

Powder	STEP 1 · 90%		STEP 2		STEP 3		STEP 4		STEP 5 · LIMIT			
	gr	fps	gr	fps	gr	fps	gr	fps	gr	fps	psi	Fill
Hodgdon US 869	67.3	2,665	69.2	2,735	71.0	2,805	72.9	2,880	74.8	2,955	64,000	102%
Accurate MagPro	58.3	2,690	59.9	2,755	61.5	2,820	63.2	2,885	64.8	2,950	63,900	88%
Ramshot LRT	64.9	2,675	66.7	2,740	68.5	2,810	70.3	2,875	72.1	2,945	63,900	98%
Alliant Reloder 50	61.4	2,640	63.1	2,710	64.8	2,780	66.5	2,850	68.2	2,920	63,900	102%
Vihtavuori N568	57.8	2,655	59.4	2,720	61.0	2,785	62.6	2,850	64.2	2,910	63,900	88%
Alliant Reloder 25	56.3	2,645	57.9	2,705	59.5	2,765	61.0	2,825	62.6	2,890	64,000	91%
Ramshot Magnum	58.1	2,635	59.7	2,695	61.3	2,760	63.0	2,825	64.6	2,890	63,800	86%
Alliant Reloder 33	62.6	2,610	64.3	2,675	66.1	2,740	67.8	2,805	69.6	2,870	63,800	100%
Hodgdon Hybrid 100V	50.0	2,630	51.4	2,690	52.8	2,750	54.1	2,800	55.5	2,860	63,800	83%
Alliant Reloder 19	51.9	2,620	53.4	2,680	54.8	2,740	56.3	2,800	57.7	2,855	63,900	81%
IMR 8133	58.2	2,605	59.8	2,665	61.5	2,730	63.1	2,795	64.7	2,855	63,900	89%
Hodgdon H50BMG	64.1	2,585	65.9	2,650	67.7	2,715	69.4	2,780	71.2	2,845	63,900	96%
Vihtavuori N570	54.6	2,605	56.1	2,665	57.7	2,725	59.2	2,785	60.7	2,845	63,900	83%
Reload Swiss RS76	58.0	2,605	59.6	2,665	61.2	2,720	62.8	2,780	64.4	2,840	63,900	86%
Hodgdon H1000	55.3	2,600	56.8	2,655	58.3	2,715	59.9	2,775	61.4	2,835	63,900	88%
Ramshot Grand	56.7	2,590	58.3	2,655	59.9	2,715	61.4	2,775	63.0	2,835	63,800	85%
Hodgdon Retumbo	56.1	2,585	57.6	2,640	59.2	2,700	60.8	2,765	62.3	2,820	63,800	86%
Alliant Reloder 22	51.4	2,575	52.8	2,630	54.3	2,690	55.7	2,750	57.1	2,805	64,000	81%
Hodgdon H4831	51.8	2,555	53.3	2,615	54.7	2,670	56.1	2,725	57.6	2,785	63,900	82%
Vihtavuori 24N41	58.5	2,540	60.1	2,600	61.8	2,665	63.4	2,725	65.0	2,785	63,800	88%

6.5 Creedmoor

Hornady introduced the 6.5 Creedmoor in 2007. Hornady senior ballistics scientist Dave Emary developed it in partnership with Dennis DeMille of Creedmoor Sports. They designed it primarily for long-range target competition. The case is a necked-down modification of the .30 Thompson/Center. It has a 30-degree shoulder and a 2.825-inch overall length. This length fits short-action rifles while leaving room for long high-ballistic-coefficient bullets. Both SAAMI and C.I.P. have standardized the cartridge.

Common factory loads drive 120-grain bullets at about 3,020 fps and 143-grain bullets at about 2,710 fps. Recoil is moderate. The cartridge became widely used in long-range competition and in medium-game hunting. Its competition use includes the Precision Rifle Series. After testing in 2017 U.S. Special Operations Command selected it for sniper rifles. Other U.S. and British military units have since adopted it. Its case has also served as the parent of the 25 Creedmoor.

Cartridge specifications	
Bullet Diameter	**0.264" (6.71 mm)**
Max Case Length	**1.920" (48.77 mm)**
Case Trim Length	**1.910" (48.51 mm)**
Max COAL	**2.825" (71.75 mm)**
Primer Pocket	**Large Rifle**
Standard Twist	**1:8"**
Case Capacity	**52.5 gr H_2O**
Max Pressure	**62,000 psi (SAAMI)**

100 gr Bullet · 25" barrel

COAL: 2.650" • Bullet length: 1.051" • Seat depth: 0.321" • Usable capacity: 48.4 / 52.5 gr H_2O

Powder	STEP 1 · 90%		STEP 2		STEP 3		STEP 4		STEP 5 · LIMIT			
	gr	fps	gr	fps	gr	fps	gr	fps	gr	fps	psi	Fill
Winchester StaBALL 6.5	44.8	3,075	46.0	3,145	47.3	3,225	48.5	3,300	49.8	3,380	62,000	104%
Hodgdon Leverevolution	39.9	3,065	41.0	3,135	42.1	3,205	43.2	3,270	44.3	3,340	61,800	88%
Winchester StaBALL Match	39.8	3,030	40.9	3,095	42.0	3,165	43.1	3,230	44.2	3,300	61,800	103%
Ramshot Big Game	42.1	3,010	43.3	3,085	44.5	3,155	45.6	3,220	46.8	3,295	61,700	99%
Accurate 2520	39.0	3,030	40.1	3,095	41.1	3,155	42.2	3,225	43.3	3,290	61,700	92%
Vihtavuori N550	41.4	3,015	42.5	3,080	43.7	3,150	44.9	3,220	46.0	3,285	61,900	100%
Accurate 4350	43.7	2,985	44.9	3,055	46.1	3,130	47.3	3,205	48.5	3,280	59,700	105%
Alliant Power Pro 2000-MR	40.7	2,990	41.8	3,055	43.0	3,130	44.1	3,195	45.2	3,265	61,900	98%
Hodgdon H380	41.2	2,975	42.4	3,050	43.5	3,115	44.6	3,180	45.8	3,255	62,000	101%
IMR 4895	37.6	2,975	38.6	3,040	39.7	3,105	40.8	3,175	41.8	3,240	61,900	89%
IMR 4350	42.5	2,935	43.7	3,005	44.9	3,080	46.0	3,150	47.2	3,225	61,600	105%
Vihtavuori N540	38.1	2,960	39.1	3,020	40.2	3,090	41.3	3,155	42.3	3,215	61,900	93%
Alliant Power Pro 4000-MR	43.8	2,905	45.0	2,975	46.3	3,055	47.5	3,130	48.7	3,200	61,900	103%
Hodgdon H4895	36.0	2,925	37.0	2,990	38.0	3,055	39.0	3,115	40.0	3,180	61,800	86%
Hodgdon H4831SC	45.0	2,870	46.3	2,950	47.5	3,025	48.8	3,100	50.0	3,175	61,800	104%
Hodgdon Varget	37.0	2,915	38.0	2,980	39.0	3,045	40.1	3,110	41.1	3,175	61,800	88%
Alliant Reloder 15	37.4	2,920	38.4	2,980	39.5	3,050	40.5	3,110	41.5	3,170	61,700	92%
Norma 203B	37.2	2,910	38.2	2,975	39.3	3,045	40.3	3,105	41.3	3,170	62,000	93%
Norma 202	36.5	2,915	37.5	2,975	38.5	3,035	39.5	3,100	40.5	3,160	62,000	91%
IMR 8208 XBR	35.1	2,880	36.1	2,940	37.0	3,000	38.0	3,060	39.0	3,120	61,800	88%

120 gr Bullet · 25" barrel

COAL: 2.677" • Bullet length: 1.236" • Seat depth: 0.479" • Usable capacity: 46.2 / 52.5 gr H_2O

Powder	STEP 1 · 90%		STEP 2		STEP 3		STEP 4		STEP 5 · LIMIT			
	gr	fps	gr	fps	gr	fps	gr	fps	gr	fps	psi	Fill
Winchester StaBALL 6.5	41.9	2,820	43.0	2,880	44.2	2,950	45.4	3,020	46.5	3,085	61,800	101%
Accurate 4350	41.3	2,780	42.4	2,845	43.6	2,920	44.8	2,990	45.9	3,055	61,700	104%
Hodgdon SUPERFORMANCE	42.6	2,760	43.8	2,830	45.0	2,900	46.1	2,965	47.3	3,035	61,800	100%
Alliant Reloder 17	39.3	2,750	40.4	2,815	41.5	2,885	42.6	2,950	43.7	3,020	61,700	95%
Hodgdon Leverevolution	36.9	2,765	37.9	2,825	39.0	2,890	40.0	2,955	41.0	3,015	61,600	85%
IMR 4955	42.2	2,725	43.4	2,800	44.5	2,865	45.7	2,935	46.9	3,010	62,000	102%
Reload Swiss RS60	39.6	2,735	40.7	2,800	41.8	2,870	42.9	2,935	44.0	3,005	61,700	98%
Ramshot Big Game	39.2	2,745	40.3	2,810	41.4	2,870	42.5	2,935	43.6	3,000	61,800	96%
Alliant Reloder 16	39.2	2,740	40.3	2,805	41.4	2,870	42.4	2,925	43.5	2,990	61,900	104%
Hodgdon H4350	39.3	2,725	40.4	2,790	41.5	2,855	42.6	2,920	43.7	2,985	61,900	95%
Winchester StaBALL Match	37.1	2,740	38.1	2,800	39.2	2,865	40.2	2,925	41.2	2,985	62,000	100%
IMR 4350	39.5	2,700	40.6	2,765	41.7	2,830	42.8	2,895	43.9	2,960	61,900	102%
Vihtavuori N555	40.7	2,700	41.8	2,760	43.0	2,830	44.1	2,895	45.2	2,960	61,100	105%
Alliant Power Pro 4000-MR	41.0	2,680	42.1	2,745	43.3	2,815	44.5	2,885	45.6	2,950	61,700	101%
Hodgdon H4831SC	42.2	2,675	43.4	2,745	44.5	2,805	45.7	2,875	46.9	2,950	61,800	102%
Winchester 760	39.1	2,690	40.2	2,755	41.3	2,815	42.3	2,875	43.4	2,940	61,900	97%
IMR 7828	43.2	2,650	44.4	2,715	45.6	2,785	46.8	2,855	48.0	2,930	61,700	105%
Norma URP	38.0	2,645	39.0	2,705	40.1	2,770	41.2	2,840	42.2	2,900	61,800	100%
Hodgdon Varget	34.1	2,630	35.0	2,685	36.0	2,745	37.0	2,805	37.9	2,860	61,700	85%
Alliant Reloder 15	34.2	2,620	35.2	2,680	36.1	2,730	37.0	2,785	38.0	2,845	61,700	88%

130 gr Bullet · 25" barrel

COAL: 2.670" • Bullet length: 1.322" • Seat depth: 0.571" • Usable capacity: 45.0 / 52.5 gr H_2O

Powder	STEP 1 · 90%		STEP 2		STEP 3		STEP 4		STEP 5 · LIMIT			
	gr	fps	gr	fps	gr	fps	gr	fps	gr	fps	psi	Fill
Winchester StaBALL 6.5	40.4	2,695	41.5	2,760	42.6	2,820	43.8	2,890	44.9	2,955	61,800	101%
Accurate 4350	40.0	2,680	41.1	2,745	42.2	2,810	43.3	2,870	44.4	2,940	61,900	103%
Hodgdon SUPERFORMANCE	41.1	2,655	42.3	2,720	43.4	2,785	44.6	2,855	45.7	2,920	61,600	99%
Alliant Reloder 17	38.1	2,650	39.1	2,710	40.2	2,775	41.3	2,840	42.3	2,900	61,900	94%
Reload Swiss RS70	41.6	2,625	42.8	2,695	43.9	2,760	45.1	2,830	46.2	2,895	61,900	103%
Ramshot Hunter	40.1	2,635	41.2	2,695	42.3	2,760	43.4	2,825	44.5	2,890	59,700	105%
Reload Swiss RS60	38.3	2,635	39.4	2,700	40.5	2,765	41.5	2,825	42.6	2,890	61,900	97%
Ramshot Big Game	37.8	2,625	38.8	2,685	39.9	2,745	41.0	2,810	42.0	2,870	61,700	95%
Hodgdon H4350	37.8	2,610	38.8	2,670	39.9	2,735	41.0	2,800	42.0	2,860	61,900	94%
Hodgdon Hybrid 100V	37.9	2,600	39.0	2,665	40.0	2,725	41.0	2,785	42.1	2,855	60,600	105%
Winchester StaBALL Match	35.7	2,610	36.7	2,670	37.7	2,730	38.7	2,785	39.7	2,845	61,900	99%
Alliant Power Pro 4000-MR	39.7	2,585	40.8	2,645	41.9	2,710	43.0	2,775	44.1	2,835	61,700	100%
Hodgdon H4831SC	40.8	2,575	41.9	2,640	43.0	2,700	44.2	2,770	45.3	2,835	61,600	101%
IMR 4350	38.0	2,590	39.0	2,650	40.1	2,710	41.2	2,775	42.2	2,835	61,700	101%
Hodgdon H380	36.7	2,580	37.7	2,635	38.8	2,700	39.8	2,760	40.8	2,815	61,900	96%
Winchester 760	37.6	2,570	38.6	2,630	39.7	2,690	40.8	2,755	41.8	2,815	61,700	95%
Alliant Reloder 23	39.2	2,560	40.3	2,620	41.4	2,685	42.4	2,740	43.5	2,805	58,800	105%
Hodgdon H414	37.3	2,560	38.3	2,615	39.3	2,675	40.4	2,740	41.4	2,800	61,900	94%
Winchester Supreme 780	42.2	2,505	43.4	2,575	44.5	2,635	45.7	2,705	46.9	2,770	59,000	105%
Hodgdon Varget	32.8	2,505	33.7	2,560	34.6	2,615	35.5	2,670	36.4	2,725	61,700	84%

140 gr Bullet · 25" barrel

COAL: 2.680" • Bullet length: 1.370" • Seat depth: 0.610" • Usable capacity: 44.5 / 52.5 gr H_2O

Powder	STEP 1 · 90%		STEP 2		STEP 3		STEP 4		STEP 5 · LIMIT			
	gr	fps	gr	fps	gr	fps	gr	fps	gr	fps	psi	Fill
Winchester StaBALL 6.5	39.4	2,600	40.5	2,660	41.6	2,720	42.7	2,780	43.8	2,845	62,000	99%
Accurate 4350	39.0	2,590	40.1	2,650	41.1	2,710	42.2	2,770	43.3	2,835	62,000	102%
Alliant Reloder 26	41.9	2,575	43.0	2,635	44.2	2,705	45.4	2,770	46.5	2,835	60,300	105%
Hodgdon SUPERFORMANCE	40.2	2,575	41.3	2,635	42.5	2,705	43.6	2,765	44.7	2,830	62,000	98%
Ramshot Hunter	39.5	2,565	40.6	2,625	41.7	2,690	42.8	2,750	43.9	2,815	61,400	105%
IMR 4955	39.9	2,550	41.0	2,615	42.1	2,680	43.2	2,740	44.3	2,805	61,900	100%
Reload Swiss RS70	40.6	2,545	41.7	2,610	42.9	2,680	44.0	2,740	45.1	2,805	61,700	102%
Hodgdon Hybrid 100V	37.4	2,535	38.4	2,595	39.5	2,660	40.5	2,720	41.5	2,780	62,000	105%
IMR 7828SSC	40.4	2,510	41.5	2,575	42.6	2,635	43.8	2,705	44.9	2,765	61,500	105%
Vihtavuori N555	38.2	2,530	39.3	2,590	40.3	2,645	41.4	2,710	42.4	2,765	62,000	102%
Ramshot Big Game	36.8	2,525	37.8	2,580	38.8	2,640	39.9	2,700	40.9	2,755	61,900	94%
Hodgdon H4831SC	39.9	2,500	41.0	2,560	42.1	2,625	43.2	2,685	44.3	2,750	61,900	100%
Alliant Power Pro 4000-MR	38.8	2,500	39.9	2,560	41.0	2,625	42.0	2,680	43.1	2,745	61,900	99%
Hodgdon H4350	36.6	2,510	37.6	2,570	38.7	2,630	39.7	2,690	40.7	2,745	61,600	92%
IMR 7828	40.5	2,485	41.6	2,545	42.8	2,610	43.9	2,670	45.0	2,735	61,700	102%
IMR 4350	36.9	2,495	37.9	2,550	39.0	2,615	40.0	2,670	41.0	2,730	61,800	99%
Vihtavuori N560	40.1	2,480	41.2	2,535	42.4	2,600	43.5	2,660	44.6	2,720	61,400	105%
Winchester 760	36.7	2,480	37.7	2,540	38.8	2,600	39.8	2,660	40.8	2,715	62,000	94%
IMR 4451	36.7	2,465	37.7	2,520	38.8	2,585	39.8	2,640	40.8	2,700	61,700	95%
Hodgdon H414	36.3	2,465	37.3	2,520	38.3	2,580	39.3	2,635	40.3	2,695	61,800	92%

150 gr Bullet · 25" barrel

COAL: 2.780" • Bullet length: 1.467" • Seat depth: 0.607" • Usable capacity: 44.5 / 52.5 gr H_2O

Powder	STEP 1 · 90%		STEP 2		STEP 3		STEP 4		STEP 5 · LIMIT			
	gr	fps	gr	fps	gr	fps	gr	fps	gr	fps	psi	Fill
Alliant Reloder 26	41.6	2,525	42.8	2,590	43.9	2,650	45.1	2,720	46.2	2,780	61,800	104%
Accurate 4350	38.3	2,505	39.3	2,560	40.4	2,620	41.5	2,685	42.5	2,740	61,800	100%
Hodgdon SUPERFORMANCE	39.5	2,495	40.6	2,555	41.7	2,615	42.8	2,680	43.9	2,740	61,700	97%
Winchester StaBALL 6.5	38.6	2,505	39.7	2,560	40.8	2,620	41.8	2,675	42.9	2,740	61,700	97%
IMR 4831	38.8	2,485	39.9	2,545	41.0	2,610	42.0	2,665	43.1	2,730	61,800	104%
Ramshot Hunter	39.0	2,495	40.1	2,555	41.1	2,610	42.2	2,670	43.3	2,730	61,900	103%
Reload Swiss RS70	40.0	2,480	41.1	2,540	42.2	2,600	43.3	2,660	44.4	2,725	61,600	101%
Hodgdon Hybrid 100V	36.8	2,460	37.8	2,515	38.8	2,575	39.9	2,640	40.9	2,695	61,900	103%
Norma 204	38.0	2,440	39.0	2,495	40.1	2,560	41.2	2,620	42.2	2,675	61,900	100%
Norma MRP	39.3	2,430	40.4	2,490	41.5	2,550	42.6	2,610	43.7	2,670	61,800	102%
Alliant Reloder 23	38.3	2,435	39.3	2,490	40.4	2,550	41.5	2,610	42.5	2,665	61,800	104%
Vihtavuori N555	37.1	2,440	38.1	2,495	39.2	2,555	40.2	2,610	41.2	2,665	61,800	99%
Accurate 2700	36.5	2,430	37.5	2,485	38.5	2,540	39.6	2,600	40.6	2,655	61,900	93%
IMR 7828	39.8	2,420	40.9	2,475	42.0	2,535	43.1	2,595	44.2	2,655	62,000	100%
Hodgdon H4350	35.8	2,425	36.8	2,480	37.8	2,535	38.8	2,590	39.8	2,645	61,700	90%
IMR 4350	36.1	2,405	37.1	2,465	38.1	2,520	39.1	2,575	40.1	2,630	61,900	97%
Alliant Reloder 16	35.5	2,410	36.5	2,465	37.5	2,520	38.4	2,570	39.4	2,625	61,600	98%
Vihtavuori N560	39.2	2,400	40.3	2,455	41.4	2,510	42.4	2,565	43.5	2,620	62,000	102%
Winchester 760	36.0	2,395	37.0	2,450	38.0	2,505	39.0	2,560	40.0	2,620	61,900	92%
IMR 4451	36.1	2,385	37.1	2,440	38.1	2,500	39.1	2,555	40.1	2,610	61,700	94%

6.5 Grendel

Three men designed the 6.5 Grendel as a low-recoil accurate cartridge for the AR-15. They were Bill Alexander of Alexander Arms, competitive shooter Arne Brennan and Lapua ballistician Janne Pohjoispää. It is an improved variation of the 6.5mm PPC. Its case head diameter matches the .220 Russian and 7.62x39mm. It therefore requires a nonstandard AR-15 bolt. Alexander Arms unveiled the cartridge in May 2003. The Grendel name remained an Alexander Arms trademark until 2010. It was then released for SAAMI standardization with Hornady's collaboration.

Factory loads range from 90-grain bullets at about 2,900 fps to 129- and 130-grain bullets at about 2,500 fps. Hornady's 123-grain ELD Match is rated at 2,580 fps from a 24-inch barrel. For a cartridge of its size its long high-ballistic-coefficient bullets resist wind drift well. It is used for hunting medium game, target shooting and gas-gun competition. From the AR-15 it has spread to bolt-action and Kalashnikov-pattern rifles. The Grendel case also served as the parent of Hornady's 6mm ARC and 22 ARC.

Cartridge specifications	
Bullet Diameter	**0.264" (6.71 mm)**
Max Case Length	**1.520" (38.61 mm)**
Case Trim Length	**1.510" (38.35 mm)**
Max COAL	**2.260" (57.40 mm)**
Primer Pocket	**Small Rifle**
Standard Twist	**1:8"**
Case Capacity	**35.0 gr H_2O**
Max Pressure	**52,000 psi (SAAMI)**

90 gr Bullet · 25" barrel

COAL: 2.190" • Bullet length: 0.977" • Seat depth: 0.307" • Usable capacity: 30.8 / 35.0 gr H_2O

Powder	STEP 1 · 90%		STEP 2		STEP 3		STEP 4		STEP 5 · LIMIT			
	gr	fps	gr	fps	gr	fps	gr	fps	gr	fps	psi	Fill
Hodgdon CFE BLK	25.6	2,785	26.3	2,845	27.0	2,905	27.7	2,965	28.4	3,030	52,000	95%
Alliant Power Pro 1200-R	25.9	2,695	26.6	2,755	27.4	2,825	28.1	2,885	28.8	2,950	51,600	95%
Reload Swiss RS40	26.7	2,695	27.4	2,755	28.2	2,820	28.9	2,880	29.7	2,950	51,800	103%
Norma 200	25.3	2,695	26.0	2,755	26.7	2,820	27.4	2,880	28.1	2,940	51,600	99%
Shooters World Tactical Rifle	28.2	2,670	29.0	2,740	29.8	2,805	30.5	2,865	31.3	2,935	50,000	105%
Vihtavuori N130	24.9	2,685	25.6	2,750	26.3	2,810	27.0	2,870	27.7	2,935	51,700	103%
Accurate 2460	28.1	2,680	28.9	2,740	29.6	2,800	30.4	2,860	31.2	2,930	51,600	102%
Hodgdon H4895	28.0	2,675	28.8	2,740	29.6	2,805	30.3	2,865	31.1	2,930	50,900	105%
Accurate 2230	27.7	2,675	28.5	2,740	29.3	2,805	30.0	2,860	30.8	2,925	51,600	101%
Ramshot X-Terminator	27.5	2,675	28.3	2,740	29.1	2,805	29.8	2,860	30.6	2,925	51,800	101%
IMR 3031	26.8	2,635	27.6	2,700	28.3	2,760	29.1	2,830	29.8	2,890	51,900	103%
Shooters World The Patriot	26.9	2,640	27.6	2,700	28.4	2,765	29.1	2,825	29.9	2,890	51,700	101%
Accurate 2200	25.3	2,640	26.0	2,700	26.7	2,760	27.4	2,820	28.1	2,880	51,600	104%
Accurate 2495	28.0	2,615	28.8	2,680	29.6	2,750	30.3	2,810	31.1	2,875	51,900	102%
Alliant Reloder 10x	24.8	2,610	25.5	2,675	26.2	2,735	26.9	2,800	27.6	2,860	51,600	101%
Accurate 2015	26.0	2,605	26.7	2,665	27.4	2,725	28.2	2,795	28.9	2,855	51,700	97%
Hodgdon H335	27.4	2,600	28.1	2,660	28.9	2,725	29.6	2,780	30.4	2,850	51,900	98%
IMR 4320	28.7	2,565	29.5	2,630	30.3	2,695	31.1	2,765	31.9	2,830	51,600	104%
Accurate LT-32	24.6	2,550	25.3	2,610	26.0	2,675	26.6	2,725	27.3	2,785	51,800	98%
Hodgdon H322	25.1	2,540	25.8	2,600	26.5	2,660	27.2	2,720	27.9	2,780	51,700	96%

100 gr Bullet · 25" barrel

COAL: 2.135" • Bullet length: 1.051" • Seat depth: 0.436" • Usable capacity: 29.3 / 35.0 gr H_2O

Powder	STEP 1 · 90%		STEP 2		STEP 3		STEP 4		STEP 5 · LIMIT			
	gr	fps	gr	fps	gr	fps	gr	fps	gr	fps	psi	Fill
Hodgdon CFE BLK	24.1	2,610	24.8	2,675	25.5	2,735	26.1	2,785	26.8	2,845	51,600	94%
Shooters World Tactical Rifle	26.8	2,550	27.6	2,615	28.3	2,675	29.1	2,740	29.8	2,800	50,600	105%
Alliant Power Pro 1200-R	24.6	2,565	25.3	2,625	26.0	2,685	26.6	2,735	27.3	2,795	51,900	95%
Hodgdon H4895	26.6	2,550	27.4	2,615	28.1	2,670	28.9	2,740	29.6	2,795	51,500	105%
Reload Swiss RS40	25.3	2,550	26.0	2,610	26.7	2,670	27.4	2,730	28.1	2,790	51,600	102%
Norma 200	23.9	2,555	24.5	2,610	25.2	2,670	25.9	2,730	26.5	2,780	51,700	98%
Shooters World AR Plus	25.4	2,545	26.1	2,605	26.8	2,665	27.5	2,720	28.2	2,780	51,900	98%
Accurate 2460	26.5	2,530	27.2	2,585	27.9	2,640	28.7	2,705	29.4	2,760	51,600	101%
Accurate 2230	26.1	2,525	26.8	2,580	27.6	2,645	28.3	2,700	29.0	2,755	51,500	100%
Ramshot X-Terminator	25.9	2,525	26.6	2,580	27.4	2,645	28.1	2,700	28.8	2,755	51,600	100%
IMR 3031	25.4	2,505	26.1	2,565	26.8	2,625	27.5	2,685	28.2	2,740	51,900	103%
Accurate 2200	24.0	2,505	24.7	2,565	25.4	2,625	26.0	2,675	26.7	2,735	52,000	104%
Shooters World The Patriot	25.5	2,505	26.2	2,560	26.9	2,620	27.6	2,675	28.3	2,735	51,900	101%
Accurate 2495	26.5	2,490	27.2	2,550	27.9	2,605	28.7	2,675	29.4	2,730	51,500	101%
Alliant Reloder 10x	23.6	2,490	24.3	2,550	24.9	2,605	25.6	2,665	26.2	2,720	52,000	101%
Accurate 2015	24.7	2,475	25.4	2,535	26.0	2,585	26.7	2,645	27.4	2,705	51,600	97%
Hodgdon H335	25.9	2,465	26.6	2,520	27.4	2,585	28.1	2,645	28.8	2,700	51,700	97%
IMR 4320	27.3	2,455	28.1	2,520	28.8	2,575	29.6	2,645	30.3	2,700	51,600	104%
Alliant Reloder 7	22.6	2,480	23.2	2,530	23.9	2,590	24.5	2,645	25.1	2,695	52,000	91%
Accurate LT-32	23.2	2,410	23.9	2,470	24.5	2,520	25.1	2,575	25.8	2,635	51,600	97%

120 gr Bullet · 25" barrel

COAL: 2.135" • Bullet length: 1.233" • Seat depth: 0.618" • Usable capacity: 26.9 / 35.0 gr H_2O

Powder	STEP 1 · 90%		STEP 2		STEP 3		STEP 4		STEP 5 · LIMIT			
	gr	fps	gr	fps	gr	fps	gr	fps	gr	fps	psi	Fill
Hodgdon Leverevolution	26.6	2,360	27.4	2,425	28.1	2,480	28.9	2,545	29.6	2,600	50,100	105%
Vihtavuori N530	23.7	2,330	24.4	2,390	25.0	2,435	25.6	2,485	26.3	2,545	50,800	105%
Shooters World Tactical Rifle	24.6	2,300	25.3	2,360	26.0	2,415	26.6	2,465	27.3	2,525	51,700	104%
Hodgdon CFE BLK	21.9	2,305	22.5	2,355	23.1	2,405	23.7	2,455	24.3	2,510	51,900	93%
Hodgdon H4895	24.2	2,285	24.9	2,340	25.5	2,390	26.2	2,445	26.9	2,500	51,900	103%
Reload Swiss RS40	23.0	2,270	23.6	2,320	24.3	2,375	25.0	2,435	25.6	2,485	51,900	101%
Alliant Power Pro 1200-R	22.1	2,260	22.7	2,310	23.4	2,370	24.0	2,420	24.6	2,470	51,900	93%
Norma 200	21.4	2,255	22.0	2,305	22.6	2,355	23.2	2,410	23.8	2,460	51,800	96%
Accurate 2495	24.1	2,235	24.8	2,290	25.5	2,350	26.1	2,400	26.8	2,455	51,900	100%
Hodgdon Varget	24.5	2,235	25.2	2,290	25.9	2,345	26.5	2,395	27.2	2,455	50,600	105%
Hodgdon Benchmark	23.0	2,230	23.6	2,280	24.3	2,335	25.0	2,395	25.6	2,440	51,400	105%
IMR 3031	23.0	2,235	23.6	2,285	24.3	2,340	24.9	2,390	25.5	2,440	51,700	101%
IMR 8208 XBR	23.4	2,230	24.0	2,280	24.7	2,335	25.4	2,395	26.0	2,440	50,200	105%
Accurate 2460	23.8	2,230	24.4	2,280	25.1	2,335	25.8	2,390	26.4	2,435	51,800	98%
Alliant Power Pro Varmint	24.0	2,210	24.7	2,270	25.4	2,325	26.0	2,375	26.7	2,430	49,300	105%
Accurate 2230	23.4	2,220	24.0	2,265	24.7	2,320	25.4	2,375	26.0	2,420	51,900	98%
Ramshot X-Terminator	23.2	2,215	23.9	2,270	24.5	2,320	25.1	2,365	25.8	2,420	51,700	97%
Hodgdon H335	23.6	2,200	24.3	2,255	24.9	2,305	25.6	2,360	26.2	2,410	51,800	96%
Shooters World The Patriot	23.0	2,210	23.6	2,255	24.3	2,315	24.9	2,360	25.5	2,410	51,800	98%
Vihtavuori N133	22.1	2,190	22.7	2,240	23.4	2,295	24.0	2,345	24.6	2,395	48,900	105%

130 gr Bullet · 25" barrel

COAL: 2.135" • Bullet length: 1.321" • Seat depth: 0.705" • Usable capacity: 25.9 / 35.0 gr H_2O

Powder	STEP 1 · 90%		STEP 2		STEP 3		STEP 4		STEP 5 · LIMIT			
	gr	fps	gr	fps	gr	fps	gr	fps	gr	fps	psi	Fill
Hodgdon Leverevolution	25.6	2,255	26.3	2,315	27.0	2,370	27.7	2,425	28.4	2,480	50,500	105%
Vihtavuori N530	22.7	2,220	23.3	2,270	23.9	2,320	24.6	2,375	25.2	2,425	51,900	105%
Shooters World Tactical Rifle	23.5	2,185	24.1	2,235	24.8	2,290	25.5	2,350	26.1	2,400	51,800	104%
Alliant AR-Comp	22.8	2,185	23.4	2,230	24.1	2,290	24.7	2,335	25.3	2,385	50,100	105%
Hodgdon H4895	23.0	2,155	23.6	2,205	24.3	2,260	25.0	2,315	25.6	2,365	51,500	102%
Hodgdon CFE BLK	20.8	2,160	21.4	2,215	22.0	2,265	22.5	2,305	23.1	2,360	51,500	92%
IMR 4895	23.6	2,150	24.3	2,210	24.9	2,255	25.6	2,310	26.2	2,360	48,700	105%
Hodgdon Varget	23.5	2,130	24.1	2,180	24.8	2,235	25.5	2,295	26.1	2,340	51,300	105%
Accurate 2495	23.0	2,120	23.6	2,170	24.3	2,225	25.0	2,285	25.6	2,330	51,900	100%
IMR 8208 XBR	22.5	2,130	23.1	2,180	23.8	2,235	24.4	2,280	25.0	2,330	51,600	105%
Ramshot TAC	23.0	2,125	23.6	2,175	24.3	2,230	24.9	2,280	25.5	2,330	49,200	105%
Shooters World AR Plus	22.0	2,130	22.6	2,180	23.2	2,230	23.8	2,280	24.4	2,325	51,500	95%
IMR 4320	23.9	2,110	24.5	2,160	25.2	2,215	25.9	2,270	26.5	2,320	51,800	103%
Hodgdon Benchmark	22.0	2,120	22.6	2,165	23.2	2,215	23.8	2,265	24.4	2,310	51,800	104%
IMR 3031	21.9	2,110	22.5	2,160	23.1	2,210	23.7	2,260	24.3	2,310	51,600	100%
Accurate 2460	22.6	2,100	23.2	2,150	23.9	2,205	24.5	2,250	25.1	2,295	51,900	97%
Hodgdon H335	22.5	2,080	23.1	2,130	23.8	2,185	24.4	2,230	25.0	2,280	51,600	95%
Ramshot X-Terminator	22.1	2,090	22.7	2,140	23.3	2,185	23.9	2,235	24.5	2,280	51,800	96%
Accurate 2230	22.1	2,080	22.7	2,125	23.4	2,180	24.0	2,225	24.6	2,275	51,500	96%
Shooters World The Patriot	21.9	2,080	22.5	2,130	23.1	2,180	23.7	2,225	24.3	2,275	51,800	98%

140 gr Bullet · 25" barrel

COAL: 2.140" • Bullet length: 1.380" • Seat depth: 0.760" • Usable capacity: 25.4 / 35.0 gr H_2O

Powder	STEP 1 · 90%		STEP 2		STEP 3		STEP 4		STEP 5 · LIMIT			
	gr	fps	gr	fps	gr	fps	gr	fps	gr	fps	psi	Fill
Hodgdon Leverevolution	25.0	2,180	25.7	2,235	26.4	2,290	27.1	2,345	27.8	2,400	51,800	105%
Shooters World Tactical Rifle	22.8	2,095	23.4	2,145	24.1	2,200	24.7	2,250	25.3	2,300	51,900	103%
Vihtavuori N530	21.7	2,110	22.3	2,155	22.9	2,205	23.5	2,255	24.1	2,300	51,500	102%
Alliant AR-Comp	22.2	2,095	22.8	2,140	23.4	2,190	24.1	2,245	24.7	2,295	51,900	104%
IMR 4895	23.1	2,085	23.8	2,140	24.4	2,185	25.1	2,240	25.7	2,290	50,700	105%
Vihtavuori N140	23.5	2,075	24.1	2,120	24.8	2,175	25.5	2,230	26.1	2,280	50,600	105%
Hodgdon H4895	22.3	2,065	22.9	2,115	23.6	2,170	24.2	2,215	24.8	2,265	51,800	101%
Hodgdon Varget	22.8	2,050	23.4	2,100	24.1	2,155	24.7	2,200	25.3	2,250	51,500	104%
Ramshot TAC	22.5	2,050	23.1	2,100	23.8	2,155	24.4	2,205	25.0	2,250	50,700	105%
Vihtavuori N135	22.1	2,060	22.7	2,110	23.3	2,155	23.9	2,200	24.5	2,250	50,700	105%
Alliant Power Pro Varmint	22.6	2,040	23.2	2,085	23.9	2,140	24.5	2,190	25.1	2,235	51,500	105%
IMR 4320	23.1	2,020	23.8	2,075	24.4	2,125	25.1	2,180	25.7	2,225	51,700	102%
IMR 8208 XBR	21.7	2,035	22.3	2,080	22.9	2,130	23.5	2,175	24.1	2,225	51,700	103%
IMR 4064	22.3	2,015	22.9	2,065	23.6	2,120	24.2	2,165	24.8	2,210	49,300	105%
Hodgdon Benchmark	21.2	2,020	21.8	2,065	22.4	2,115	22.9	2,155	23.5	2,205	51,800	102%
Alliant Reloder 10x	19.7	1,995	20.3	2,045	20.8	2,090	21.3	2,130	21.9	2,185	51,800	97%
Vihtavuori N130	19.4	2,005	19.9	2,050	20.4	2,090	21.0	2,140	21.5	2,185	51,900	97%
Vihtavuori N133	20.7	2,000	21.3	2,050	21.9	2,095	22.4	2,135	23.0	2,185	51,500	104%
Accurate 2460	21.7	1,995	22.3	2,040	22.9	2,085	23.5	2,135	24.1	2,180	51,700	95%
Hodgdon H335	21.8	1,990	22.4	2,040	23.0	2,085	23.6	2,135	24.2	2,180	51,600	94%

6.5 PRC

Hornady introduced the 6.5 Precision Rifle Cartridge (PRC) at the 2018 SHOT Show. SAAMI approved it later that year. It was conceived as a larger companion to the 6.5 Creedmoor. The case derives from the .300 Ruger Compact Magnum. That cartridge is itself based on the beltless .375 Ruger. The 6.5 PRC keeps the parent's 30-degree shoulder. The case length is 2.030 inches and the maximum overall length is 2.955 inches.

Hornady's 143-grain ELD-X hunting load is rated at 2,960 fps from a 24-inch barrel. That is about 250 fps faster than the 6.5 Creedmoor. A 147-grain ELD Match load is offered for target work. Recoil is moderate and roughly comparable to a full-power .30-06 Springfield load. The cartridge is used in Precision Rifle Series (PRS) competition and for long-range hunting of most North American big game. Several manufacturers offer factory rifles and ammunition.

Cartridge specifications	
Bullet Diameter	**0.264" (6.71 mm)**
Max Case Length	**2.030" (51.56 mm)**
Case Trim Length	**2.020" (51.31 mm)**
Max COAL	**2.955" (75.06 mm)**
Primer Pocket	**Large Rifle**
Standard Twist	**1:8"**
Case Capacity	**67.7 gr H_2O**
Max Pressure	**65,000 psi (SAAMI)**

120 gr Bullet · 25" barrel

COAL: 2.775" • Bullet length: 1.295" • Seat depth: 0.550" • Usable capacity: 60.5 / 67.8 gr H_2O

Powder	STEP 1 · 90%		STEP 2		STEP 3		STEP 4		STEP 5 · LIMIT			
	gr	fps	gr	fps	gr	fps	gr	fps	gr	fps	psi	Fill
Accurate 4350	50.4	3,080	51.8	3,150	53.2	3,225	54.6	3,295	56.0	3,370	65,000	97%
Alliant Reloder 23	51.8	3,070	53.2	3,140	54.6	3,210	56.1	3,285	57.5	3,360	65,000	103%
Hodgdon SUPERFORMANCE	51.3	3,045	52.7	3,115	54.1	3,185	55.6	3,260	57.0	3,335	64,700	92%
IMR 4831	50.6	3,035	52.0	3,105	53.4	3,180	54.8	3,255	56.2	3,330	64,900	100%
Alliant Reloder 22	51.9	3,015	53.4	3,095	54.8	3,165	56.3	3,240	57.7	3,315	64,900	101%
Accurate MagPro	56.0	2,995	57.5	3,070	59.1	3,150	60.7	3,235	62.2	3,310	64,100	105%
Alliant Reloder 26	52.9	3,010	54.4	3,085	55.8	3,155	57.3	3,230	58.8	3,310	64,800	98%
Ramshot Grand	56.2	2,985	57.8	3,065	59.3	3,140	60.9	3,220	62.4	3,300	64,200	105%
IMR 4955	50.6	2,990	52.0	3,060	53.4	3,135	54.8	3,205	56.2	3,280	65,000	93%
Norma MRP	51.8	2,990	53.3	3,065	54.7	3,135	56.1	3,205	57.6	3,280	64,900	99%
Vihtavuori N560	52.6	3,000	54.0	3,065	55.5	3,140	57.0	3,210	58.4	3,280	65,000	101%
Hodgdon H4831SC	51.5	2,980	52.9	3,050	54.4	3,125	55.8	3,195	57.2	3,270	65,000	95%
Ramshot Hunter	49.8	2,990	51.2	3,060	52.5	3,125	53.9	3,200	55.3	3,270	64,800	97%
Vihtavuori N565	54.4	2,970	55.9	3,040	57.4	3,115	58.9	3,190	60.4	3,265	64,200	105%
Alliant Power Pro 4000-MR	50.0	2,970	51.4	3,040	52.8	3,110	54.2	3,180	55.6	3,255	64,800	94%
Hodgdon H4831	51.4	2,955	52.8	3,025	54.3	3,100	55.7	3,175	57.1	3,245	64,900	101%
IMR 7828	52.2	2,950	53.7	3,025	55.1	3,095	56.5	3,165	58.0	3,240	64,800	96%
Reload Swiss RS70	50.6	2,940	52.0	3,015	53.4	3,085	54.8	3,155	56.2	3,225	64,900	94%
Accurate 3100	50.9	2,930	52.3	3,000	53.7	3,075	55.1	3,145	56.5	3,220	64,700	101%
IMR 4007 SSC	46.7	2,930	48.0	2,995	49.3	3,060	50.6	3,130	51.9	3,195	64,700	92%

140 gr Bullet · 25" barrel

COAL: 2.725" • Bullet length: 1.371" • Seat depth: 0.676" • Usable capacity: 58.9 / 67.8 gr H_2O

Powder	STEP 1 · 90%		STEP 2		STEP 3		STEP 4		STEP 5 · LIMIT			
	gr	fps	gr	fps	gr	fps	gr	fps	gr	fps	psi	Fill
Ramshot Magnum	55.4	2,845	57.0	2,925	58.5	2,995	60.0	3,070	61.6	3,150	63,200	105%
Accurate MagPro	53.7	2,830	55.2	2,905	56.7	2,980	58.2	3,050	59.7	3,130	64,900	103%
Accurate 4350	47.5	2,845	48.8	2,905	50.1	2,970	51.5	3,040	52.8	3,105	64,800	94%
Alliant Reloder 23	48.9	2,840	50.3	2,910	51.6	2,970	52.9	3,035	54.3	3,105	64,800	100%
IMR 4831	48.2	2,835	49.5	2,900	50.9	2,970	52.2	3,035	53.5	3,100	64,800	98%
Ramshot Grand	53.8	2,810	55.3	2,880	56.8	2,955	58.3	3,025	59.8	3,100	64,800	103%
Alliant Reloder 26	50.1	2,810	51.5	2,875	52.9	2,945	54.3	3,015	55.7	3,085	64,800	95%
Hodgdon Retumbo	53.5	2,800	55.0	2,870	56.5	2,940	57.9	3,005	59.4	3,080	63,900	105%
Reload Swiss RS76	54.2	2,795	55.7	2,865	57.2	2,935	58.7	3,005	60.2	3,075	64,900	103%
Vihtavuori N565	50.9	2,780	52.3	2,845	53.8	2,915	55.2	2,980	56.6	3,050	64,800	101%
Winchester StaBALL HD	54.6	2,765	56.1	2,835	57.7	2,910	59.2	2,980	60.7	3,050	64,000	105%
Norma MRP	49.1	2,785	50.5	2,850	51.8	2,915	53.1	2,975	54.5	3,045	64,900	96%
IMR 7828SSC	49.1	2,775	50.5	2,845	51.8	2,905	53.1	2,970	54.5	3,040	64,800	96%
Hodgdon H4831SC	48.8	2,775	50.1	2,835	51.5	2,905	52.9	2,970	54.2	3,035	64,900	93%
Hodgdon H1000	51.2	2,755	52.6	2,820	54.0	2,885	55.5	2,960	56.9	3,030	63,300	105%
IMR 7828	49.2	2,750	50.6	2,820	52.0	2,885	53.3	2,945	54.7	3,015	64,900	93%
Vihtavuori N570	51.8	2,745	53.2	2,810	54.6	2,875	56.1	2,945	57.5	3,015	64,800	100%
Vihtavuori N560	49.0	2,760	50.4	2,820	51.7	2,880	53.0	2,940	54.4	3,005	64,700	97%
IMR 7977	51.2	2,715	52.6	2,780	54.0	2,845	55.5	2,920	56.9	2,990	64,100	105%
Vihtavuori N170	50.6	2,655	52.0	2,715	53.4	2,775	54.8	2,840	56.2	2,900	64,800	99%

150 gr Bullet · 25" barrel

COAL: 2.935" • Bullet length: 1.484" • Seat depth: 0.579" • Usable capacity: 60.2 / 67.8 gr H_2O

Powder	STEP 1 · 90%		STEP 2		STEP 3		STEP 4		STEP 5 · LIMIT			
	gr	fps	gr	fps	gr	fps	gr	fps	gr	fps	psi	Fill
Ramshot Magnum	55.9	2,815	57.5	2,890	59.0	2,960	60.5	3,030	62.1	3,105	64,800	103%
Accurate MagPro	53.7	2,775	55.2	2,845	56.7	2,915	58.2	2,985	59.7	3,060	64,800	101%
Ramshot Grand	53.9	2,750	55.4	2,820	56.9	2,890	58.4	2,960	59.9	3,030	65,000	101%
IMR 4831	48.1	2,760	49.4	2,825	50.8	2,890	52.1	2,955	53.4	3,020	64,900	95%
Hodgdon Retumbo	53.6	2,745	55.1	2,810	56.5	2,875	58.0	2,945	59.5	3,015	64,700	103%
Vihtavuori N568	53.9	2,725	55.4	2,795	56.9	2,870	58.4	2,940	59.9	3,015	64,900	103%
Alliant Reloder 23	48.4	2,745	49.8	2,810	51.1	2,875	52.4	2,935	53.8	3,000	64,800	97%
Alliant Reloder 22	48.9	2,735	50.3	2,800	51.6	2,865	52.9	2,925	54.3	2,990	65,000	96%
Alliant Reloder 26	49.8	2,735	51.2	2,800	52.5	2,860	53.9	2,925	55.3	2,990	64,800	92%
Winchester StaBALL HD	54.8	2,715	56.3	2,780	57.8	2,850	59.4	2,925	60.9	2,990	64,900	103%
Hodgdon Hybrid 100V	45.8	2,730	47.1	2,790	48.3	2,850	49.6	2,915	50.9	2,980	64,900	95%
Hodgdon H1000	51.5	2,710	52.9	2,770	54.4	2,840	55.8	2,905	57.2	2,970	64,800	103%
IMR 7828SSC	48.7	2,695	50.1	2,760	51.4	2,820	52.8	2,885	54.1	2,945	65,000	93%
Vihtavuori N565	49.8	2,685	51.2	2,750	52.5	2,810	53.9	2,870	55.3	2,935	64,800	97%
Vihtavuori N570	51.1	2,675	52.5	2,735	54.0	2,805	55.4	2,870	56.8	2,935	64,800	97%
IMR 7977	51.4	2,665	52.8	2,730	54.3	2,800	55.7	2,865	57.1	2,930	64,900	103%
IMR 7828	48.8	2,675	50.1	2,735	51.5	2,800	52.9	2,865	54.2	2,925	64,700	91%
Ramshot Hunter	46.7	2,680	48.0	2,740	49.3	2,800	50.6	2,860	51.9	2,925	64,900	92%
Accurate 3100	47.9	2,665	49.2	2,725	50.5	2,790	51.9	2,855	53.2	2,915	64,800	96%
Vihtavuori N560	48.2	2,660	49.5	2,715	50.9	2,775	52.2	2,835	53.5	2,890	65,000	93%

6.5-284 Norma

The 6.5-284 began as a wildcat formed by necking down the .284 Winchester case to 6.5mm. The parent case was introduced in 1963. The .284's short and fat case with a rebated rim was well suited to long aerodynamic 6.5mm bullets. Wildcatters adopted the combination soon after the parent cartridge appeared. Norma later took up the design. It introduced the cartridge in 2000 as the 6.5mm-284 Norma. C.I.P. has listed it since February 2000. Norma specified a longer overall length than the .284 Winchester so that long bullets could be seated farther out of the case.

The 6.5-284 became widely used in long-range target shooting. Its events included 1,000-yard benchrest, NRA long-range high-power and F-Class Open competition. For many years it was among the most common cartridges in these events. Bullets of about 120 to 142 grains are typical. They are generally driven at velocities near 2,800 to 3,000 fps. The cartridge is also used for hunting deer and similar game. Norma loads factory ammunition. Brass is produced by Norma and other makers.

Cartridge specifications	
Bullet Diameter	**0.264" (6.71 mm)**
Max Case Length	**2.170" (55.12 mm)**
Case Trim Length	**2.160" (54.86 mm)**
Max COAL	**3.228" (81.99 mm)**
Primer Pocket	**Large Rifle**
Standard Twist	**1:8"**
Case Capacity	**64.9 gr H_2O**
Max Pressure	**58,000 psi (SAAMI)**

100 gr Bullet · 25" barrel

COAL: 2.750" • Bullet length: 0.999" • Seat depth: 0.419" • Usable capacity: 59.3 / 64.9 gr H_2O

Powder	STEP 1 · 90%		STEP 2		STEP 3		STEP 4		STEP 5 · LIMIT			
	gr	fps	gr	fps	gr	fps	gr	fps	gr	fps	psi	Fill
Alliant Reloder 26	54.0	3,100	55.5	3,180	57.0	3,260	58.5	3,340	60.0	3,425	57,700	102%
Alliant Reloder 23	51.4	3,115	52.8	3,190	54.3	3,270	55.7	3,345	57.1	3,420	57,900	104%
Hodgdon SUPERFORMANCE	51.1	3,090	52.5	3,165	54.0	3,245	55.4	3,320	56.8	3,395	57,900	94%
Vihtavuori N560	53.6	3,095	55.1	3,170	56.6	3,245	58.1	3,320	59.6	3,395	55,900	105%
Winchester StaBALL 6.5	49.3	3,110	50.7	3,180	52.0	3,250	53.4	3,325	54.8	3,395	58,000	93%
Vihtavuori N555	50.1	3,080	51.5	3,155	52.9	3,230	54.3	3,305	55.7	3,380	58,000	101%
Accurate 4350	49.1	3,085	50.5	3,160	51.8	3,230	53.1	3,300	54.5	3,375	57,900	96%
Hodgdon Hybrid 100V	47.7	3,060	49.0	3,130	50.4	3,210	51.7	3,280	53.0	3,355	57,800	100%
Hodgdon H4350	47.7	3,060	49.0	3,130	50.4	3,205	51.7	3,275	53.0	3,350	58,000	90%
Norma MRP	51.8	3,040	53.2	3,115	54.6	3,190	56.1	3,270	57.5	3,345	57,800	101%
Norma URP	47.5	3,045	48.8	3,120	50.1	3,190	51.5	3,270	52.8	3,345	57,800	98%
Alliant Reloder 16	47.2	3,070	48.5	3,135	49.8	3,205	51.1	3,275	52.4	3,340	58,000	98%
Ramshot Hunter	49.4	3,045	50.8	3,120	52.1	3,190	53.5	3,260	54.9	3,335	57,800	98%
Alliant Reloder 19	50.5	3,005	51.9	3,085	53.3	3,160	54.7	3,235	56.1	3,315	57,700	100%
IMR 4350	47.7	3,030	49.0	3,095	50.4	3,170	51.7	3,240	53.0	3,310	58,000	96%
Hodgdon H4831SC	50.9	3,000	52.3	3,075	53.8	3,155	55.2	3,225	56.6	3,305	57,800	96%
Hodgdon H380	45.9	3,030	47.2	3,100	48.5	3,165	49.7	3,230	51.0	3,300	57,900	91%
Vihtavuori N160	49.1	3,010	50.5	3,080	51.9	3,155	53.2	3,225	54.6	3,295	58,000	100%
IMR 4955	49.6	2,985	51.0	3,060	52.4	3,135	53.7	3,205	55.1	3,285	57,900	93%
Shooters World SW4350	49.1	2,965	50.5	3,035	51.8	3,105	53.1	3,175	54.5	3,245	58,000	100%

120 gr Bullet · 25" barrel

COAL: 2.800" • Bullet length: 1.247" • Seat depth: 0.617" • Usable capacity: 56.8 / 64.9 gr H_2O

Powder	STEP 1 · 90%		STEP 2		STEP 3		STEP 4		STEP 5 · LIMIT			
	gr	fps	gr	fps	gr	fps	gr	fps	gr	fps	psi	Fill
Alliant Reloder 26	50.7	2,890	52.1	2,960	53.5	3,035	54.9	3,105	56.3	3,180	57,900	100%
Alliant Reloder 23	48.1	2,875	49.4	2,940	50.8	3,015	52.1	3,080	53.4	3,145	57,900	102%
Hodgdon SUPERFORMANCE	47.9	2,860	49.2	2,930	50.5	2,995	51.9	3,065	53.2	3,135	58,000	92%
Vihtavuori N560	50.0	2,865	51.4	2,930	52.8	3,000	54.2	3,065	55.6	3,135	57,900	102%
Ramshot Grand	52.7	2,805	54.2	2,880	55.6	2,950	57.0	3,025	58.5	3,100	57,300	105%
Vihtavuori N555	46.1	2,840	47.4	2,905	48.7	2,970	49.9	3,030	51.2	3,100	58,000	97%
Accurate 4350	45.7	2,830	47.0	2,900	48.3	2,965	49.5	3,030	50.8	3,095	57,800	94%
Hodgdon Hybrid 100V	44.8	2,825	46.0	2,890	47.3	2,960	48.5	3,025	49.8	3,095	57,900	98%
Reload Swiss RS76	53.1	2,805	54.6	2,875	56.0	2,945	57.5	3,015	59.0	3,090	58,000	105%
Winchester StaBALL 6.5	45.9	2,835	47.2	2,900	48.5	2,965	49.7	3,025	51.0	3,090	58,000	91%
Alliant Reloder 19	47.4	2,805	48.7	2,870	50.0	2,940	51.4	3,015	52.7	3,085	58,000	99%
Ramshot Hunter	46.2	2,800	47.5	2,870	48.8	2,935	50.0	2,995	51.3	3,060	57,800	96%
Vihtavuori N165	49.2	2,790	50.6	2,860	52.0	2,930	53.3	2,990	54.7	3,060	57,800	103%
Hodgdon H4831SC	47.7	2,780	49.0	2,845	50.4	2,920	51.7	2,985	53.0	3,050	57,800	94%
IMR 4451	44.7	2,780	46.0	2,845	47.2	2,910	48.5	2,975	49.7	3,040	57,800	91%
Vihtavuori N170	51.6	2,765	53.0	2,830	54.5	2,895	55.9	2,965	57.3	3,030	57,400	105%
Alliant Reloder 16	43.4	2,780	44.6	2,840	45.8	2,905	47.0	2,965	48.2	3,025	57,800	94%
IMR 4350	44.1	2,770	45.3	2,830	46.5	2,895	47.8	2,960	49.0	3,020	57,900	93%
Vihtavuori N160	45.5	2,755	46.8	2,815	48.0	2,875	49.3	2,940	50.5	3,005	57,800	96%
Winchester StaBALL HD	52.7	2,715	54.2	2,785	55.6	2,850	57.0	2,920	58.5	2,995	54,800	105%

130 gr Bullet · 25" barrel

COAL: 2.750" • Bullet length: 1.321" • Seat depth: 0.741" • Usable capacity: 55.5 / 64.9 gr H_2O

Powder	STEP 1 · 90%		STEP 2		STEP 3		STEP 4		STEP 5 · LIMIT			
	gr	fps	gr	fps	gr	fps	gr	fps	gr	fps	psi	Fill
Alliant Reloder 26	49.1	2,790	50.5	2,860	51.8	2,925	53.1	2,990	54.5	3,065	57,700	99%
Alliant Reloder 23	46.5	2,765	47.8	2,830	49.1	2,895	50.4	2,960	51.7	3,025	57,900	101%
Hodgdon SUPERFORMANCE	46.4	2,755	47.7	2,820	49.0	2,885	50.2	2,950	51.5	3,015	57,900	91%
Ramshot Grand	51.4	2,725	52.8	2,795	54.3	2,870	55.7	2,940	57.1	3,010	58,000	105%
Vihtavuori N560	48.2	2,750	49.5	2,810	50.9	2,880	52.2	2,940	53.5	3,005	58,000	101%
Vihtavuori N565	50.0	2,730	51.4	2,800	52.8	2,870	54.1	2,930	55.5	3,000	56,900	105%
Reload Swiss RS62	45.4	2,725	46.6	2,785	47.9	2,855	49.1	2,915	50.4	2,985	57,900	94%
Reload Swiss RS76	51.5	2,705	52.9	2,770	54.4	2,845	55.8	2,910	57.2	2,980	57,800	104%
Alliant Reloder 19	46.0	2,710	47.3	2,780	48.5	2,840	49.8	2,910	51.1	2,975	58,000	98%
Vihtavuori N570	50.9	2,690	52.3	2,760	53.8	2,830	55.2	2,900	56.6	2,970	54,900	105%
IMR 7828SSC	47.0	2,705	48.3	2,765	49.6	2,830	50.9	2,895	52.2	2,965	57,700	98%
Winchester Supreme 780	48.8	2,685	50.1	2,745	51.5	2,815	52.9	2,885	54.2	2,955	57,900	98%
Hodgdon Retumbo	50.4	2,675	51.8	2,745	53.2	2,810	54.6	2,880	56.0	2,950	54,600	105%
Hodgdon H4831SC	46.3	2,685	47.6	2,750	48.8	2,810	50.1	2,875	51.4	2,940	57,900	93%
Ramshot Magnum	51.1	2,660	52.5	2,730	54.0	2,800	55.4	2,870	56.8	2,940	57,900	103%
Vihtavuori N165	47.5	2,685	48.8	2,745	50.1	2,810	51.5	2,875	52.8	2,940	57,900	102%
Hodgdon H4350	42.5	2,685	43.7	2,750	44.9	2,810	46.0	2,865	47.2	2,930	57,900	86%
IMR 7828	47.0	2,665	48.3	2,730	49.6	2,795	50.9	2,860	52.2	2,925	57,900	95%
Vihtavuori N170	49.9	2,660	51.3	2,720	52.6	2,780	54.0	2,845	55.4	2,910	57,800	104%
Alliant Reloder 16	41.8	2,660	42.9	2,715	44.1	2,775	45.3	2,835	46.4	2,890	57,800	93%

140 gr Bullet · 25" barrel

COAL: 2.900" • Bullet length: 1.375" • Seat depth: 0.645" • Usable capacity: 56.4 / 64.9 gr H_2O

Powder	STEP 1 · 90%		STEP 2		STEP 3		STEP 4		STEP 5 · LIMIT			
	gr	fps	gr	fps	gr	fps	gr	fps	gr	fps	psi	Fill
Alliant Reloder 26	48.6	2,710	50.0	2,780	51.3	2,840	52.6	2,905	54.0	2,975	57,800	96%
Vihtavuori N570	51.4	2,690	52.8	2,755	54.3	2,830	55.7	2,895	57.1	2,965	57,800	104%
Ramshot Grand	51.1	2,660	52.5	2,725	54.0	2,795	55.4	2,865	56.8	2,935	57,700	103%
Hodgdon Retumbo	51.1	2,660	52.5	2,725	54.0	2,795	55.4	2,865	56.8	2,930	57,800	105%
Vihtavuori N565	49.3	2,670	50.7	2,735	52.0	2,795	53.4	2,860	54.8	2,930	57,900	102%
Alliant Reloder 23	46.0	2,675	47.3	2,740	48.5	2,795	49.8	2,860	51.1	2,925	58,000	98%
Hodgdon SUPERFORMANCE	45.8	2,665	47.1	2,730	48.3	2,790	49.6	2,850	50.9	2,915	57,900	88%
Hodgdon H1000	49.1	2,630	50.5	2,695	51.8	2,760	53.1	2,820	54.5	2,890	57,800	105%
Vihtavuori N560	47.1	2,640	48.4	2,700	49.7	2,760	51.0	2,820	52.3	2,880	57,900	97%
Ramshot Magnum	50.9	2,610	52.3	2,675	53.7	2,740	55.1	2,810	56.5	2,875	57,900	100%
Winchester Supreme 780	48.3	2,615	49.6	2,680	51.0	2,745	52.4	2,815	53.7	2,875	57,900	96%
Ramshot Hunter	44.2	2,605	45.4	2,665	46.7	2,725	47.9	2,785	49.1	2,845	57,800	92%
Vihtavuori N555	43.0	2,615	44.2	2,670	45.4	2,730	46.6	2,790	47.8	2,845	57,800	91%
Hodgdon H4831	45.7	2,590	47.0	2,650	48.3	2,715	49.5	2,770	50.8	2,835	57,900	97%
IMR 7828	46.4	2,590	47.7	2,655	49.0	2,715	50.2	2,775	51.5	2,835	57,900	92%
IMR 7977	48.7	2,570	50.1	2,635	51.4	2,700	52.8	2,765	54.1	2,830	57,700	104%
Vihtavuori N165	46.7	2,590	48.0	2,650	49.3	2,710	50.6	2,770	51.9	2,830	57,800	99%
Hodgdon H4350	41.8	2,590	42.9	2,645	44.1	2,705	45.3	2,765	46.4	2,820	57,800	83%
Vihtavuori N170	49.1	2,565	50.5	2,625	51.8	2,685	53.1	2,740	54.5	2,805	57,900	100%
Vihtavuori N160	43.2	2,545	44.4	2,600	45.6	2,655	46.8	2,715	48.0	2,770	57,900	92%

150 gr Bullet · 25" barrel

COAL: 2.930" • Bullet length: 1.484" • Seat depth: 0.724" • Usable capacity: 55.3 / 64.9 gr H_2O

Powder	STEP 1 · 90%		STEP 2		STEP 3		STEP 4		STEP 5 · LIMIT			
	gr	fps	gr	fps	gr	fps	gr	fps	gr	fps	psi	Fill
Vihtavuori N570	49.9	2,615	51.3	2,680	52.6	2,740	54.0	2,805	55.4	2,875	58,000	103%
Alliant Reloder 26	47.2	2,620	48.5	2,680	49.8	2,745	51.1	2,805	52.4	2,870	57,900	95%
Ramshot Grand	49.9	2,580	51.3	2,645	52.6	2,705	54.0	2,775	55.4	2,840	58,000	102%
Hodgdon Retumbo	49.8	2,580	51.2	2,640	52.5	2,705	53.9	2,770	55.3	2,835	57,900	104%
Vihtavuori N565	47.4	2,570	48.7	2,630	50.0	2,690	51.4	2,755	52.7	2,815	57,900	100%
Alliant Reloder 23	44.6	2,575	45.8	2,635	47.0	2,690	48.3	2,750	49.5	2,810	57,900	97%
Hodgdon SUPERFORMANCE	44.4	2,565	45.6	2,625	46.8	2,680	48.1	2,745	49.3	2,805	57,700	87%
Reload Swiss RS76	49.8	2,545	51.2	2,610	52.5	2,665	53.9	2,730	55.3	2,795	57,900	101%
Hodgdon H1000	47.7	2,540	49.0	2,600	50.4	2,670	51.7	2,730	53.0	2,790	57,900	104%
Ramshot Magnum	49.5	2,530	50.9	2,595	52.3	2,660	53.6	2,720	55.0	2,790	58,000	100%
Winchester StaBALL HD	50.5	2,530	51.9	2,595	53.3	2,660	54.7	2,725	56.1	2,790	57,900	103%
Alliant Reloder 22	44.6	2,540	45.9	2,600	47.1	2,660	48.4	2,725	49.6	2,780	57,900	95%
IMR 7828SSC	44.9	2,525	46.1	2,580	47.4	2,645	48.6	2,700	49.9	2,765	58,000	94%
Norma MRP	44.9	2,530	46.1	2,585	47.4	2,650	48.6	2,705	49.9	2,765	57,800	94%
Vihtavuori N560	45.3	2,530	46.5	2,585	47.8	2,640	49.0	2,695	50.3	2,755	57,700	95%
IMR 4955	43.3	2,500	44.5	2,560	45.7	2,620	46.9	2,675	48.1	2,735	57,800	87%
IMR 7977	47.3	2,485	48.6	2,545	50.0	2,610	51.3	2,670	52.6	2,735	57,700	103%
Hodgdon H4831	44.3	2,495	45.5	2,550	46.8	2,615	48.0	2,670	49.2	2,730	57,900	95%
Ramshot Hunter	42.8	2,500	44.0	2,560	45.2	2,615	46.4	2,675	47.6	2,730	57,900	91%
Vihtavuori N165	45.2	2,490	46.5	2,550	47.7	2,605	49.0	2,665	50.2	2,720	58,000	97%

6.5-300 Weatherby Magnum

Roy Weatherby experimented with a 6.5mm version of his .300 Weatherby Magnum during the 1950s. Similar designs circulated for decades as wildcats. Weatherby introduced the 6.5-300 Weatherby Magnum commercially in 2016. It was the company's first new cartridge in nearly 20 years. The case is the belted .300 Weatherby Magnum necked down to accept .264-inch bullets. It retains the company's characteristic double-radius shoulder.

Weatherby's initial factory loads included a 127-grain Barnes LRX bullet at about 3,531 fps, a 130-grain Swift Scirocco at about 3,476 fps and a 140-grain Swift A-Frame at about 3,395 fps. At its introduction it was promoted as the fastest production 6.5mm cartridge. The 6.5-300 is intended for long-range hunting of open-country game such as pronghorn, deer and sheep. It was launched in Weatherby's redesigned Mark V rifles. Weatherby remains the principal source of rifles and loaded ammunition. Brass is available from several makers.

Cartridge specifications	
Bullet Diameter	**0.264" (6.71 mm)**
Max Case Length	**2.825" (71.75 mm)**
Case Trim Length	**2.815" (71.50 mm)**
Max COAL	**3.600" (91.44 mm)**
Primer Pocket	**Large Rifle**
Standard Twist	**1:8"**
Case Capacity	**97.5 gr H_2O**
Max Pressure	**65,000 psi (SAAMI)**

140 gr Bullet · 25" barrel

COAL: 3.560" • Bullet length: 1.338" • Seat depth: 0.603" • Usable capacity: 89.5 / 97.5 gr H_2O

Powder	STEP 1 · 90%		STEP 2		STEP 3		STEP 4		STEP 5 · LIMIT			
	gr	fps	gr	fps	gr	fps	gr	fps	gr	fps	psi	Fill
Hodgdon US 869	82.2	3,070	84.5	3,155	86.8	3,245	89.0	3,325	91.3	3,415	64,300	105%
Alliant Reloder 50	75.2	3,035	77.3	3,115	79.4	3,200	81.5	3,285	83.6	3,370	64,900	105%
IMR 8133	73.3	3,065	75.3	3,135	77.3	3,210	79.4	3,290	81.4	3,365	64,900	95%
Ramshot Grand	71.9	3,065	73.9	3,140	75.9	3,210	77.9	3,285	79.9	3,360	64,900	91%
Hodgdon Retumbo	71.5	3,070	73.5	3,140	75.5	3,210	77.4	3,280	79.4	3,355	64,800	92%
Vihtavuori N568	70.9	3,045	72.9	3,120	74.8	3,195	76.8	3,270	78.8	3,350	64,900	91%
Hodgdon H50BMG	79.9	3,025	82.1	3,105	84.3	3,180	86.6	3,265	88.8	3,345	64,800	101%
Ramshot LRT	78.0	3,030	80.2	3,110	82.3	3,185	84.5	3,265	86.7	3,345	65,000	99%
Hodgdon H1000	69.0	3,025	70.9	3,090	72.8	3,160	74.8	3,235	76.7	3,305	64,900	93%
Alliant Reloder 25	68.7	3,020	70.6	3,090	72.5	3,160	74.4	3,230	76.3	3,300	64,900	93%
Alliant Reloder 33	76.6	2,995	78.7	3,070	80.8	3,145	83.0	3,225	85.1	3,300	64,800	103%
Ramshot Magnum	70.3	2,990	72.3	3,065	74.2	3,130	76.1	3,205	78.1	3,275	64,900	87%
IMR 4831	62.8	3,005	64.5	3,070	66.3	3,135	68.0	3,205	69.8	3,270	64,900	84%
Vihtavuori N570	66.8	2,975	68.7	3,045	70.5	3,110	72.3	3,180	74.2	3,250	64,800	85%
Reload Swiss RS62	62.1	2,980	63.8	3,045	65.5	3,110	67.3	3,180	69.0	3,245	64,900	80%
Winchester StaBALL HD	70.7	2,955	72.7	3,025	74.7	3,100	76.6	3,165	78.6	3,240	64,800	89%
Reload Swiss RS70	63.9	2,965	65.7	3,035	67.5	3,100	69.2	3,165	71.0	3,235	64,800	80%
IMR 7977	68.0	2,950	69.9	3,020	71.8	3,090	73.7	3,155	75.6	3,230	64,900	92%
Winchester Supreme 780	66.0	2,950	67.8	3,015	69.7	3,090	71.5	3,155	73.3	3,225	64,900	82%
Vihtavuori 24N41	72.2	2,925	74.2	2,995	76.2	3,070	78.2	3,140	80.2	3,215	65,000	91%

6.5mm BR Remington

The 6.5mm BR Remington is a wildcat member of the BR family of short small-primer benchrest cartridges. It is made by necking up 6mm BR Remington brass to accept .264-inch bullets. It can also be made by necking down 7mm BR Remington cases. Unlike the 6mm BR and 7mm BR it has not been standardized as a factory chambering. Careful attention to headspace and case resizing is therefore important.

The 6.5mm BR was developed primarily for metallic silhouette shooting. In that sport it offers enough power to topple steel targets with modest recoil. It is often used in bolt-action single-shot pistols such as the Remington XP-100 as well as in rifles. Bullets of 140 to 142 grains are favored for the farthest silhouette targets. Bullets of 100 to 120 grains reduce recoil further. The cartridge also suits smaller big game such as whitetail deer at moderate ranges. With light bullets it works for short-range varmint shooting.

Cartridge specifications	
Bullet Diameter	**0.264" (6.71 mm)**
Max Case Length	**1.540" (39.12 mm)**
Case Trim Length	**1.530" (38.86 mm)**
Max COAL	**2.250" (57.15 mm)**
Primer Pocket	**Small Rifle**
Standard Twist	**1:8"**
Case Capacity	**38.6 gr H_2O**
Max Pressure	**60,000 psi (SAAMI)**

85 gr Bullet · 25" barrel

COAL: 2.075" • Bullet length: 0.828" • Seat depth: 0.293" • Usable capacity: 34.5 / 38.6 gr H_2O

Powder	STEP 1 · 90%		STEP 2		STEP 3		STEP 4		STEP 5 · LIMIT			
	gr	fps	gr	fps	gr	fps	gr	fps	gr	fps	psi	Fill
Hodgdon CFE BLK	28.6	3,020	29.4	3,090	30.2	3,155	31.0	3,220	31.8	3,290	59,500	95%
Hodgdon Leverevolution	34.1	2,990	35.0	3,060	36.0	3,135	37.0	3,215	37.9	3,285	57,600	105%
Accurate 2460	31.9	2,950	32.8	3,020	33.6	3,080	34.5	3,150	35.4	3,225	59,900	103%
Alliant Power Pro 1200-R	29.3	2,960	30.1	3,030	30.9	3,095	31.7	3,160	32.5	3,225	59,900	96%
Reload Swiss RS40	30.1	2,955	30.9	3,020	31.8	3,095	32.6	3,160	33.4	3,225	59,600	103%
Norma 200	28.5	2,950	29.3	3,015	30.1	3,080	30.9	3,150	31.7	3,215	59,600	100%
Shooters World AR Plus	30.1	2,940	30.9	3,005	31.8	3,080	32.6	3,145	33.4	3,210	59,800	98%
Accurate 2230	31.1	2,925	32.0	2,990	32.9	3,060	33.7	3,125	34.6	3,190	59,700	101%
Accurate 2200	28.7	2,910	29.5	2,975	30.3	3,040	31.1	3,105	31.9	3,170	58,700	105%
Ramshot X-Terminator	30.7	2,910	31.6	2,975	32.4	3,040	33.3	3,105	34.1	3,170	60,000	100%
IMR 3031	30.2	2,885	31.1	2,960	31.9	3,025	32.8	3,100	33.6	3,165	59,600	104%
Shooters World The Patriot	30.3	2,895	31.2	2,965	32.0	3,025	32.9	3,100	33.7	3,160	59,900	101%
Accurate 2495	31.5	2,870	32.4	2,940	33.3	3,015	34.1	3,080	35.0	3,150	59,600	102%
Shooters World Tactical Rifle	30.9	2,865	31.8	2,935	32.6	3,000	33.4	3,065	34.3	3,135	60,000	102%
Accurate 2015	29.3	2,860	30.1	2,925	31.0	3,000	31.8	3,065	32.6	3,130	59,600	98%
Hodgdon H322	29.3	2,870	30.1	2,935	30.9	3,000	31.7	3,065	32.5	3,130	59,800	100%
Accurate LT-32	28.5	2,865	29.3	2,930	30.1	2,995	30.9	3,060	31.7	3,125	59,900	101%
Alliant Reloder 7	27.0	2,875	27.8	2,940	28.5	3,000	29.3	3,065	30.0	3,125	59,600	92%
Hodgdon H335	30.7	2,845	31.6	2,915	32.4	2,980	33.3	3,050	34.1	3,110	59,700	98%
IMR 4198	25.7	2,805	26.4	2,860	27.1	2,920	27.9	2,990	28.6	3,045	59,600	100%

100 gr Bullet · 25" barrel

COAL: 2.196" • Bullet length: 0.920" • Seat depth: 0.264" • Usable capacity: 34.9 / 38.6 gr H_2O

Powder	STEP 1 · 90%		STEP 2		STEP 3		STEP 4		STEP 5 · LIMIT			
	gr	fps	gr	fps	gr	fps	gr	fps	gr	fps	psi	Fill
Hodgdon Leverevolution	33.8	2,870	34.7	2,935	35.6	3,000	36.6	3,075	37.5	3,145	59,900	103%
Hodgdon H4895	31.3	2,810	32.2	2,875	33.0	2,935	33.9	3,000	34.8	3,070	59,900	103%
Vihtavuori N530	30.1	2,820	30.9	2,880	31.8	2,945	32.6	3,010	33.4	3,070	59,900	103%
IMR 4895	31.9	2,785	32.8	2,850	33.6	2,910	34.5	2,975	35.4	3,045	58,700	105%
Hodgdon CFE BLK	27.6	2,780	28.4	2,845	29.1	2,900	29.9	2,960	30.7	3,025	59,700	90%
Hodgdon BL-C(2)	32.8	2,750	33.7	2,815	34.6	2,885	35.5	2,950	36.4	3,020	59,700	105%
Hodgdon Varget	31.7	2,750	32.6	2,815	33.5	2,885	34.3	2,945	35.2	3,015	59,000	105%
Shooters World Match Rifle	31.9	2,755	32.8	2,820	33.6	2,880	34.5	2,945	35.4	3,015	59,600	104%
IMR 8208 XBR	30.4	2,750	31.3	2,820	32.1	2,875	32.9	2,935	33.8	3,005	58,200	105%
Alliant Power Pro Varmint	31.1	2,735	32.0	2,800	32.9	2,865	33.7	2,925	34.6	2,995	60,000	105%
Accurate 2495	30.8	2,725	31.7	2,790	32.5	2,850	33.4	2,920	34.2	2,980	59,800	99%
Shooters World AR Plus	29.2	2,740	30.0	2,800	30.8	2,860	31.6	2,920	32.4	2,980	59,700	94%
Accurate 2460	30.5	2,730	31.4	2,790	32.2	2,850	33.0	2,905	33.9	2,975	59,800	97%
Shooters World Tactical Rifle	30.0	2,695	30.8	2,755	31.6	2,815	32.5	2,885	33.3	2,945	59,700	98%
Vihtavuori N133	28.7	2,705	29.5	2,765	30.3	2,825	31.1	2,885	31.9	2,945	59,200	105%
Accurate 2015	28.6	2,680	29.4	2,740	30.2	2,800	31.0	2,860	31.8	2,925	59,700	94%
Accurate 2230	29.6	2,690	30.4	2,745	31.3	2,810	32.1	2,865	32.9	2,925	59,600	95%
Hodgdon H322	28.4	2,680	29.2	2,740	30.0	2,800	30.8	2,860	31.6	2,925	59,900	96%
Hodgdon H335	29.9	2,675	30.7	2,735	31.6	2,800	32.4	2,860	33.2	2,920	60,000	94%
Ramshot X-Terminator	29.3	2,680	30.1	2,735	30.9	2,795	31.7	2,850	32.5	2,910	59,800	94%

107 gr Bullet · 25" barrel

COAL: 2.250" • Bullet length: 1.238" • Seat depth: 0.528" • Usable capacity: 31.7 / 38.6 gr H_2O

Powder	STEP 1 · 90%		STEP 2		STEP 3		STEP 4		STEP 5 · LIMIT			
	gr	fps	gr	fps	gr	fps	gr	fps	gr	fps	psi	Fill
Hodgdon Leverevolution	31.2	2,690	32.1	2,760	33.0	2,830	33.8	2,890	34.7	2,960	59,700	105%
Vihtavuori N530	27.8	2,650	28.6	2,710	29.4	2,775	30.1	2,830	30.9	2,890	59,100	105%
Hodgdon H4895	28.9	2,640	29.7	2,700	30.5	2,760	31.3	2,825	32.1	2,885	59,300	105%
Hodgdon CFE BLK	25.7	2,625	26.4	2,680	27.1	2,740	27.8	2,795	28.5	2,850	59,800	93%
Alliant AR-Comp	27.7	2,605	28.5	2,665	29.3	2,730	30.0	2,780	30.8	2,845	59,600	104%
Reload Swiss RS40	27.1	2,595	27.9	2,660	28.6	2,715	29.4	2,780	30.1	2,835	59,700	101%
Alliant Power Pro 1200-R	26.0	2,580	26.7	2,635	27.4	2,690	28.2	2,755	28.9	2,810	59,600	93%
Accurate 2495	28.4	2,555	29.2	2,615	30.0	2,680	30.8	2,740	31.6	2,805	59,900	100%
Accurate 2460	28.3	2,570	29.1	2,630	29.9	2,690	30.6	2,740	31.4	2,800	59,900	99%
Hodgdon BL-C(2)	29.8	2,540	30.6	2,600	31.5	2,670	32.3	2,735	33.1	2,795	56,800	105%
IMR 3031	27.2	2,560	27.9	2,615	28.7	2,675	29.4	2,730	30.2	2,795	59,900	102%
Alliant Power Pro Varmint	28.3	2,535	29.1	2,595	29.9	2,655	30.6	2,710	31.4	2,770	56,800	105%
Hodgdon Benchmark	27.0	2,540	27.8	2,600	28.5	2,655	29.3	2,715	30.0	2,770	59,900	104%
Accurate 2230	27.5	2,535	28.3	2,590	29.1	2,650	29.8	2,705	30.6	2,765	59,800	98%
Shooters World The Patriot	27.1	2,525	27.9	2,585	28.6	2,640	29.4	2,700	30.1	2,755	60,000	99%
Accurate 2015	26.5	2,520	27.2	2,575	27.9	2,630	28.7	2,695	29.4	2,750	59,700	96%
Hodgdon H322	26.3	2,520	27.0	2,575	27.8	2,640	28.5	2,695	29.2	2,750	59,900	98%
Hodgdon H335	27.6	2,505	28.4	2,570	29.1	2,620	29.9	2,680	30.7	2,745	59,600	96%
Ramshot X-Terminator	27.1	2,515	27.9	2,575	28.6	2,630	29.4	2,690	30.1	2,740	59,700	96%
Alliant Reloder 7	23.9	2,485	24.6	2,540	25.3	2,595	25.9	2,645	26.6	2,700	59,600	89%

120 gr Bullet · 25" barrel

COAL: 2.250" • Bullet length: 1.170" • Seat depth: 0.460" • Usable capacity: 32.5 / 38.6 gr H_2O

Powder	STEP 1 · 90%		STEP 2		STEP 3		STEP 4		STEP 5 · LIMIT			
	gr	fps	gr	fps	gr	fps	gr	fps	gr	fps	psi	Fill
Hodgdon Leverevolution	30.9	2,575	31.8	2,640	32.6	2,695	33.4	2,755	34.3	2,820	59,600	101%
Accurate 2520	29.8	2,505	30.6	2,565	31.5	2,630	32.3	2,685	33.1	2,745	58,900	105%
IMR 4895	29.2	2,505	30.0	2,560	30.8	2,620	31.6	2,680	32.4	2,735	59,900	103%
Hodgdon H4895	28.4	2,495	29.2	2,555	30.0	2,615	30.8	2,670	31.6	2,730	59,500	101%
Vihtavuori N140	29.6	2,485	30.4	2,545	31.3	2,610	32.1	2,665	32.9	2,725	59,700	103%
Winchester 748	29.8	2,485	30.6	2,545	31.5	2,610	32.3	2,670	33.1	2,725	58,900	105%
Hodgdon Varget	29.1	2,485	29.9	2,540	30.7	2,600	31.5	2,660	32.3	2,720	59,900	103%
Hodgdon BL-C(2)	30.1	2,475	30.9	2,535	31.8	2,600	32.6	2,660	33.4	2,715	59,500	103%
Shooters World Match Rifle	29.3	2,480	30.1	2,535	30.9	2,595	31.7	2,655	32.5	2,715	59,800	103%
IMR 8208 XBR	27.8	2,465	28.6	2,520	29.4	2,580	30.1	2,630	30.9	2,690	59,900	103%
Shooters World The Creed	29.4	2,435	30.2	2,490	31.1	2,555	31.9	2,615	32.7	2,675	59,200	105%
Vihtavuori N135	27.6	2,450	28.4	2,510	29.1	2,560	29.9	2,615	30.7	2,675	59,700	103%
Norma 202	28.3	2,445	29.1	2,505	29.9	2,560	30.6	2,610	31.4	2,670	58,500	105%
Alliant AR-Comp	27.0	2,435	27.8	2,495	28.5	2,545	29.3	2,605	30.0	2,655	59,600	99%
Shooters World AR Plus	26.6	2,425	27.4	2,485	28.1	2,535	28.9	2,595	29.6	2,645	60,000	92%
IMR 4166	27.6	2,395	28.4	2,450	29.1	2,505	29.9	2,560	30.7	2,620	56,900	105%
Accurate 2460	27.5	2,400	28.3	2,460	29.0	2,510	29.8	2,565	30.5	2,615	59,500	94%
Vihtavuori N133	26.0	2,390	26.7	2,440	27.4	2,495	28.2	2,550	28.9	2,605	59,800	102%
Accurate 2015	26.2	2,385	26.9	2,435	27.6	2,485	28.4	2,545	29.1	2,600	59,900	93%
Hodgdon Benchmark	26.3	2,385	27.0	2,435	27.8	2,495	28.5	2,545	29.2	2,595	59,600	99%

140 gr Bullet · 25" barrel

COAL: 2.250" • Bullet length: 1.283" • Seat depth: 0.573" • Usable capacity: 31.1 / 38.6 gr H_2O

Powder	STEP 1 · 90%		STEP 2		STEP 3		STEP 4		STEP 5 · LIMIT			
	gr	fps	gr	fps	gr	fps	gr	fps	gr	fps	psi	Fill
Hodgdon Leverevolution	29.0	2,365	29.8	2,420	30.6	2,480	31.4	2,535	32.2	2,590	59,700	99%
Hodgdon CFE 223	28.8	2,295	29.6	2,350	30.4	2,405	31.2	2,460	32.0	2,520	59,500	105%
Norma 201	26.4	2,305	27.1	2,355	27.9	2,415	28.6	2,465	29.3	2,520	59,700	104%
Winchester 748	28.1	2,300	28.9	2,355	29.6	2,405	30.4	2,460	31.2	2,515	59,600	103%
Hodgdon BL-C(2)	28.4	2,290	29.2	2,345	29.9	2,395	30.7	2,450	31.5	2,510	59,800	102%
Reload Swiss RS52	28.0	2,290	28.8	2,345	29.6	2,405	30.3	2,450	31.1	2,510	58,300	105%
Accurate 2520	27.9	2,290	28.7	2,345	29.4	2,395	30.2	2,450	31.0	2,505	59,500	102%
Hodgdon H4895	26.6	2,285	27.3	2,335	28.1	2,390	28.8	2,440	29.5	2,490	59,900	98%
Hodgdon Varget	27.2	2,280	27.9	2,330	28.7	2,385	29.4	2,435	30.2	2,490	59,900	101%
Vihtavuori N140	27.5	2,265	28.3	2,325	29.1	2,380	29.8	2,425	30.6	2,485	59,700	100%
Vihtavuori N540	27.6	2,270	28.4	2,325	29.1	2,375	29.9	2,425	30.7	2,480	57,100	105%
IMR 4320	27.4	2,245	28.1	2,295	28.9	2,350	29.6	2,400	30.4	2,460	59,500	98%
IMR 4064	26.6	2,240	27.4	2,295	28.1	2,345	28.9	2,400	29.6	2,450	60,000	102%
Alliant Power Pro Varmint	26.6	2,235	27.3	2,285	28.1	2,340	28.8	2,390	29.5	2,440	59,900	100%
IMR 4166	26.4	2,230	27.1	2,280	27.9	2,335	28.6	2,385	29.3	2,440	59,600	104%
IMR 8208 XBR	25.7	2,235	26.4	2,285	27.1	2,330	27.9	2,390	28.6	2,440	59,600	100%
Norma 202	26.4	2,230	27.1	2,280	27.9	2,335	28.6	2,385	29.3	2,435	59,600	102%
Reload Swiss RS50	28.0	2,215	28.8	2,270	29.6	2,325	30.3	2,375	31.1	2,430	56,900	105%
Vihtavuori N135	25.5	2,215	26.2	2,265	26.9	2,315	27.6	2,360	28.3	2,410	59,600	99%
Accurate 2015	24.5	2,165	25.2	2,220	25.9	2,270	26.5	2,310	27.2	2,365	59,600	91%

6.5mm Carcano

Italy adopted the 6.5x52mm Carcano cartridge in 1890. It entered service with the Model 1891 rifle. The rifle was named for Salvatore Carcano of the Turin arsenal. He designed its action. The cartridge was developed at the Royal Pyrotechnical Laboratory of Bologna under a small-arms commission established in 1888. It uses a rimless bottlenecked case. Its bullet is about .268 inch in diameter. This is larger than the .264-inch bullets used in most 6.5mm cartridges.

The standard military load used a round-nose full-metal-jacket bullet of about 160 grains at roughly 2,300 fps. The cartridge served Italy in World War I and World War II. It also saw use in several earlier and intervening conflicts. Service continued until about 1970. Today it is of interest mainly to collectors and shooters of surplus rifles. Some current factory ammunition uses .264-inch bullets. These can reduce accuracy in the larger Carcano bore. Prvi Partizan offers a load with larger bullets. Correctly sized bullets for handloading can be hard to find.

Cartridge specifications	
Bullet Diameter	**0.264" (6.71 mm)**
Max Case Length	**2.067" (52.50 mm)**
Case Trim Length	**2.057" (52.25 mm)**
Max COAL	**3.012" (76.50 mm)**
Primer Pocket	**Large Rifle**
Standard Twist	**1:8"**
Case Capacity	**48.7 gr H_2O**
Max Pressure	**2,850 bar / 41,336 psi (C.I.P.)**

85 gr Bullet · 25" barrel

COAL: 2.631" • Bullet length: 0.828" • Seat depth: 0.264" • Usable capacity: 45.0 / 48.7 gr H_2O

Powder	STEP 1 · 90%		STEP 2		STEP 3		STEP 4		STEP 5 · LIMIT			
	gr	fps	gr	fps	gr	fps	gr	fps	gr	fps	psi	Fill
Vihtavuori N550	37.0	2,695	38.0	2,755	39.0	2,815	40.1	2,880	41.1	2,940	41,200	96%
Hodgdon Leverevolution	34.4	2,685	35.4	2,755	36.3	2,815	37.3	2,880	38.2	2,935	41,100	81%
Vihtavuori N540	33.8	2,680	34.7	2,735	35.6	2,790	36.6	2,850	37.5	2,905	41,100	88%
Accurate 2520	33.0	2,645	33.9	2,705	34.9	2,770	35.8	2,825	36.7	2,880	41,300	84%
Hodgdon CFE 223	34.5	2,630	35.5	2,695	36.4	2,755	37.3	2,810	38.3	2,870	41,100	87%
Alliant Reloder 16	37.2	2,610	38.2	2,670	39.3	2,740	40.3	2,800	41.3	2,865	41,300	102%
Winchester StaBALL 6.5	38.1	2,610	39.1	2,670	40.2	2,735	41.3	2,800	42.3	2,860	41,300	95%
Ramshot Big Game	36.1	2,600	37.1	2,660	38.1	2,720	39.1	2,785	40.1	2,845	41,300	91%
IMR 4895	32.3	2,610	33.2	2,665	34.1	2,725	35.0	2,785	35.9	2,840	41,300	82%
Alliant Power Pro 2000-MR	35.0	2,590	36.0	2,655	37.0	2,715	37.9	2,770	38.9	2,835	41,300	91%
Vihtavuori N150	33.4	2,600	34.3	2,655	35.3	2,720	36.2	2,780	37.1	2,835	41,200	92%
Hodgdon H380	35.5	2,570	36.5	2,630	37.5	2,695	38.4	2,750	39.4	2,810	41,100	93%
Vihtavuori N135	30.4	2,585	31.3	2,645	32.1	2,695	32.9	2,745	33.8	2,805	41,300	81%
Hodgdon Varget	32.1	2,560	33.0	2,620	33.9	2,680	34.8	2,740	35.7	2,800	41,100	82%
IMR 4064	32.1	2,575	33.0	2,630	33.9	2,690	34.8	2,745	35.7	2,800	41,300	85%
Accurate 2700	36.0	2,540	37.0	2,605	38.0	2,665	39.0	2,725	40.0	2,785	41,300	90%
IMR 4320	32.3	2,530	33.2	2,590	34.1	2,650	35.0	2,710	35.9	2,770	41,200	80%
Ramshot Hunter	37.8	2,505	38.8	2,565	39.9	2,630	41.0	2,700	42.0	2,760	41,300	99%
Hodgdon H414	36.0	2,510	37.0	2,570	38.0	2,635	39.0	2,695	40.0	2,755	41,300	90%
Winchester 760	36.0	2,510	37.0	2,570	38.0	2,630	39.0	2,690	40.0	2,755	41,200	91%

100 gr Bullet · 25" barrel

COAL: 2.749" • Bullet length: 0.946" • Seat depth: 0.264" • Usable capacity: 45.0 / 48.7 gr H_2O

Powder	STEP 1 · 90%		STEP 2		STEP 3		STEP 4		STEP 5 · LIMIT			
	gr	fps	gr	fps	gr	fps	gr	fps	gr	fps	psi	Fill
Vihtavuori N550	34.8	2,495	35.8	2,550	36.8	2,610	37.7	2,660	38.7	2,715	41,300	90%
Winchester StaBALL 6.5	36.7	2,465	37.7	2,525	38.8	2,585	39.8	2,645	40.8	2,700	41,300	91%
Alliant Reloder 16	35.3	2,455	36.3	2,510	37.3	2,570	38.2	2,620	39.2	2,680	41,300	97%
Vihtavuori N560	40.7	2,435	41.8	2,495	43.0	2,560	44.1	2,620	45.2	2,680	39,300	105%
Alliant Reloder 23	38.1	2,435	39.1	2,495	40.2	2,555	41.3	2,620	42.3	2,675	41,200	102%
Hodgdon CFE 223	33.1	2,450	34.0	2,505	35.0	2,570	35.9	2,620	36.8	2,675	41,300	83%
Accurate 4350	36.6	2,420	37.6	2,480	38.7	2,545	39.7	2,605	40.7	2,665	41,100	94%
Hodgdon BL-C(2)	32.6	2,435	33.5	2,495	34.4	2,550	35.3	2,605	36.2	2,665	41,200	81%
Hodgdon H380	34.1	2,420	35.0	2,475	36.0	2,530	37.0	2,590	37.9	2,645	41,300	89%
Alliant Reloder 15	31.5	2,425	32.4	2,480	33.3	2,535	34.1	2,585	35.0	2,640	41,300	83%
IMR 4350	35.7	2,390	36.7	2,450	37.7	2,510	38.7	2,570	39.7	2,630	41,100	95%
Ramshot Hunter	36.5	2,385	37.5	2,440	38.5	2,495	39.6	2,560	40.6	2,620	41,200	96%
Vihtavuori N160	36.5	2,365	37.5	2,425	38.5	2,480	39.6	2,545	40.6	2,600	41,200	98%
IMR 4064	30.4	2,385	31.3	2,440	32.1	2,490	32.9	2,535	33.8	2,590	41,300	80%
Alliant Power Pro 4000-MR	36.5	2,350	37.5	2,405	38.5	2,465	39.6	2,525	40.6	2,585	41,200	92%
Hodgdon Hybrid 100V	34.7	2,345	35.7	2,410	36.6	2,465	37.5	2,515	38.5	2,580	41,200	96%
Norma URP	34.8	2,340	35.8	2,400	36.8	2,460	37.7	2,515	38.7	2,575	41,300	94%
Norma MRP	37.9	2,330	39.0	2,395	40.0	2,450	41.0	2,505	42.1	2,570	41,300	97%
Vihtavuori N165	39.0	2,320	40.1	2,385	41.1	2,435	42.2	2,500	43.3	2,560	41,200	103%
Hodgdon H4831	37.7	2,280	38.8	2,340	39.8	2,400	40.9	2,460	41.9	2,515	41,200	100%

120 gr Bullet · 25" barrel

COAL: 2.835" • Bullet length: 1.170" • Seat depth: 0.402" • Usable capacity: 43.5 / 48.7 gr H_2O

Powder	STEP 1 · 90%		STEP 2		STEP 3		STEP 4		STEP 5 · LIMIT			
	gr	fps	gr	fps	gr	fps	gr	fps	gr	fps	psi	Fill
Vihtavuori N560	38.7	2,315	39.8	2,370	40.9	2,430	41.9	2,480	43.0	2,540	41,200	103%
Alliant Reloder 23	35.7	2,260	36.7	2,315	37.7	2,370	38.7	2,425	39.7	2,480	41,200	99%
Alliant Reloder 26	37.7	2,245	38.8	2,305	39.8	2,360	40.9	2,420	41.9	2,475	41,200	97%
Winchester StaBALL 6.5	34.3	2,265	35.3	2,320	36.2	2,370	37.1	2,420	38.1	2,475	41,100	88%
Accurate 4350	34.4	2,255	35.4	2,315	36.3	2,365	37.3	2,420	38.2	2,470	41,300	92%
Hodgdon SUPERFORMANCE	35.6	2,230	36.6	2,285	37.5	2,335	38.5	2,395	39.5	2,450	41,200	89%
Vihtavuori N555	34.9	2,235	35.9	2,290	36.8	2,340	37.8	2,395	38.8	2,450	41,200	96%
Vihtavuori N170	39.4	2,220	40.5	2,270	41.6	2,325	42.7	2,380	43.8	2,435	40,600	105%
IMR 4350	33.3	2,220	34.2	2,270	35.1	2,320	36.1	2,380	37.0	2,430	41,300	91%
Hodgdon H4350	32.7	2,210	33.6	2,265	34.5	2,315	35.4	2,370	36.3	2,420	41,200	84%
Ramshot Hunter	34.3	2,210	35.3	2,265	36.2	2,315	37.1	2,365	38.1	2,420	41,200	93%
Alliant Reloder 22	35.7	2,180	36.7	2,235	37.7	2,290	38.7	2,350	39.7	2,405	41,300	97%
Hodgdon H380	31.6	2,200	32.5	2,255	33.4	2,305	34.2	2,350	35.1	2,400	41,100	86%
Reload Swiss RS76	39.5	2,165	40.6	2,220	41.7	2,280	42.8	2,335	43.9	2,395	41,300	102%
Vihtavuori N160	34.0	2,190	35.0	2,245	35.9	2,290	36.8	2,340	37.8	2,395	41,200	94%
Hodgdon Retumbo	39.4	2,150	40.5	2,210	41.6	2,265	42.7	2,325	43.8	2,385	41,000	105%
IMR 4831	33.9	2,150	34.9	2,205	35.8	2,260	36.8	2,315	37.7	2,370	41,300	93%
Alliant Reloder 19	34.7	2,150	35.7	2,205	36.6	2,255	37.5	2,305	38.5	2,365	41,100	94%
Hodgdon H1000	37.8	2,135	38.8	2,190	39.9	2,250	41.0	2,310	42.0	2,365	41,000	105%
Hodgdon H4831	35.4	2,145	36.4	2,200	37.3	2,250	38.3	2,305	39.3	2,360	41,200	97%

140 gr Bullet · 25" barrel

COAL: 2.900" • Bullet length: 1.297" • Seat depth: 0.463" • Usable capacity: 42.8 / 48.7 gr H_2O

Powder	STEP 1 · 90%		STEP 2		STEP 3		STEP 4		STEP 5 · LIMIT			
	gr	fps	gr	fps	gr	fps	gr	fps	gr	fps	psi	Fill
Vihtavuori N560	36.5	2,165	37.5	2,215	38.5	2,265	39.5	2,315	40.5	2,365	41,200	99%
Alliant Reloder 26	36.1	2,135	37.1	2,185	38.1	2,240	39.1	2,290	40.1	2,345	41,300	94%
Alliant Reloder 23	34.1	2,125	35.0	2,170	36.0	2,225	37.0	2,275	37.9	2,325	41,300	96%
Accurate 4350	32.7	2,110	33.6	2,160	34.5	2,210	35.4	2,260	36.3	2,305	41,300	89%
Hodgdon SUPERFORMANCE	33.9	2,095	34.9	2,150	35.8	2,200	36.8	2,255	37.7	2,300	41,300	86%
Vihtavuori N555	32.9	2,105	33.8	2,155	34.7	2,200	35.6	2,250	36.5	2,300	41,100	92%
Winchester StaBALL 6.5	32.6	2,100	33.5	2,150	34.4	2,200	35.3	2,245	36.2	2,295	41,200	85%
Vihtavuori N565	37.4	2,080	38.5	2,135	39.5	2,185	40.5	2,235	41.6	2,290	41,100	102%
Alliant Reloder 22	34.1	2,070	35.0	2,120	36.0	2,175	37.0	2,225	37.9	2,275	41,300	94%
Vihtavuori N170	37.3	2,075	38.3	2,120	39.3	2,170	40.4	2,220	41.4	2,270	41,300	101%
Vihtavuori N570	38.5	2,050	39.6	2,105	40.6	2,155	41.7	2,210	42.8	2,270	41,300	103%
IMR 4350	31.4	2,065	32.3	2,115	33.1	2,160	34.0	2,205	34.9	2,255	41,300	88%
Hodgdon H1000	36.3	2,045	37.3	2,095	38.3	2,145	39.3	2,200	40.3	2,250	41,200	102%
Hodgdon H4350	30.7	2,050	31.6	2,105	32.4	2,150	33.3	2,195	34.1	2,240	41,100	80%
Alliant Reloder 19	33.1	2,035	34.0	2,085	35.0	2,140	35.9	2,190	36.8	2,235	41,100	91%
IMR 4831	32.4	2,035	33.3	2,085	34.2	2,135	35.1	2,185	36.0	2,230	41,100	90%
Hodgdon H4831	33.7	2,030	34.6	2,080	35.5	2,125	36.5	2,180	37.4	2,225	41,100	94%
Vihtavuori N160	32.1	2,035	33.0	2,080	33.9	2,130	34.8	2,175	35.7	2,225	41,100	91%
Winchester StaBALL HD	38.4	2,010	39.5	2,065	40.5	2,115	41.6	2,170	42.7	2,225	41,300	102%
Hodgdon H380	29.8	2,025	30.6	2,070	31.5	2,125	32.3	2,165	33.1	2,210	41,200	82%

160 gr Bullet · 25" barrel

COAL: 2.900" • Bullet length: 1.255" • Seat depth: 0.421" • Usable capacity: 42.9 / 48.7 gr H_2O

Powder	STEP 1 · 90%		STEP 2		STEP 3		STEP 4		STEP 5 · LIMIT			
	gr	fps	gr	fps	gr	fps	gr	fps	gr	fps	psi	Fill
Alliant Reloder 26	34.7	2,005	35.7	2,055	36.7	2,105	37.6	2,150	38.6	2,200	41,300	90%
Vihtavuori N565	35.6	1,980	36.6	2,030	37.6	2,075	38.6	2,125	39.6	2,175	41,200	97%
Vihtavuori N570	37.0	1,980	38.0	2,025	39.0	2,075	40.1	2,130	41.1	2,175	41,200	99%
Vihtavuori N560	34.2	1,990	35.2	2,040	36.1	2,080	37.0	2,125	38.0	2,170	41,300	93%
Alliant Reloder 23	32.7	1,980	33.6	2,025	34.5	2,070	35.4	2,115	36.3	2,160	41,100	92%
Hodgdon Retumbo	36.7	1,955	37.7	2,005	38.8	2,055	39.8	2,105	40.8	2,155	41,300	99%
Ramshot Grand	36.6	1,950	37.6	2,000	38.7	2,050	39.7	2,100	40.7	2,150	41,200	97%
Alliant Reloder 22	32.8	1,945	33.7	1,995	34.6	2,040	35.5	2,085	36.4	2,130	41,300	90%
Reload Swiss RS76	36.6	1,935	37.6	1,985	38.7	2,035	39.7	2,085	40.7	2,130	41,200	96%
Hodgdon H1000	35.0	1,930	36.0	1,980	37.0	2,030	37.9	2,075	38.9	2,125	41,100	98%
Ramshot Magnum	36.6	1,920	37.6	1,970	38.7	2,020	39.7	2,070	40.7	2,120	41,300	95%
Winchester StaBALL HD	37.3	1,920	38.3	1,965	39.3	2,010	40.4	2,065	41.4	2,110	41,300	98%
Alliant Reloder 19	32.0	1,920	32.9	1,970	33.8	2,015	34.6	2,060	35.5	2,105	41,200	88%
Alliant Reloder 25	34.5	1,910	35.5	1,960	36.4	2,005	37.3	2,050	38.3	2,100	41,200	97%
IMR 4831	31.3	1,910	32.2	1,960	33.0	2,005	33.9	2,050	34.8	2,100	41,200	87%
Hodgdon H4831	32.3	1,900	33.2	1,945	34.1	1,990	35.0	2,035	35.9	2,085	41,200	90%
Vihtavuori N170	35.2	1,910	36.2	1,955	37.2	2,000	38.1	2,040	39.1	2,085	41,300	95%
IMR 4350	29.7	1,895	30.5	1,940	31.4	1,990	32.2	2,030	33.0	2,070	41,100	83%
Vihtavuori N165	32.9	1,895	33.8	1,940	34.7	1,985	35.6	2,030	36.5	2,070	41,300	91%
IMR 7977	34.7	1,880	35.7	1,925	36.6	1,970	37.5	2,015	38.5	2,065	41,200	97%

6.5mm Remington Magnum

Remington introduced the 6.5mm Remington Magnum in 1966 in its Model 600 Magnum carbine. That carbine had an 18.5-inch barrel. The cartridge is the .350 Remington Magnum necked down to accept .264-inch bullets. The .350 had been introduced the previous year. Its case was in turn derived from a shortened .375 H&H Magnum. This gave the 6.5mm Remington Magnum a short belted case suited to short actions.

The short barrel of the original carbine could not take full advantage of the cartridge. This hurt its early reputation. Remington later chambered it in the Model 700 with a 24-inch barrel. Attempts to revive it included Remington's Model 673 Guide Rifle in 2004. Remington's factory load used a 120-grain bullet at about 3,210 fps. This light bullet suited smaller deer and predators. Remington no longer produces ammunition for the cartridge. It is now largely obsolete. Even so handloaders continue to use it for deer and pronghorn.

Cartridge specifications	
Bullet Diameter	**0.264" (6.71 mm)**
Max Case Length	**2.170" (55.12 mm)**
Case Trim Length	**2.160" (54.87 mm)**
Max COAL	**2.800" (71.12 mm)**
Primer Pocket	**Large Rifle**
Standard Twist	**1:9"**
Case Capacity	**68.2 gr H_2O**
Max Pressure	**4,350 bar / 63,091 psi (C.I.P.)**

100 gr Bullet · 25" barrel

COAL: 2.800" • Bullet length: 1.049" • Seat depth: 0.419" • Usable capacity: 62.7 / 68.2 gr H_2O

Powder	STEP 1 · 90%		STEP 2		STEP 3		STEP 4		STEP 5 · LIMIT			
	gr	fps	gr	fps	gr	fps	gr	fps	gr	fps	psi	Fill
Alliant Reloder 26	58.3	3,225	59.9	3,305	61.5	3,390	63.2	3,475	64.8	3,565	63,100	104%
Accurate 4350	53.6	3,225	55.1	3,300	56.6	3,380	58.1	3,455	59.6	3,535	63,000	99%
Hodgdon SUPERFORMANCE	55.2	3,210	56.7	3,285	58.3	3,370	59.8	3,445	61.3	3,525	62,800	96%
Winchester StaBALL 6.5	53.2	3,210	54.7	3,285	56.2	3,360	57.6	3,430	59.1	3,505	63,100	95%
Vihtavuori N555	53.9	3,190	55.4	3,265	56.9	3,345	58.4	3,425	59.9	3,500	62,900	103%
Alliant Reloder 23	54.5	3,180	56.0	3,255	57.5	3,330	59.1	3,415	60.6	3,490	60,100	105%
Reload Swiss RS62	54.0	3,165	55.5	3,245	57.0	3,320	58.5	3,400	60.0	3,480	62,800	99%
Reload Swiss RS70	55.6	3,145	57.1	3,225	58.7	3,305	60.3	3,390	61.8	3,470	62,900	99%
IMR 4350	52.1	3,160	53.5	3,235	55.0	3,310	56.5	3,390	57.9	3,460	63,000	99%
IMR 7828SSC	56.3	3,130	57.9	3,210	59.5	3,295	61.0	3,370	62.6	3,455	63,100	104%
Alliant Reloder 16	50.9	3,165	52.3	3,230	53.8	3,310	55.2	3,380	56.6	3,450	63,000	100%
IMR 4955	54.3	3,135	55.8	3,215	57.3	3,295	58.8	3,370	60.3	3,450	63,000	97%
Hodgdon H4831SC	55.3	3,130	56.8	3,205	58.3	3,285	59.9	3,365	61.4	3,445	63,000	99%
Accurate 2700	51.1	3,145	52.5	3,215	54.0	3,290	55.4	3,365	56.8	3,435	62,900	92%
Hodgdon H4831	55.2	3,095	56.7	3,170	58.3	3,250	59.8	3,330	61.3	3,410	59,900	105%
IMR 4320	46.4	3,105	47.7	3,175	49.0	3,245	50.3	3,310	51.6	3,380	62,900	83%
Hodgdon H4895	44.7	3,115	46.0	3,180	47.2	3,245	48.5	3,315	49.7	3,375	62,800	82%
Hodgdon H380	48.9	3,090	50.3	3,160	51.6	3,225	52.9	3,290	54.3	3,360	63,000	92%
Winchester StaBALL Match	46.6	3,090	47.9	3,155	49.2	3,225	50.5	3,290	51.8	3,355	62,800	93%
IMR 4064	45.3	3,090	46.5	3,150	47.8	3,215	49.0	3,280	50.3	3,345	62,900	86%

129 gr Bullet · 25" barrel

COAL: 2.800" • Bullet length: 1.321" • Seat depth: 0.691" • Usable capacity: 59.5 / 68.2 gr H_2O

Powder	STEP 1 · 90%		STEP 2		STEP 3		STEP 4		STEP 5 · LIMIT			
	gr	fps	gr	fps	gr	fps	gr	fps	gr	fps	psi	Fill
Alliant Reloder 26	53.6	2,915	55.1	2,985	56.5	3,055	58.0	3,130	59.5	3,205	63,000	100%
Alliant Reloder 23	50.8	2,880	52.2	2,950	53.6	3,015	55.0	3,085	56.4	3,150	63,000	103%
Hodgdon SUPERFORMANCE	50.6	2,870	52.0	2,940	53.4	3,005	54.8	3,075	56.2	3,145	62,900	92%
Accurate 4350	48.9	2,865	50.3	2,930	51.6	2,995	52.9	3,060	54.3	3,125	62,900	95%
Accurate MagPro	55.0	2,825	56.5	2,895	58.0	2,970	59.6	3,050	61.1	3,125	62,400	105%
Alliant Reloder 22	51.1	2,850	52.5	2,915	54.0	2,990	55.4	3,055	56.8	3,125	62,900	101%
Vihtavuori N560	52.4	2,855	53.9	2,925	55.3	2,990	56.8	3,060	58.2	3,125	62,900	102%
Alliant Reloder 19	50.3	2,835	51.7	2,905	53.1	2,975	54.5	3,045	55.9	3,115	62,900	100%
Hodgdon H4831	51.3	2,825	52.7	2,890	54.1	2,960	55.6	3,030	57.0	3,100	62,800	103%
Winchester Supreme 780	53.3	2,810	54.8	2,880	56.3	2,955	57.7	3,020	59.2	3,095	62,900	100%
IMR 7828SSC	51.2	2,815	52.6	2,880	54.0	2,950	55.5	3,020	56.9	3,090	63,000	99%
Hodgdon H4831SC	50.7	2,810	52.1	2,875	53.5	2,945	54.9	3,010	56.3	3,080	62,800	95%
IMR 7828	51.3	2,785	52.7	2,850	54.1	2,920	55.6	2,990	57.0	3,060	62,900	96%
IMR 4350	47.1	2,795	48.4	2,855	49.7	2,920	51.0	2,985	52.3	3,045	62,900	94%
Hodgdon H4350	46.2	2,785	47.5	2,850	48.8	2,910	50.0	2,970	51.3	3,035	63,100	87%
Vihtavuori N165	51.0	2,760	52.4	2,825	53.9	2,890	55.3	2,955	56.7	3,025	63,000	102%
Vihtavuori N170	54.0	2,750	55.5	2,815	57.0	2,880	58.5	2,950	60.0	3,015	62,400	105%
Alliant Reloder 16	45.7	2,765	47.0	2,825	48.3	2,890	49.5	2,945	50.8	3,010	62,800	95%
IMR 4451	46.7	2,755	48.0	2,815	49.3	2,880	50.6	2,945	51.9	3,005	62,900	91%
Vihtavuori N160	48.1	2,755	49.4	2,815	50.8	2,880	52.1	2,940	53.4	3,005	62,900	97%

140 gr Bullet · 25" barrel

COAL: 2.800" • Bullet length: 1.382" • Seat depth: 0.752" • Usable capacity: 58.6 / 68.2 gr H_2O

Powder	STEP 1 · 90%		STEP 2		STEP 3		STEP 4		STEP 5 · LIMIT			
	gr	fps	gr	fps	gr	fps	gr	fps	gr	fps	psi	Fill
Alliant Reloder 26	52.0	2,800	53.5	2,870	54.9	2,940	56.3	3,005	57.8	3,080	63,000	99%
Vihtavuori N565	52.7	2,765	54.2	2,835	55.7	2,900	57.1	2,965	58.6	3,040	63,000	105%
Accurate MagPro	53.8	2,740	55.3	2,810	56.8	2,880	58.3	2,955	59.8	3,025	62,900	104%
Ramshot Grand	54.4	2,740	55.9	2,810	57.4	2,880	58.9	2,950	60.4	3,025	61,900	105%
Alliant Reloder 23	49.2	2,755	50.6	2,825	52.0	2,890	53.3	2,950	54.7	3,020	63,000	101%
Ramshot Magnum	55.0	2,730	56.5	2,800	58.0	2,870	59.6	2,945	61.1	3,015	62,800	105%
Hodgdon SUPERFORMANCE	49.1	2,755	50.5	2,820	51.8	2,885	53.1	2,945	54.5	3,010	62,800	91%
Alliant Reloder 22	49.7	2,740	51.1	2,810	52.5	2,875	53.8	2,935	55.2	3,005	63,100	100%
Reload Swiss RS76	54.7	2,720	56.2	2,790	57.8	2,860	59.3	2,930	60.8	3,000	63,000	105%
Vihtavuori N560	50.5	2,730	51.9	2,790	53.3	2,855	54.7	2,915	56.1	2,980	63,100	100%
Hodgdon H4831	49.8	2,715	51.2	2,780	52.5	2,840	53.9	2,905	55.3	2,975	62,900	101%
IMR 4955	48.5	2,715	49.9	2,780	51.2	2,840	52.5	2,905	53.9	2,975	63,100	92%
IMR 7828SSC	49.6	2,705	51.0	2,770	52.4	2,835	53.7	2,895	55.1	2,960	63,100	98%
Hodgdon H4831SC	49.2	2,695	50.6	2,760	52.0	2,825	53.3	2,890	54.7	2,955	62,900	94%
Norma MRP	49.3	2,700	50.7	2,760	52.0	2,825	53.4	2,890	54.8	2,955	63,000	97%
IMR 7828	49.7	2,680	51.1	2,745	52.5	2,810	53.8	2,870	55.2	2,935	62,900	95%
Winchester StaBALL HD	54.4	2,660	55.9	2,730	57.4	2,795	58.9	2,865	60.4	2,935	59,600	105%
IMR 4350	45.5	2,670	46.8	2,730	48.0	2,785	49.3	2,850	50.5	2,905	62,800	92%
Hodgdon H4350	44.6	2,660	45.8	2,715	47.0	2,775	48.3	2,835	49.5	2,895	62,900	85%
Vihtavuori N165	49.3	2,640	50.7	2,700	52.0	2,760	53.4	2,825	54.8	2,890	63,100	100%

6.5mm-06

The 6.5mm-06 is formed by necking the .30-06 Springfield case down to hold .264-inch (6.5mm) bullets. A nearly identical commercial cartridge called the .256 Newton was marketed more than 80 years before the 6.5mm-06 was standardized. The Newton suffered from a lack of slow-burning powders. Surplus 6.5mm rifles and suitable powders became available after World War II. Wildcatters then revived the idea as the 6.5mm-06. In 1997 A-Square standardized the dimensions and submitted them to SAAMI as the 6.5-06 A-Square.

The cartridge is used with 6.5mm bullets of roughly 100 to 160 grains in standard-length bolt-action rifles. It is well suited to deer-sized game at long range. Brass is easily made from common .30-06 cases. This keeps the cartridge popular with handloaders and custom riflemakers. A-Square ceased operations in 2012. The 2015 SAAMI centerfire rifle standard no longer lists the cartridge. As a result factory ammunition is scarce.

Cartridge specifications	
Bullet Diameter	**0.264" (6.71 mm)**
Max Case Length	**2.480" (63.00 mm)**
Case Trim Length	**2.470" (62.74 mm)**
Max COAL	**3.310" (84.07 mm)**
Primer Pocket	**Large Rifle**
Standard Twist	**1:8"**
Case Capacity	**66.6 gr H_2O**
Max Pressure	**65,000 psi (SAAMI)**

100 gr Bullet · 25" barrel

COAL: 3.227" • Bullet length: 1.011" • Seat depth: 0.264" • Usable capacity: 63.2 / 66.6 gr H_2O

Powder	STEP 1 · 90%		STEP 2		STEP 3		STEP 4		STEP 5 · LIMIT			
	gr	fps	gr	fps	gr	fps	gr	fps	gr	fps	psi	Fill
Alliant Reloder 26	55.4	3,170	57.0	3,255	58.5	3,330	60.0	3,410	61.6	3,495	64,800	98%
Vihtavuori N560	55.4	3,185	56.9	3,260	58.5	3,340	60.0	3,415	61.5	3,490	64,800	102%
Alliant Reloder 23	52.6	3,180	54.0	3,250	55.5	3,330	57.0	3,405	58.4	3,480	64,700	100%
Ramshot Grand	58.6	3,135	60.2	3,215	61.8	3,300	63.5	3,390	65.1	3,475	62,800	105%
Hodgdon SUPERFORMANCE	52.3	3,155	53.8	3,230	55.2	3,305	56.6	3,380	58.1	3,460	64,900	90%
Hodgdon Hybrid 100V	49.5	3,155	50.9	3,230	52.3	3,305	53.6	3,380	55.0	3,455	64,900	98%
Winchester StaBALL 6.5	50.1	3,150	51.5	3,220	52.9	3,295	54.3	3,365	55.7	3,435	65,000	89%
Accurate 4350	50.0	3,135	51.4	3,205	52.8	3,280	54.1	3,350	55.5	3,425	64,900	92%
Alliant Reloder 19	52.3	3,100	53.8	3,180	55.2	3,255	56.6	3,330	58.1	3,410	64,900	98%
Hodgdon Retumbo	57.4	3,070	59.0	3,150	60.6	3,230	62.2	3,310	63.8	3,395	63,700	105%
Hodgdon H4350	48.5	3,100	49.9	3,175	51.2	3,245	52.5	3,315	53.9	3,390	64,800	86%
Alliant Reloder 16	48.0	3,110	49.3	3,180	50.6	3,245	52.0	3,315	53.3	3,385	64,800	94%
IMR 4350	49.0	3,095	50.4	3,170	51.7	3,240	53.0	3,305	54.4	3,380	64,900	92%
Vihtavuori N170	57.1	3,080	58.7	3,155	60.3	3,230	61.8	3,300	63.4	3,380	64,900	104%
Vihtavuori N165	53.7	3,065	55.2	3,140	56.7	3,215	58.2	3,290	59.7	3,370	65,000	101%
Vihtavuori N565	56.8	3,045	58.4	3,125	60.0	3,210	61.5	3,290	63.1	3,370	63,900	105%
Winchester StaBALL HD	58.6	3,020	60.2	3,100	61.8	3,180	63.5	3,265	65.1	3,350	64,900	105%
IMR 7828SSC	52.6	3,030	54.0	3,105	55.5	3,185	57.0	3,260	58.4	3,335	65,000	96%
Vihtavuori N160	49.8	3,045	51.2	3,115	52.5	3,180	53.9	3,255	55.3	3,325	64,900	95%
Hodgdon H4831	51.6	3,000	53.0	3,070	54.5	3,150	55.9	3,225	57.3	3,295	64,900	97%

120 gr Bullet · 25" barrel

COAL: 3.250" • Bullet length: 1.206" • Seat depth: 0.436" • Usable capacity: 60.9 / 66.6 gr H_2O

Powder	STEP 1 · 90%		STEP 2		STEP 3		STEP 4		STEP 5 · LIMIT			
	gr	fps	gr	fps	gr	fps	gr	fps	gr	fps	psi	Fill
Ramshot Grand	56.2	2,970	57.8	3,045	59.3	3,120	60.9	3,200	62.4	3,280	64,900	104%
Alliant Reloder 26	52.1	2,955	53.5	3,020	55.0	3,095	56.5	3,175	57.9	3,245	64,800	95%
Alliant Reloder 23	49.3	2,930	50.7	3,000	52.0	3,065	53.4	3,135	54.8	3,205	65,000	98%
Vihtavuori N570	55.2	2,895	56.7	2,965	58.3	3,045	59.8	3,120	61.3	3,200	64,800	104%
Hodgdon Hybrid 100V	46.7	2,920	48.0	2,985	49.3	3,055	50.6	3,125	51.9	3,195	65,000	96%
Hodgdon Retumbo	54.6	2,890	56.1	2,960	57.7	3,040	59.2	3,115	60.7	3,190	64,900	104%
Hodgdon SUPERFORMANCE	49.1	2,915	50.5	2,985	51.8	3,055	53.1	3,120	54.5	3,190	64,900	88%
Vihtavuori N560	51.0	2,910	52.4	2,975	53.9	3,045	55.3	3,115	56.7	3,180	64,800	97%
Vihtavuori N565	53.2	2,890	54.7	2,965	56.2	3,035	57.6	3,105	59.1	3,180	64,800	102%
Alliant Reloder 19	49.2	2,890	50.6	2,960	52.0	3,035	53.3	3,100	54.7	3,170	64,900	95%
Reload Swiss RS76	54.7	2,870	56.2	2,940	57.8	3,015	59.3	3,090	60.8	3,160	64,800	101%
Accurate 4350	46.7	2,880	48.0	2,945	49.3	3,010	50.6	3,075	51.9	3,140	65,000	89%
Ramshot Magnum	54.9	2,845	56.4	2,915	58.0	2,995	59.5	3,070	61.0	3,140	64,800	100%
Winchester StaBALL HD	55.4	2,835	56.9	2,905	58.5	2,980	60.0	3,055	61.5	3,130	64,700	103%
Ramshot Hunter	47.5	2,860	48.8	2,925	50.1	2,990	51.5	3,060	52.8	3,125	64,800	92%
Alliant Reloder 17	44.6	2,840	45.9	2,910	47.1	2,970	48.4	3,040	49.6	3,105	64,900	82%
IMR 7828	50.1	2,830	51.5	2,895	52.9	2,965	54.3	3,035	55.7	3,105	64,900	92%
Hodgdon H4350	45.0	2,845	46.3	2,910	47.5	2,970	48.8	3,040	50.0	3,100	64,800	83%
Vihtavuori N170	52.9	2,820	54.4	2,885	55.8	2,950	57.3	3,020	58.8	3,085	64,800	100%
IMR 4451	44.9	2,780	46.1	2,845	47.4	2,910	48.6	2,970	49.9	3,035	64,900	85%

130 gr Bullet · 25" barrel

COAL: 3.250" • Bullet length: 1.321" • Seat depth: 0.551" • Usable capacity: 59.4 / 66.6 gr H_2O

Powder	STEP 1 · 90%		STEP 2		STEP 3		STEP 4		STEP 5 · LIMIT			
	gr	fps	gr	fps	gr	fps	gr	fps	gr	fps	psi	Fill
Ramshot Grand	54.5	2,870	56.0	2,940	57.5	3,015	59.0	3,090	60.5	3,165	64,800	104%
Alliant Reloder 26	50.4	2,850	51.8	2,920	53.2	2,990	54.6	3,060	56.0	3,130	64,900	95%
Vihtavuori N570	53.4	2,815	54.9	2,890	56.3	2,955	57.8	3,030	59.3	3,105	64,900	103%
Alliant Reloder 23	47.6	2,815	48.9	2,880	50.3	2,950	51.6	3,010	52.9	3,075	64,900	97%
Hodgdon Retumbo	52.9	2,795	54.4	2,865	55.8	2,930	57.3	3,005	58.8	3,075	64,900	103%
Hodgdon Hybrid 100V	45.2	2,810	46.5	2,875	47.7	2,940	49.0	3,005	50.2	3,070	64,800	95%
Vihtavuori N565	51.2	2,795	52.6	2,865	54.0	2,930	55.5	3,000	56.9	3,070	64,900	101%
Alliant Reloder 19	47.6	2,790	48.9	2,855	50.3	2,925	51.6	2,990	52.9	3,060	64,800	95%
Alliant Reloder 22	47.9	2,780	49.2	2,845	50.5	2,910	51.9	2,980	53.2	3,045	64,800	95%
Reload Swiss RS76	53.0	2,770	54.5	2,840	56.0	2,910	57.4	2,975	58.9	3,045	64,900	100%
Vihtavuori N560	49.1	2,795	50.5	2,860	51.8	2,920	53.1	2,980	54.5	3,045	64,900	96%
Reload Swiss RS70	48.0	2,775	49.3	2,840	50.6	2,905	52.0	2,975	53.3	3,040	64,800	91%
Accurate 4350	45.0	2,760	46.3	2,825	47.5	2,885	48.8	2,950	50.0	3,010	64,800	88%
Hodgdon H1000	50.3	2,730	51.7	2,800	53.1	2,865	54.5	2,935	55.9	3,005	64,700	102%
IMR 7828	48.2	2,725	49.6	2,790	50.9	2,855	52.3	2,925	53.6	2,990	64,800	91%
Hodgdon H4350	43.3	2,725	44.5	2,785	45.7	2,845	46.9	2,910	48.1	2,970	64,900	82%
Accurate 3100	47.0	2,705	48.3	2,770	49.6	2,835	50.9	2,900	52.2	2,965	64,700	95%
Vihtavuori N165	48.1	2,710	49.4	2,770	50.8	2,840	52.1	2,900	53.4	2,960	64,900	97%
IMR 4350	43.7	2,715	44.9	2,775	46.1	2,835	47.3	2,895	48.5	2,955	64,800	88%
Vihtavuori N170	50.9	2,705	52.3	2,765	53.8	2,830	55.2	2,895	56.6	2,955	64,900	99%

140 gr Bullet · 25" barrel

COAL: 3.250" • Bullet length: 1.380" • Seat depth: 0.610" • Usable capacity: 58.5 / 66.6 gr H_2O

Powder	STEP 1 · 90%		STEP 2		STEP 3		STEP 4		STEP 5 · LIMIT			
	gr	fps	gr	fps	gr	fps	gr	fps	gr	fps	psi	Fill
Ramshot Grand	53.3	2,780	54.8	2,855	56.3	2,925	57.7	2,995	59.2	3,070	65,000	103%
Alliant Reloder 26	49.0	2,755	50.4	2,820	51.7	2,885	53.0	2,945	54.4	3,015	64,700	93%
Vihtavuori N570	51.8	2,735	53.3	2,805	54.7	2,870	56.1	2,940	57.6	3,010	64,800	101%
Hodgdon Retumbo	51.7	2,710	53.1	2,775	54.5	2,840	56.0	2,910	57.4	2,980	64,900	102%
Accurate MagPro	50.9	2,690	52.3	2,760	53.7	2,825	55.1	2,895	56.5	2,965	64,900	98%
Hodgdon Hybrid 100V	44.1	2,710	45.3	2,770	46.5	2,835	47.8	2,900	49.0	2,960	65,000	94%
Vihtavuori N565	49.4	2,700	50.8	2,765	52.1	2,825	53.5	2,895	54.9	2,960	64,900	99%
Alliant Reloder 19	46.4	2,700	47.7	2,765	49.0	2,830	50.2	2,890	51.5	2,955	64,700	93%
Ramshot Magnum	51.9	2,675	53.4	2,745	54.8	2,815	56.3	2,885	57.7	2,950	64,800	99%
Alliant Reloder 22	46.6	2,685	47.9	2,750	49.2	2,810	50.5	2,875	51.8	2,940	65,000	94%
Reload Swiss RS76	51.7	2,680	53.1	2,740	54.5	2,805	56.0	2,875	57.4	2,940	64,700	99%
Winchester StaBALL HD	52.4	2,660	53.9	2,730	55.3	2,795	56.8	2,860	58.2	2,930	64,800	101%
IMR 7977	50.1	2,655	51.5	2,725	52.9	2,790	54.3	2,855	55.7	2,925	64,900	103%
IMR 8133	51.8	2,650	53.2	2,715	54.6	2,780	56.1	2,855	57.5	2,920	64,800	102%
Winchester Supreme 780	48.7	2,655	50.1	2,725	51.4	2,785	52.8	2,855	54.1	2,915	64,800	93%
Hodgdon H1000	49.1	2,650	50.5	2,715	51.8	2,780	53.1	2,840	54.5	2,905	64,800	101%
IMR 7828	46.8	2,630	48.1	2,695	49.4	2,755	50.7	2,820	52.0	2,880	64,700	89%
Hodgdon H4350	41.9	2,615	43.1	2,675	44.3	2,735	45.4	2,790	46.6	2,850	64,900	80%
Vihtavuori N165	46.5	2,600	47.8	2,660	49.1	2,720	50.4	2,780	51.7	2,845	64,900	95%
Hodgdon H4831	45.2	2,585	46.5	2,650	47.7	2,705	49.0	2,770	50.2	2,825	64,800	92%

150 gr Bullet · 25" barrel

COAL: 3.310" • Bullet length: 1.451" • Seat depth: 0.621" • Usable capacity: 58.5 / 66.6 gr H_2O

Powder	STEP 1 · 90%		STEP 2		STEP 3		STEP 4		STEP 5 · LIMIT			
	gr	fps	gr	fps	gr	fps	gr	fps	gr	fps	psi	Fill
Ramshot Grand	52.6	2,710	54.0	2,775	55.5	2,845	57.0	2,920	58.4	2,985	65,000	102%
Vihtavuori N570	50.8	2,670	52.2	2,735	53.6	2,800	55.0	2,865	56.4	2,930	64,900	99%
Alliant Reloder 26	48.1	2,670	49.4	2,730	50.8	2,800	52.1	2,860	53.4	2,925	64,900	92%
Accurate MagPro	50.1	2,625	51.5	2,690	52.9	2,755	54.3	2,820	55.7	2,890	64,900	97%
Hodgdon Retumbo	50.8	2,635	52.2	2,695	53.6	2,760	55.0	2,825	56.4	2,890	64,800	100%
Ramshot Magnum	51.1	2,610	52.5	2,675	54.0	2,745	55.4	2,810	56.8	2,875	64,700	97%
Alliant Reloder 19	45.6	2,625	46.9	2,685	48.2	2,750	49.4	2,805	50.7	2,870	65,000	92%
Hodgdon Hybrid 100V	43.4	2,630	44.6	2,690	45.8	2,745	47.0	2,805	48.2	2,865	64,900	92%
Alliant Reloder 23	45.3	2,620	46.5	2,675	47.8	2,735	49.0	2,795	50.3	2,855	64,900	93%
IMR 8133	51.0	2,585	52.4	2,650	53.9	2,715	55.3	2,785	56.7	2,850	64,800	101%
Vihtavuori N565	47.9	2,610	49.2	2,670	50.5	2,730	51.9	2,790	53.2	2,850	64,800	96%
Winchester StaBALL HD	51.6	2,590	53.0	2,655	54.5	2,720	55.9	2,785	57.3	2,850	64,800	100%
Alliant Reloder 25	48.4	2,590	49.8	2,655	51.1	2,715	52.4	2,780	53.8	2,845	64,900	100%
Winchester Supreme 780	47.8	2,585	49.1	2,645	50.5	2,710	51.8	2,770	53.1	2,830	64,900	91%
Hodgdon H1000	48.2	2,575	49.6	2,640	50.9	2,700	52.3	2,765	53.6	2,825	64,900	99%
Hodgdon H4831SC	45.5	2,570	46.8	2,630	48.0	2,685	49.3	2,750	50.5	2,805	65,000	87%
Accurate 4350	42.7	2,560	43.9	2,615	45.0	2,670	46.2	2,725	47.4	2,785	64,700	85%
Accurate 3100	44.8	2,535	46.0	2,595	47.3	2,655	48.5	2,710	49.8	2,775	64,900	92%
IMR 4451	41.3	2,485	42.4	2,535	43.6	2,595	44.8	2,655	45.9	2,705	64,900	82%
Alliant Reloder 16	40.1	2,485	41.2	2,535	42.4	2,595	43.5	2,645	44.6	2,695	64,800	85%

6.5x47 Lapua

Nammo Lapua of Finland and Grünig & Elmiger of Switzerland designed the 6.5x47mm Lapua in 2005. It was intended for 300- to 1,000-meter competition shooting. The cartridge has no direct parent case. Its design does borrow features from the 6mm PPC. Prototypes used large rifle primers. For production brass the design was changed to small rifle primers. The cartridge is standardized by the Commission Internationale Permanente (C.I.P.).

Lapua's factory loads drive a 103-grain bullet at about 3,080 fps, a 123-grain bullet at about 2,900 fps and a 139-grain bullet at about 2,700 fps. The cartridge is used mainly for target and tactical shooting. By 2015 it had become widely used in Precision Rifle Series competition. Notable derivatives include the 6-6.5x47 Lapua and the 6.5x47 Lapua Ackley Improved. The first is necked down to 6mm. The second has a 40-degree shoulder.

Cartridge specifications	
Bullet Diameter	**0.264" (6.71 mm)**
Max Case Length	**1.850" (47.00 mm)**
Case Trim Length	**1.840" (46.75 mm)**
Max COAL	**2.795" (71.00 mm)**
Primer Pocket	**Small Rifle**
Standard Twist	**1:8"**
Case Capacity	**48.0 gr H_2O**
Max Pressure	**4,350 bar / 63,091 psi (C.I.P.)**

107 gr Bullet · 25" barrel

COAL: 2.660" • Bullet length: 1.275" • Seat depth: 0.466" • Usable capacity: 42.0 / 48.0 gr H_2O

Powder	STEP 1 · 90%		STEP 2		STEP 3		STEP 4		STEP 5 · LIMIT			
	gr	fps	gr	fps	gr	fps	gr	fps	gr	fps	psi	Fill
Alliant Reloder 15	37.2	2,930	38.2	2,995	39.3	3,065	40.3	3,130	41.3	3,195	62,700	105%
Hodgdon Leverevolution	37.2	2,925	38.2	2,990	39.3	3,060	40.3	3,125	41.3	3,195	63,000	94%
Ramshot Big Game	38.9	2,845	40.0	2,915	41.0	2,980	42.1	3,050	43.2	3,125	62,800	105%
Reload Swiss RS52	36.3	2,855	37.3	2,925	38.3	2,990	39.3	3,055	40.3	3,125	62,800	101%
Hodgdon BL-C(2)	36.7	2,850	37.7	2,915	38.8	2,990	39.8	3,055	40.8	3,120	63,100	97%
Vihtavuori N540	36.2	2,860	37.2	2,925	38.2	2,990	39.2	3,050	40.2	3,115	62,800	102%
Winchester 748	36.2	2,845	37.2	2,915	38.2	2,980	39.2	3,045	40.2	3,110	63,100	98%
Hodgdon H4350	39.3	2,810	40.4	2,885	41.5	2,955	42.6	3,025	43.7	3,100	61,000	105%
Accurate 2520	35.6	2,835	36.6	2,900	37.5	2,955	38.5	3,020	39.5	3,085	62,800	97%
Hodgdon Varget	35.1	2,820	36.1	2,885	37.0	2,945	38.0	3,015	39.0	3,080	63,100	97%
Hodgdon H414	38.8	2,780	39.9	2,855	41.0	2,925	42.0	2,990	43.1	3,060	63,100	104%
Alliant Reloder 17	38.1	2,775	39.1	2,840	40.2	2,915	41.3	2,985	42.3	3,055	62,900	101%
Hodgdon CFE 223	36.3	2,800	37.3	2,860	38.3	2,925	39.3	2,990	40.3	3,055	63,100	98%
Reload Swiss RS50	36.6	2,795	37.6	2,855	38.7	2,930	39.7	2,990	40.7	3,055	63,100	102%
IMR 4064	34.7	2,795	35.7	2,860	36.6	2,920	37.5	2,980	38.5	3,045	63,100	98%
Vihtavuori N150	35.4	2,790	36.4	2,855	37.3	2,915	38.3	2,980	39.3	3,045	61,700	105%
Hodgdon H380	37.4	2,775	38.4	2,835	39.5	2,905	40.5	2,970	41.5	3,035	59,600	105%
IMR 4166	34.0	2,770	35.0	2,835	35.9	2,895	36.8	2,955	37.8	3,025	62,700	100%
Winchester StaBALL Match	34.9	2,745	35.9	2,805	36.8	2,865	37.8	2,930	38.8	2,995	62,800	104%
Hodgdon Benchmark	32.2	2,740	33.1	2,800	34.0	2,860	34.9	2,920	35.8	2,980	62,700	94%

120 gr Bullet · 25" barrel

COAL: 2.610" • Bullet length: 1.252" • Seat depth: 0.493" • Usable capacity: 41.6 / 48.0 gr H_2O

Powder	STEP 1 · 90%		STEP 2		STEP 3		STEP 4		STEP 5 · LIMIT			
	gr	fps	gr	fps	gr	fps	gr	fps	gr	fps	psi	Fill
Hodgdon Leverevolution	35.8	2,750	36.8	2,815	37.8	2,875	38.8	2,940	39.8	3,005	63,000	91%
Alliant Reloder 15	35.6	2,750	36.6	2,810	37.6	2,875	38.6	2,935	39.6	3,000	63,000	102%
Hodgdon H4350	38.3	2,710	39.4	2,775	40.5	2,845	41.5	2,910	42.6	2,980	63,000	103%
Vihtavuori N550	37.4	2,725	38.4	2,785	39.5	2,850	40.5	2,910	41.5	2,970	61,800	105%
Ramshot Big Game	37.6	2,695	38.6	2,760	39.7	2,825	40.8	2,895	41.8	2,955	62,800	102%
Hodgdon BL-C(2)	35.6	2,700	36.6	2,765	37.5	2,820	38.5	2,885	39.5	2,950	63,000	95%
Reload Swiss RS52	35.1	2,700	36.1	2,765	37.0	2,820	38.0	2,885	39.0	2,950	62,900	99%
Winchester StaBALL 6.5	38.6	2,670	39.7	2,740	40.8	2,805	41.8	2,865	42.9	2,935	63,000	104%
Accurate 2700	37.5	2,655	38.5	2,715	39.6	2,785	40.7	2,855	41.7	2,920	62,800	102%
Alliant Reloder 17	37.0	2,655	38.0	2,715	39.0	2,780	40.1	2,855	41.1	2,920	62,900	99%
Vihtavuori N540	34.5	2,670	35.5	2,730	36.4	2,785	37.3	2,840	38.3	2,905	62,700	98%
Hodgdon Varget	33.8	2,660	34.7	2,715	35.6	2,775	36.6	2,840	37.5	2,895	63,000	94%
IMR 4895	33.2	2,635	34.1	2,695	35.0	2,750	36.0	2,815	36.9	2,870	62,800	92%
Vihtavuori N140	33.9	2,630	34.9	2,695	35.8	2,750	36.8	2,815	37.7	2,870	62,700	92%
Ramshot TAC	32.8	2,625	33.7	2,680	34.6	2,735	35.5	2,795	36.4	2,850	62,800	93%
Alliant Power Pro 4000-MR	38.5	2,580	39.6	2,645	40.6	2,710	41.7	2,775	42.8	2,845	59,600	105%
IMR 4166	32.9	2,615	33.8	2,670	34.7	2,730	35.6	2,785	36.5	2,845	62,800	97%
Shooters World Long Rifle	35.6	2,595	36.6	2,660	37.6	2,720	38.6	2,785	39.6	2,845	63,100	104%
IMR 4451	37.0	2,580	38.0	2,645	39.0	2,705	40.1	2,775	41.1	2,840	62,900	103%
IMR 4955	38.9	2,570	40.0	2,640	41.0	2,705	42.1	2,770	43.2	2,840	62,900	105%

130 gr Bullet · 25" barrel

COAL: 2.520" • Bullet length: 1.321" • Seat depth: 0.651" • Usable capacity: 39.5 / 48.0 gr H_2O

Powder	STEP 1 · 90%		STEP 2		STEP 3		STEP 4		STEP 5 · LIMIT			
	gr	fps	gr	fps	gr	fps	gr	fps	gr	fps	psi	Fill
Hodgdon Leverevolution	34.0	2,610	35.0	2,675	35.9	2,730	36.8	2,790	37.8	2,855	62,900	91%
Alliant Reloder 15	33.8	2,610	34.7	2,670	35.6	2,725	36.6	2,790	37.5	2,845	63,000	101%
Hodgdon H4350	36.4	2,590	37.4	2,650	38.4	2,715	39.4	2,775	40.4	2,840	62,900	103%
Vihtavuori N550	35.5	2,590	36.5	2,650	37.5	2,710	38.4	2,765	39.4	2,825	62,200	105%
Ramshot Big Game	35.8	2,570	36.8	2,630	37.8	2,695	38.8	2,755	39.8	2,820	63,000	103%
Reload Swiss RS52	33.4	2,570	34.3	2,625	35.3	2,690	36.2	2,750	37.1	2,805	63,000	99%
Hodgdon BL-C(2)	33.8	2,565	34.7	2,620	35.6	2,680	36.6	2,745	37.5	2,800	62,700	95%
Winchester StaBALL 6.5	36.7	2,545	37.7	2,605	38.8	2,670	39.8	2,730	40.8	2,795	62,800	104%
Alliant Reloder 17	35.2	2,535	36.2	2,600	37.2	2,660	38.1	2,720	39.1	2,785	62,900	99%
Winchester 748	33.1	2,550	34.0	2,605	35.0	2,670	35.9	2,725	36.8	2,785	62,700	96%
Accurate 2700	35.7	2,530	36.7	2,595	37.7	2,655	38.7	2,720	39.7	2,780	62,900	102%
Vihtavuori N540	32.7	2,530	33.6	2,585	34.5	2,640	35.4	2,695	36.3	2,750	62,900	98%
Hodgdon Varget	32.0	2,520	32.9	2,580	33.8	2,635	34.6	2,685	35.5	2,745	62,800	93%
IMR 4320	32.5	2,505	33.4	2,565	34.3	2,625	35.2	2,680	36.1	2,740	63,000	92%
Reload Swiss RS50	33.7	2,505	34.6	2,560	35.5	2,615	36.5	2,680	37.4	2,735	63,100	99%
Accurate 2520	32.2	2,500	33.1	2,555	34.0	2,610	34.9	2,665	35.8	2,725	62,900	93%
Accurate 4064	32.3	2,495	33.2	2,555	34.1	2,610	35.0	2,670	35.9	2,725	62,800	101%
Vihtavuori N140	32.1	2,495	33.0	2,550	33.9	2,605	34.8	2,665	35.7	2,720	62,700	92%
IMR 4451	35.2	2,465	36.2	2,525	37.2	2,590	38.1	2,645	39.1	2,710	63,000	103%
IMR 4166	31.2	2,475	32.1	2,535	33.0	2,590	33.8	2,645	34.7	2,700	63,000	97%

140 gr Bullet · 25" barrel

COAL: 2.580" • Bullet length: 1.375" • Seat depth: 0.645" • Usable capacity: 39.5 / 48.0 gr H_2O

Powder	STEP 1 · 90%		STEP 2		STEP 3		STEP 4		STEP 5 · LIMIT			
	gr	fps	gr	fps	gr	fps	gr	fps	gr	fps	psi	Fill
Hodgdon SUPERFORMANCE	38.1	2,500	39.1	2,560	40.2	2,625	41.3	2,690	42.3	2,755	62,200	105%
Hodgdon H4350	35.6	2,500	36.6	2,560	37.5	2,615	38.5	2,675	39.5	2,740	62,900	101%
Hodgdon Leverevolution	33.3	2,510	34.2	2,565	35.1	2,620	36.1	2,680	37.0	2,740	63,000	89%
Alliant Reloder 15	32.9	2,500	33.8	2,555	34.7	2,610	35.6	2,665	36.5	2,720	62,900	99%
Reload Swiss RS60	35.4	2,475	36.4	2,540	37.3	2,595	38.3	2,655	39.3	2,720	63,100	102%
Ramshot Big Game	35.1	2,475	36.1	2,535	37.0	2,590	38.0	2,650	39.0	2,710	62,900	101%
Vihtavuori N550	34.6	2,485	35.5	2,540	36.5	2,600	37.5	2,655	38.4	2,710	63,100	102%
Alliant Reloder 17	34.7	2,460	35.7	2,525	36.6	2,580	37.5	2,635	38.5	2,700	62,900	98%
Winchester StaBALL 6.5	36.1	2,460	37.1	2,520	38.1	2,580	39.1	2,640	40.1	2,700	63,000	102%
Accurate 2700	35.1	2,450	36.1	2,510	37.0	2,560	38.0	2,625	39.0	2,685	62,800	101%
Winchester 748	32.5	2,455	33.4	2,510	34.3	2,565	35.2	2,620	36.1	2,680	62,900	94%
Alliant Power Pro 4000-MR	36.6	2,425	37.6	2,485	38.7	2,550	39.7	2,610	40.7	2,670	62,100	105%
IMR 4007 SSC	34.6	2,420	35.5	2,475	36.5	2,535	37.5	2,595	38.4	2,655	63,000	104%
IMR 4350	34.7	2,415	35.7	2,475	36.7	2,535	37.6	2,590	38.6	2,650	60,200	105%
IMR 4955	36.5	2,400	37.5	2,465	38.5	2,525	39.5	2,585	40.5	2,645	62,900	103%
Hodgdon H4831SC	37.1	2,390	38.1	2,450	39.2	2,515	40.2	2,575	41.2	2,635	59,500	105%
Hodgdon Varget	31.2	2,415	32.1	2,470	33.0	2,525	33.8	2,575	34.7	2,630	62,900	91%
IMR 4451	34.6	2,390	35.5	2,445	36.5	2,505	37.5	2,565	38.4	2,620	62,700	101%
Vihtavuori N540	31.7	2,410	32.6	2,465	33.5	2,515	34.3	2,565	35.2	2,620	62,800	95%
Shooters World The Creed	31.8	2,395	32.7	2,450	33.5	2,500	34.4	2,555	35.3	2,610	62,800	93%

150 gr Bullet · 25" barrel

COAL: 2.725" • Bullet length: 1.434" • Seat depth: 0.559" • Usable capacity: 40.7 / 48.0 gr H_2O

Powder	STEP 1 · 90%		STEP 2		STEP 3		STEP 4		STEP 5 · LIMIT			
	gr	fps	gr	fps	gr	fps	gr	fps	gr	fps	psi	Fill
Hodgdon SUPERFORMANCE	38.3	2,460	39.4	2,520	40.5	2,585	41.5	2,645	42.6	2,710	62,700	102%
Hodgdon H4350	35.4	2,430	36.4	2,490	37.3	2,540	38.3	2,600	39.3	2,660	62,700	97%
Reload Swiss RS60	35.5	2,425	36.5	2,485	37.5	2,545	38.4	2,600	39.4	2,660	62,900	100%
Norma URP	35.0	2,420	36.0	2,480	37.0	2,540	37.9	2,595	38.9	2,655	59,800	105%
Reload Swiss RS70	38.2	2,410	39.3	2,475	40.3	2,530	41.4	2,595	42.4	2,655	62,600	105%
Reload Swiss RS62	37.0	2,405	38.0	2,465	39.0	2,525	40.1	2,590	41.1	2,650	61,500	105%
Alliant Reloder 17	34.8	2,410	35.8	2,470	36.8	2,530	37.7	2,580	38.7	2,645	63,000	95%
Hodgdon H4831SC	38.0	2,390	39.0	2,450	40.1	2,510	41.2	2,575	42.2	2,635	62,800	104%
Alliant Power Pro 4000-MR	37.0	2,390	38.0	2,450	39.0	2,510	40.1	2,570	41.1	2,630	63,000	103%
Ramshot Big Game	35.0	2,405	36.0	2,465	37.0	2,520	37.9	2,570	38.9	2,630	62,800	97%
Winchester StaBALL 6.5	36.1	2,400	37.1	2,455	38.1	2,510	39.1	2,565	40.1	2,625	63,000	99%
Hodgdon H414	35.2	2,390	36.2	2,450	37.2	2,505	38.1	2,560	39.1	2,620	63,000	98%
Accurate 2700	35.2	2,390	36.2	2,450	37.2	2,505	38.1	2,560	39.1	2,615	62,900	98%
Alliant Reloder 16	34.7	2,395	35.7	2,455	36.6	2,505	37.5	2,555	38.5	2,615	62,300	105%
IMR 4350	35.2	2,385	36.2	2,445	37.2	2,505	38.1	2,555	39.1	2,615	62,800	103%
Winchester 760	35.2	2,385	36.2	2,440	37.2	2,500	38.1	2,550	39.1	2,610	62,800	99%
IMR 7828	38.3	2,365	39.3	2,420	40.4	2,485	41.5	2,545	42.5	2,605	61,100	105%
Vihtavuori N550	33.9	2,380	34.9	2,440	35.8	2,490	36.8	2,545	37.7	2,595	62,800	97%
IMR 4451	34.7	2,340	35.7	2,400	36.7	2,455	37.6	2,510	38.6	2,565	63,000	99%
Hodgdon CFE 223	32.2	2,310	33.1	2,365	34.0	2,415	34.9	2,470	35.8	2,520	63,000	90%

6.5x50 Japanese

The Imperial Japanese Army adopted the 6.5x50mmSR Arisaka in 1897 with the Type 30 rifle and carbine. These arms were developed under Colonel Nariakira Arisaka. The new cartridge replaced the 8x52mm Murata. The semi-rimmed case originally fired a 160-grain round-nose bullet. The cartridge served in the Russo-Japanese War of 1904 to 1905. The Imperial Japanese Navy adopted it in 1902. In 1907 a spitzer load known as the Type 38 cartridge was adopted for the Type 38 rifle and later 6.5mm arms.

The Type 38 spitzer load fired a 139-grain bullet at about 2,500 fps. From the long Type 38 rifle it produced little muzzle flash and smoke. It was considered underpowered beside other military cartridges. Japan therefore began replacing it with the 7.7x58mm Arisaka in 1938. Both remained in service through World War II. Many Type 38 rifles came to the United States as war souvenirs. Commercial ammunition and brass from Norma later made them practical to shoot.

Cartridge specifications	
Bullet Diameter	**0.264" (6.71 mm)**
Max Case Length	**2.008" (51.00 mm)**
Case Trim Length	**1.998" (50.75 mm)**
Max COAL	**2.992" (76.00 mm)**
Primer Pocket	**Large Rifle**
Standard Twist	**1:8"**
Case Capacity	**44.8 gr H_2O**
Max Pressure	**2,950 bar / 42,786 psi (C.I.P.)**

100 gr Bullet · 25" barrel

COAL: 2.710" • Bullet length: 1.011" • Seat depth: 0.309" • Usable capacity: 40.8 / 44.8 gr H_2O

Powder	STEP 1 · 90%		STEP 2		STEP 3		STEP 4		STEP 5 · LIMIT			
	gr	fps	gr	fps	gr	fps	gr	fps	gr	fps	psi	Fill
Vihtavuori N550	35.5	2,575	36.5	2,635	37.5	2,695	38.4	2,745	39.4	2,805	42,700	102%
Hodgdon Leverevolution	33.0	2,555	33.9	2,615	34.9	2,680	35.8	2,740	36.7	2,795	42,700	86%
Accurate 2495	31.8	2,545	32.7	2,600	33.5	2,655	34.4	2,715	35.3	2,770	42,500	87%
Vihtavuori N540	32.2	2,525	33.1	2,580	34.0	2,635	34.9	2,690	35.8	2,745	42,600	93%
Winchester StaBALL 6.5	36.5	2,495	37.5	2,555	38.5	2,615	39.5	2,675	40.5	2,740	42,600	100%
Accurate 4350	36.8	2,470	37.8	2,535	38.8	2,595	39.9	2,665	40.9	2,730	41,100	105%
Hodgdon CFE 223	33.0	2,500	33.9	2,555	34.9	2,620	35.8	2,675	36.7	2,730	42,600	92%
Ramshot Big Game	34.7	2,485	35.7	2,545	36.6	2,600	37.5	2,655	38.5	2,720	42,700	96%
Alliant Power Pro 2000-MR	33.6	2,475	34.5	2,530	35.5	2,595	36.4	2,650	37.3	2,705	42,700	96%
Alliant Reloder 16	34.7	2,455	35.7	2,520	36.7	2,580	37.6	2,635	38.6	2,695	40,800	105%
Hodgdon H380	33.9	2,455	34.9	2,515	35.8	2,570	36.8	2,635	37.7	2,690	42,500	98%
Alliant TS 15.5	31.4	2,440	32.3	2,500	33.1	2,550	34.0	2,610	34.9	2,670	42,700	92%
Accurate 2700	34.5	2,430	35.5	2,490	36.4	2,545	37.3	2,600	38.3	2,665	42,700	96%
IMR 4350	35.6	2,425	36.6	2,485	37.5	2,540	38.5	2,605	39.5	2,665	42,600	104%
Hodgdon H4895	29.6	2,445	30.4	2,495	31.3	2,555	32.1	2,610	32.9	2,660	42,500	84%
IMR 4064	30.6	2,440	31.5	2,500	32.3	2,550	33.1	2,600	34.0	2,655	42,600	89%
Ramshot Hunter	36.2	2,405	37.2	2,465	38.2	2,525	39.2	2,585	40.2	2,650	42,500	105%
IMR 4320	31.1	2,420	32.0	2,480	32.8	2,530	33.6	2,585	34.5	2,640	42,600	85%
Norma 203B	30.6	2,415	31.5	2,475	32.3	2,525	33.1	2,580	34.0	2,635	42,700	90%
IMR 3031	28.4	2,405	29.2	2,460	30.0	2,510	30.8	2,565	31.6	2,615	42,500	83%

120 gr Bullet · 25" barrel

COAL: 2.800" • Bullet length: 1.131" • Seat depth: 0.339" • Usable capacity: 40.4 / 44.8 gr H_2O

Powder	STEP 1 · 90%		STEP 2		STEP 3		STEP 4		STEP 5 · LIMIT			
	gr	fps	gr	fps	gr	fps	gr	fps	gr	fps	psi	Fill
Accurate 4350	35.7	2,355	36.7	2,415	37.7	2,470	38.7	2,530	39.7	2,590	42,800	103%
Hodgdon Leverevolution	31.1	2,320	32.0	2,375	32.9	2,435	33.7	2,480	34.6	2,540	42,500	82%
Winchester StaBALL 6.5	34.7	2,310	35.7	2,365	36.7	2,425	37.6	2,475	38.6	2,535	42,600	96%
Accurate 2495	30.1	2,315	30.9	2,365	31.8	2,420	32.6	2,470	33.4	2,520	42,500	83%
Vihtavuori N550	32.7	2,320	33.6	2,370	34.5	2,420	35.4	2,470	36.3	2,520	42,700	94%
Alliant Reloder 26	37.8	2,275	38.8	2,330	39.9	2,395	41.0	2,455	42.0	2,515	42,700	104%
Vihtavuori N555	35.6	2,285	36.6	2,340	37.5	2,395	38.5	2,450	39.5	2,510	42,300	105%
Alliant Power Pro 2000-MR	31.9	2,275	32.8	2,330	33.6	2,375	34.5	2,430	35.4	2,485	42,700	92%
Hodgdon H4350	33.2	2,265	34.1	2,320	35.0	2,370	36.0	2,430	36.9	2,485	42,700	92%
IMR 4350	33.7	2,265	34.6	2,320	35.5	2,370	36.5	2,430	37.4	2,485	42,500	99%
Hodgdon H380	32.1	2,260	33.0	2,310	33.9	2,365	34.8	2,415	35.7	2,470	42,700	94%
Norma 204	34.3	2,230	35.3	2,290	36.2	2,345	37.1	2,395	38.1	2,455	42,600	99%
IMR 7828SSC	36.4	2,205	37.4	2,265	38.4	2,320	39.4	2,380	40.4	2,435	42,500	104%
Reload Swiss RS70	35.7	2,200	36.7	2,260	37.7	2,315	38.7	2,375	39.7	2,435	42,600	99%
Hodgdon H4831SC	35.6	2,200	36.6	2,260	37.5	2,310	38.5	2,365	39.5	2,425	42,700	98%
IMR 4320	29.5	2,210	30.3	2,265	31.1	2,315	32.0	2,370	32.8	2,420	42,600	82%
IMR 4895	28.7	2,225	29.5	2,275	30.3	2,325	31.1	2,375	31.9	2,420	42,700	82%
Alliant Reloder 19	34.9	2,180	35.9	2,240	36.8	2,295	37.8	2,350	38.8	2,410	42,700	102%
Hodgdon H4831	35.6	2,175	36.6	2,235	37.5	2,285	38.5	2,345	39.5	2,400	42,700	105%
IMR 4064	28.5	2,205	29.3	2,255	30.1	2,305	30.9	2,350	31.7	2,400	42,600	84%

129 gr Bullet · 25" barrel

COAL: 2.800" • Bullet length: 1.317" • Seat depth: 0.524" • Usable capacity: 37.8 / 44.8 gr H_2O

Powder	STEP 1 · 90%		STEP 2		STEP 3		STEP 4		STEP 5 · LIMIT			
	gr	fps	gr	fps	gr	fps	gr	fps	gr	fps	psi	Fill
Accurate 4350	33.7	2,245	34.6	2,300	35.5	2,350	36.5	2,410	37.4	2,465	42,500	103%
Hodgdon Leverevolution	29.4	2,210	30.2	2,260	31.1	2,315	31.9	2,365	32.7	2,415	42,600	83%
Winchester StaBALL 6.5	32.9	2,205	33.8	2,255	34.7	2,310	35.6	2,360	36.5	2,415	42,600	97%
Accurate 2495	28.4	2,200	29.2	2,250	29.9	2,295	30.7	2,345	31.5	2,395	42,700	84%
Vihtavuori N550	30.8	2,200	31.7	2,250	32.5	2,300	33.4	2,350	34.2	2,395	42,500	95%
Alliant Reloder 26	35.6	2,170	36.6	2,225	37.5	2,275	38.5	2,335	39.5	2,390	42,200	105%
Alliant Reloder 16	31.1	2,175	32.0	2,230	32.9	2,280	33.7	2,330	34.6	2,380	42,500	102%
IMR 4350	31.8	2,160	32.7	2,215	33.5	2,260	34.4	2,315	35.3	2,370	42,600	100%
Alliant Power Pro 2000-MR	30.1	2,160	30.9	2,210	31.8	2,265	32.6	2,315	33.4	2,360	42,600	93%
Hodgdon H380	30.3	2,150	31.2	2,200	32.0	2,250	32.9	2,300	33.7	2,350	42,800	95%
Accurate 2700	31.1	2,145	32.0	2,195	32.8	2,245	33.6	2,290	34.5	2,345	42,800	93%
Alliant Power Pro 4000-MR	32.6	2,115	33.5	2,165	34.4	2,220	35.3	2,270	36.2	2,325	42,600	98%
Reload Swiss RS70	33.8	2,110	34.7	2,160	35.6	2,215	36.6	2,270	37.5	2,325	42,700	100%
Vihtavuori N150	28.1	2,130	28.9	2,175	29.6	2,220	30.4	2,270	31.2	2,315	42,700	93%
Winchester StaBALL Match	28.4	2,120	29.2	2,170	30.0	2,220	30.8	2,265	31.6	2,315	42,700	94%
Alliant Reloder 19	32.9	2,080	33.8	2,135	34.8	2,195	35.7	2,245	36.6	2,300	42,600	103%
IMR 4320	27.9	2,105	28.7	2,155	29.4	2,200	30.2	2,250	31.0	2,300	42,700	83%
IMR 7828	34.5	2,080	35.5	2,135	36.4	2,185	37.3	2,240	38.3	2,300	42,600	102%
Hodgdon H4831	33.2	2,060	34.1	2,110	35.0	2,160	36.0	2,220	36.9	2,275	41,700	105%
IMR 4064	26.8	2,090	27.6	2,140	28.3	2,185	29.1	2,230	29.8	2,275	42,700	84%

140 gr Bullet · 25" barrel

COAL: 2.800" • Bullet length: 1.336" • Seat depth: 0.544" • Usable capacity: 37.6 / 44.8 gr H_2O

Powder	STEP 1 · 90%		STEP 2		STEP 3		STEP 4		STEP 5 · LIMIT			
	gr	fps	gr	fps	gr	fps	gr	fps	gr	fps	psi	Fill
Accurate 4350	32.9	2,170	33.8	2,220	34.8	2,280	35.7	2,330	36.6	2,385	42,700	102%
Vihtavuori N555	32.9	2,135	33.8	2,185	34.7	2,235	35.6	2,290	36.5	2,340	42,800	104%
Alliant Reloder 26	34.9	2,115	35.9	2,170	36.8	2,220	37.8	2,275	38.8	2,335	42,600	104%
Winchester StaBALL 6.5	32.0	2,115	32.9	2,165	33.8	2,220	34.7	2,270	35.6	2,320	42,600	96%
Hodgdon Leverevolution	28.6	2,110	29.4	2,160	30.2	2,210	31.0	2,260	31.8	2,305	42,700	81%
Hodgdon SUPERFORMANCE	33.1	2,095	34.0	2,145	35.0	2,205	35.9	2,255	36.8	2,305	42,600	96%
Alliant Reloder 23	32.7	2,090	33.6	2,145	34.5	2,195	35.4	2,245	36.3	2,295	40,900	105%
Accurate 2495	27.5	2,090	28.3	2,140	29.1	2,190	29.8	2,235	30.6	2,285	42,600	82%
IMR 4350	30.9	2,080	31.8	2,135	32.6	2,180	33.4	2,225	34.3	2,280	42,500	98%
Ramshot Big Game	30.2	2,085	31.1	2,135	31.9	2,180	32.8	2,235	33.6	2,280	42,700	91%
Vihtavuori N550	29.6	2,090	30.4	2,135	31.3	2,185	32.1	2,230	32.9	2,275	42,700	92%
IMR 7828SSC	33.5	2,055	34.4	2,105	35.4	2,160	36.3	2,210	37.2	2,265	42,600	103%
Reload Swiss RS62	32.0	2,050	32.9	2,100	33.8	2,155	34.7	2,205	35.6	2,260	42,700	99%
Norma MRP	32.9	2,045	33.8	2,095	34.8	2,150	35.7	2,200	36.6	2,250	42,600	101%
Hodgdon H380	29.4	2,055	30.2	2,100	31.1	2,155	31.9	2,200	32.7	2,245	42,600	92%
Hodgdon H4831SC	32.8	2,035	33.7	2,085	34.6	2,135	35.5	2,185	36.4	2,240	42,500	97%
IMR 4955	32.0	2,030	32.9	2,080	33.8	2,135	34.7	2,185	35.6	2,240	42,700	95%
Hodgdon H4831	32.8	2,020	33.7	2,075	34.6	2,125	35.5	2,175	36.4	2,225	42,700	104%
IMR 4320	27.2	2,015	27.9	2,060	28.7	2,110	29.4	2,155	30.2	2,200	42,600	81%
IMR 4064	25.9	1,990	26.6	2,030	27.4	2,080	28.1	2,125	28.8	2,165	42,600	82%

160 gr Bullet · 25" barrel

COAL: 2.795" • Bullet length: 1.257" • Seat depth: 0.470" • Usable capacity: 38.3 / 44.8 gr H_2O

Powder	STEP 1 · 90%		STEP 2		STEP 3		STEP 4		STEP 5 · LIMIT			
	gr	fps	gr	fps	gr	fps	gr	fps	gr	fps	psi	Fill
Accurate 4350	32.0	2,040	32.9	2,085	33.8	2,135	34.7	2,185	35.6	2,235	42,700	97%
Vihtavuori N560	34.6	2,040	35.5	2,085	36.5	2,140	37.5	2,190	38.4	2,235	42,700	105%
Alliant Reloder 26	34.2	2,015	35.2	2,070	36.1	2,120	37.0	2,165	38.0	2,220	42,800	100%
Alliant Reloder 23	32.4	2,000	33.3	2,050	34.2	2,100	35.1	2,145	36.0	2,195	42,700	102%
Vihtavuori N555	31.4	2,005	32.3	2,050	33.1	2,095	34.0	2,145	34.9	2,190	42,800	98%
Hodgdon SUPERFORMANCE	32.3	1,985	33.2	2,035	34.1	2,085	35.0	2,130	35.9	2,180	42,700	92%
Winchester StaBALL 6.5	31.1	1,975	32.0	2,025	32.8	2,065	33.6	2,110	34.5	2,160	42,600	91%
IMR 7828SSC	32.5	1,945	33.4	1,995	34.3	2,045	35.2	2,090	36.1	2,140	42,700	98%
Alliant Reloder 19	31.5	1,930	32.4	1,980	33.3	2,030	34.1	2,075	35.0	2,125	42,600	97%
Norma MRP	32.1	1,935	33.0	1,980	33.9	2,030	34.8	2,080	35.7	2,125	42,700	97%
Ramshot Magnum	35.8	1,915	36.8	1,965	37.8	2,015	38.8	2,070	39.8	2,120	42,600	104%
Alliant Power Pro 4000-MR	31.1	1,925	32.0	1,975	32.9	2,025	33.7	2,065	34.6	2,115	42,700	92%
IMR 4350	29.7	1,935	30.5	1,980	31.4	2,030	32.2	2,075	33.0	2,115	42,500	93%
Hodgdon H4350	29.1	1,930	29.9	1,975	30.7	2,020	31.5	2,065	32.3	2,110	42,600	85%
Hodgdon H4831	32.0	1,920	32.9	1,970	33.8	2,020	34.6	2,060	35.5	2,110	42,800	100%
Vihtavuori N165	32.8	1,925	33.7	1,975	34.6	2,020	35.5	2,065	36.4	2,110	42,800	102%
Vihtavuori N170	34.7	1,920	35.7	1,965	36.7	2,015	37.6	2,060	38.6	2,110	41,600	105%
Accurate 2700	29.4	1,915	30.2	1,960	31.1	2,010	31.9	2,055	32.7	2,100	42,700	87%
Hodgdon BL-C(2)	27.6	1,915	28.4	1,965	29.1	2,005	29.9	2,050	30.7	2,100	42,800	81%
Hodgdon H380	28.3	1,895	29.1	1,940	29.9	1,985	30.6	2,025	31.4	2,070	42,800	87%

6.5x55 Swedish

Development of the 6.5x55 Swedish began in 1891 under a joint Norwegian and Swedish commission. The cartridge was standardized in 1893. This allowed the two countries to share military ammunition. They were then in union. Norway adopted it with the Krag-Jørgensen M1894 rifle. Sweden adopted it with Mauser-pattern arms. These included the m/96 rifle, the m/38 short rifle and the m/41 sniper rifle. Sweden also chambered the Ag m/42 semiautomatic rifle for it. It is an original rimless design. C.I.P. standardized it as the 6.5x55 SE in 1984. SAAMI followed in 1993.

The original service load used a 156-grain round-nose bullet. A 140-grain spitzer boat-tail was introduced in 1941. The cartridge is highly regarded as a hunting round in Europe. In Scandinavia in particular it is used for game up to moose. It is also popular in target shooting including long-range competition. Factory ammunition and components remain widely available. Many surplus military rifles in this chambering are still in use.

Cartridge specifications	
Bullet Diameter	**0.264" (6.71 mm)**
Max Case Length	**2.165" (54.99 mm)**
Case Trim Length	**2.155" (54.74 mm)**
Max COAL	**2.955" (75.06 mm)**
Primer Pocket	**Large Rifle**
Standard Twist	**1:8"**
Case Capacity	**57.1 gr H_2O**
Max Pressure	**51,000 psi (SAAMI)**

100 gr Bullet · 25" barrel

COAL: 2.850" • Bullet length: 0.972" • Seat depth: 0.287" • Usable capacity: 53.3 / 57.1 gr H_2O

Powder	STEP 1 · 90%		STEP 2		STEP 3		STEP 4		STEP 5 · LIMIT			
	gr	fps	gr	fps	gr	fps	gr	fps	gr	fps	psi	Fill
Hodgdon H4350	44.3	2,925	45.5	2,990	46.8	3,065	48.0	3,135	49.2	3,205	50,800	93%
Vihtavuori N550	42.7	2,945	43.9	3,010	45.0	3,070	46.2	3,135	47.4	3,200	51,000	93%
Vihtavuori N555	46.3	2,905	47.6	2,975	48.8	3,045	50.1	3,115	51.4	3,190	51,000	103%
Alliant Reloder 23	46.0	2,880	47.3	2,950	48.5	3,020	49.8	3,090	51.1	3,165	50,900	104%
Vihtavuori N540	39.9	2,920	41.0	2,980	42.1	3,040	43.2	3,100	44.3	3,160	50,900	88%
Alliant Reloder 26	48.3	2,850	49.6	2,920	51.0	3,000	52.4	3,075	53.7	3,150	50,800	101%
Reload Swiss RS60	43.3	2,870	44.5	2,940	45.7	3,010	46.9	3,080	48.1	3,150	50,900	93%
Alliant Reloder 16	42.3	2,855	43.5	2,920	44.6	2,980	45.8	3,045	47.0	3,115	51,000	98%
Vihtavuori N160	44.9	2,840	46.1	2,905	47.4	2,975	48.6	3,040	49.9	3,115	50,900	102%
Hodgdon H380	41.5	2,845	42.6	2,905	43.8	2,970	45.0	3,040	46.1	3,100	51,000	92%
Winchester 760	42.7	2,830	43.9	2,895	45.0	2,955	46.2	3,025	47.4	3,090	50,900	91%
Winchester StaBALL Match	39.0	2,830	40.1	2,890	41.1	2,950	42.2	3,010	43.3	3,075	50,900	91%
IMR 4895	37.6	2,830	38.6	2,885	39.7	2,950	40.8	3,015	41.8	3,070	50,900	81%
IMR 4064	37.7	2,820	38.8	2,880	39.8	2,940	40.9	3,000	41.9	3,060	50,900	84%
IMR 7828SSC	46.8	2,770	48.1	2,840	49.4	2,910	50.7	2,985	52.0	3,060	50,900	101%
Norma MRP	45.8	2,775	47.1	2,845	48.3	2,910	49.6	2,980	50.9	3,055	50,800	99%
Vihtavuori N150	38.4	2,815	39.5	2,875	40.5	2,930	41.6	2,995	42.7	3,055	50,900	90%
Alliant Reloder 19	45.2	2,765	46.5	2,840	47.7	2,905	49.0	2,980	50.2	3,050	50,900	100%
Hodgdon Varget	37.5	2,800	38.5	2,860	39.6	2,925	40.7	2,985	41.7	3,045	51,000	81%
Reload Swiss RS76	50.0	2,735	51.4	2,810	52.8	2,880	54.1	2,950	55.5	3,025	49,500	105%

120 gr Bullet · 25" barrel

COAL: 2.955" • Bullet length: 1.252" • Seat depth: 0.462" • Usable capacity: 51.1 / 57.1 gr H_2O

Powder	STEP 1 · 90%		STEP 2		STEP 3		STEP 4		STEP 5 · LIMIT			
	gr	fps	gr	fps	gr	fps	gr	fps	gr	fps	psi	Fill
Vihtavuori N555	42.8	2,695	44.0	2,760	45.1	2,820	46.3	2,885	47.5	2,950	50,800	100%
Alliant Reloder 26	45.4	2,665	46.6	2,730	47.9	2,800	49.1	2,860	50.4	2,935	50,900	99%
Hodgdon H4350	41.0	2,685	42.1	2,745	43.3	2,810	44.5	2,875	45.6	2,935	50,900	90%
Vihtavuori N560	45.5	2,680	46.8	2,745	48.0	2,805	49.3	2,875	50.5	2,935	50,900	103%
Reload Swiss RS60	40.6	2,660	41.7	2,720	42.9	2,790	44.0	2,850	45.1	2,910	51,000	91%
Hodgdon H4831	44.3	2,635	45.5	2,700	46.8	2,765	48.0	2,830	49.2	2,900	51,000	103%
Hodgdon SUPERFORMANCE	42.8	2,640	44.0	2,705	45.2	2,765	46.4	2,830	47.6	2,895	50,900	91%
IMR 4350	40.7	2,635	41.8	2,695	43.0	2,760	44.1	2,820	45.2	2,880	51,000	95%
Vihtavuori N165	44.9	2,625	46.1	2,685	47.4	2,750	48.6	2,815	49.9	2,880	49,500	105%
Alliant Reloder 22	43.4	2,615	44.6	2,680	45.8	2,745	47.0	2,810	48.2	2,875	50,900	100%
Vihtavuori N550	38.9	2,640	40.0	2,700	41.0	2,750	42.1	2,810	43.2	2,865	50,800	89%
Vihtavuori N160	41.7	2,605	42.9	2,670	44.0	2,725	45.1	2,785	46.3	2,850	50,800	98%
Alliant Reloder 19	42.4	2,585	43.6	2,650	44.8	2,715	45.9	2,775	47.1	2,840	50,900	98%
Norma MRP	42.9	2,580	44.1	2,640	45.3	2,705	46.5	2,770	47.7	2,835	51,000	97%
Vihtavuori N540	36.5	2,610	37.5	2,665	38.5	2,715	39.5	2,770	40.5	2,825	50,900	84%
Alliant Reloder 16	38.9	2,595	40.0	2,650	41.0	2,705	42.1	2,760	43.2	2,820	50,800	94%
Hodgdon H4831SC	42.7	2,570	43.9	2,635	45.0	2,690	46.2	2,755	47.4	2,820	50,800	93%
Vihtavuori N170	46.4	2,570	47.7	2,630	49.0	2,690	50.2	2,750	51.5	2,815	49,700	105%
IMR 4064	34.7	2,540	35.7	2,595	36.6	2,645	37.5	2,695	38.5	2,750	50,800	81%
Vihtavuori N150	35.3	2,535	36.3	2,590	37.3	2,645	38.2	2,695	39.2	2,750	51,000	86%

130 gr Bullet · 25" barrel

COAL: 2.935" • Bullet length: 1.320" • Seat depth: 0.550" • Usable capacity: 49.9 / 57.1 gr H_2O

Powder	STEP 1 · 90%		STEP 2		STEP 3		STEP 4		STEP 5 · LIMIT			
	gr	fps	gr	fps	gr	fps	gr	fps	gr	fps	psi	Fill
Vihtavuori N555	41.1	2,590	42.3	2,655	43.4	2,715	44.6	2,775	45.7	2,835	50,800	98%
Hodgdon H4350	39.5	2,580	40.6	2,635	41.7	2,695	42.8	2,755	43.9	2,815	50,800	89%
Vihtavuori N560	43.7	2,570	44.9	2,630	46.2	2,695	47.4	2,755	48.6	2,815	51,000	102%
Alliant Reloder 23	41.7	2,565	42.9	2,630	44.0	2,685	45.1	2,745	46.3	2,810	50,900	101%
Reload Swiss RS60	39.2	2,555	40.3	2,615	41.4	2,680	42.5	2,740	43.6	2,800	50,800	90%
Vihtavuori N165	43.8	2,550	45.0	2,610	46.3	2,675	47.5	2,735	48.7	2,800	50,900	105%
Hodgdon H4831	42.8	2,540	44.0	2,605	45.2	2,670	46.4	2,730	47.6	2,795	51,000	102%
IMR 4350	39.2	2,530	40.3	2,590	41.4	2,645	42.4	2,700	43.5	2,760	50,800	94%
Reload Swiss RS76	46.1	2,495	47.4	2,560	48.7	2,625	49.9	2,685	51.2	2,750	50,900	103%
Alliant Reloder 19	41.0	2,495	42.1	2,555	43.3	2,620	44.5	2,685	45.6	2,745	50,800	97%
IMR 7828SSC	42.1	2,500	43.3	2,560	44.5	2,625	45.6	2,680	46.8	2,745	50,900	97%
Vihtavuori N160	40.2	2,500	41.3	2,560	42.5	2,620	43.6	2,675	44.7	2,735	51,000	97%
Norma MRP	41.5	2,490	42.6	2,545	43.8	2,605	45.0	2,670	46.1	2,730	50,800	96%
Hodgdon H4831SC	41.3	2,480	42.4	2,535	43.6	2,600	44.8	2,660	45.9	2,720	50,800	93%
Vihtavuori N170	45.1	2,485	46.4	2,545	47.6	2,600	48.9	2,665	50.1	2,720	50,900	104%
Winchester Supreme 780	43.6	2,460	44.8	2,525	46.0	2,585	47.2	2,650	48.4	2,710	50,800	98%
Hodgdon H1000	43.5	2,445	44.7	2,505	45.9	2,565	47.1	2,630	48.3	2,690	48,500	105%
Winchester StaBALL HD	46.3	2,430	47.6	2,495	48.8	2,555	50.1	2,620	51.4	2,685	49,700	105%
Ramshot Hunter	38.3	2,410	39.4	2,470	40.5	2,525	41.5	2,580	42.6	2,635	50,700	91%
Ramshot Magnum	44.6	2,385	45.8	2,445	47.0	2,505	48.3	2,570	49.5	2,630	50,900	99%

140 gr Bullet · 25" barrel

COAL: 2.955" • Bullet length: 1.356" • Seat depth: 0.566" • Usable capacity: 49.7 / 57.1 gr H_2O

Powder	STEP 1 · 90%		STEP 2		STEP 3		STEP 4		STEP 5 · LIMIT			
	gr	fps	gr	fps	gr	fps	gr	fps	gr	fps	psi	Fill
Alliant Reloder 26	43.0	2,500	44.2	2,560	45.4	2,620	46.6	2,680	47.8	2,745	50,900	97%
Vihtavuori N555	39.8	2,495	40.9	2,555	42.0	2,610	43.1	2,665	44.2	2,725	50,900	95%
Vihtavuori N565	44.5	2,475	45.7	2,530	47.0	2,595	48.2	2,655	49.4	2,715	51,000	104%
Alliant Reloder 23	40.7	2,475	41.8	2,530	43.0	2,595	44.1	2,650	45.2	2,705	50,800	99%
Hodgdon H4350	38.4	2,475	39.5	2,535	40.5	2,590	41.6	2,645	42.7	2,705	50,800	87%
Reload Swiss RS60	38.4	2,470	39.5	2,530	40.5	2,585	41.6	2,645	42.7	2,705	50,900	88%
Hodgdon H4831	41.9	2,465	43.0	2,520	44.2	2,580	45.4	2,645	46.5	2,700	50,700	100%
Vihtavuori N570	45.6	2,445	46.9	2,510	48.2	2,575	49.4	2,635	50.7	2,700	50,300	105%
Vihtavuori N165	42.8	2,465	44.0	2,520	45.1	2,575	46.3	2,635	47.5	2,695	51,000	103%
Vihtavuori N560	42.3	2,470	43.5	2,525	44.6	2,580	45.8	2,640	47.0	2,695	50,900	99%
Alliant Reloder 22	41.1	2,450	42.3	2,510	43.4	2,570	44.6	2,630	45.7	2,685	51,000	98%
Hodgdon Retumbo	45.1	2,430	46.4	2,495	47.6	2,555	48.9	2,620	50.1	2,680	50,400	105%
Winchester StaBALL HD	45.8	2,385	47.1	2,450	48.3	2,505	49.6	2,570	50.9	2,635	50,800	104%
Hodgdon H4831SC	40.5	2,405	41.6	2,460	42.8	2,520	43.9	2,575	45.0	2,630	50,900	91%
Vihtavuori N160	39.2	2,405	40.3	2,465	41.4	2,520	42.4	2,570	43.5	2,625	51,000	95%
IMR 8133	45.0	2,365	46.3	2,430	47.5	2,490	48.8	2,555	50.0	2,615	51,000	105%
Vihtavuori N170	43.8	2,385	45.0	2,440	46.3	2,500	47.5	2,560	48.7	2,615	51,000	102%
IMR 7828	41.0	2,385	42.1	2,440	43.3	2,500	44.4	2,555	45.5	2,610	50,800	92%
Vihtavuori N550	36.0	2,395	37.0	2,450	38.0	2,500	39.0	2,550	40.0	2,600	50,800	85%
Accurate 4350	37.4	2,370	38.4	2,425	39.5	2,480	40.5	2,535	41.5	2,585	50,900	87%

160 gr Bullet · 25" barrel

COAL: 2.955" • Bullet length: 1.255" • Seat depth: 0.464" • Usable capacity: 51.0 / 57.1 gr H_2O

Powder	STEP 1 · 90%		STEP 2		STEP 3		STEP 4		STEP 5 · LIMIT			
	gr	fps	gr	fps	gr	fps	gr	fps	gr	fps	psi	Fill
Vihtavuori N570	44.6	2,360	45.8	2,415	47.0	2,470	48.3	2,535	49.5	2,590	50,900	100%
Alliant Reloder 26	42.0	2,360	43.2	2,415	44.4	2,475	45.5	2,525	46.7	2,585	51,000	92%
Ramshot Grand	44.6	2,325	45.8	2,380	47.0	2,435	48.3	2,495	49.5	2,555	50,900	99%
Hodgdon Retumbo	44.5	2,325	45.7	2,375	47.0	2,435	48.2	2,495	49.4	2,550	50,900	101%
IMR 4831	39.5	2,330	40.6	2,385	41.7	2,440	42.8	2,495	43.9	2,550	50,900	92%
Vihtavuori N565	42.4	2,330	43.6	2,385	44.8	2,440	45.9	2,490	47.1	2,545	51,000	97%
Reload Swiss RS70	40.5	2,315	41.6	2,370	42.8	2,430	43.9	2,480	45.0	2,535	51,000	89%
Alliant Reloder 22	40.1	2,305	41.2	2,360	42.3	2,415	43.4	2,465	44.5	2,520	50,800	93%
Hodgdon H1000	42.7	2,295	43.9	2,355	45.0	2,405	46.2	2,460	47.4	2,520	51,000	101%
Alliant Reloder 19	39.5	2,300	40.6	2,355	41.7	2,410	42.8	2,460	43.9	2,515	51,000	91%
Reload Swiss RS76	44.5	2,295	45.7	2,345	47.0	2,405	48.2	2,460	49.4	2,515	50,900	98%
Hodgdon H4350	37.2	2,305	38.2	2,355	39.3	2,410	40.3	2,460	41.3	2,510	51,000	82%
Winchester StaBALL HD	45.1	2,280	46.4	2,335	47.6	2,390	48.9	2,450	50.1	2,505	50,800	100%
IMR 8133	44.5	2,270	45.7	2,325	47.0	2,385	48.2	2,445	49.4	2,500	50,900	101%
Vihtavuori N165	41.1	2,285	42.3	2,340	43.4	2,390	44.6	2,445	45.7	2,495	50,800	96%
Winchester Supreme 780	41.7	2,275	42.9	2,335	44.0	2,385	45.1	2,440	46.3	2,495	50,900	91%
Vihtavuori N560	40.1	2,270	41.2	2,320	42.4	2,375	43.5	2,425	44.6	2,475	50,900	91%
IMR 7977	42.2	2,235	43.4	2,290	44.5	2,345	45.7	2,400	46.9	2,460	50,800	100%
Vihtavuori N160	37.7	2,225	38.8	2,275	39.8	2,325	40.9	2,375	41.9	2,425	50,800	89%
Accurate 4350	36.1	2,200	37.1	2,250	38.1	2,300	39.1	2,350	40.1	2,400	50,800	82%

6.5x57 Mauser

Paul Mauser developed the 6.5x57mm Mauser in 1893 or 1894. He made it by necking down the 7x57mm Mauser case to accept .264-inch bullets. Many European 6.5mm cartridges of the period were military rounds. This one was intended as a sporting cartridge and was never adopted for military service. Even so it likely influenced later military 6.5mm designs such as the 6.5x58mm Vergueiro. A rimmed version called the 6.5x57mmR followed in 1910 for break-action and combination guns. Both versions are standardized by C.I.P. The rimmed version is rated for lower pressures.

Factory ammunition uses bullets from about 93 to 154 grains. Velocities range from roughly 2,670 to 3,320 fps depending on bullet weight. The cartridge has been popular with hunters in Germany and elsewhere in Central Europe. The rimmed version became common in drillings and other German combination guns. It remains in use for deer and other medium game.

Cartridge specifications	
Bullet Diameter	**0.264" (6.71 mm)**
Max Case Length	**2.232" (56.70 mm)**
Case Trim Length	**2.222" (56.45 mm)**
Max COAL	**3.228" (82.00 mm)**
Primer Pocket	**Large Rifle**
Standard Twist	**1:8"**
Case Capacity	**59.1 gr H_2O**
Max Pressure	**3,900 bar / 56,565 psi (C.I.P.)**

85 gr Bullet · 25" barrel

COAL: 2.796" • Bullet length: 0.828" • Seat depth: 0.264" • Usable capacity: 55.5 / 59.1 gr H_2O

Powder	STEP 1 · 90%		STEP 2		STEP 3		STEP 4		STEP 5 · LIMIT			
	gr	fps	gr	fps	gr	fps	gr	fps	gr	fps	psi	Fill
Hodgdon Leverevolution	43.8	3,265	45.0	3,340	46.3	3,420	47.5	3,490	48.7	3,565	56,500	84%
Winchester StaBALL 6.5	48.3	3,220	49.6	3,295	51.0	3,375	52.4	3,455	53.7	3,530	56,400	98%
Vihtavuori N550	45.8	3,230	47.1	3,300	48.3	3,370	49.6	3,440	50.9	3,515	56,500	96%
Accurate 4350	48.4	3,180	49.8	3,260	51.1	3,340	52.4	3,415	53.8	3,500	56,400	101%
Reload Swiss RS52	42.9	3,210	44.1	3,280	45.3	3,355	46.5	3,425	47.7	3,500	56,500	90%
Alliant Reloder 16	46.8	3,195	48.1	3,270	49.4	3,345	50.7	3,420	52.0	3,495	56,500	104%
Hodgdon BL-C(2)	43.4	3,200	44.6	3,275	45.8	3,350	47.0	3,420	48.2	3,495	56,300	87%
Hodgdon H4350	47.0	3,140	48.3	3,215	49.6	3,295	50.9	3,375	52.2	3,450	56,600	95%
Ramshot Hunter	48.3	3,130	49.6	3,205	51.0	3,285	52.4	3,365	53.7	3,440	56,500	103%
Accurate 4064	42.3	3,150	43.5	3,220	44.6	3,285	45.8	3,360	47.0	3,430	56,500	94%
Hodgdon Varget	41.4	3,150	42.5	3,215	43.7	3,290	44.9	3,365	46.0	3,430	56,400	86%
IMR 4895	41.0	3,155	42.1	3,220	43.3	3,295	44.4	3,360	45.5	3,425	56,400	85%
Hodgdon H414	46.1	3,120	47.4	3,195	48.7	3,270	49.9	3,340	51.2	3,420	56,400	94%
IMR 4064	41.2	3,140	42.4	3,215	43.5	3,280	44.6	3,345	45.8	3,415	56,300	88%
Norma 203B	41.4	3,125	42.5	3,190	43.7	3,260	44.9	3,335	46.0	3,400	56,500	90%
Vihtavuori N160	48.2	3,090	49.6	3,170	50.9	3,245	52.3	3,325	53.6	3,400	56,100	105%
Alliant Power Pro 4000-MR	48.2	3,080	49.6	3,160	50.9	3,235	52.3	3,315	53.6	3,395	56,300	98%
IMR 3031	38.6	3,110	39.7	3,175	40.8	3,245	41.8	3,305	42.9	3,375	56,400	83%
IMR 4831	47.7	3,035	49.0	3,110	50.4	3,195	51.7	3,275	53.0	3,355	56,300	103%
Vihtavuori N135	38.4	3,085	39.5	3,155	40.5	3,210	41.6	3,280	42.7	3,340	56,300	84%

100 gr Bullet · 25" barrel

COAL: 2.890" • Bullet length: 1.037" • Seat depth: 0.379" • Usable capacity: 54.1 / 59.1 gr H_2O

Powder	STEP 1 · 90%		STEP 2		STEP 3		STEP 4		STEP 5 · LIMIT			
	gr	fps	gr	fps	gr	fps	gr	fps	gr	fps	psi	Fill
Accurate 4350	46.4	3,020	47.7	3,090	49.0	3,165	50.2	3,235	51.5	3,310	56,600	99%
Winchester StaBALL 6.5	46.2	3,025	47.5	3,100	48.8	3,170	50.0	3,235	51.3	3,310	56,500	96%
Alliant Reloder 26	50.3	2,985	51.7	3,065	53.1	3,140	54.5	3,220	55.9	3,300	56,400	104%
Hodgdon Leverevolution	41.6	3,030	42.8	3,100	43.9	3,165	45.1	3,235	46.2	3,300	56,500	82%
Hodgdon SUPERFORMANCE	47.7	2,980	49.0	3,055	50.4	3,135	51.7	3,205	53.0	3,280	56,400	96%
Vihtavuori N555	47.2	2,980	48.5	3,055	49.8	3,130	51.1	3,205	52.4	3,280	56,300	104%
Alliant Reloder 23	47.1	2,970	48.4	3,040	49.7	3,110	51.0	3,185	52.3	3,260	53,800	105%
IMR 4350	45.1	2,965	46.4	3,040	47.6	3,105	48.9	3,180	50.1	3,250	56,400	99%
Ramshot Big Game	43.7	2,975	44.9	3,045	46.2	3,115	47.4	3,185	48.6	3,250	56,300	91%
Alliant Power Pro 4000-MR	46.3	2,925	47.6	2,995	48.8	3,060	50.1	3,135	51.4	3,210	56,400	97%
Winchester 760	44.1	2,935	45.3	3,000	46.5	3,070	47.8	3,140	49.0	3,210	56,500	93%
Norma MRP	47.8	2,910	49.1	2,980	50.5	3,055	51.8	3,130	53.1	3,205	56,300	102%
Vihtavuori N160	46.0	2,925	47.3	2,995	48.5	3,060	49.8	3,135	51.1	3,205	56,300	102%
IMR 4831	45.8	2,895	47.1	2,970	48.3	3,040	49.6	3,115	50.9	3,195	56,400	101%
IMR 4955	46.5	2,890	47.8	2,965	49.1	3,040	50.4	3,115	51.7	3,190	56,300	96%
Alliant Reloder 19	46.9	2,890	48.2	2,960	49.5	3,035	50.8	3,110	52.1	3,185	56,400	102%
Hodgdon Varget	39.2	2,925	40.3	2,990	41.4	3,055	42.4	3,115	43.5	3,180	56,300	84%
IMR 4895	38.5	2,910	39.6	2,970	40.6	3,030	41.7	3,095	42.8	3,160	56,600	82%
Shooters World SW4350	45.5	2,855	46.8	2,925	48.0	2,990	49.3	3,065	50.6	3,135	56,500	101%
IMR 3031	36.5	2,870	37.5	2,930	38.5	2,990	39.5	3,050	40.5	3,110	56,300	80%

107 gr Bullet · 25" barrel

COAL: 3.080" • Bullet length: 1.275" • Seat depth: 0.427" • Usable capacity: 53.7 / 59.1 gr H_2O

Powder	STEP 1 · 90%		STEP 2		STEP 3		STEP 4		STEP 5 · LIMIT			
	gr	fps	gr	fps	gr	fps	gr	fps	gr	fps	psi	Fill
Alliant Reloder 26	49.4	2,920	50.8	3,000	52.1	3,070	53.5	3,145	54.9	3,225	56,400	103%
Accurate 4350	45.4	2,935	46.6	3,000	47.9	3,075	49.1	3,140	50.4	3,215	56,400	98%
Alliant Reloder 23	46.7	2,920	48.0	2,990	49.3	3,060	50.6	3,135	51.9	3,205	55,500	105%
Winchester StaBALL 6.5	45.2	2,935	46.5	3,005	47.7	3,070	49.0	3,140	50.2	3,205	56,400	94%
Hodgdon SUPERFORMANCE	46.8	2,910	48.1	2,980	49.4	3,055	50.7	3,125	52.0	3,200	56,400	95%
Vihtavuori N555	46.1	2,915	47.4	2,985	48.7	3,055	49.9	3,125	51.2	3,195	56,500	102%
Hodgdon Leverevolution	40.6	2,925	41.7	2,990	42.9	3,060	44.0	3,120	45.1	3,185	56,500	80%
IMR 4350	44.1	2,885	45.3	2,950	46.5	3,015	47.8	3,090	49.0	3,155	56,600	98%
Ramshot Hunter	45.4	2,880	46.6	2,945	47.9	3,015	49.1	3,085	50.4	3,155	56,500	100%
Alliant Reloder 16	43.0	2,885	44.2	2,950	45.4	3,015	46.6	3,085	47.8	3,150	56,300	99%
IMR 4831	45.0	2,830	46.3	2,905	47.5	2,975	48.8	3,050	50.0	3,120	56,500	100%
IMR 4955	45.7	2,830	47.0	2,900	48.3	2,975	49.5	3,045	50.8	3,115	56,500	95%
Winchester 760	43.2	2,850	44.4	2,915	45.6	2,980	46.8	3,050	48.0	3,115	56,600	92%
Alliant Reloder 19	46.0	2,825	47.3	2,895	48.5	2,965	49.8	3,035	51.1	3,110	56,300	101%
Winchester StaBALL Match	39.4	2,830	40.5	2,890	41.6	2,950	42.7	3,015	43.8	3,075	56,600	92%
Winchester Supreme 780	49.1	2,775	50.5	2,850	51.8	2,920	53.1	2,990	54.5	3,070	56,400	102%
Hodgdon Varget	38.2	2,820	39.3	2,885	40.3	2,945	41.4	3,005	42.4	3,065	56,300	82%
Vihtavuori N165	47.2	2,790	48.5	2,855	49.8	2,925	51.1	2,995	52.4	3,065	54,300	105%
IMR 4064	37.8	2,805	38.8	2,865	39.9	2,925	41.0	2,985	42.0	3,045	56,300	84%
IMR 4895	37.4	2,795	38.5	2,860	39.5	2,915	40.5	2,975	41.6	3,040	56,500	80%

120 gr Bullet · 25" barrel

COAL: 3.030" • Bullet length: 1.131" • Seat depth: 0.334" • Usable capacity: 54.8 / 59.1 gr H_2O

Powder	STEP 1 · 90%		STEP 2		STEP 3		STEP 4		STEP 5 · LIMIT			
	gr	fps	gr	fps	gr	fps	gr	fps	gr	fps	psi	Fill
Alliant Reloder 26	48.8	2,820	50.1	2,890	51.5	2,960	52.9	3,035	54.2	3,105	56,300	99%
Vihtavuori N560	48.7	2,825	50.1	2,890	51.4	2,955	52.8	3,025	54.1	3,090	56,500	103%
Alliant Reloder 23	46.3	2,810	47.6	2,880	48.8	2,940	50.1	3,010	51.4	3,075	56,300	102%
Accurate 4350	44.6	2,800	45.8	2,865	47.0	2,930	48.3	2,995	49.5	3,060	56,300	94%
Hodgdon SUPERFORMANCE	46.1	2,795	47.4	2,860	48.7	2,930	49.9	2,995	51.2	3,060	56,400	91%
Ramshot Grand	50.9	2,745	52.3	2,815	53.7	2,885	55.1	2,960	56.5	3,035	56,400	105%
Vihtavuori N555	44.6	2,780	45.8	2,845	47.0	2,905	48.3	2,975	49.5	3,035	56,500	97%
Winchester StaBALL 6.5	44.3	2,780	45.5	2,840	46.8	2,910	48.0	2,970	49.2	3,035	56,500	90%
Alliant Reloder 22	46.5	2,760	47.8	2,825	49.1	2,895	50.4	2,965	51.7	3,030	56,500	100%
Reload Swiss RS76	51.1	2,735	52.5	2,800	54.0	2,875	55.4	2,945	56.8	3,020	56,400	104%
Alliant Reloder 19	45.5	2,730	46.8	2,800	48.0	2,865	49.3	2,930	50.6	3,005	56,500	98%
Reload Swiss RS70	46.2	2,735	47.5	2,805	48.8	2,870	50.0	2,935	51.3	3,005	56,300	94%
IMR 4831	44.6	2,735	45.8	2,800	47.0	2,865	48.3	2,935	49.5	3,000	56,500	97%
IMR 4350	43.0	2,740	44.2	2,800	45.4	2,865	46.6	2,925	47.8	2,990	56,500	94%
Ramshot Magnum	51.2	2,695	52.6	2,765	54.0	2,835	55.5	2,915	56.9	2,985	56,400	104%
Reload Swiss RS62	44.4	2,720	45.6	2,785	46.8	2,850	48.1	2,920	49.3	2,985	56,400	94%
Vihtavuori N170	49.8	2,710	51.2	2,775	52.5	2,835	53.9	2,900	55.3	2,970	55,700	105%
IMR 7828	46.9	2,695	48.2	2,765	49.5	2,830	50.8	2,900	52.1	2,965	56,500	96%
Vihtavuori N165	46.9	2,705	48.2	2,770	49.5	2,835	50.8	2,900	52.1	2,965	56,500	102%
Winchester StaBALL HD	50.9	2,650	52.3	2,715	53.7	2,785	55.1	2,855	56.5	2,925	53,800	105%

140 gr Bullet · 25" barrel

COAL: 3.180" • Bullet length: 1.303" • Seat depth: 0.355" • Usable capacity: 54.6 / 59.1 gr H_2O

Powder	STEP 1 · 90%		STEP 2		STEP 3		STEP 4		STEP 5 · LIMIT			
	gr	fps	gr	fps	gr	fps	gr	fps	gr	fps	psi	Fill
Alliant Reloder 26	47.0	2,660	48.3	2,725	49.6	2,785	50.9	2,850	52.2	2,915	56,500	96%
Vihtavuori N570	49.9	2,635	51.3	2,700	52.6	2,765	54.0	2,835	55.4	2,905	56,400	104%
Vihtavuori N565	48.0	2,625	49.3	2,685	50.6	2,745	52.0	2,815	53.3	2,880	56,400	102%
Ramshot Grand	49.4	2,605	50.8	2,670	52.1	2,735	53.5	2,805	54.9	2,875	56,600	102%
Hodgdon Retumbo	49.4	2,605	50.8	2,670	52.1	2,730	53.5	2,800	54.9	2,870	56,400	104%
Alliant Reloder 23	44.4	2,625	45.6	2,680	46.8	2,740	48.1	2,805	49.3	2,865	56,300	98%
Hodgdon SUPERFORMANCE	44.3	2,615	45.5	2,675	46.8	2,740	48.0	2,800	49.2	2,860	56,500	88%
Accurate 4350	42.7	2,610	43.9	2,670	45.0	2,720	46.2	2,780	47.4	2,845	56,500	91%
Vihtavuori N560	45.8	2,605	47.1	2,665	48.3	2,720	49.6	2,780	50.9	2,845	56,400	97%
Ramshot Magnum	49.6	2,570	51.0	2,640	52.4	2,705	53.7	2,770	55.1	2,835	56,400	101%
IMR 4831	43.0	2,575	44.2	2,635	45.4	2,695	46.6	2,755	47.8	2,820	56,500	94%
Reload Swiss RS70	44.5	2,575	45.7	2,635	47.0	2,700	48.2	2,760	49.4	2,820	56,400	91%
Reload Swiss RS62	42.8	2,560	44.0	2,620	45.1	2,675	46.3	2,740	47.5	2,800	56,500	90%
Hodgdon H4831SC	44.3	2,555	45.5	2,615	46.8	2,680	48.0	2,735	49.2	2,795	56,400	91%
Hodgdon H4831	44.1	2,535	45.3	2,595	46.5	2,655	47.8	2,715	49.0	2,775	56,300	96%
IMR 7828	44.7	2,530	46.0	2,595	47.2	2,655	48.5	2,720	49.7	2,775	56,400	92%
IMR 7977	47.0	2,510	48.3	2,575	49.6	2,640	50.9	2,700	52.2	2,765	56,400	104%
Hodgdon H4350	40.2	2,535	41.3	2,590	42.5	2,650	43.6	2,705	44.7	2,760	56,500	82%
IMR 4350	40.9	2,540	42.0	2,595	43.1	2,650	44.3	2,705	45.4	2,760	56,400	89%
Vihtavuori N170	47.4	2,515	48.7	2,570	50.0	2,630	51.4	2,695	52.7	2,750	56,400	100%

.270 Weatherby Magnum

Roy Weatherby developed the .270 Weatherby Magnum in 1943. It was one of the first cartridges in his line of belted magnums. The parent is the .300 H&H Magnum case. This case is shortened, blown out to reduce body taper and necked down to .277 caliber. It carries Weatherby's characteristic double-radius shoulder. For many years the cartridge was available chiefly in Weatherby's own rifles and ammunition. SAAMI approved it in 1994.

Factory loads drive 130- to 150-grain bullets at roughly 3,150 to 3,400 fps. This gives a flat trajectory for long shots. Lighter 110-grain loads exceed 3,500 fps. The .270 Weatherby is used mainly for deer, pronghorn, sheep and elk-size game in open and mountain country. Its high velocity and recoil make it poorly suited to high-volume varmint shooting. Weatherby continues to chamber rifles and load ammunition for it. It remains one of the faster .270-caliber factory cartridges.

Cartridge specifications	
Bullet Diameter	**0.277" (7.04 mm)**
Max Case Length	**2.549" (64.74 mm)**
Case Trim Length	**2.539" (64.49 mm)**
Max COAL	**3.295" (83.69 mm)**
Primer Pocket	**Large Rifle**
Standard Twist	**1:10"**
Case Capacity	**86.0 gr H_2O**
Max Pressure	**62,500 psi (SAAMI)**

100 gr Bullet · 25" barrel

COAL: 3.162" • Bullet length: 0.890" • Seat depth: 0.277" • Usable capacity: 81.9 / 86.0 gr H_2O

Powder	STEP 1 · 90%		STEP 2		STEP 3		STEP 4		STEP 5 · LIMIT			
	gr	fps	gr	fps	gr	fps	gr	fps	gr	fps	psi	Fill
Vihtavuori N560	71.6	3,400	73.6	3,480	75.6	3,565	77.6	3,645	79.6	3,730	62,400	102%
Alliant Reloder 26	71.5	3,370	73.5	3,455	75.5	3,545	77.4	3,625	79.4	3,715	62,400	97%
Alliant Reloder 23	67.9	3,370	69.8	3,450	71.7	3,530	73.5	3,610	75.4	3,695	62,500	100%
Hodgdon SUPERFORMANCE	67.3	3,360	69.2	3,445	71.0	3,520	72.9	3,605	74.8	3,690	62,300	89%
Ramshot Grand	74.5	3,315	76.6	3,405	78.7	3,495	80.7	3,580	82.8	3,675	62,500	103%
Alliant Reloder 22	68.9	3,330	70.8	3,410	72.8	3,500	74.7	3,580	76.6	3,665	62,400	99%
Hodgdon Hybrid 100V	63.6	3,345	65.4	3,425	67.2	3,505	68.9	3,585	70.7	3,665	62,300	97%
Norma 204	65.3	3,330	67.1	3,405	68.9	3,485	70.8	3,565	72.6	3,645	62,400	93%
Reload Swiss RS76	74.9	3,300	77.0	3,385	79.1	3,470	81.1	3,555	83.2	3,645	62,300	102%
Hodgdon H4831SC	68.7	3,315	70.6	3,395	72.5	3,475	74.4	3,560	76.3	3,640	62,400	94%
Vihtavuori N165	70.4	3,310	72.4	3,390	74.3	3,470	76.3	3,555	78.2	3,635	62,300	103%
Vihtavuori N565	73.4	3,265	75.4	3,350	77.5	3,445	79.5	3,530	81.5	3,620	62,400	105%
Vihtavuori N170	73.3	3,270	75.3	3,345	77.3	3,425	79.4	3,505	81.4	3,585	62,400	103%
Vihtavuori N570	75.2	3,220	77.3	3,310	79.3	3,395	81.4	3,490	83.5	3,585	60,900	105%
Alliant Reloder 19	66.5	3,255	68.3	3,335	70.2	3,420	72.1	3,500	73.9	3,580	62,400	96%
Winchester Supreme 780	71.1	3,240	73.1	3,325	75.0	3,405	77.0	3,490	79.0	3,580	62,400	97%
IMR 4350	63.0	3,275	64.8	3,350	66.5	3,425	68.3	3,500	70.0	3,575	62,300	92%
Accurate 4350	62.8	3,260	64.5	3,335	66.3	3,410	68.0	3,485	69.8	3,565	62,400	89%
IMR 4831	64.4	3,245	66.2	3,325	68.0	3,405	69.8	3,485	71.6	3,565	62,400	94%
Shooters World SW4350	65.3	3,240	67.1	3,315	68.9	3,390	70.7	3,465	72.5	3,540	62,400	96%

110 gr Bullet · 25" barrel

COAL: 3.240" • Bullet length: 1.045" • Seat depth: 0.354" • Usable capacity: 80.9 / 86.0 gr H_2O

Powder	STEP 1 · 90%		STEP 2		STEP 3		STEP 4		STEP 5 · LIMIT			
	gr	fps	gr	fps	gr	fps	gr	fps	gr	fps	psi	Fill
Alliant Reloder 26	69.7	3,265	71.6	3,345	73.6	3,425	75.5	3,510	77.4	3,590	62,400	96%
Vihtavuori N560	69.2	3,265	71.1	3,340	73.1	3,420	75.0	3,495	76.9	3,570	62,300	99%
Ramshot Grand	72.9	3,220	74.9	3,300	77.0	3,390	79.0	3,475	81.0	3,560	62,400	102%
Alliant Reloder 23	66.1	3,250	67.9	3,320	69.8	3,400	71.6	3,475	73.4	3,555	62,500	98%
Hodgdon SUPERFORMANCE	65.6	3,245	67.4	3,320	69.3	3,400	71.1	3,475	72.9	3,555	62,500	88%
Alliant Reloder 22	67.1	3,220	69.0	3,300	70.8	3,375	72.7	3,460	74.6	3,540	62,300	98%
Hodgdon Hybrid 100V	62.2	3,230	63.9	3,305	65.7	3,385	67.4	3,460	69.1	3,535	62,500	96%
IMR 7828SSC	68.3	3,205	70.2	3,285	72.1	3,365	74.0	3,445	75.9	3,525	62,500	98%
Hodgdon Retumbo	72.3	3,185	74.3	3,265	76.3	3,345	78.3	3,430	80.3	3,515	62,500	103%
IMR 7828	68.9	3,190	70.8	3,265	72.7	3,345	74.6	3,430	76.5	3,510	62,400	95%
Vihtavuori N165	68.3	3,185	70.2	3,265	72.1	3,340	74.0	3,415	75.9	3,495	62,500	101%
Ramshot Hunter	63.9	3,195	65.7	3,270	67.5	3,345	69.2	3,415	71.0	3,490	62,400	93%
Hodgdon H4831	67.0	3,175	68.8	3,250	70.7	3,325	72.6	3,405	74.4	3,485	62,500	99%
Ramshot Magnum	73.4	3,145	75.4	3,225	77.5	3,315	79.5	3,395	81.5	3,480	62,500	101%
Winchester Supreme 780	69.3	3,150	71.2	3,225	73.2	3,310	75.1	3,390	77.0	3,470	62,400	96%
Alliant Reloder 19	64.9	3,155	66.7	3,235	68.5	3,310	70.3	3,390	72.1	3,465	62,400	95%
Vihtavuori N170	71.0	3,140	73.0	3,215	75.0	3,290	76.9	3,365	78.9	3,440	62,400	101%
IMR 4350	61.1	3,150	62.8	3,220	64.5	3,290	66.2	3,360	67.9	3,435	62,500	90%
Hodgdon H4350	60.4	3,140	62.1	3,215	63.8	3,285	65.4	3,355	67.1	3,425	62,400	84%
Accurate 4350	61.0	3,135	62.7	3,205	64.4	3,280	66.1	3,350	67.8	3,420	62,400	88%

130 gr Bullet · 25" barrel

COAL: 3.240" • Bullet length: 1.201" • Seat depth: 0.510" • Usable capacity: 78.5 / 86.0 gr H_2O

Powder	STEP 1 · 90%		STEP 2		STEP 3		STEP 4		STEP 5 · LIMIT			
	gr	fps	gr	fps	gr	fps	gr	fps	gr	fps	psi	Fill
Alliant Reloder 26	66.0	3,055	67.8	3,125	69.7	3,205	71.5	3,275	73.3	3,350	62,400	94%
Vihtavuori N570	69.9	3,025	71.9	3,105	73.8	3,180	75.8	3,265	77.7	3,345	62,400	102%
Ramshot Grand	69.7	3,030	71.6	3,105	73.6	3,185	75.5	3,265	77.4	3,340	62,400	100%
Hodgdon H1000	68.3	3,020	70.2	3,095	72.1	3,170	74.0	3,250	75.9	3,325	61,500	105%
Accurate MagPro	68.7	3,005	70.6	3,085	72.5	3,160	74.4	3,235	76.3	3,315	62,400	99%
Alliant Reloder 22	63.6	3,015	65.4	3,090	67.2	3,160	68.9	3,230	70.7	3,305	62,400	96%
Alliant Reloder 25	67.2	2,995	69.1	3,070	71.0	3,145	72.8	3,220	74.7	3,300	62,300	104%
Alliant Reloder 23	62.4	3,015	64.1	3,080	65.8	3,150	67.6	3,225	69.3	3,290	62,400	96%
Vihtavuori N560	64.7	3,015	66.5	3,085	68.3	3,155	70.1	3,220	71.9	3,290	62,300	96%
Ramshot Magnum	69.9	2,975	71.9	3,050	73.8	3,125	75.8	3,205	77.7	3,285	62,400	99%
Reload Swiss RS70	63.3	3,000	65.0	3,065	66.8	3,140	68.5	3,210	70.3	3,285	62,300	90%
Vihtavuori N565	66.3	2,980	68.2	3,055	70.0	3,125	71.8	3,200	73.7	3,275	62,400	99%
Winchester StaBALL HD	70.4	2,970	72.4	3,045	74.3	3,120	76.3	3,195	78.2	3,275	62,300	101%
Hodgdon H4831SC	63.5	2,990	65.3	3,060	67.0	3,130	68.8	3,200	70.5	3,270	62,300	90%
IMR 8133	70.1	2,955	72.0	3,030	74.0	3,110	76.0	3,195	77.9	3,270	62,400	103%
Alliant Reloder 19	61.7	2,965	63.4	3,035	65.1	3,105	66.8	3,175	68.5	3,245	62,500	93%
Norma MRP	63.1	2,970	64.8	3,035	66.6	3,105	68.3	3,175	70.1	3,245	62,500	93%
Vihtavuori N165	64.2	2,955	66.0	3,025	67.8	3,095	69.5	3,160	71.3	3,230	62,300	97%
IMR 4831	59.9	2,945	61.5	3,010	63.2	3,080	64.8	3,150	66.5	3,220	62,400	91%
Vihtavuori N170	66.7	2,905	68.5	2,970	70.4	3,040	72.3	3,110	74.1	3,175	62,500	98%

140 gr Bullet · 25" barrel

COAL: 3.240" • Bullet length: 1.260" • Seat depth: 0.569" • Usable capacity: 77.7 / 86.0 gr H_2O

Powder	STEP 1 · 90%		STEP 2		STEP 3		STEP 4		STEP 5 · LIMIT			
	gr	fps	gr	fps	gr	fps	gr	fps	gr	fps	psi	Fill
Alliant Reloder 26	64.4	2,960	66.2	3,030	68.0	3,100	69.7	3,165	71.5	3,240	62,400	92%
Hodgdon H1000	67.1	2,945	69.0	3,015	70.8	3,090	72.7	3,165	74.6	3,240	62,300	104%
Ramshot Grand	68.2	2,940	70.1	3,015	72.0	3,090	73.9	3,165	75.8	3,240	62,300	99%
Vihtavuori N570	68.0	2,940	69.9	3,015	71.8	3,090	73.7	3,165	75.6	3,240	62,300	100%
Accurate MagPro	67.3	2,925	69.2	3,000	71.0	3,070	72.9	3,145	74.8	3,220	62,400	98%
Alliant Reloder 25	65.9	2,910	67.7	2,985	69.6	3,060	71.4	3,130	73.2	3,200	62,500	103%
Ramshot Magnum	68.5	2,895	70.4	2,970	72.3	3,045	74.2	3,115	76.1	3,195	62,400	98%
Alliant Reloder 22	62.0	2,915	63.7	2,980	65.5	3,055	67.2	3,120	68.9	3,190	62,300	94%
Hodgdon Retumbo	67.3	2,905	69.2	2,975	71.0	3,045	72.9	3,120	74.8	3,190	62,500	100%
IMR 7828SSC	62.7	2,900	64.5	2,970	66.2	3,035	68.0	3,105	69.7	3,175	62,400	93%
Winchester StaBALL HD	68.9	2,880	70.8	2,955	72.8	3,030	74.7	3,100	76.6	3,175	62,500	100%
Alliant Reloder 23	60.8	2,910	62.5	2,975	64.2	3,040	65.8	3,105	67.5	3,170	62,400	94%
IMR 7828	63.3	2,895	65.0	2,960	66.8	3,030	68.5	3,095	70.3	3,170	62,300	91%
Hodgdon H4831SC	62.0	2,890	63.7	2,960	65.5	3,030	67.2	3,095	68.9	3,160	62,500	89%
Vihtavuori N560	62.7	2,900	64.5	2,970	66.2	3,030	68.0	3,100	69.7	3,160	62,300	94%
Vihtavuori N565	64.2	2,885	66.0	2,955	67.8	3,025	69.5	3,090	71.3	3,160	62,500	96%
IMR 7977	66.0	2,870	67.8	2,940	69.7	3,015	71.5	3,085	73.3	3,155	62,400	102%
Winchester Supreme 780	64.1	2,875	65.9	2,945	67.7	3,015	69.4	3,085	71.2	3,155	62,400	92%
Hodgdon H4831	61.7	2,865	63.4	2,930	65.1	3,000	66.8	3,065	68.5	3,130	62,400	95%
Vihtavuori N165	62.5	2,850	64.2	2,915	66.0	2,985	67.7	3,045	69.4	3,115	62,500	96%

150 gr Bullet · 25" barrel

COAL: 3.222" • Bullet length: 1.279" • Seat depth: 0.606" • Usable capacity: 77.2 / 86.0 gr H_2O

Powder	STEP 1 · 90%		STEP 2		STEP 3		STEP 4		STEP 5 · LIMIT			
	gr	fps	gr	fps	gr	fps	gr	fps	gr	fps	psi	Fill
Vihtavuori N570	66.4	2,865	68.3	2,935	70.1	3,005	72.0	3,080	73.8	3,150	62,500	98%
Hodgdon H1000	65.9	2,865	67.7	2,930	69.6	3,005	71.4	3,075	73.2	3,145	62,500	103%
Ramshot Grand	67.1	2,860	68.9	2,930	70.8	3,000	72.7	3,075	74.5	3,145	62,300	98%
Accurate MagPro	66.2	2,850	68.0	2,920	69.8	2,990	71.7	3,060	73.5	3,135	62,400	97%
Alliant Reloder 26	62.9	2,865	64.7	2,930	66.4	2,995	68.2	3,065	69.9	3,135	62,400	91%
Alliant Reloder 25	64.6	2,830	66.4	2,895	68.2	2,965	70.0	3,035	71.8	3,105	62,300	101%
Ramshot Magnum	67.2	2,820	69.1	2,890	71.0	2,965	72.8	3,035	74.7	3,105	62,400	97%
Hodgdon Retumbo	66.0	2,820	67.8	2,885	69.7	2,955	71.5	3,025	73.3	3,095	62,400	99%
Alliant Reloder 22	60.7	2,825	62.4	2,890	64.1	2,955	65.7	3,020	67.4	3,085	62,400	93%
Winchester StaBALL HD	67.6	2,800	69.5	2,870	71.3	2,935	73.2	3,010	75.1	3,080	62,400	99%
Hodgdon Hybrid 100V	56.8	2,820	58.4	2,885	60.0	2,950	61.5	3,010	63.1	3,075	62,500	92%
IMR 7828	61.8	2,805	63.5	2,870	65.3	2,935	67.0	3,000	68.7	3,070	62,400	90%
IMR 7828SSC	61.3	2,810	63.0	2,875	64.7	2,940	66.4	3,005	68.1	3,070	62,500	92%
Winchester Supreme 780	62.6	2,790	64.3	2,855	66.1	2,920	67.8	2,985	69.6	3,055	62,300	91%
Alliant Reloder 19	59.0	2,785	60.6	2,850	62.3	2,915	63.9	2,980	65.6	3,050	62,500	90%
Vihtavuori N565	62.2	2,790	63.9	2,850	65.7	2,920	67.4	2,985	69.1	3,050	62,300	94%
Vihtavuori N560	61.0	2,795	62.7	2,860	64.4	2,920	66.1	2,980	67.8	3,045	62,400	92%
Hodgdon H4831	60.2	2,770	61.9	2,835	63.6	2,900	65.2	2,960	66.9	3,025	62,400	93%
IMR 4831	57.3	2,760	58.9	2,825	60.5	2,885	62.1	2,950	63.7	3,015	62,300	89%
Hodgdon H50BMG	71.6	2,695	73.6	2,765	75.5	2,835	77.5	2,905	79.5	2,980	59,200	105%

.270 Winchester

Winchester introduced the .270 Winchester in 1925 for its Model 54 bolt-action rifle. The cartridge was formed by necking down the .30-03 Springfield case to accept .277-inch bullets. It retains the slightly longer neck of that parent. This makes it a close relative of the .30-06 Springfield. The original factory load drove a 130-grain bullet at about 3,140 fps. That velocity was later reduced to about 3,060 fps.

Factory ammunition is commonly loaded with bullets from 100 to 160 grains. The 130- and 150-grain loads are by far the most popular. The .270 offers a flat trajectory with moderate recoil. Hunters use it widely for deer, sheep, pronghorn and other North American big game. Its popularity owed much to gun writer Jack O'Connor. He used and wrote about the cartridge in Outdoor Life for roughly 40 years. It remains one of the most widely chambered big-game cartridges. Ammunition is available from nearly every major manufacturer.

Cartridge specifications	
Bullet Diameter	**0.277" (7.04 mm)**
Max Case Length	**2.540" (64.52 mm)**
Case Trim Length	**2.530" (64.26 mm)**
Max COAL	**3.340" (84.84 mm)**
Primer Pocket	**Large Rifle**
Standard Twist	**1:10"**
Case Capacity	**67.0 gr H_2O**
Max Pressure	**65,000 psi (SAAMI)**

100 gr Bullet · 25" barrel

COAL: 3.075" • Bullet length: 0.967" • Seat depth: 0.432" • Usable capacity: 60.7 / 67.0 gr H_2O

Powder	STEP 1 · 90%		STEP 2		STEP 3		STEP 4		STEP 5 · LIMIT			
	gr	fps	gr	fps	gr	fps	gr	fps	gr	fps	psi	Fill
Hodgdon Leverevolution	49.7	3,290	51.1	3,370	52.5	3,445	53.8	3,515	55.2	3,590	64,900	87%
Vihtavuori N550	51.9	3,245	53.4	3,320	54.8	3,395	56.3	3,470	57.7	3,540	65,000	100%
Winchester StaBALL 6.5	54.2	3,225	55.7	3,305	57.2	3,380	58.7	3,460	60.2	3,540	64,800	100%
Hodgdon BL-C(2)	49.6	3,240	51.0	3,315	52.4	3,390	53.7	3,460	55.1	3,535	64,900	91%
Hodgdon H4350	54.1	3,210	55.6	3,290	57.1	3,370	58.6	3,455	60.1	3,535	64,900	100%
Hodgdon SUPERFORMANCE	56.7	3,195	58.3	3,280	59.9	3,365	61.4	3,445	63.0	3,535	65,000	102%
Reload Swiss RS52	49.1	3,245	50.5	3,320	51.8	3,390	53.1	3,460	54.5	3,535	64,800	94%
Alliant Reloder 15	48.5	3,215	49.9	3,290	51.2	3,360	52.5	3,425	53.9	3,500	64,900	95%
IMR 4064	47.9	3,210	49.2	3,280	50.5	3,350	51.9	3,420	53.2	3,490	64,800	94%
Winchester StaBALL Match	48.6	3,200	50.0	3,270	51.3	3,340	52.6	3,410	54.0	3,485	64,900	100%
Accurate 4064	48.2	3,175	49.6	3,250	50.9	3,320	52.3	3,395	53.6	3,465	64,700	98%
IMR 4350	53.4	3,150	54.9	3,230	56.3	3,305	57.8	3,385	59.3	3,465	62,300	105%
Accurate 2700	51.8	3,155	53.3	3,230	54.7	3,305	56.1	3,375	57.6	3,455	64,800	97%
Reload Swiss RS50	49.2	3,165	50.6	3,240	52.0	3,310	53.3	3,380	54.7	3,455	64,800	95%
Shooters World The Creed	48.2	3,155	49.5	3,225	50.9	3,300	52.2	3,370	53.5	3,440	64,900	92%
Hodgdon Varget	46.8	3,155	48.1	3,225	49.4	3,295	50.7	3,365	52.0	3,435	64,800	89%
Hodgdon H4831SC	56.7	3,100	58.3	3,180	59.9	3,265	61.4	3,345	63.0	3,430	64,800	104%
Alliant Power Pro 2000-MR	49.3	3,125	50.7	3,200	52.0	3,265	53.4	3,340	54.8	3,415	65,000	95%
Winchester 760	51.8	3,120	53.2	3,190	54.6	3,265	56.1	3,340	57.5	3,415	64,700	97%
Norma 202	45.8	3,140	47.1	3,205	48.3	3,270	49.6	3,335	50.9	3,405	64,900	91%

110 gr Bullet · 25" barrel

COAL: 3.165" • Bullet length: 1.045" • Seat depth: 0.420" • Usable capacity: 60.9 / 67.0 gr H_2O

Powder	STEP 1 · 90%		STEP 2		STEP 3		STEP 4		STEP 5 · LIMIT			
	gr	fps	gr	fps	gr	fps	gr	fps	gr	fps	psi	Fill
Hodgdon SUPERFORMANCE	55.9	3,115	57.5	3,195	59.0	3,270	60.5	3,350	62.1	3,435	65,000	100%
Hodgdon Leverevolution	48.5	3,145	49.9	3,220	51.2	3,285	52.5	3,355	53.9	3,425	64,700	85%
Reload Swiss RS70	57.1	3,090	58.7	3,170	60.3	3,255	61.8	3,335	63.4	3,420	64,700	105%
Hodgdon H4350	52.9	3,110	54.4	3,185	55.8	3,255	57.3	3,335	58.8	3,415	64,700	97%
Reload Swiss RS60	52.5	3,110	54.0	3,185	55.4	3,260	56.8	3,335	58.3	3,415	64,700	99%
Winchester StaBALL 6.5	53.2	3,110	54.7	3,185	56.2	3,260	57.6	3,330	59.1	3,405	64,700	98%
IMR 4350	53.1	3,095	54.6	3,170	56.0	3,240	57.5	3,320	59.0	3,395	64,800	104%
Accurate 4350	53.1	3,080	54.6	3,155	56.0	3,225	57.5	3,305	59.0	3,380	64,900	101%
Norma URP	52.3	3,070	53.8	3,150	55.2	3,225	56.6	3,300	58.1	3,380	64,800	105%
Alliant Reloder 15	47.2	3,075	48.5	3,140	49.8	3,205	51.1	3,275	52.4	3,340	64,700	92%
IMR 4064	46.7	3,075	48.0	3,140	49.3	3,205	50.6	3,270	51.9	3,340	64,800	91%
Alliant Power Pro 4000-MR	54.0	3,030	55.5	3,105	57.0	3,185	58.5	3,260	60.0	3,335	64,800	100%
Vihtavuori N150	47.0	3,045	48.3	3,110	49.6	3,175	50.9	3,240	52.2	3,310	64,800	96%
Reload Swiss RS50	48.2	3,035	49.6	3,105	50.9	3,170	52.3	3,240	53.6	3,305	64,700	92%
Winchester 760	50.9	3,015	52.3	3,085	53.8	3,160	55.2	3,230	56.6	3,305	65,000	96%
Norma 203B	46.1	3,030	47.4	3,100	48.7	3,165	49.9	3,230	51.2	3,295	65,000	91%
Vihtavuori N160	53.0	3,000	54.5	3,070	56.0	3,145	57.4	3,215	58.9	3,290	61,700	105%
Hodgdon Varget	45.7	3,020	47.0	3,090	48.3	3,155	49.5	3,220	50.8	3,285	64,900	87%
Alliant Reloder 19	54.2	2,970	55.7	3,050	57.2	3,125	58.7	3,205	60.2	3,280	62,000	105%
Alliant Power Pro 2000-MR	48.2	3,000	49.6	3,070	50.9	3,140	52.3	3,210	53.6	3,275	64,700	92%

130 gr Bullet · 25" barrel

COAL: 3.210" • Bullet length: 1.220" • Seat depth: 0.550" • Usable capacity: 59.1 / 67.0 gr H_2O

Powder	STEP 1 · 90%		STEP 2		STEP 3		STEP 4		STEP 5 · LIMIT			
	gr	fps	gr	fps	gr	fps	gr	fps	gr	fps	psi	Fill
Alliant Reloder 26	55.5	2,905	57.0	2,975	58.6	3,055	60.2	3,135	61.7	3,210	63,100	105%
Hodgdon SUPERFORMANCE	53.0	2,915	54.5	2,985	56.0	3,060	57.4	3,130	58.9	3,205	64,700	98%
Reload Swiss RS70	54.3	2,910	55.8	2,985	57.3	3,055	58.8	3,130	60.3	3,205	64,700	103%
Vihtavuori N555	51.9	2,920	53.4	2,990	54.8	3,060	56.3	3,130	57.7	3,200	64,900	105%
Reload Swiss RS60	49.9	2,910	51.3	2,980	52.6	3,045	54.0	3,115	55.4	3,185	65,000	96%
Hodgdon Hybrid 100V	49.8	2,895	51.2	2,965	52.5	3,030	53.9	3,100	55.3	3,175	64,600	105%
IMR 4831	51.9	2,880	53.4	2,955	54.8	3,025	56.3	3,105	57.7	3,175	65,000	105%
IMR 4955	52.7	2,875	54.2	2,950	55.7	3,025	57.1	3,095	58.6	3,170	64,700	100%
Hodgdon H4350	49.8	2,890	51.2	2,960	52.5	3,025	53.9	3,095	55.3	3,165	65,000	94%
Alliant Reloder 17	49.0	2,880	50.4	2,950	51.7	3,020	53.0	3,085	54.4	3,155	64,900	92%
IMR 4350	50.0	2,875	51.4	2,945	52.8	3,010	54.1	3,075	55.5	3,145	64,900	101%
Winchester StaBALL 6.5	50.3	2,875	51.7	2,945	53.1	3,010	54.5	3,075	55.9	3,145	65,000	95%
Accurate 4350	50.2	2,865	51.6	2,935	53.0	3,000	54.4	3,070	55.8	3,140	64,800	99%
Alliant Reloder 19	52.4	2,845	53.9	2,920	55.3	2,990	56.8	3,065	58.2	3,135	64,800	105%
Shooters World SW4350	51.4	2,820	52.8	2,885	54.3	2,960	55.7	3,025	57.1	3,095	63,900	105%
IMR 4007 SSC	48.3	2,815	49.6	2,875	51.0	2,945	52.4	3,015	53.7	3,080	64,900	97%
Vihtavuori N550	46.6	2,820	47.9	2,880	49.2	2,940	50.5	3,000	51.8	3,065	64,900	92%
Ramshot Big Game	47.3	2,805	48.6	2,870	50.0	2,935	51.3	3,000	52.6	3,060	64,900	91%
Winchester 760	48.1	2,795	49.4	2,860	50.8	2,925	52.1	2,990	53.4	3,050	64,700	93%
IMR 4064	43.7	2,810	44.9	2,870	46.1	2,930	47.3	2,990	48.5	3,045	64,800	88%

140 gr Bullet · 25" barrel

COAL: 3.200" • Bullet length: 1.248" • Seat depth: 0.588" • Usable capacity: 58.5 / 67.0 gr H_2O

Powder	STEP 1 · 90%		STEP 2		STEP 3		STEP 4		STEP 5 · LIMIT			
	gr	fps	gr	fps	gr	fps	gr	fps	gr	fps	psi	Fill
Alliant Reloder 26	54.8	2,845	56.3	2,920	57.8	2,990	59.4	3,065	60.9	3,140	64,900	105%
Reload Swiss RS70	53.1	2,825	54.6	2,895	56.0	2,965	57.5	3,035	59.0	3,110	64,800	102%
Hodgdon SUPERFORMANCE	51.8	2,825	53.3	2,895	54.7	2,960	56.1	3,030	57.6	3,100	64,900	96%
Vihtavuori N555	50.3	2,820	51.7	2,885	53.1	2,950	54.5	3,020	55.9	3,085	64,900	103%
IMR 4831	50.9	2,800	52.3	2,870	53.7	2,940	55.1	3,010	56.5	3,080	65,000	104%
Reload Swiss RS60	48.7	2,810	50.1	2,880	51.4	2,945	52.8	3,015	54.1	3,080	64,900	95%
Hodgdon Hybrid 100V	48.8	2,805	50.1	2,870	51.5	2,940	52.9	3,010	54.2	3,075	64,800	104%
Alliant Reloder 17	47.8	2,785	49.1	2,845	50.5	2,915	51.8	2,980	53.1	3,045	64,700	91%
Hodgdon H4350	48.3	2,785	49.6	2,845	51.0	2,915	52.4	2,980	53.7	3,045	64,800	93%
Alliant Reloder 19	51.2	2,765	52.6	2,830	54.0	2,900	55.5	2,970	56.9	3,040	64,700	103%
Alliant Reloder 23	50.9	2,775	52.3	2,840	53.7	2,905	55.1	2,970	56.5	3,040	63,200	105%
IMR 7828SSC	52.7	2,760	54.2	2,830	55.7	2,905	57.1	2,970	58.6	3,040	64,900	104%
Hodgdon H4831SC	52.0	2,760	53.5	2,830	54.9	2,895	56.3	2,960	57.8	3,035	65,000	99%
Accurate 4350	49.0	2,770	50.4	2,835	51.7	2,900	53.0	2,960	54.4	3,030	64,800	97%
Norma MRP	52.0	2,755	53.5	2,825	54.9	2,890	56.3	2,955	57.8	3,030	64,700	103%
IMR 4350	48.5	2,765	49.9	2,830	51.2	2,895	52.5	2,955	53.9	3,025	64,700	99%
Alliant Power Pro 4000-MR	50.1	2,740	51.5	2,805	52.9	2,870	54.3	2,940	55.7	3,005	64,900	97%
IMR 4451	48.4	2,745	49.8	2,810	51.1	2,875	52.4	2,935	53.8	3,005	64,700	96%
Vihtavuori N160	49.4	2,720	50.8	2,785	52.1	2,845	53.5	2,915	54.9	2,980	64,700	102%
Hodgdon H414	46.9	2,705	48.2	2,765	49.5	2,830	50.8	2,890	52.1	2,955	64,800	91%

150 gr Bullet · 25" barrel

COAL: 3.200" • Bullet length: 1.299" • Seat depth: 0.639" • Usable capacity: 57.9 / 67.0 gr H_2O

Powder	STEP 1 · 90%		STEP 2		STEP 3		STEP 4		STEP 5 · LIMIT			
	gr	fps	gr	fps	gr	fps	gr	fps	gr	fps	psi	Fill
Alliant Reloder 26	53.6	2,765	55.1	2,835	56.6	2,905	58.1	2,975	59.6	3,050	64,800	103%
Reload Swiss RS70	52.0	2,745	53.5	2,815	54.9	2,880	56.3	2,945	57.8	3,020	64,900	101%
Hodgdon SUPERFORMANCE	50.7	2,740	52.1	2,805	53.5	2,870	54.9	2,935	56.3	3,000	64,800	95%
IMR 4831	49.8	2,715	51.2	2,785	52.5	2,845	53.9	2,915	55.3	2,985	64,700	103%
IMR 4955	50.6	2,715	52.0	2,780	53.4	2,850	54.8	2,915	56.2	2,985	65,000	98%
Hodgdon Hybrid 100V	47.8	2,720	49.1	2,780	50.5	2,850	51.8	2,915	53.1	2,980	64,700	103%
Reload Swiss RS60	47.6	2,720	48.9	2,785	50.3	2,850	51.6	2,915	52.9	2,980	64,800	94%
Alliant Reloder 22	51.2	2,710	52.6	2,775	54.0	2,840	55.5	2,910	56.9	2,975	64,900	104%
Alliant Reloder 23	50.2	2,705	51.6	2,770	53.0	2,835	54.4	2,900	55.8	2,965	64,900	105%
Alliant Reloder 19	50.2	2,690	51.6	2,755	53.0	2,825	54.4	2,890	55.8	2,960	65,000	102%
IMR 7828SSC	51.5	2,685	52.9	2,745	54.4	2,815	55.8	2,880	57.2	2,950	65,000	103%
Winchester Supreme 780	53.1	2,665	54.6	2,735	56.0	2,800	57.5	2,870	59.0	2,940	64,900	103%
Hodgdon H4831	50.9	2,665	52.3	2,730	53.8	2,800	55.2	2,865	56.6	2,930	63,100	105%
Accurate 4350	47.8	2,675	49.1	2,735	50.5	2,805	51.8	2,865	53.1	2,925	64,700	96%
Vihtavuori N560	51.4	2,675	52.8	2,735	54.3	2,800	55.7	2,860	57.1	2,925	65,000	103%
IMR 4350	47.3	2,675	48.6	2,735	49.9	2,795	51.2	2,855	52.5	2,915	64,800	97%
Ramshot Hunter	48.3	2,645	49.6	2,705	51.0	2,770	52.4	2,835	53.7	2,900	64,800	99%
Vihtavuori N165	50.9	2,620	52.3	2,685	53.8	2,750	55.2	2,815	56.6	2,875	62,300	105%
Alliant Reloder 16	45.6	2,635	46.9	2,695	48.2	2,755	49.4	2,810	50.7	2,870	65,000	97%
Vihtavuori N160	48.2	2,630	49.5	2,690	50.9	2,750	52.2	2,810	53.5	2,870	64,800	100%

.270 WSM

Winchester introduced the .270 Winchester Short Magnum (WSM) in 2002 as part of its family of short magnum cartridges. It was created by necking down the .300 WSM case to hold .277-inch bullets. The .300 WSM had been introduced the previous year. The rimless and unbelted case was designed to work in short-action rifles. The .270 WSM was the first new commercial .270-caliber cartridge in about 60 years.

Factory loads drive 130-grain bullets at about 3,300 fps and 150-grain bullets at about 3,150 fps. Its performance comes close to that of the .270 Weatherby Magnum. The WSM is typically fired from 24-inch barrels in short actions. The belted Weatherby uses a long action and 26-inch barrels. The cartridge is used mainly for deer, pronghorn and other medium game at extended ranges. It remains in production with rifles and ammunition still available.

Cartridge specifications	
Bullet Diameter	**0.277" (7.04 mm)**
Max Case Length	**2.100" (53.34 mm)**
Case Trim Length	**2.090" (53.09 mm)**
Max COAL	**2.860" (72.64 mm)**
Primer Pocket	**Large Rifle**
Standard Twist	**1:10"**
Case Capacity	**76.6 gr H_2O**
Max Pressure	**65,000 psi (SAAMI)**

110 gr Bullet · 25" barrel

COAL: 2.720" • Bullet length: 1.045" • Seat depth: 0.425" • Usable capacity: 70.5 / 76.6 gr H_2O

Powder	STEP 1 · 90%		STEP 2		STEP 3		STEP 4		STEP 5 · LIMIT			
	gr	fps	gr	fps	gr	fps	gr	fps	gr	fps	psi	Fill
Winchester StaBALL 6.5	64.0	3,475	65.8	3,555	67.5	3,635	69.3	3,720	71.1	3,810	64,900	102%
Hodgdon SUPERFORMANCE	63.2	3,330	65.0	3,415	66.7	3,495	68.5	3,585	70.2	3,665	64,800	97%
IMR 4955	63.3	3,300	65.0	3,380	66.8	3,470	68.5	3,550	70.3	3,640	64,800	100%
Vihtavuori N555	61.7	3,310	63.4	3,390	65.2	3,475	66.9	3,560	68.6	3,640	64,800	104%
Reload Swiss RS62	62.0	3,290	63.7	3,370	65.5	3,460	67.2	3,540	68.9	3,625	64,900	102%
Norma URP	59.4	3,295	61.0	3,375	62.7	3,455	64.3	3,535	66.0	3,620	64,900	103%
IMR 4350	60.2	3,300	61.9	3,375	63.6	3,455	65.2	3,530	66.9	3,615	64,800	102%
Ramshot Hunter	61.7	3,295	63.4	3,370	65.2	3,455	66.9	3,535	68.6	3,615	64,800	103%
Accurate 4350	59.9	3,270	61.6	3,350	63.3	3,430	64.9	3,505	66.6	3,585	64,900	99%
Alliant Reloder 16	58.5	3,280	60.1	3,355	61.8	3,430	63.4	3,505	65.0	3,580	64,900	102%
Ramshot Big Game	57.8	3,270	59.4	3,345	61.0	3,415	62.6	3,490	64.2	3,565	64,800	93%
Vihtavuori N160	61.1	3,240	62.8	3,315	64.5	3,395	66.2	3,475	67.9	3,555	64,800	105%
Alliant Reloder 23	61.3	3,235	63.0	3,310	64.7	3,390	66.4	3,465	68.1	3,550	61,400	105%
IMR 7828SSC	64.0	3,215	65.8	3,295	67.5	3,375	69.3	3,460	71.1	3,545	62,700	105%
Hodgdon H4350	58.1	3,225	59.7	3,300	61.3	3,375	63.0	3,455	64.6	3,530	65,000	92%
IMR 7828	64.4	3,185	66.2	3,265	68.0	3,350	69.7	3,430	71.5	3,515	64,900	102%
Winchester 760	57.9	3,210	59.5	3,285	61.1	3,360	62.7	3,435	64.3	3,510	64,800	94%
Hodgdon Hybrid 100V	57.2	3,200	58.8	3,275	60.4	3,350	61.9	3,425	63.5	3,505	64,900	101%
Hodgdon H4831SC	61.9	3,175	63.6	3,255	65.3	3,330	67.1	3,415	68.8	3,495	64,800	98%
Alliant Reloder 15	52.8	3,210	54.3	3,280	55.8	3,350	57.2	3,415	58.7	3,485	64,900	89%

130 gr Bullet · 25" barrel

COAL: 2.700" • Bullet length: 1.220" • Seat depth: 0.620" • Usable capacity: 68.0 / 76.6 gr H_2O

Powder	STEP 1 · 90%		STEP 2		STEP 3		STEP 4		STEP 5 · LIMIT			
	gr	fps	gr	fps	gr	fps	gr	fps	gr	fps	psi	Fill
Winchester StaBALL 6.5	60.2	3,195	61.9	3,270	63.6	3,345	65.2	3,420	66.9	3,500	64,900	99%
Hodgdon SUPERFORMANCE	59.8	3,105	61.5	3,185	63.1	3,255	64.8	3,335	66.4	3,410	64,900	96%
IMR 4955	59.9	3,085	61.6	3,165	63.3	3,240	64.9	3,315	66.6	3,395	64,800	99%
Reload Swiss RS62	58.8	3,080	60.4	3,155	62.0	3,225	63.7	3,305	65.3	3,380	65,000	100%
Alliant Reloder 26	61.7	3,065	63.4	3,140	65.1	3,215	66.8	3,295	68.5	3,370	64,900	101%
Norma URP	55.9	3,075	57.5	3,150	59.0	3,220	60.5	3,290	62.1	3,370	64,800	100%
Reload Swiss RS70	60.3	3,060	62.0	3,135	63.6	3,210	65.3	3,290	67.0	3,365	64,800	99%
Alliant Reloder 23	59.0	3,055	60.6	3,130	62.3	3,205	63.9	3,275	65.6	3,355	64,900	105%
Vihtavuori N560	61.4	3,060	63.1	3,130	64.8	3,205	66.5	3,275	68.2	3,350	62,200	105%
Norma 204	57.7	3,050	59.3	3,120	60.9	3,195	62.5	3,265	64.1	3,340	64,800	99%
IMR 4350	56.4	3,050	58.0	3,120	59.5	3,185	61.1	3,260	62.7	3,335	64,800	99%
Accurate 4350	56.4	3,035	58.0	3,105	59.5	3,170	61.1	3,245	62.7	3,320	64,800	96%
Alliant Power Pro 4000-MR	58.3	3,025	59.9	3,100	61.5	3,170	63.2	3,245	64.8	3,320	64,900	97%
Alliant Reloder 19	58.6	3,015	60.2	3,090	61.8	3,165	63.5	3,240	65.1	3,315	64,900	102%
IMR 4831	57.3	3,015	58.9	3,090	60.5	3,165	62.1	3,235	63.7	3,315	64,800	101%
IMR 4007 SSC	54.7	2,990	56.2	3,060	57.8	3,130	59.3	3,200	60.8	3,270	64,900	96%
Hodgdon H4831	59.0	2,965	60.6	3,040	62.3	3,115	63.9	3,185	65.5	3,260	64,900	103%
Hodgdon H4831SC	58.6	2,970	60.2	3,040	61.8	3,110	63.5	3,185	65.1	3,260	65,000	96%
Shooters World SW4350	57.3	2,955	58.9	3,025	60.5	3,095	62.1	3,170	63.7	3,240	64,900	102%
Vihtavuori N165	59.8	2,955	61.5	3,030	63.1	3,100	64.8	3,170	66.4	3,240	63,600	105%

150 gr Bullet · 25" barrel

COAL: 2.670" • Bullet length: 1.306" • Seat depth: 0.736" • Usable capacity: 66.5 / 76.6 gr H_2O

Powder	STEP 1 · 90%		STEP 2		STEP 3		STEP 4		STEP 5 · LIMIT			
	gr	fps	gr	fps	gr	fps	gr	fps	gr	fps	psi	Fill
Winchester StaBALL 6.5	57.1	2,955	58.7	3,025	60.3	3,090	61.8	3,155	63.4	3,225	64,700	96%
IMR 4955	57.4	2,900	59.0	2,970	60.6	3,040	62.2	3,110	63.8	3,185	64,900	96%
Hodgdon SUPERFORMANCE	57.0	2,905	58.6	2,975	60.1	3,040	61.7	3,110	63.3	3,180	64,800	93%
Reload Swiss RS62	56.3	2,895	57.8	2,960	59.4	3,030	61.0	3,100	62.5	3,170	65,000	98%
Alliant Reloder 26	58.9	2,880	60.5	2,950	62.2	3,025	63.8	3,095	65.4	3,165	64,800	99%
Reload Swiss RS70	57.7	2,875	59.3	2,945	60.9	3,015	62.5	3,085	64.1	3,155	64,800	97%
Alliant Reloder 22	57.4	2,870	59.0	2,940	60.6	3,005	62.2	3,075	63.8	3,150	64,800	102%
Accurate MagPro	61.6	2,850	63.3	2,920	65.0	2,995	66.7	3,070	68.4	3,145	61,300	105%
Vihtavuori N560	58.7	2,875	60.3	2,940	62.0	3,010	63.6	3,075	65.2	3,140	64,800	102%
Alliant Reloder 23	56.3	2,860	57.8	2,925	59.4	2,990	61.0	3,060	62.5	3,125	64,900	102%
IMR 7828SSC	57.9	2,850	59.5	2,915	61.1	2,985	62.7	3,055	64.3	3,125	64,700	100%
Alliant Reloder 19	56.1	2,845	57.6	2,910	59.2	2,980	60.8	3,050	62.3	3,115	64,800	99%
IMR 4831	55.0	2,840	56.5	2,905	58.0	2,970	59.6	3,040	61.1	3,110	64,800	99%
Reload Swiss RS76	62.3	2,820	64.0	2,885	65.8	2,960	67.5	3,035	69.2	3,105	61,400	105%
IMR 4350	53.5	2,835	55.0	2,900	56.5	2,965	57.9	3,025	59.4	3,090	64,800	96%
Hodgdon H4831	56.2	2,780	57.8	2,850	59.3	2,915	60.9	2,985	62.4	3,050	64,900	101%
Hodgdon H4831SC	55.9	2,780	57.5	2,850	59.0	2,915	60.5	2,975	62.1	3,045	64,700	94%
Vihtavuori N165	57.0	2,770	58.6	2,835	60.1	2,895	61.7	2,960	63.3	3,030	64,700	102%
Vihtavuori N170	60.4	2,765	62.1	2,830	63.8	2,895	65.4	2,960	67.1	3,030	63,800	105%
Hodgdon H4350	51.4	2,775	52.8	2,835	54.3	2,900	55.7	2,960	57.1	3,020	64,700	87%

6.8 Western

Winchester Repeating Arms and Browning introduced the 6.8 Western in 2021. The case is essentially a .270 Winchester Short Magnum (WSM) with the shoulder moved back slightly. This allows longer bullets to be seated within short-action magazine length. The cartridge uses .277-inch bullets. It is intended for barrels with a 1:7.5- or 1:8-inch twist. That rate is fast enough to stabilize long heavy bullets of 165 to 175 grains with high ballistic coefficients. SAAMI has standardized the cartridge.

Winchester's 165-grain AccuBond Long Range load is listed at about 2,970 fps from a 24-inch barrel. Compared with the .270 Winchester the 6.8 Western offers a flatter trajectory and less wind drift beyond about 600 yards. Its heavier bullets account for the difference. It is designed for long-range target shooting and for big-game hunting of deer, elk and similar game. Rifles and ammunition are available from Winchester, Browning and other manufacturers.

Cartridge specifications	
Bullet Diameter	**0.277" (7.04 mm)**
Max Case Length	**2.020" (51.31 mm)**
Case Trim Length	**2.010" (51.05 mm)**
Max COAL	**2.955" (75.06 mm)**
Primer Pocket	**Large Rifle**
Standard Twist	**1:8"**
Case Capacity	**73.5 gr H_2O**
Max Pressure	**65,000 psi (SAAMI)**

130 gr Bullet · 25" barrel

COAL: 2.700" • Bullet length: 1.234" • Seat depth: 0.554" • Usable capacity: 65.6 / 73.5 gr H_2O

Powder	STEP 1 · 90%		STEP 2		STEP 3		STEP 4		STEP 5 · LIMIT			
	gr	fps	gr	fps	gr	fps	gr	fps	gr	fps	psi	Fill
Accurate 4350	55.6	3,070	57.1	3,140	58.7	3,215	60.3	3,290	61.8	3,360	64,800	99%
Alliant Reloder 26	59.4	3,035	61.0	3,105	62.7	3,185	64.3	3,260	66.0	3,340	64,700	101%
Vihtavuori N560	59.2	3,035	60.9	3,110	62.5	3,180	64.2	3,255	65.8	3,325	62,500	105%
Alliant Reloder 23	56.5	3,015	58.1	3,090	59.6	3,160	61.2	3,235	62.8	3,310	64,800	104%
Winchester StaBALL 6.5	54.5	3,015	56.0	3,085	57.5	3,150	59.1	3,225	60.6	3,295	64,900	93%
Ramshot Hunter	55.3	2,995	56.8	3,065	58.3	3,135	59.9	3,210	61.4	3,280	65,000	99%
Alliant Reloder 22	56.8	2,975	58.4	3,050	60.0	3,125	61.5	3,195	63.1	3,270	65,000	102%
Vihtavuori N555	53.8	2,975	55.3	3,040	56.8	3,110	58.3	3,180	59.8	3,250	64,700	98%
Hodgdon SUPERFORMANCE	55.1	2,965	56.6	3,035	58.2	3,110	59.7	3,175	61.2	3,245	64,900	91%
Norma 204	54.0	2,955	55.5	3,025	57.0	3,095	58.5	3,165	60.0	3,235	64,800	96%
Hodgdon H4831SC	56.3	2,935	57.8	3,005	59.4	3,080	61.0	3,150	62.5	3,220	64,900	96%
Winchester Supreme 780	58.9	2,920	60.5	2,995	62.2	3,070	63.8	3,145	65.4	3,220	65,000	100%
Reload Swiss RS76	61.4	2,915	63.1	2,990	64.8	3,060	66.5	3,140	68.2	3,215	62,600	105%
IMR 4350	52.5	2,945	54.0	3,010	55.4	3,075	56.8	3,140	58.3	3,210	64,800	95%
Alliant Power Pro 4000-MR	54.4	2,925	55.9	2,990	57.4	3,060	58.9	3,130	60.4	3,200	65,000	94%
IMR 7828SSC	56.3	2,905	57.8	2,970	59.4	3,045	61.0	3,115	62.5	3,185	65,000	99%
Vihtavuori N160	53.6	2,900	55.1	2,970	56.5	3,030	58.0	3,100	59.5	3,165	64,800	98%
IMR 4955	53.8	2,880	55.3	2,950	56.8	3,020	58.3	3,090	59.8	3,160	64,800	92%
Vihtavuori N170	59.6	2,875	61.3	2,945	62.9	3,010	64.5	3,075	66.2	3,150	62,400	105%
Vihtavuori N550	48.4	2,860	49.8	2,920	51.1	2,980	52.4	3,035	53.8	3,100	64,900	86%

140 gr Bullet · 25" barrel

COAL: 2.685" • Bullet length: 1.254" • Seat depth: 0.589" • Usable capacity: 65.0 / 73.5 gr H_2O

Powder	STEP 1 · 90%		STEP 2		STEP 3		STEP 4		STEP 5 · LIMIT			
	gr	fps	gr	fps	gr	fps	gr	fps	gr	fps	psi	Fill
Alliant Reloder 26	58.1	2,945	59.7	3,015	61.3	3,085	63.0	3,165	64.6	3,240	65,000	100%
Accurate 4350	54.3	2,960	55.8	3,030	57.3	3,100	58.8	3,165	60.3	3,235	64,900	97%
Vihtavuori N560	58.2	2,955	59.8	3,020	61.5	3,095	63.1	3,165	64.7	3,235	64,900	104%
Alliant Reloder 23	55.2	2,915	56.7	2,985	58.3	3,055	59.8	3,125	61.3	3,190	64,800	102%
Accurate MagPro	60.1	2,870	61.8	2,950	63.5	3,025	65.1	3,100	66.8	3,175	62,100	105%
Alliant Reloder 22	55.4	2,880	57.0	2,950	58.5	3,020	60.0	3,085	61.6	3,160	64,800	101%
Ramshot Hunter	53.9	2,885	55.4	2,955	56.9	3,020	58.4	3,090	59.9	3,160	64,800	98%
Winchester StaBALL 6.5	53.1	2,900	54.6	2,965	56.0	3,030	57.5	3,095	59.0	3,160	64,900	92%
Reload Swiss RS76	60.8	2,855	62.5	2,925	64.2	3,000	65.9	3,075	67.6	3,150	64,800	105%
Norma URP	50.9	2,875	52.3	2,940	53.7	3,005	55.1	3,075	56.5	3,140	64,800	95%
Vihtavuori N565	58.4	2,850	60.0	2,920	61.7	2,995	63.3	3,065	64.9	3,140	61,600	105%
Hodgdon SUPERFORMANCE	53.7	2,860	55.2	2,930	56.7	2,995	58.2	3,065	59.7	3,130	64,800	90%
Hodgdon H4831SC	55.0	2,840	56.5	2,910	58.0	2,975	59.6	3,045	61.1	3,115	64,900	95%
IMR 4350	51.0	2,830	52.4	2,895	53.9	2,960	55.3	3,025	56.7	3,090	64,800	94%
IMR 7828SSC	54.7	2,805	56.2	2,870	57.8	2,940	59.3	3,005	60.8	3,075	64,800	97%
Hodgdon H4831	54.4	2,800	55.9	2,865	57.4	2,930	58.9	3,000	60.4	3,070	64,900	100%
Vihtavuori N170	58.8	2,800	60.4	2,865	62.0	2,930	63.7	3,000	65.3	3,065	64,900	105%
Alliant Reloder 16	49.6	2,810	51.0	2,870	52.4	2,935	53.7	2,990	55.1	3,055	65,000	94%
Alliant Reloder 25	56.3	2,760	57.8	2,825	59.4	2,895	61.0	2,965	62.5	3,035	62,500	105%
IMR 8133	59.0	2,725	60.6	2,795	62.3	2,870	63.9	2,940	65.6	3,015	63,600	105%

175 gr Bullet · 25" barrel

COAL: 2.940" • Bullet length: 1.369" • Seat depth: 0.449" • Usable capacity: 67.1 / 73.5 gr H_2O

Powder	STEP 1 · 90%		STEP 2		STEP 3		STEP 4		STEP 5 · LIMIT			
	gr	fps	gr	fps	gr	fps	gr	fps	gr	fps	psi	Fill
Ramshot Magnum	62.0	2,740	63.7	2,810	65.5	2,880	67.2	2,950	68.9	3,025	64,800	103%
Accurate MagPro	59.8	2,710	61.5	2,780	63.1	2,845	64.8	2,915	66.4	2,985	64,800	101%
Ramshot Grand	60.5	2,710	62.2	2,780	63.9	2,850	65.5	2,915	67.2	2,985	65,000	102%
Vihtavuori N570	58.9	2,695	60.5	2,755	62.2	2,825	63.8	2,890	65.4	2,955	64,900	100%
Alliant Reloder 26	55.7	2,675	57.3	2,740	58.8	2,805	60.4	2,870	61.9	2,930	64,800	93%
Hodgdon Retumbo	59.2	2,660	60.9	2,725	62.5	2,790	64.2	2,855	65.8	2,920	64,800	102%
Vihtavuori N568	59.2	2,625	60.9	2,695	62.5	2,765	64.2	2,835	65.8	2,900	64,900	101%
Winchester StaBALL HD	59.9	2,615	61.5	2,675	63.2	2,745	64.8	2,805	66.5	2,875	65,000	101%
Reload Swiss RS76	59.0	2,610	60.6	2,675	62.3	2,740	63.9	2,800	65.6	2,870	64,800	99%
Vihtavuori N565	55.1	2,615	56.6	2,675	58.2	2,740	59.7	2,800	61.2	2,860	64,900	96%
Alliant Reloder 23	52.6	2,620	54.0	2,675	55.5	2,735	57.0	2,800	58.4	2,855	64,800	94%
Vihtavuori N560	54.3	2,620	55.8	2,675	57.3	2,735	58.8	2,790	60.3	2,850	64,800	94%
Winchester Supreme 780	55.2	2,600	56.7	2,660	58.3	2,725	59.8	2,785	61.3	2,845	64,800	92%
Hodgdon H1000	56.1	2,590	57.6	2,645	59.2	2,710	60.8	2,775	62.3	2,835	64,800	101%
IMR 4831	51.3	2,600	52.7	2,655	54.1	2,715	55.6	2,780	57.0	2,835	65,000	91%
Alliant Reloder 25	55.4	2,575	57.0	2,640	58.5	2,700	60.0	2,760	61.6	2,825	64,800	100%
Ramshot Hunter	51.5	2,590	52.9	2,650	54.4	2,710	55.8	2,765	57.2	2,825	64,800	90%
IMR 8133	58.1	2,560	59.7	2,625	61.3	2,685	63.0	2,755	64.6	2,820	64,900	100%
IMR 7977	55.6	2,540	57.1	2,595	58.7	2,660	60.3	2,725	61.8	2,785	64,900	100%
IMR 7828SSC	52.1	2,540	53.5	2,595	55.0	2,655	56.5	2,715	57.9	2,775	65,000	90%

6.8mm Remington SPC

Remington developed the 6.8mm Remington Special Purpose Cartridge (SPC) between 2002 and 2004. It worked with members of the U.S. Army Marksmanship Unit and U.S. Special Operations Command. The goal was better terminal performance from short-barreled rifles and carbines than the 5.56x45mm NATO offered. The new round also had to fit standard M16- and M4-pattern magazine wells. The case was derived from the .30 Remington. It was shortened and necked down to accept .277-inch bullets.

With a 115-grain bullet the 6.8 SPC reaches roughly 2,575 fps from a 16-inch barrel. From a 24-inch barrel it reaches about 2,800 fps. It saw limited military use but was not adopted for general service. Instead it became a popular alternative chambering for AR-15-type rifles. Hunters especially favor it for deer and feral hogs. Some law enforcement agencies also adopted it. Rifles, ammunition and components remain available from commercial manufacturers.

Cartridge specifications	
Bullet Diameter	**0.277" (7.04 mm)**
Max Case Length	**1.686" (42.84 mm)**
Case Trim Length	**1.676" (42.58 mm)**
Max COAL	**2.260" (57.40 mm)**
Primer Pocket	**Small Rifle**
Standard Twist	**1:10"**
Case Capacity	**35.5 gr H_2O**
Max Pressure	**55,000 psi (SAAMI)**

85 gr Bullet · 25" barrel

COAL: 2.230" • Bullet length: 0.937" • Seat depth: 0.394" • Usable capacity: 29.5 / 35.5 gr H_2O

Powder	STEP 1 · 90%		STEP 2		STEP 3		STEP 4		STEP 5 · LIMIT			
	gr	fps	gr	fps	gr	fps	gr	fps	gr	fps	psi	Fill
Shooters World SBR-SOCOM	23.1	2,840	23.8	2,910	24.4	2,970	25.1	3,035	25.7	3,095	54,700	90%
Hodgdon CFE BLK	26.2	2,825	26.9	2,890	27.6	2,955	28.4	3,025	29.1	3,090	55,000	101%
Alliant Power Pro 1200-R	27.3	2,750	28.1	2,820	28.8	2,880	29.6	2,955	30.3	3,015	54,700	105%
Alliant Power Pro 300-MP	21.2	2,765	21.8	2,830	22.4	2,890	23.0	2,950	23.6	3,010	54,900	89%
Shooters World AR Plus	27.5	2,695	28.3	2,765	29.1	2,835	29.8	2,900	30.6	2,970	53,800	105%
Accurate LT-30	25.8	2,695	26.5	2,760	27.3	2,830	28.0	2,895	28.7	2,955	54,600	98%
Hodgdon H4198	24.3	2,685	25.0	2,750	25.6	2,805	26.3	2,870	27.0	2,935	52,800	105%
Alliant Reloder 7	24.9	2,670	25.6	2,735	26.3	2,800	27.0	2,865	27.7	2,925	54,500	100%
Vihtavuori N120	22.8	2,665	23.4	2,720	24.1	2,790	24.7	2,845	25.3	2,900	54,600	100%
Accurate 1680	23.7	2,645	24.4	2,710	25.0	2,765	25.6	2,820	26.3	2,885	54,500	92%
Hodgdon H335	28.2	2,570	29.0	2,640	29.8	2,705	30.5	2,765	31.3	2,835	52,600	105%
Vihtavuori N110	18.1	2,585	18.6	2,640	19.1	2,695	19.6	2,750	20.1	2,800	55,000	80%
Hodgdon H4227	18.6	2,465	19.1	2,515	19.6	2,570	20.2	2,630	20.7	2,680	54,600	80%

90 gr Bullet · 25" barrel

COAL: 2.250" • Bullet length: 0.846" • Seat depth: 0.283" • Usable capacity: 31.4 / 35.5 gr H_2O

Powder	STEP 1 · 90%		STEP 2		STEP 3		STEP 4		STEP 5 · LIMIT			
	gr	fps	gr	fps	gr	fps	gr	fps	gr	fps	psi	Fill
Hodgdon CFE BLK	26.9	2,835	27.6	2,895	28.4	2,960	29.1	3,020	29.9	3,090	54,800	98%
Shooters World SBR-SOCOM	23.7	2,840	24.4	2,910	25.0	2,965	25.6	3,020	26.3	3,085	54,900	86%
Alliant Power Pro 1200-R	28.1	2,785	28.9	2,850	29.6	2,910	30.4	2,975	31.2	3,045	54,800	101%
Norma 200	27.3	2,760	28.1	2,830	28.8	2,890	29.6	2,955	30.3	3,015	53,400	105%
Shooters World AR Plus	28.6	2,755	29.4	2,820	30.2	2,885	31.0	2,950	31.8	3,015	54,800	103%
Hodgdon H4198	25.4	2,740	26.1	2,800	26.8	2,860	27.5	2,920	28.2	2,985	54,900	103%
Alliant Power Pro 300-MP	21.6	2,750	22.2	2,810	22.8	2,870	23.4	2,925	24.0	2,980	54,700	85%
Accurate LT-30	26.6	2,720	27.4	2,790	28.1	2,850	28.9	2,915	29.6	2,975	54,700	95%
Ramshot X-Terminator	29.3	2,725	30.1	2,790	30.9	2,850	31.7	2,915	32.5	2,975	52,300	105%
Alliant Reloder 7	25.7	2,705	26.4	2,765	27.1	2,825	27.8	2,885	28.5	2,945	54,900	96%
Shooters World The Patriot	28.4	2,675	29.2	2,740	30.0	2,805	30.8	2,870	31.6	2,930	51,700	105%
Accurate 2015	27.7	2,665	28.5	2,730	29.3	2,800	30.0	2,855	30.8	2,920	54,600	102%
Hodgdon H335	29.5	2,655	30.3	2,720	31.1	2,785	32.0	2,855	32.8	2,920	54,800	103%
Accurate LT-32	26.9	2,660	27.6	2,720	28.4	2,785	29.1	2,845	29.9	2,910	53,700	105%
Vihtavuori N120	23.4	2,670	24.0	2,725	24.7	2,785	25.4	2,850	26.0	2,900	54,800	96%
Accurate 1680	24.3	2,655	25.0	2,715	25.6	2,765	26.3	2,825	27.0	2,885	54,600	89%
Accurate 2495	29.4	2,585	30.2	2,650	31.1	2,720	31.9	2,785	32.7	2,855	52,200	105%
Shooters World Tactical Rifle	28.8	2,590	29.6	2,655	30.4	2,720	31.2	2,785	32.0	2,850	52,000	105%

100 gr Bullet · 25" barrel

COAL: 2.245" • Bullet length: 0.967" • Seat depth: 0.409" • Usable capacity: 29.4 / 35.5 gr H_2O

Powder	STEP 1 · 90%		STEP 2		STEP 3		STEP 4		STEP 5 · LIMIT			
	gr	fps	gr	fps	gr	fps	gr	fps	gr	fps	psi	Fill
Hodgdon CFE BLK	25.2	2,630	25.9	2,690	26.6	2,750	27.3	2,810	28.0	2,870	54,600	98%
Shooters World SBR-SOCOM	22.1	2,630	22.7	2,690	23.3	2,745	23.9	2,800	24.5	2,855	54,700	86%
Alliant Power Pro 1200-R	26.3	2,600	27.0	2,660	27.8	2,725	28.5	2,785	29.2	2,845	54,700	101%
Norma 200	25.6	2,590	26.3	2,650	27.0	2,710	27.7	2,770	28.4	2,830	53,900	105%
Shooters World AR Plus	26.8	2,565	27.6	2,630	28.3	2,690	29.1	2,755	29.8	2,815	54,600	102%
Ramshot X-Terminator	27.5	2,550	28.3	2,610	29.0	2,665	29.8	2,730	30.5	2,785	53,100	105%
Accurate LT-30	24.9	2,530	25.6	2,590	26.3	2,645	27.0	2,705	27.7	2,765	54,500	95%
Hodgdon H4198	23.7	2,540	24.4	2,600	25.0	2,655	25.6	2,705	26.3	2,765	54,500	102%
Alliant Power Pro 300-MP	20.2	2,550	20.8	2,605	21.3	2,655	21.8	2,705	22.4	2,760	54,700	84%
Shooters World The Patriot	26.7	2,505	27.4	2,560	28.2	2,625	28.9	2,680	29.7	2,745	52,200	105%
Alliant Reloder 7	23.9	2,505	24.6	2,565	25.3	2,625	25.9	2,675	26.6	2,735	54,800	96%
Hodgdon H335	27.7	2,490	28.5	2,550	29.3	2,615	30.0	2,670	30.8	2,735	54,800	103%
Accurate 2015	26.0	2,485	26.7	2,545	27.4	2,605	28.2	2,670	28.9	2,730	54,500	102%
Accurate LT-32	25.2	2,480	25.9	2,540	26.6	2,595	27.3	2,655	28.0	2,715	53,500	105%
IMR 4198	23.1	2,485	23.8	2,545	24.4	2,595	25.1	2,655	25.7	2,705	52,300	105%
Vihtavuori N120	21.9	2,475	22.5	2,530	23.1	2,585	23.7	2,635	24.3	2,690	54,900	96%
Accurate 2495	27.6	2,430	28.4	2,495	29.1	2,550	29.9	2,620	30.7	2,685	52,300	105%
Accurate 1680	22.8	2,460	23.4	2,515	24.1	2,575	24.7	2,625	25.3	2,675	54,700	88%
Shooters World Tactical Rifle	27.0	2,425	27.8	2,490	28.5	2,550	29.3	2,615	30.0	2,670	51,900	105%

110 gr Bullet · 25" barrel

COAL: 2.245" • Bullet length: 1.000" • Seat depth: 0.442" • Usable capacity: 29.1 / 35.5 gr H_2O

Powder	STEP 1 · 90%		STEP 2		STEP 3		STEP 4		STEP 5 · LIMIT			
	gr	fps	gr	fps	gr	fps	gr	fps	gr	fps	psi	Fill
Hodgdon CFE BLK	24.5	2,505	25.2	2,565	25.9	2,625	26.5	2,670	27.2	2,730	54,700	96%
Alliant Power Pro 1200-R	25.5	2,490	26.2	2,550	26.9	2,605	27.6	2,660	28.3	2,720	54,600	99%
Norma 200	24.8	2,485	25.5	2,540	26.2	2,600	26.9	2,655	27.6	2,715	54,600	103%
Shooters World AR Plus	26.2	2,470	26.9	2,525	27.6	2,580	28.4	2,645	29.1	2,700	55,000	101%
Shooters World SBR-SOCOM	21.2	2,485	21.8	2,540	22.4	2,595	23.0	2,645	23.6	2,700	54,600	83%
Accurate 2230	27.2	2,465	27.9	2,520	28.7	2,580	29.4	2,635	30.2	2,695	53,300	105%
Accurate 2460	27.5	2,460	28.3	2,520	29.0	2,575	29.8	2,635	30.5	2,690	52,100	105%
Hodgdon H322	25.9	2,445	26.6	2,505	27.4	2,570	28.1	2,625	28.8	2,685	53,400	105%
Reload Swiss RS40	25.9	2,450	26.6	2,510	27.4	2,570	28.1	2,630	28.8	2,685	53,300	105%
Ramshot X-Terminator	26.7	2,445	27.4	2,495	28.2	2,555	28.9	2,610	29.7	2,670	54,700	103%
Shooters World The Patriot	26.4	2,430	27.1	2,485	27.9	2,550	28.6	2,605	29.3	2,660	54,500	105%
Hodgdon H4198	23.0	2,420	23.6	2,475	24.3	2,530	24.9	2,585	25.5	2,635	54,500	100%
Accurate 2495	27.4	2,395	28.1	2,450	28.9	2,515	29.6	2,570	30.4	2,630	54,700	105%
Hodgdon H335	27.0	2,400	27.8	2,460	28.5	2,515	29.3	2,575	30.0	2,630	54,700	102%
Accurate LT-32	24.8	2,400	25.5	2,460	26.1	2,505	26.8	2,565	27.5	2,620	54,800	104%
IMR 3031	25.7	2,380	26.4	2,435	27.1	2,495	27.9	2,555	28.6	2,615	53,900	105%
Shooters World Tactical Rifle	26.7	2,375	27.4	2,430	28.2	2,495	28.9	2,550	29.7	2,615	54,300	105%
IMR 4198	22.8	2,400	23.4	2,450	24.1	2,510	24.7	2,560	25.3	2,610	54,800	104%
Alliant Reloder 7	23.1	2,385	23.8	2,445	24.4	2,495	25.1	2,550	25.7	2,600	54,700	94%
Accurate 1680	22.1	2,340	22.7	2,390	23.3	2,440	23.9	2,490	24.5	2,540	54,700	87%

130 gr Bullet · 25" barrel

COAL: 2.250" • Bullet length: 1.201" • Seat depth: 0.637" • Usable capacity: 26.7 / 35.5 gr H_2O

Powder	STEP 1 · 90%		STEP 2		STEP 3		STEP 4		STEP 5 · LIMIT			
	gr	fps	gr	fps	gr	fps	gr	fps	gr	fps	psi	Fill
Alliant Power Pro 1200-R	23.0	2,220	23.6	2,270	24.3	2,325	25.0	2,380	25.6	2,430	54,600	98%
Accurate 2460	25.1	2,215	25.8	2,265	26.5	2,320	27.2	2,370	27.9	2,425	54,600	105%
Hodgdon CFE BLK	22.2	2,220	22.8	2,270	23.4	2,320	24.1	2,375	24.7	2,425	54,900	95%
Norma 200	22.4	2,220	23.0	2,270	23.6	2,320	24.3	2,375	24.9	2,425	55,000	101%
Hodgdon H322	23.7	2,205	24.4	2,260	25.0	2,310	25.6	2,355	26.3	2,415	54,200	105%
Reload Swiss RS40	23.7	2,205	24.4	2,260	25.0	2,310	25.6	2,360	26.3	2,415	53,900	105%
Accurate 2230	24.7	2,205	25.4	2,255	26.0	2,305	26.7	2,355	27.4	2,410	54,800	104%
Shooters World AR Plus	23.8	2,205	24.4	2,250	25.1	2,305	25.8	2,360	26.4	2,410	54,500	100%
Vihtavuori N130	22.0	2,195	22.6	2,245	23.2	2,295	23.8	2,345	24.4	2,395	53,800	105%
Accurate 2495	24.9	2,160	25.6	2,215	26.3	2,270	27.0	2,325	27.7	2,380	54,900	104%
Alliant Reloder 10x	22.3	2,175	22.9	2,225	23.6	2,280	24.2	2,330	24.8	2,380	52,200	105%
Ramshot X-Terminator	24.0	2,165	24.7	2,220	25.4	2,270	26.0	2,315	26.7	2,370	54,900	101%
Shooters World The Patriot	23.9	2,165	24.5	2,215	25.2	2,265	25.9	2,320	26.5	2,370	54,500	103%
Hodgdon H335	24.6	2,155	25.3	2,210	26.0	2,265	26.6	2,310	27.3	2,365	54,700	101%
Shooters World Tactical Rifle	24.4	2,150	25.1	2,205	25.8	2,260	26.4	2,310	27.1	2,365	54,700	104%
Accurate LT-30	22.0	2,150	22.6	2,195	23.2	2,245	23.8	2,295	24.4	2,345	54,600	92%
Accurate LT-32	22.5	2,145	23.1	2,190	23.8	2,250	24.4	2,295	25.0	2,345	55,000	103%
Accurate 2015	23.0	2,130	23.6	2,180	24.3	2,235	25.0	2,290	25.6	2,340	54,500	100%
Hodgdon H4198	20.8	2,145	21.4	2,200	22.0	2,250	22.5	2,290	23.1	2,340	54,900	99%
Alliant Reloder 7	20.8	2,110	21.4	2,160	22.0	2,210	22.5	2,255	23.1	2,300	54,600	92%

28 Nosler

Nosler introduced the 28 Nosler in 2015 as the second member of its family of proprietary magnum cartridges. It followed the 26 Nosler. The 28 is essentially the 26 Nosler necked up to accept 7mm (.284-inch) bullets. Like the rest of the family it uses a beltless rebated-rim case derived from the .300 Remington Ultra Magnum. Its loaded length equals that of the .30-06 Springfield so that it fits standard-length actions. The cartridge has been standardized by SAAMI.

Nosler's factory load drives a 160-grain AccuBond bullet at about 3,300 fps. This gives it more velocity than the 7mm Remington Magnum with comparable bullets. It is used mainly for long-range hunting of elk, deer and other large game in open country. Its long heavy-for-caliber 7mm bullets also suit long-range target shooting. Rifles and ammunition are available from Nosler and several other manufacturers.

Cartridge specifications	
Bullet Diameter	**0.284" (7.21 mm)**
Max Case Length	**2.590" (65.79 mm)**
Case Trim Length	**2.580" (65.54 mm)**
Max COAL	**3.340" (84.84 mm)**
Primer Pocket	**Large Rifle**
Standard Twist	**1:9"**
Case Capacity	**99.3 gr H_2O**
Max Pressure	**65,000 psi (SAAMI)**

120 gr Bullet · 25" barrel

COAL: 3.250" • Bullet length: 1.052" • Seat depth: 0.393" • Usable capacity: 93.2 / 99.3 gr H_2O

Powder	STEP 1 · 90%		STEP 2		STEP 3		STEP 4		STEP 5 · LIMIT			
	gr	fps	gr	fps	gr	fps	gr	fps	gr	fps	psi	Fill
Alliant Reloder 26	77.9	3,370	80.1	3,450	82.3	3,535	84.4	3,615	86.6	3,700	64,900	93%
Ramshot Grand	81.5	3,330	83.8	3,415	86.0	3,500	88.3	3,585	90.5	3,670	65,000	99%
Hodgdon Retumbo	81.3	3,315	83.5	3,395	85.8	3,480	88.0	3,565	90.3	3,650	64,900	101%
Vihtavuori N570	81.6	3,285	83.9	3,375	86.2	3,465	88.4	3,550	90.7	3,640	64,800	100%
Accurate MagPro	80.3	3,290	82.5	3,375	84.8	3,465	87.0	3,545	89.2	3,635	65,000	98%
Alliant Reloder 23	73.6	3,330	75.6	3,400	77.7	3,480	79.8	3,560	81.8	3,635	64,800	95%
IMR 8133	83.2	3,275	85.5	3,365	87.8	3,450	90.1	3,540	92.4	3,630	65,000	103%
Alliant Reloder 25	79.0	3,290	81.2	3,375	83.4	3,455	85.6	3,540	87.8	3,625	64,900	103%
Alliant Reloder 22	74.4	3,300	76.5	3,380	78.6	3,460	80.6	3,535	82.7	3,620	65,000	94%
IMR 7828SSC	76.1	3,300	78.2	3,380	80.3	3,460	82.4	3,540	84.5	3,620	64,900	94%
Reload Swiss RS76	81.5	3,285	83.8	3,370	86.0	3,445	88.3	3,530	90.6	3,615	64,900	98%
Hodgdon H1000	79.3	3,280	81.5	3,360	83.7	3,440	85.9	3,525	88.1	3,610	64,800	103%
Ramshot Magnum	81.4	3,240	83.7	3,320	85.9	3,405	88.2	3,490	90.4	3,575	64,800	97%
Vihtavuori N560	74.7	3,275	76.8	3,350	78.8	3,420	80.9	3,495	83.0	3,570	64,900	93%
Winchester Supreme 780	76.9	3,250	79.0	3,330	81.2	3,410	83.3	3,490	85.4	3,570	65,000	92%
Vihtavuori N565	77.3	3,240	79.5	3,325	81.6	3,400	83.8	3,485	85.9	3,565	64,900	97%
IMR 7977	78.3	3,215	80.5	3,295	82.7	3,380	84.8	3,460	87.0	3,545	64,900	101%
Hodgdon H4831	73.5	3,220	75.5	3,295	77.6	3,375	79.7	3,455	81.7	3,530	64,800	94%
Vihtavuori N160	70.0	3,205	72.0	3,275	73.9	3,345	75.8	3,415	77.8	3,490	65,000	91%
Vihtavuori N165	73.7	3,195	75.8	3,265	77.8	3,340	79.9	3,415	81.9	3,490	65,000	94%

130 gr Bullet · 25" barrel

COAL: 3.225" • Bullet length: 1.100" • Seat depth: 0.466" • Usable capacity: 92.2 / 99.3 gr H_2O

Powder	STEP 1 · 90%		STEP 2		STEP 3		STEP 4		STEP 5 · LIMIT			
	gr	fps	gr	fps	gr	fps	gr	fps	gr	fps	psi	Fill
Alliant Reloder 26	76.0	3,260	78.1	3,340	80.2	3,415	82.3	3,495	84.4	3,575	64,800	92%
Ramshot Grand	79.7	3,230	81.9	3,310	84.2	3,390	86.4	3,475	88.6	3,560	64,800	98%
Hodgdon Retumbo	79.5	3,215	81.7	3,295	83.9	3,375	86.1	3,455	88.3	3,535	64,900	100%
Vihtavuori N570	79.5	3,205	81.7	3,285	83.9	3,370	86.1	3,450	88.3	3,535	64,900	99%
Accurate MagPro	78.7	3,205	80.9	3,285	83.1	3,365	85.2	3,445	87.4	3,530	65,000	97%
IMR 8133	81.5	3,190	83.8	3,275	86.0	3,355	88.3	3,445	90.5	3,530	64,800	102%
Alliant Reloder 25	77.3	3,195	79.5	3,275	81.6	3,355	83.8	3,435	85.9	3,515	64,900	102%
Winchester StaBALL HD	81.0	3,180	83.3	3,260	85.5	3,340	87.8	3,425	90.0	3,505	64,800	99%
Hodgdon H1000	77.5	3,180	79.7	3,260	81.8	3,340	83.9	3,415	86.1	3,500	64,800	101%
Reload Swiss RS76	79.7	3,180	81.9	3,260	84.2	3,340	86.4	3,420	88.6	3,500	64,900	97%
Alliant Reloder 19	71.6	3,190	73.6	3,265	75.6	3,340	77.6	3,415	79.6	3,495	64,800	92%
IMR 7828SSC	74.1	3,195	76.1	3,270	78.2	3,345	80.3	3,420	82.3	3,495	64,900	93%
Ramshot Magnum	79.7	3,155	81.9	3,230	84.1	3,310	86.3	3,395	88.5	3,475	64,900	96%
Winchester Supreme 780	74.9	3,150	77.0	3,225	79.1	3,305	81.1	3,380	83.2	3,455	64,800	91%
IMR 4831	69.1	3,155	71.0	3,225	72.9	3,295	74.9	3,375	76.8	3,445	64,900	89%
Vihtavuori N565	74.8	3,140	76.9	3,215	78.9	3,290	81.0	3,365	83.1	3,440	64,900	95%
IMR 7977	76.6	3,120	78.7	3,200	80.8	3,275	83.0	3,355	85.1	3,435	64,800	100%
Vihtavuori N560	72.4	3,150	74.4	3,220	76.4	3,290	78.4	3,360	80.4	3,430	64,900	91%
IMR 7828	72.7	3,110	74.7	3,185	76.8	3,260	78.8	3,335	80.8	3,410	64,900	88%
Hodgdon H50BMG	85.5	3,045	87.9	3,125	90.3	3,210	92.6	3,290	95.0	3,375	63,200	105%

140 gr Bullet · 25" barrel

COAL: 3.225" • Bullet length: 1.172" • Seat depth: 0.537" • Usable capacity: 91.1 / 99.3 gr H_2O

Powder	STEP 1 · 90%		STEP 2		STEP 3		STEP 4		STEP 5 · LIMIT			
	gr	fps	gr	fps	gr	fps	gr	fps	gr	fps	psi	Fill
Alliant Reloder 26	74.0	3,155	76.0	3,225	78.1	3,305	80.2	3,380	82.2	3,455	64,900	91%
Ramshot Grand	78.0	3,130	80.2	3,210	82.3	3,285	84.5	3,365	86.7	3,445	64,800	97%
Accurate MagPro	77.0	3,115	79.1	3,190	81.3	3,270	83.4	3,345	85.5	3,425	64,900	96%
IMR 8133	79.7	3,100	81.9	3,180	84.2	3,265	86.4	3,345	88.6	3,425	64,800	101%
Vihtavuori N570	77.1	3,110	79.3	3,190	81.4	3,265	83.5	3,340	85.7	3,425	64,800	97%
Hodgdon Retumbo	77.6	3,115	79.8	3,190	81.9	3,265	84.0	3,340	86.2	3,420	64,900	98%
Alliant Reloder 25	75.6	3,105	77.7	3,180	79.8	3,255	81.9	3,330	84.0	3,410	65,000	101%
Winchester StaBALL HD	79.2	3,085	81.4	3,165	83.6	3,240	85.8	3,320	88.0	3,395	65,000	98%
Hodgdon H1000	75.7	3,085	77.8	3,160	79.9	3,235	82.0	3,315	84.1	3,390	64,900	100%
IMR 7828SSC	72.1	3,090	74.1	3,160	76.1	3,235	78.1	3,305	80.1	3,380	65,000	91%
Alliant Reloder 22	70.7	3,090	72.7	3,165	74.6	3,230	76.5	3,300	78.5	3,375	65,000	92%
Alliant Reloder 23	69.8	3,095	71.7	3,165	73.7	3,235	75.6	3,305	77.5	3,375	65,000	92%
Ramshot Magnum	77.9	3,065	80.1	3,145	82.2	3,220	84.3	3,295	86.5	3,375	64,800	95%
Vihtavuori N568	78.3	3,040	80.5	3,120	82.7	3,205	84.8	3,285	87.0	3,370	65,000	99%
IMR 4831	67.5	3,050	69.4	3,120	71.3	3,195	73.1	3,260	75.0	3,330	64,900	88%
IMR 7977	74.9	3,030	77.0	3,105	79.1	3,180	81.1	3,255	83.2	3,330	64,900	99%
Vihtavuori N565	72.3	3,040	74.3	3,110	76.3	3,180	78.3	3,250	80.3	3,320	64,900	93%
Accurate 3100	69.4	3,015	71.3	3,080	73.3	3,155	75.2	3,225	77.1	3,295	64,800	92%
IMR 7828	70.7	3,010	72.7	3,085	74.7	3,155	76.6	3,225	78.6	3,295	64,900	87%
Hodgdon H4831	69.8	3,015	71.7	3,080	73.7	3,155	75.6	3,225	77.5	3,290	65,000	91%

150 gr Bullet · 25" barrel

COAL: 3.300" • Bullet length: 1.253" • Seat depth: 0.543" • Usable capacity: 91.1 / 99.3 gr H_2O

Powder	STEP 1 · 90%		STEP 2		STEP 3		STEP 4		STEP 5 · LIMIT			
	gr	fps	gr	fps	gr	fps	gr	fps	gr	fps	psi	Fill
Ramshot Grand	77.0	3,050	79.2	3,125	81.3	3,200	83.4	3,275	85.6	3,355	64,800	96%
Alliant Reloder 26	72.5	3,055	74.5	3,125	76.5	3,195	78.6	3,270	80.6	3,345	64,800	89%
IMR 8133	78.8	3,035	81.0	3,110	83.2	3,185	85.4	3,265	87.6	3,345	65,000	100%
Ramshot LRT	84.2	3,020	86.5	3,095	88.9	3,180	91.3	3,265	93.6	3,345	65,000	105%
Accurate MagPro	76.0	3,035	78.1	3,110	80.2	3,185	82.3	3,260	84.4	3,335	64,800	95%
Hodgdon Retumbo	76.4	3,030	78.5	3,100	80.7	3,175	82.8	3,250	84.9	3,325	64,900	97%
Vihtavuori N570	75.4	3,025	77.5	3,100	79.6	3,170	81.7	3,245	83.8	3,320	64,900	95%
Alliant Reloder 25	74.5	3,020	76.6	3,095	78.7	3,170	80.7	3,240	82.8	3,315	64,900	99%
Vihtavuori N568	77.2	2,980	79.3	3,060	81.5	3,140	83.7	3,220	85.8	3,300	64,900	97%
Winchester StaBALL HD	78.0	3,005	80.2	3,075	82.3	3,150	84.5	3,225	86.7	3,300	65,000	97%
Hodgdon H1000	74.5	3,005	76.6	3,075	78.7	3,150	80.7	3,220	82.8	3,295	64,900	99%
Ramshot Magnum	76.9	2,995	79.0	3,070	81.2	3,145	83.3	3,220	85.4	3,295	65,000	94%
Reload Swiss RS76	76.8	2,995	78.9	3,065	81.0	3,135	83.2	3,210	85.3	3,285	65,000	94%
IMR 7828SSC	70.7	2,995	72.7	3,065	74.7	3,135	76.6	3,200	78.6	3,275	64,900	90%
Alliant Reloder 22	69.3	2,995	71.2	3,060	73.2	3,130	75.1	3,200	77.0	3,265	64,900	90%
Alliant Reloder 23	68.3	2,990	70.2	3,060	72.1	3,125	74.0	3,190	75.9	3,260	64,900	90%
IMR 7977	73.8	2,950	75.8	3,020	77.9	3,095	80.0	3,170	82.0	3,240	64,800	98%
Hodgdon H50BMG	83.3	2,920	85.6	2,995	87.9	3,075	90.3	3,155	92.6	3,235	64,900	104%
Vihtavuori N565	70.4	2,940	72.4	3,010	74.3	3,075	76.3	3,145	78.2	3,210	64,800	90%
Accurate 3100	68.1	2,925	70.0	2,990	71.9	3,060	73.8	3,125	75.7	3,195	64,800	90%

160 gr Bullet · 25" barrel

COAL: 3.200" • Bullet length: 1.370" • Seat depth: 0.760" • Usable capacity: 88.2 / 99.3 gr H_2O

Powder	STEP 1 · 90%		STEP 2		STEP 3		STEP 4		STEP 5 · LIMIT			
	gr	fps	gr	fps	gr	fps	gr	fps	gr	fps	psi	Fill
Ramshot Grand	74.6	2,960	76.7	3,030	78.8	3,105	80.8	3,175	82.9	3,250	64,800	96%
Ramshot LRT	81.6	2,935	83.9	3,010	86.2	3,090	88.4	3,165	90.7	3,250	65,000	105%
IMR 8133	76.3	2,945	78.4	3,020	80.5	3,095	82.7	3,170	84.8	3,245	65,000	100%
Accurate MagPro	73.6	2,950	75.6	3,020	77.7	3,095	79.8	3,170	81.8	3,240	65,000	95%
Alliant Reloder 26	70.0	2,960	72.0	3,030	73.9	3,095	75.8	3,165	77.8	3,235	64,800	89%
Hodgdon Retumbo	73.9	2,935	76.0	3,005	78.0	3,075	80.0	3,145	82.1	3,220	64,800	97%
Vihtavuori N570	72.7	2,935	74.7	3,005	76.8	3,080	78.8	3,150	80.8	3,220	65,000	94%
Alliant Reloder 25	72.1	2,930	74.1	3,000	76.1	3,070	78.1	3,140	80.1	3,215	64,800	99%
Vihtavuori N568	74.8	2,915	76.9	2,990	78.9	3,060	81.0	3,140	83.1	3,215	65,000	97%
Winchester StaBALL HD	75.5	2,915	77.6	2,985	79.7	3,055	81.8	3,125	83.9	3,200	64,900	97%
Ramshot Magnum	74.3	2,905	76.4	2,980	78.4	3,050	80.5	3,120	82.6	3,195	64,900	94%
Hodgdon H1000	72.0	2,910	74.0	2,980	76.0	3,050	78.0	3,120	80.0	3,190	64,900	98%
Reload Swiss RS76	74.3	2,900	76.3	2,970	78.4	3,040	80.5	3,110	82.5	3,180	64,900	94%
Alliant Reloder 23	65.9	2,890	67.7	2,955	69.6	3,020	71.4	3,085	73.2	3,145	64,900	90%
IMR 7977	71.5	2,865	73.5	2,935	75.5	3,005	77.4	3,070	79.4	3,145	65,000	98%
Winchester Supreme 780	69.1	2,870	71.0	2,940	72.9	3,005	74.9	3,075	76.8	3,145	64,900	88%
Hodgdon H50BMG	80.7	2,840	83.0	2,915	85.2	2,990	87.5	3,065	89.7	3,140	65,000	104%
IMR 4831	64.4	2,875	66.2	2,940	68.0	3,005	69.7	3,065	71.5	3,130	64,900	87%
Accurate 4350	62.7	2,850	64.5	2,915	66.2	2,975	68.0	3,040	69.7	3,100	64,900	83%
IMR 7828	67.0	2,835	68.8	2,900	70.7	2,965	72.6	3,030	74.4	3,095	65,000	85%

168 gr Bullet · 25" barrel

COAL: 3.294" • Bullet length: 1.519" • Seat depth: 0.815" • Usable capacity: 87.4 / 99.3 gr H_2O

Powder	STEP 1 · 90%		STEP 2		STEP 3		STEP 4		STEP 5 · LIMIT			
	gr	fps	gr	fps	gr	fps	gr	fps	gr	fps	psi	Fill
Ramshot Grand	73.4	2,895	75.5	2,965	77.5	3,035	79.5	3,105	81.6	3,180	64,900	95%
Ramshot LRT	80.4	2,880	82.6	2,950	84.8	3,025	87.1	3,105	89.3	3,180	64,900	104%
IMR 8133	75.1	2,885	77.2	2,955	79.3	3,030	81.3	3,100	83.4	3,175	64,800	99%
Accurate MagPro	72.5	2,890	74.5	2,960	76.5	3,030	78.5	3,100	80.5	3,170	64,900	94%
Alliant Reloder 26	68.7	2,890	70.6	2,955	72.5	3,020	74.4	3,090	76.3	3,155	64,900	88%
Vihtavuori N568	73.5	2,860	75.5	2,930	77.6	3,005	79.7	3,080	81.7	3,155	64,900	97%
Hodgdon Retumbo	72.6	2,870	74.6	2,935	76.7	3,005	78.7	3,075	80.7	3,145	64,900	96%
Alliant Reloder 25	70.9	2,865	72.9	2,935	74.8	3,000	76.8	3,070	78.8	3,140	64,900	98%
Vihtavuori N570	71.1	2,870	73.1	2,935	75.0	3,000	77.0	3,070	79.0	3,140	65,000	93%
Ramshot Magnum	73.2	2,850	75.2	2,920	77.3	2,990	79.3	3,060	81.3	3,130	65,000	93%
Winchester StaBALL HD	74.3	2,850	76.3	2,915	78.4	2,985	80.5	3,060	82.5	3,125	65,000	96%
Hodgdon H1000	70.7	2,845	72.7	2,910	74.7	2,980	76.6	3,045	78.6	3,115	64,900	98%
Reload Swiss RS76	73.0	2,830	75.0	2,900	77.0	2,965	79.1	3,035	81.1	3,100	64,900	94%
Hodgdon H50BMG	79.4	2,785	81.6	2,855	83.8	2,925	86.0	3,000	88.2	3,075	64,900	103%
IMR 7977	70.2	2,800	72.2	2,870	74.1	2,935	76.0	3,000	78.0	3,070	64,800	97%
Alliant Reloder 23	64.5	2,810	66.3	2,875	68.1	2,935	69.9	3,000	71.7	3,060	65,000	89%
IMR 4831	63.3	2,805	65.0	2,865	66.8	2,930	68.5	2,995	70.3	3,060	65,000	86%
IMR 4955	64.5	2,805	66.3	2,870	68.1	2,935	69.9	2,995	71.7	3,060	64,800	83%
Vihtavuori N565	66.2	2,780	68.0	2,845	69.9	2,905	71.8	2,970	73.6	3,035	65,000	88%
Vihtavuori 24N41	74.1	2,740	76.1	2,810	78.2	2,880	80.3	2,950	82.3	3,020	64,800	96%

175 gr Bullet · 25" barrel

COAL: 3.300" • Bullet length: 1.456" • Seat depth: 0.746" • Usable capacity: 88.0 / 99.3 gr H_2O

Powder	STEP 1 · 90%		STEP 2		STEP 3		STEP 4		STEP 5 · LIMIT			
	gr	fps	gr	fps	gr	fps	gr	fps	gr	fps	psi	Fill
IMR 8133	74.8	2,840	76.9	2,910	78.9	2,980	81.0	3,050	83.1	3,125	65,000	98%
Ramshot LRT	79.9	2,830	82.1	2,900	84.3	2,975	86.6	3,050	88.8	3,125	64,900	103%
Ramshot Grand	73.1	2,845	75.1	2,910	77.2	2,985	79.2	3,050	81.2	3,120	65,000	94%
Accurate MagPro	72.1	2,840	74.1	2,910	76.1	2,980	78.1	3,045	80.1	3,115	65,000	93%
Vihtavuori N568	73.1	2,820	75.1	2,890	77.2	2,965	79.2	3,035	81.2	3,105	64,900	95%
Alliant Reloder 26	68.0	2,825	69.9	2,890	71.8	2,955	73.6	3,020	75.5	3,085	64,800	86%
Alliant Reloder 25	70.5	2,815	72.5	2,885	74.4	2,950	76.3	3,015	78.3	3,080	64,900	97%
Hodgdon Retumbo	72.0	2,810	74.0	2,875	76.0	2,945	78.0	3,010	80.0	3,080	64,900	95%
Ramshot Magnum	72.6	2,800	74.6	2,865	76.7	2,935	78.7	3,005	80.7	3,075	64,800	92%
Vihtavuori N570	70.0	2,805	72.0	2,870	73.9	2,935	75.8	3,000	77.8	3,065	64,900	91%
Winchester StaBALL HD	73.6	2,790	75.6	2,855	77.7	2,925	79.8	2,995	81.8	3,060	64,900	95%
Hodgdon H1000	70.2	2,790	72.2	2,855	74.1	2,920	76.0	2,985	78.0	3,055	64,900	96%
Reload Swiss RS76	72.5	2,775	74.5	2,840	76.5	2,905	78.5	2,970	80.5	3,040	64,900	92%
Alliant Reloder 33	76.6	2,755	78.7	2,820	80.8	2,890	83.0	2,960	85.1	3,030	61,500	105%
Reload Swiss RS62	63.5	2,775	65.3	2,840	67.0	2,900	68.8	2,965	70.5	3,025	65,000	83%
Hodgdon H50BMG	78.9	2,735	81.1	2,805	83.3	2,875	85.5	2,945	87.7	3,020	64,900	101%
IMR 7828SSC	66.2	2,765	68.0	2,830	69.9	2,895	71.8	2,955	73.6	3,020	64,900	87%
IMR 7977	69.8	2,750	71.7	2,815	73.7	2,880	75.6	2,945	77.5	3,010	64,900	96%
Vihtavuori 24N41	73.6	2,700	75.6	2,765	77.7	2,835	79.8	2,905	81.8	2,975	65,000	95%
Norma MRP	64.6	2,715	66.4	2,775	68.2	2,835	70.0	2,900	71.8	2,960	64,900	85%

183 gr Bullet · 25" barrel

COAL: 3.340" • Bullet length: 1.585" • Seat depth: 0.835" • Usable capacity: 86.8 / 99.3 gr H_2O

Powder	STEP 1 · 90%		STEP 2		STEP 3		STEP 4		STEP 5 · LIMIT			
	gr	fps	gr	fps	gr	fps	gr	fps	gr	fps	psi	Fill
Ramshot LRT	78.5	2,775	80.7	2,845	82.8	2,915	85.0	2,985	87.2	3,060	64,900	102%
Accurate MagPro	70.7	2,780	72.7	2,845	74.7	2,915	76.6	2,980	78.6	3,050	64,900	92%
IMR 8133	73.4	2,780	75.4	2,845	77.5	2,915	79.5	2,985	81.5	3,050	64,800	98%
Ramshot Grand	71.7	2,780	73.7	2,845	75.7	2,915	77.7	2,980	79.7	3,050	65,000	94%
Vihtavuori N568	71.6	2,765	73.6	2,835	75.6	2,905	77.6	2,975	79.6	3,045	64,800	95%
Alliant Reloder 25	69.1	2,750	71.0	2,815	72.9	2,880	74.9	2,945	76.8	3,010	64,800	97%
Alliant Reloder 26	66.5	2,755	68.3	2,815	70.2	2,880	72.1	2,945	73.9	3,010	64,900	85%
Hodgdon Retumbo	70.6	2,745	72.5	2,810	74.5	2,875	76.5	2,940	78.4	3,005	64,900	94%
Ramshot Magnum	71.3	2,745	73.3	2,810	75.3	2,875	77.2	2,940	79.2	3,005	64,900	92%
Vihtavuori N570	68.3	2,740	70.2	2,800	72.1	2,865	74.0	2,925	75.9	2,990	64,800	90%
Winchester StaBALL HD	72.2	2,730	74.2	2,795	76.2	2,860	78.2	2,925	80.2	2,990	64,900	94%
Alliant Reloder 33	75.6	2,710	77.7	2,775	79.8	2,845	81.9	2,910	84.0	2,980	62,600	105%
Hodgdon H1000	68.8	2,725	70.7	2,790	72.6	2,850	74.5	2,915	76.4	2,980	64,900	95%
Alliant Reloder 19	63.6	2,725	65.4	2,790	67.2	2,850	68.9	2,910	70.7	2,975	65,000	86%
Reload Swiss RS76	71.0	2,710	73.0	2,770	75.0	2,835	76.9	2,900	78.9	2,965	64,900	92%
Hodgdon H50BMG	77.4	2,680	79.6	2,745	81.7	2,815	83.8	2,880	86.0	2,950	64,800	101%
IMR 7828SSC	64.8	2,700	66.6	2,760	68.4	2,820	70.2	2,880	72.0	2,945	64,900	86%
IMR 7977	68.4	2,685	70.3	2,750	72.2	2,810	74.1	2,875	76.0	2,940	64,900	95%
Vihtavuori 24N41	72.1	2,645	74.1	2,710	76.1	2,775	78.1	2,840	80.1	2,910	64,800	94%
Norma URP	57.9	2,670	59.5	2,730	61.1	2,785	62.7	2,845	64.3	2,900	64,900	81%

197 gr Bullet · 25" barrel

COAL: 3.340" • Bullet length: 1.660" • Seat depth: 0.910" • Usable capacity: 85.9 / 99.3 gr H_2O

Powder	STEP 1 · 90%		STEP 2		STEP 3		STEP 4		STEP 5 · LIMIT			
	gr	fps	gr	fps	gr	fps	gr	fps	gr	fps	psi	Fill
Ramshot LRT	76.7	2,680	78.8	2,750	81.0	2,820	83.1	2,885	85.2	2,955	65,000	101%
Hodgdon US 869	78.8	2,660	81.0	2,730	83.2	2,800	85.4	2,875	87.6	2,950	62,200	105%
IMR 8133	71.7	2,685	73.7	2,750	75.7	2,815	77.7	2,880	79.7	2,950	65,000	96%
Vihtavuori N568	69.8	2,680	71.8	2,750	73.7	2,815	75.6	2,880	77.6	2,945	64,800	93%
Accurate MagPro	69.0	2,680	70.9	2,745	72.8	2,810	74.8	2,875	76.7	2,940	64,800	91%
Ramshot Grand	70.0	2,680	72.0	2,745	73.9	2,810	75.8	2,870	77.8	2,935	65,000	92%
Alliant Reloder 33	74.7	2,645	76.8	2,710	78.8	2,775	80.9	2,840	83.0	2,910	64,800	105%
Alliant Reloder 25	67.4	2,650	69.3	2,715	71.2	2,775	73.0	2,835	74.9	2,900	64,900	95%
Ramshot Magnum	69.5	2,650	71.4	2,710	73.3	2,770	75.3	2,840	77.2	2,900	64,900	90%
Alliant Reloder 26	64.5	2,645	66.3	2,705	68.1	2,765	69.9	2,825	71.7	2,885	65,000	84%
Hodgdon Retumbo	68.6	2,640	70.5	2,700	72.4	2,760	74.3	2,825	76.2	2,885	65,000	92%
Winchester StaBALL HD	70.2	2,625	72.2	2,685	74.1	2,750	76.0	2,810	78.0	2,875	64,800	92%
Vihtavuori N570	66.0	2,630	67.8	2,690	69.7	2,750	71.5	2,810	73.3	2,870	64,900	88%
Hodgdon H1000	66.9	2,620	68.8	2,685	70.6	2,740	72.5	2,805	74.3	2,865	65,000	94%
Hodgdon H50BMG	75.5	2,585	77.6	2,650	79.7	2,715	81.8	2,780	83.9	2,850	64,900	99%
Reload Swiss RS76	69.1	2,605	71.0	2,660	72.9	2,720	74.9	2,785	76.8	2,845	64,800	90%
IMR 7977	66.6	2,585	68.4	2,645	70.3	2,705	72.2	2,770	74.0	2,830	64,800	93%
Reload Swiss RS62	60.4	2,600	62.1	2,655	63.8	2,715	65.4	2,770	67.1	2,830	64,900	81%
IMR 7828SSC	62.9	2,595	64.7	2,650	66.4	2,710	68.2	2,770	69.9	2,825	64,900	85%
Vihtavuori 24N41	70.2	2,560	72.2	2,625	74.1	2,685	76.0	2,745	78.0	2,810	64,800	92%

.280 Ackley Improved

The .280 Ackley Improved is gunsmith P.O. Ackley's improved version of the .280 Remington. As with his other improved designs the case walls are pushed out to nearly parallel. The shoulder is steepened to 40 degrees in this case. Both changes increase powder capacity. For decades it was a wildcat made by fireforming .280 Remington cases. Nosler then standardized the cartridge. By 2008 SAAMI had accepted it under the name .280 Ackley Improved 40°.

With similar bullets the 7mm Remington Magnum has been reported to hold an advantage of only about 50 fps over the .280 Ackley Improved. Such comparisons depend heavily on barrel length. The .280 Ackley Improved works in standard-length actions. It typically holds one more round in the magazine than a belted magnum and produces less recoil. Several companies chamber rifles for it. Factory ammunition is available. The cartridge is used mainly for deer, elk and other big game.

Cartridge specifications	
Bullet Diameter	**0.284" (7.21 mm)**
Max Case Length	**2.525" (64.14 mm)**
Case Trim Length	**2.515" (63.88 mm)**
Max COAL	**3.330" (84.58 mm)**
Primer Pocket	**Large Rifle**
Standard Twist	**1:9"**
Case Capacity	**71.7 gr H_2O**
Max Pressure	**65,000 psi (SAAMI)**

120 gr Bullet · 25" barrel

COAL: 3.250" • Bullet length: 1.097" • Seat depth: 0.372" • Usable capacity: 66.0 / 71.7 gr H_2O

Powder	STEP 1 · 90%		STEP 2		STEP 3		STEP 4		STEP 5 · LIMIT			
	gr	fps	gr	fps	gr	fps	gr	fps	gr	fps	psi	Fill
Hodgdon SUPERFORMANCE	59.8	3,175	61.5	3,255	63.1	3,330	64.8	3,415	66.4	3,495	64,900	98%
Winchester StaBALL 6.5	57.5	3,185	59.1	3,260	60.7	3,335	62.3	3,410	63.9	3,490	64,800	98%
Alliant Reloder 26	62.1	3,120	63.8	3,200	65.5	3,280	67.3	3,370	69.0	3,450	64,400	105%
IMR 4955	59.1	3,105	60.8	3,185	62.4	3,260	64.0	3,340	65.7	3,425	64,900	100%
Ramshot Hunter	57.9	3,125	59.5	3,200	61.1	3,275	62.7	3,350	64.3	3,425	64,800	103%
Vihtavuori N555	57.8	3,120	59.4	3,195	61.0	3,270	62.6	3,350	64.2	3,425	64,800	104%
Accurate 2495	50.3	3,140	51.7	3,210	53.1	3,280	54.5	3,345	55.9	3,415	64,700	85%
Alliant Reloder 16	54.4	3,100	55.9	3,170	57.4	3,240	58.9	3,310	60.4	3,380	64,900	101%
Reload Swiss RS70	59.1	3,055	60.8	3,135	62.4	3,210	64.0	3,290	65.7	3,370	65,000	100%
Alliant Power Pro 2000-MR	52.4	3,080	53.9	3,150	55.3	3,220	56.8	3,290	58.2	3,355	64,900	93%
Norma MRP	59.2	3,040	60.9	3,120	62.5	3,195	64.2	3,275	65.8	3,355	64,800	104%
IMR 4350	55.0	3,060	56.5	3,130	58.0	3,200	59.6	3,275	61.1	3,350	64,700	99%
Vihtavuori N160	56.7	3,045	58.3	3,120	59.9	3,195	61.4	3,265	63.0	3,340	64,900	104%
Accurate 2700	53.6	3,045	55.1	3,120	56.6	3,190	58.1	3,260	59.6	3,330	64,800	92%
Hodgdon H380	52.7	3,055	54.2	3,125	55.7	3,195	57.1	3,260	58.6	3,330	64,800	94%
Alliant Reloder 19	57.7	3,015	59.3	3,090	60.9	3,170	62.5	3,245	64.1	3,325	65,000	103%
Alliant Reloder 22	58.4	3,010	60.0	3,085	61.7	3,170	63.3	3,245	64.9	3,325	64,800	104%
IMR 4007 SSC	53.6	3,020	55.1	3,090	56.6	3,165	58.1	3,235	59.6	3,310	64,800	97%
IMR 4831	55.5	2,980	57.0	3,055	58.6	3,130	60.2	3,210	61.7	3,285	65,000	100%
Hodgdon H4350	53.3	3,000	54.8	3,070	56.3	3,140	57.7	3,210	59.2	3,280	64,900	90%

140 gr Bullet · 25" barrel

COAL: 3.280" • Bullet length: 1.220" • Seat depth: 0.465" • Usable capacity: 64.6 / 71.7 gr H_2O

Powder	STEP 1 · 90%		STEP 2		STEP 3		STEP 4		STEP 5 · LIMIT			
	gr	fps	gr	fps	gr	fps	gr	fps	gr	fps	psi	Fill
Hodgdon SUPERFORMANCE	57.1	2,980	58.7	3,055	60.3	3,130	61.8	3,195	63.4	3,270	64,800	96%
Alliant Reloder 26	59.6	2,960	61.3	3,040	62.9	3,110	64.5	3,185	66.2	3,265	64,900	103%
Winchester StaBALL 6.5	54.7	2,960	56.2	3,025	57.8	3,100	59.3	3,165	60.8	3,235	65,000	95%
IMR 4955	56.6	2,930	58.2	3,005	59.8	3,080	61.3	3,150	62.9	3,225	64,900	98%
Alliant Reloder 23	56.2	2,925	57.8	2,995	59.3	3,065	60.9	3,140	62.4	3,205	63,000	105%
Ramshot Hunter	55.3	2,925	56.8	2,990	58.3	3,060	59.9	3,135	61.4	3,205	64,900	101%
Vihtavuori N560	58.3	2,920	59.9	2,990	61.5	3,055	63.2	3,130	64.8	3,200	62,400	105%
Reload Swiss RS62	55.0	2,900	56.5	2,970	58.0	3,040	59.6	3,115	61.1	3,185	64,900	98%
Norma URP	52.4	2,905	53.9	2,975	55.3	3,040	56.8	3,110	58.2	3,180	64,900	99%
Reload Swiss RS70	56.5	2,885	58.1	2,960	59.6	3,025	61.2	3,100	62.8	3,175	64,900	98%
Norma MRP	56.6	2,870	58.2	2,940	59.8	3,015	61.3	3,080	62.9	3,155	65,000	101%
Hodgdon H4831SC	56.3	2,860	57.9	2,930	59.5	3,005	61.0	3,070	62.6	3,145	64,900	98%
IMR 7828	57.8	2,855	59.4	2,930	61.0	3,000	62.6	3,075	64.2	3,145	64,800	100%
Alliant Reloder 19	55.2	2,855	56.7	2,925	58.3	3,000	59.8	3,070	61.3	3,140	64,900	101%
Alliant Reloder 22	55.8	2,850	57.3	2,920	58.9	2,990	60.5	3,065	62.0	3,135	64,900	102%
IMR 4350	52.0	2,850	53.5	2,920	54.9	2,980	56.3	3,045	57.8	3,115	64,800	96%
IMR 4831	53.2	2,820	54.7	2,890	56.2	2,960	57.6	3,025	59.1	3,095	65,000	98%
IMR 7828SSC	55.8	2,800	57.3	2,870	58.9	2,940	60.5	3,010	62.0	3,080	64,800	100%
Hodgdon H4831	55.0	2,785	56.5	2,850	58.0	2,915	59.6	2,990	61.1	3,060	64,900	102%
Hodgdon H4350	50.3	2,795	51.7	2,860	53.1	2,925	54.5	2,990	55.9	3,050	64,900	87%

150 gr Bullet · 25" barrel

COAL: 3.230" • Bullet length: 1.333" • Seat depth: 0.628" • Usable capacity: 62.1 / 71.7 gr H_2O

Powder	STEP 1 · 90%		STEP 2		STEP 3		STEP 4		STEP 5 · LIMIT			
	gr	fps	gr	fps	gr	fps	gr	fps	gr	fps	psi	Fill
Accurate 4350	55.2	2,965	56.7	3,030	58.3	3,105	59.8	3,175	61.3	3,250	64,700	103%
Hodgdon SUPERFORMANCE	54.9	2,870	56.4	2,940	58.0	3,015	59.5	3,080	61.0	3,155	65,000	96%
Alliant Reloder 26	57.2	2,855	58.8	2,925	60.4	3,000	62.0	3,075	63.6	3,145	64,900	103%
IMR 4955	54.4	2,825	55.9	2,895	57.4	2,965	58.9	3,035	60.4	3,105	64,800	98%
Winchester StaBALL 6.5	52.5	2,840	54.0	2,905	55.4	2,970	56.8	3,030	58.3	3,100	64,800	95%
Alliant Reloder 23	54.0	2,815	55.5	2,885	57.0	2,950	58.5	3,020	60.0	3,090	63,200	105%
Vihtavuori N560	56.1	2,820	57.6	2,880	59.2	2,950	60.8	3,020	62.3	3,085	63,100	105%
Ramshot Hunter	53.1	2,810	54.6	2,880	56.0	2,940	57.5	3,010	59.0	3,080	64,900	101%
Norma URP	50.2	2,795	51.6	2,860	53.0	2,925	54.4	2,995	55.8	3,060	64,900	99%
Reload Swiss RS60	50.0	2,780	51.4	2,845	52.8	2,910	54.2	2,980	55.6	3,045	64,800	92%
Norma MRP	54.3	2,760	55.8	2,830	57.3	2,895	58.8	2,965	60.3	3,030	64,700	101%
Alliant Reloder 19	53.0	2,755	54.5	2,820	56.0	2,890	57.4	2,955	58.9	3,025	64,900	101%
Hodgdon H4831SC	54.1	2,755	55.6	2,820	57.1	2,890	58.6	2,960	60.1	3,025	64,800	97%
Alliant Power Pro 4000-MR	52.5	2,755	54.0	2,825	55.4	2,885	56.8	2,950	58.3	3,020	64,900	96%
Alliant Reloder 22	53.6	2,750	55.1	2,820	56.5	2,880	58.0	2,950	59.5	3,020	64,800	102%
IMR 4350	49.9	2,740	51.3	2,805	52.6	2,860	54.0	2,925	55.4	2,990	65,000	96%
Alliant Reloder 16	49.0	2,745	50.4	2,810	51.7	2,865	53.0	2,925	54.4	2,985	64,900	97%
IMR 4831	51.1	2,715	52.5	2,780	54.0	2,850	55.4	2,915	56.8	2,980	64,900	98%
IMR 7828SSC	53.6	2,705	55.1	2,770	56.5	2,835	58.0	2,900	59.5	2,970	65,000	100%
Hodgdon H4350	48.2	2,685	49.5	2,745	50.9	2,810	52.2	2,870	53.5	2,930	65,000	87%

162 gr Bullet · 25" barrel

COAL: 3.300" • Bullet length: 1.411" • Seat depth: 0.636" • Usable capacity: 62.0 / 71.7 gr H_2O

Powder	STEP 1 · 90%		STEP 2		STEP 3		STEP 4		STEP 5 · LIMIT			
	gr	fps	gr	fps	gr	fps	gr	fps	gr	fps	psi	Fill
Accurate 4350	54.1	2,860	55.6	2,925	57.1	2,995	58.6	3,060	60.1	3,130	64,700	101%
Alliant Reloder 26	56.3	2,780	57.8	2,845	59.4	2,915	61.0	2,985	62.5	3,055	65,000	101%
Hodgdon SUPERFORMANCE	53.8	2,775	55.3	2,845	56.8	2,910	58.3	2,975	59.8	3,045	64,800	94%
Alliant Reloder 23	53.5	2,745	55.0	2,815	56.5	2,880	57.9	2,940	59.4	3,010	64,800	104%
IMR 4955	53.5	2,740	55.0	2,810	56.5	2,875	57.9	2,940	59.4	3,010	64,800	96%
Vihtavuori N560	55.1	2,735	56.6	2,795	58.2	2,865	59.7	2,925	61.2	2,990	64,800	103%
Ramshot Hunter	52.1	2,715	53.5	2,780	55.0	2,845	56.5	2,910	57.9	2,975	65,000	99%
Winchester StaBALL 6.5	51.3	2,730	52.7	2,790	54.1	2,850	55.6	2,915	57.0	2,975	64,900	93%
Vihtavuori N555	50.4	2,705	51.8	2,765	53.2	2,830	54.6	2,890	56.0	2,950	65,000	97%
Alliant Reloder 19	52.1	2,675	53.5	2,740	55.0	2,805	56.5	2,875	57.9	2,935	64,800	99%
IMR 7828	54.2	2,675	55.7	2,735	57.2	2,805	58.7	2,870	60.2	2,935	64,700	98%
Norma MRP	53.3	2,675	54.8	2,740	56.3	2,805	57.7	2,870	59.2	2,935	64,800	99%
Alliant Reloder 22	52.6	2,670	54.0	2,730	55.5	2,795	57.0	2,865	58.4	2,925	64,800	100%
Alliant Power Pro 4000-MR	51.5	2,665	52.9	2,725	54.4	2,790	55.8	2,855	57.2	2,915	64,800	94%
Accurate 3100	52.4	2,635	53.9	2,700	55.3	2,765	56.8	2,830	58.2	2,895	64,800	102%
IMR 4831	50.2	2,635	51.6	2,695	53.0	2,760	54.4	2,825	55.8	2,890	64,700	97%
IMR 4350	48.6	2,635	50.0	2,695	51.3	2,755	52.6	2,810	54.0	2,875	64,800	93%
Accurate 4064	45.5	2,645	46.8	2,705	48.0	2,760	49.3	2,820	50.5	2,870	65,000	90%
Vihtavuori N170	56.3	2,620	57.9	2,680	59.5	2,745	61.0	2,805	62.6	2,870	63,900	105%
IMR 4451	48.7	2,620	50.1	2,680	51.4	2,740	52.8	2,800	54.1	2,860	64,700	91%

175 gr Bullet · 25" barrel

COAL: 3.270" • Bullet length: 1.420" • Seat depth: 0.675" • Usable capacity: 61.5 / 71.7 gr H_2O

Powder	STEP 1 · 90%		STEP 2		STEP 3		STEP 4		STEP 5 · LIMIT			
	gr	fps	gr	fps	gr	fps	gr	fps	gr	fps	psi	Fill
Accurate 4350	52.7	2,745	54.2	2,815	55.6	2,875	57.0	2,935	58.5	3,005	64,700	100%
Alliant Reloder 26	54.8	2,675	56.3	2,740	57.8	2,805	59.4	2,875	60.9	2,940	64,800	100%
Hodgdon SUPERFORMANCE	52.5	2,675	54.0	2,740	55.4	2,800	56.8	2,860	58.3	2,930	64,900	93%
IMR 4955	52.2	2,645	53.7	2,710	55.1	2,770	56.5	2,830	58.0	2,900	64,800	95%
Accurate MagPro	56.9	2,625	58.5	2,690	60.0	2,755	61.6	2,825	63.2	2,895	64,600	105%
Alliant Reloder 23	52.1	2,640	53.5	2,700	55.0	2,765	56.5	2,830	57.9	2,895	64,900	102%
Vihtavuori N565	55.3	2,625	56.8	2,690	58.3	2,750	59.9	2,815	61.4	2,880	62,600	105%
Reload Swiss RS76	57.5	2,595	59.1	2,660	60.7	2,725	62.3	2,790	63.9	2,860	64,700	105%
Vihtavuori N560	53.2	2,615	54.7	2,675	56.2	2,735	57.6	2,795	59.1	2,855	64,800	101%
Ramshot Hunter	50.7	2,610	52.1	2,670	53.5	2,730	54.9	2,790	56.3	2,850	64,700	97%
Winchester StaBALL 6.5	49.8	2,610	51.2	2,665	52.5	2,720	53.9	2,780	55.3	2,840	64,900	91%
IMR 7828	52.7	2,580	54.2	2,640	55.6	2,700	57.0	2,760	58.5	2,825	64,700	96%
Norma MRP	51.9	2,575	53.4	2,640	54.8	2,700	56.3	2,765	57.7	2,825	64,900	98%
Alliant Reloder 22	51.2	2,575	52.6	2,630	54.0	2,690	55.5	2,755	56.9	2,820	64,800	98%
Hodgdon Retumbo	55.8	2,550	57.3	2,615	58.9	2,680	60.5	2,745	62.0	2,810	62,900	105%
Alliant Power Pro 4000-MR	50.2	2,565	51.6	2,625	53.0	2,685	54.4	2,745	55.8	2,805	64,900	92%
IMR 4831	49.1	2,545	50.5	2,605	51.9	2,670	53.2	2,725	54.6	2,790	65,000	95%
Winchester StaBALL HD	57.0	2,530	58.6	2,595	60.1	2,655	61.7	2,720	63.3	2,790	62,100	105%
IMR 4350	47.2	2,530	48.5	2,585	49.8	2,640	51.1	2,695	52.4	2,750	64,900	92%
Hodgdon H4831	50.3	2,505	51.7	2,565	53.1	2,620	54.5	2,680	55.9	2,740	64,800	98%

.280 Remington

Remington introduced the .280 Remington in 1957 for its Model 740 autoloading, Model 760 pump-action and Model 721 and 725 bolt-action rifles. The cartridge is based on the .30-06 Springfield case necked down to accept 7mm (.284-inch) bullets. Remington deliberately moved its shoulder forward relative to the .270 Winchester. This keeps a .280 cartridge from being chambered in a .270 rifle. Remington renamed the cartridge the 7mm-06 and then the 7mm Express Remington in late 1978. The new name was confused with the 7mm Remington Magnum. That confusion led the company to restore the .280 Remington name in 1981.

Remington's Core-Lokt loads drive a 140-grain bullet at about 3,000 fps, a 150-grain bullet at about 2,890 fps and a 165-grain bullet at about 2,820 fps. The cartridge offers performance close to that of the .30-06 Springfield. It does so with lighter and aerodynamically efficient bullets. It is suitable for most North American big game.

Cartridge specifications	
Bullet Diameter	**0.284" (7.21 mm)**
Max Case Length	**2.540" (64.52 mm)**
Case Trim Length	**2.530" (64.27 mm)**
Max COAL	**3.330" (84.58 mm)**
Primer Pocket	**Large Rifle**
Standard Twist	**1:9"**
Case Capacity	**68.7 gr H_2O**
Max Pressure	**60,000 psi (SAAMI)**

120 gr Bullet · 25" barrel

COAL: 3.230" • Bullet length: 1.115" • Seat depth: 0.425" • Usable capacity: 62.1 / 68.7 gr H_2O

Powder	STEP 1 · 90%		STEP 2		STEP 3		STEP 4		STEP 5 · LIMIT			
	gr	fps	gr	fps	gr	fps	gr	fps	gr	fps	psi	Fill
Alliant Reloder 26	58.4	3,000	60.0	3,075	61.7	3,160	63.3	3,240	64.9	3,320	59,500	105%
Hodgdon SUPERFORMANCE	55.3	3,010	56.8	3,080	58.3	3,155	59.9	3,235	61.4	3,310	59,900	97%
Vihtavuori N555	54.6	3,010	56.1	3,080	57.7	3,160	59.2	3,235	60.7	3,310	59,900	105%
Hodgdon Leverevolution	47.7	3,030	49.0	3,100	50.4	3,170	51.7	3,235	53.0	3,300	59,900	82%
IMR 4350	52.8	3,005	54.3	3,075	55.8	3,150	57.2	3,220	58.7	3,295	59,900	101%
Alliant Reloder 16	51.5	3,015	52.9	3,080	54.4	3,150	55.8	3,220	57.2	3,290	60,000	102%
Hodgdon Hybrid 100V	51.9	2,990	53.4	3,070	54.8	3,140	56.3	3,220	57.7	3,290	59,900	104%
Hodgdon H4350	51.7	2,970	53.1	3,040	54.5	3,105	56.0	3,180	57.4	3,250	59,800	93%
IMR 4064	46.5	2,990	47.8	3,055	49.1	3,120	50.4	3,185	51.7	3,245	59,800	89%
Reload Swiss RS70	55.5	2,935	57.0	3,005	58.6	3,085	60.2	3,165	61.7	3,240	59,900	100%
IMR 4955	54.3	2,920	55.8	2,995	57.3	3,070	58.8	3,145	60.3	3,220	59,800	98%
Alliant Reloder 19	54.5	2,910	56.0	2,985	57.5	3,060	59.1	3,140	60.6	3,215	60,000	104%
Alliant Reloder 15	46.1	2,945	47.4	3,010	48.7	3,075	49.9	3,135	51.2	3,200	59,800	88%
IMR 4831	52.9	2,900	54.4	2,975	55.8	3,045	57.3	3,125	58.8	3,200	59,800	102%
Hodgdon H380	49.1	2,935	50.5	3,000	51.8	3,065	53.1	3,130	54.5	3,195	59,800	93%
Winchester StaBALL Match	46.6	2,940	47.9	3,005	49.2	3,065	50.5	3,130	51.8	3,195	60,000	94%
Vihtavuori N150	46.3	2,935	47.6	3,000	48.8	3,060	50.1	3,120	51.4	3,185	60,000	93%
Hodgdon H414	49.8	2,900	51.2	2,965	52.5	3,030	53.9	3,100	55.3	3,170	59,800	91%
Winchester 760	50.0	2,900	51.4	2,965	52.8	3,035	54.1	3,100	55.5	3,165	60,000	92%
Hodgdon H4831SC	54.3	2,865	55.8	2,940	57.3	3,010	58.8	3,085	60.3	3,155	59,800	98%

130 gr Bullet · 25" barrel

COAL: 3.205" • Bullet length: 1.060" • Seat depth: 0.395" • Usable capacity: 62.7 / 68.7 gr H_2O

Powder	STEP 1 · 90%		STEP 2		STEP 3		STEP 4		STEP 5 · LIMIT			
	gr	fps	gr	fps	gr	fps	gr	fps	gr	fps	psi	Fill
Alliant Reloder 26	58.1	2,950	59.7	3,025	61.3	3,100	62.9	3,175	64.5	3,255	59,800	103%
Hodgdon SUPERFORMANCE	54.7	2,935	56.2	3,005	57.8	3,085	59.3	3,155	60.8	3,225	59,900	95%
Vihtavuori N555	53.6	2,935	55.1	3,005	56.6	3,075	58.1	3,145	59.6	3,220	59,800	102%
Hodgdon Hybrid 100V	51.6	2,925	53.0	2,995	54.5	3,070	55.9	3,140	57.3	3,210	59,900	102%
Alliant Reloder 23	54.5	2,915	56.0	2,985	57.5	3,055	59.1	3,130	60.6	3,200	57,500	105%
IMR 4350	52.0	2,920	53.5	2,990	54.9	3,055	56.3	3,120	57.8	3,195	59,900	99%
Vihtavuori N560	56.7	2,910	58.3	2,980	59.9	3,050	61.4	3,115	63.0	3,190	58,800	105%
Reload Swiss RS60	50.8	2,900	52.2	2,965	53.6	3,035	55.0	3,105	56.4	3,175	59,900	93%
Alliant Reloder 16	50.5	2,910	51.9	2,975	53.3	3,040	54.7	3,105	56.1	3,170	59,800	99%
Winchester StaBALL 6.5	51.7	2,905	53.1	2,970	54.5	3,035	56.0	3,105	57.4	3,170	59,900	92%
Ramshot Big Game	49.9	2,895	51.3	2,960	52.6	3,025	54.0	3,090	55.4	3,155	59,800	90%
Ramshot Hunter	52.2	2,855	53.7	2,925	55.1	2,990	56.5	3,055	58.0	3,125	59,900	98%
Vihtavuori N165	55.2	2,815	56.7	2,880	58.3	2,950	59.8	3,020	61.3	3,090	57,100	105%
Hodgdon H380	48.2	2,830	49.6	2,895	50.9	2,955	52.3	3,025	53.6	3,085	59,800	91%
Hodgdon H4831SC	53.8	2,805	55.3	2,875	56.8	2,945	58.3	3,015	59.8	3,085	59,900	96%
Accurate 4064	45.5	2,825	46.8	2,890	48.0	2,945	49.3	3,010	50.6	3,070	59,900	89%
Alliant Reloder 15	45.1	2,830	46.4	2,895	47.6	2,950	48.9	3,015	50.1	3,070	59,700	85%
IMR 4451	49.6	2,790	51.0	2,860	52.4	2,925	53.7	2,985	55.1	3,055	59,900	91%
IMR 4166	43.7	2,800	44.9	2,860	46.1	2,920	47.3	2,980	48.5	3,035	59,900	86%
Vihtavuori N540	44.6	2,805	45.8	2,860	47.0	2,920	48.3	2,980	49.5	3,035	59,800	84%

140 gr Bullet · 25" barrel

COAL: 3.220" • Bullet length: 1.179" • Seat depth: 0.499" • Usable capacity: 61.0 / 68.7 gr H_2O

Powder	STEP 1 · 90%		STEP 2		STEP 3		STEP 4		STEP 5 · LIMIT			
	gr	fps	gr	fps	gr	fps	gr	fps	gr	fps	psi	Fill
Alliant Reloder 26	56.3	2,860	57.8	2,930	59.4	3,005	61.0	3,080	62.5	3,150	60,000	103%
Hodgdon SUPERFORMANCE	52.9	2,835	54.4	2,905	55.8	2,970	57.3	3,040	58.8	3,115	59,800	94%
Alliant Reloder 23	53.1	2,830	54.6	2,900	56.0	2,965	57.5	3,035	59.0	3,105	58,400	105%
Vihtavuori N555	51.7	2,840	53.1	2,905	54.5	2,970	56.0	3,040	57.4	3,105	59,900	101%
Hodgdon Hybrid 100V	50.0	2,825	51.4	2,895	52.8	2,965	54.1	3,030	55.5	3,100	60,000	102%
Vihtavuori N560	54.9	2,815	56.4	2,880	58.0	2,950	59.5	3,020	61.0	3,085	59,800	105%
Alliant Reloder 22	53.6	2,795	55.1	2,865	56.6	2,935	58.1	3,005	59.6	3,080	60,000	104%
IMR 4350	50.1	2,810	51.5	2,875	52.9	2,940	54.3	3,005	55.7	3,070	59,900	98%
Reload Swiss RS60	49.1	2,795	50.5	2,865	51.8	2,925	53.1	2,990	54.5	3,055	59,800	92%
Alliant Reloder 19	52.3	2,765	53.8	2,835	55.2	2,905	56.6	2,970	58.1	3,045	59,800	101%
Alliant Reloder 16	48.6	2,795	50.0	2,855	51.3	2,915	52.6	2,975	54.0	3,040	59,900	98%
Alliant Power Pro 4000-MR	51.5	2,770	52.9	2,835	54.4	2,905	55.8	2,970	57.2	3,035	60,000	95%
Hodgdon H4350	49.0	2,780	50.4	2,845	51.7	2,905	53.0	2,970	54.4	3,035	59,800	90%
IMR 4831	50.9	2,755	52.3	2,820	53.7	2,890	55.1	2,955	56.5	3,025	59,800	99%
Ramshot Hunter	50.5	2,755	51.9	2,820	53.3	2,880	54.7	2,945	56.1	3,015	59,900	98%
Hodgdon H4831	52.8	2,725	54.3	2,795	55.8	2,865	57.2	2,930	58.7	3,000	59,800	103%
Vihtavuori N165	53.6	2,730	55.1	2,795	56.6	2,860	58.1	2,930	59.6	3,000	58,300	105%
Hodgdon H4831SC	52.0	2,710	53.5	2,780	54.9	2,845	56.3	2,910	57.8	2,980	59,800	95%
Hodgdon H414	47.4	2,705	48.7	2,765	50.0	2,825	51.4	2,890	52.7	2,955	59,800	88%
Winchester 760	47.6	2,705	48.9	2,765	50.3	2,830	51.6	2,890	52.9	2,950	59,900	89%

150 gr Bullet · 25" barrel

COAL: 3.275" • Bullet length: 1.271" • Seat depth: 0.537" • Usable capacity: 60.5 / 68.7 gr H_2O

Powder	STEP 1 · 90%		STEP 2		STEP 3		STEP 4		STEP 5 · LIMIT			
	gr	fps	gr	fps	gr	fps	gr	fps	gr	fps	psi	Fill
Alliant Reloder 26	55.1	2,780	56.6	2,850	58.2	2,920	59.7	2,990	61.2	3,060	59,900	102%
Alliant Reloder 23	52.5	2,770	54.0	2,835	55.4	2,900	56.8	2,965	58.3	3,035	59,900	104%
Hodgdon SUPERFORMANCE	51.8	2,750	53.3	2,820	54.7	2,885	56.1	2,950	57.6	3,020	59,900	93%
Hodgdon Hybrid 100V	49.0	2,740	50.4	2,810	51.7	2,870	53.0	2,935	54.4	3,000	59,800	101%
Vihtavuori N555	50.0	2,735	51.4	2,800	52.8	2,865	54.2	2,930	55.6	2,995	59,700	99%
Alliant Reloder 22	52.5	2,720	54.0	2,790	55.4	2,850	56.8	2,915	58.3	2,985	59,800	102%
Reload Swiss RS62	50.8	2,720	52.2	2,785	53.6	2,850	55.0	2,915	56.4	2,980	60,000	97%
Reload Swiss RS70	52.2	2,710	53.7	2,775	55.1	2,840	56.5	2,905	58.0	2,975	59,900	97%
Vihtavuori N560	53.3	2,715	54.8	2,780	56.3	2,845	57.7	2,905	59.2	2,970	59,800	102%
IMR 4350	48.9	2,715	50.3	2,780	51.6	2,840	52.9	2,900	54.3	2,965	59,900	96%
Alliant Reloder 19	51.3	2,695	52.7	2,760	54.1	2,825	55.6	2,895	57.0	2,960	59,900	100%
IMR 4831	50.0	2,685	51.4	2,750	52.8	2,815	54.1	2,875	55.5	2,945	60,000	98%
Ramshot Grand	56.2	2,665	57.8	2,735	59.3	2,800	60.9	2,875	62.4	2,945	57,400	105%
Accurate MagPro	56.0	2,655	57.5	2,725	59.1	2,795	60.7	2,870	62.2	2,940	58,900	105%
Hodgdon H4350	47.7	2,685	49.0	2,745	50.4	2,810	51.7	2,870	53.0	2,930	59,900	88%
Reload Swiss RS76	56.7	2,655	58.3	2,725	59.9	2,795	61.4	2,860	63.0	2,930	57,300	105%
Hodgdon H4831	51.8	2,655	53.2	2,720	54.6	2,785	56.1	2,850	57.5	2,915	59,900	102%
Accurate 4350	48.1	2,660	49.4	2,720	50.8	2,785	52.1	2,845	53.4	2,905	59,800	92%
Hodgdon H4831SC	51.0	2,635	52.4	2,700	53.9	2,765	55.3	2,830	56.7	2,895	60,000	94%
Vihtavuori N170	55.0	2,630	56.5	2,690	58.0	2,750	59.6	2,815	61.1	2,880	57,000	105%

160 gr Bullet · 25" barrel

COAL: 3.258" • Bullet length: 1.386" • Seat depth: 0.669" • Usable capacity: 58.4 / 68.7 gr H_2O

Powder	STEP 1 · 90%		STEP 2		STEP 3		STEP 4		STEP 5 · LIMIT			
	gr	fps	gr	fps	gr	fps	gr	fps	gr	fps	psi	Fill
Alliant Reloder 26	53.1	2,690	54.6	2,755	56.0	2,820	57.5	2,890	59.0	2,960	59,900	101%
Alliant Reloder 23	50.6	2,670	52.0	2,735	53.4	2,800	54.8	2,865	56.2	2,925	59,900	104%
Hodgdon SUPERFORMANCE	50.0	2,660	51.4	2,720	52.8	2,785	54.1	2,845	55.5	2,910	59,800	93%
Hodgdon Hybrid 100V	47.3	2,645	48.6	2,710	49.9	2,770	51.2	2,835	52.5	2,895	59,900	101%
Alliant Reloder 22	50.6	2,630	52.0	2,690	53.4	2,755	54.8	2,820	56.2	2,885	59,900	102%
Vihtavuori N555	48.1	2,645	49.4	2,705	50.8	2,765	52.1	2,825	53.4	2,885	59,900	98%
Reload Swiss RS62	48.9	2,620	50.3	2,685	51.6	2,745	52.9	2,810	54.3	2,875	59,800	97%
Alliant Reloder 19	49.4	2,605	50.8	2,665	52.1	2,725	53.5	2,795	54.9	2,860	59,800	100%
Vihtavuori N560	51.2	2,615	52.6	2,675	54.0	2,735	55.5	2,800	56.9	2,860	60,000	102%
IMR 4955	49.2	2,600	50.6	2,665	52.0	2,730	53.3	2,790	54.7	2,855	59,900	94%
IMR 4350	46.9	2,610	48.2	2,670	49.5	2,725	50.8	2,785	52.1	2,850	59,800	96%
Winchester Supreme 780	52.4	2,590	53.9	2,655	55.3	2,720	56.8	2,785	58.2	2,850	60,000	100%
IMR 4831	48.2	2,590	49.5	2,650	50.9	2,720	52.2	2,780	53.5	2,840	59,900	98%
Reload Swiss RS76	54.7	2,565	56.2	2,630	57.8	2,700	59.3	2,765	60.8	2,830	57,400	105%
IMR 7828	50.8	2,570	52.2	2,635	53.6	2,695	55.0	2,760	56.4	2,825	59,900	97%
Hodgdon H4350	45.8	2,580	47.1	2,640	48.3	2,700	49.6	2,760	50.9	2,820	59,900	88%
Hodgdon H4831	49.8	2,565	51.2	2,625	52.5	2,685	53.9	2,750	55.3	2,815	59,800	102%
Alliant Reloder 16	45.4	2,585	46.6	2,635	47.9	2,695	49.1	2,750	50.4	2,810	60,000	96%
Ramshot Magnum	54.4	2,520	55.9	2,585	57.4	2,650	58.9	2,715	60.4	2,785	59,800	104%
Vihtavuori N170	53.0	2,535	54.5	2,595	56.0	2,655	57.4	2,715	58.9	2,780	57,500	105%

168 gr Bullet · 25" barrel

COAL: 3.300" • Bullet length: 1.426" • Seat depth: 0.666" • Usable capacity: 58.6 / 68.7 gr H_2O

Powder	STEP 1 · 90%		STEP 2		STEP 3		STEP 4		STEP 5 · LIMIT			
	gr	fps	gr	fps	gr	fps	gr	fps	gr	fps	psi	Fill
Alliant Reloder 26	52.6	2,640	54.0	2,705	55.5	2,770	57.0	2,840	58.4	2,900	59,700	100%
Alliant Reloder 23	50.0	2,615	51.4	2,675	52.8	2,740	54.2	2,800	55.6	2,865	59,900	103%
Hodgdon SUPERFORMANCE	49.5	2,605	50.9	2,670	52.3	2,730	53.6	2,790	55.0	2,855	60,000	92%
Hodgdon Hybrid 100V	46.8	2,590	48.1	2,650	49.4	2,710	50.7	2,775	52.0	2,835	59,700	100%
Alliant Reloder 22	50.0	2,575	51.4	2,640	52.8	2,700	54.2	2,765	55.6	2,830	59,800	101%
Ramshot Grand	54.4	2,560	55.9	2,625	57.4	2,690	58.9	2,760	60.4	2,825	58,900	105%
Reload Swiss RS62	48.5	2,575	49.9	2,640	51.2	2,700	52.5	2,760	53.9	2,825	60,000	96%
Alliant Reloder 19	49.1	2,565	50.5	2,630	51.8	2,685	53.1	2,745	54.5	2,810	60,000	99%
Norma MRP	49.8	2,545	51.2	2,610	52.5	2,665	53.9	2,730	55.3	2,790	59,900	98%
Vihtavuori N560	50.3	2,550	51.7	2,610	53.1	2,670	54.5	2,730	55.9	2,790	60,000	100%
IMR 4831	47.7	2,540	49.0	2,600	50.4	2,665	51.7	2,725	53.0	2,785	59,700	97%
IMR 4350	46.3	2,550	47.6	2,610	48.8	2,660	50.1	2,720	51.4	2,780	59,800	94%
Alliant Power Pro 4000-MR	48.1	2,535	49.4	2,595	50.8	2,655	52.1	2,715	53.4	2,770	59,800	93%
Hodgdon H4831	49.3	2,515	50.7	2,580	52.0	2,635	53.4	2,700	54.8	2,760	60,000	100%
Accurate 3100	48.9	2,505	50.3	2,570	51.6	2,625	52.9	2,685	54.3	2,750	59,800	101%
Hodgdon H4350	45.2	2,525	46.5	2,585	47.7	2,640	49.0	2,695	50.2	2,750	59,900	86%
Vihtavuori N165	50.1	2,510	51.5	2,570	52.9	2,630	54.3	2,690	55.7	2,750	59,800	102%
Ramshot Hunter	47.1	2,515	48.4	2,575	49.7	2,630	51.0	2,690	52.3	2,745	59,900	95%
Ramshot Magnum	54.0	2,485	55.5	2,550	57.0	2,615	58.5	2,680	60.0	2,745	59,900	103%
Accurate 4350	45.7	2,505	47.0	2,560	48.3	2,620	49.5	2,675	50.8	2,735	59,800	91%

175 gr Bullet · 25" barrel

COAL: 3.260" • Bullet length: 1.456" • Seat depth: 0.736" • Usable capacity: 57.5 / 68.7 gr H_2O

Powder	STEP 1 · 90%		STEP 2		STEP 3		STEP 4		STEP 5 · LIMIT			
	gr	fps	gr	fps	gr	fps	gr	fps	gr	fps	psi	Fill
Alliant Reloder 26	51.4	2,580	52.8	2,640	54.3	2,710	55.7	2,770	57.1	2,835	59,700	100%
Alliant Reloder 23	48.9	2,555	50.3	2,615	51.6	2,675	52.9	2,730	54.3	2,795	59,800	103%
Hodgdon SUPERFORMANCE	48.3	2,540	49.6	2,600	51.0	2,660	52.4	2,725	53.7	2,780	59,800	91%
Hodgdon Hybrid 100V	45.8	2,530	47.1	2,590	48.3	2,645	49.6	2,705	50.9	2,770	59,800	99%
Accurate MagPro	52.9	2,500	54.4	2,565	55.8	2,630	57.3	2,695	58.8	2,765	60,000	104%
Alliant Reloder 22	49.0	2,525	50.4	2,585	51.7	2,645	53.0	2,700	54.4	2,765	59,900	101%
Ramshot Grand	53.3	2,505	54.8	2,570	56.3	2,635	57.7	2,700	59.2	2,765	59,100	105%
Alliant Reloder 19	48.0	2,505	49.3	2,565	50.6	2,625	52.0	2,690	53.3	2,750	60,000	99%
IMR 7828SSC	49.1	2,490	50.5	2,555	51.8	2,610	53.1	2,670	54.5	2,730	59,800	99%
IMR 4831	46.7	2,485	48.0	2,545	49.3	2,605	50.6	2,665	51.9	2,725	59,900	97%
Vihtavuori N560	49.0	2,485	50.4	2,545	51.7	2,600	53.0	2,655	54.4	2,710	59,800	99%
Alliant Power Pro 4000-MR	47.0	2,475	48.3	2,530	49.6	2,590	50.9	2,645	52.2	2,705	59,800	93%
Ramshot Magnum	52.8	2,435	54.3	2,495	55.8	2,560	57.2	2,620	58.7	2,685	59,800	102%
Vihtavuori N165	49.0	2,455	50.4	2,515	51.7	2,570	53.0	2,625	54.4	2,685	60,000	102%
Hodgdon H4350	44.0	2,455	45.2	2,510	46.5	2,570	47.7	2,625	48.9	2,680	59,800	86%
Ramshot Hunter	46.0	2,450	47.3	2,510	48.5	2,565	49.8	2,620	51.1	2,680	59,900	94%
Vihtavuori N170	51.8	2,445	53.2	2,500	54.6	2,560	56.1	2,620	57.5	2,675	59,900	104%
Hodgdon H4831SC	47.5	2,435	48.8	2,495	50.1	2,550	51.5	2,610	52.8	2,670	59,700	92%
Alliant Reloder 16	43.5	2,445	44.7	2,500	45.9	2,550	47.1	2,605	48.3	2,660	59,800	93%
IMR 4451	43.7	2,400	44.9	2,455	46.1	2,505	47.3	2,560	48.5	2,615	60,000	88%

.284 Winchester

Winchester introduced the .284 Winchester in 1963 for its Model 88 lever-action and Model 100 semi-automatic rifles. The goal was to equal the performance of the .270 Winchester and .280 Remington in a short cartridge that would work in those actions. Winchester designed a new case with a wide body and a rebated rim. The rim matches the standard .30-06-size bolt face. Both SAAMI and C.I.P. have standardized the cartridge.

With bullets of equal weight the .284 Winchester is ballistically similar to the .280 Remington. It never became popular as a sporting cartridge. Instead it found a second life in long-range target shooting. It is widely used in F-Class competition with heavy handloaded 7mm match bullets. The case also became the parent of many wildcats. These include the 6mm-284 and the 6.5-284. Norma later standardized the latter as the 6.5-284 Norma.

Cartridge specifications	
Bullet Diameter	**0.284" (7.21 mm)**
Max Case Length	**2.170" (55.12 mm)**
Case Trim Length	**2.160" (54.86 mm)**
Max COAL	**2.800" (71.12 mm)**
Primer Pocket	**Large Rifle**
Standard Twist	**1:10"**
Case Capacity	**65.8 gr H_2O**
Max Pressure	**56,000 psi (SAAMI)**

120 gr Bullet · 25" barrel

COAL: 2.800" • Bullet length: 1.097" • Seat depth: 0.467" • Usable capacity: 58.6 / 65.8 gr H_2O

Powder	STEP 1 · 90%		STEP 2		STEP 3		STEP 4		STEP 5 · LIMIT			
	gr	fps	gr	fps	gr	fps	gr	fps	gr	fps	psi	Fill
IMR 4350	51.6	2,910	53.0	2,975	54.5	3,050	55.9	3,120	57.3	3,190	53,700	105%
Winchester StaBALL 6.5	51.2	2,905	52.6	2,970	54.0	3,040	55.5	3,110	56.9	3,180	55,900	98%
Hodgdon Leverevolution	46.0	2,910	47.3	2,980	48.5	3,040	49.8	3,105	51.1	3,170	55,900	83%
Hodgdon H4350	50.7	2,885	52.1	2,950	53.5	3,020	54.9	3,090	56.3	3,160	56,000	97%
Hodgdon SUPERFORMANCE	53.1	2,865	54.6	2,935	56.0	3,005	57.5	3,080	59.0	3,155	55,900	99%
IMR 4895	44.9	2,895	46.1	2,955	47.4	3,020	48.6	3,080	49.9	3,145	55,900	88%
Alliant Reloder 16	49.4	2,875	50.8	2,940	52.1	3,005	53.5	3,070	54.9	3,140	55,900	104%
Hodgdon H4831SC	54.5	2,840	56.0	2,915	57.5	2,985	59.0	3,060	60.5	3,135	55,900	104%
IMR 4064	45.2	2,885	46.5	2,950	47.7	3,010	49.0	3,075	50.2	3,135	55,900	92%
Ramshot Big Game	48.8	2,870	50.1	2,930	51.5	3,000	52.9	3,070	54.2	3,135	56,000	94%
Winchester 748	45.6	2,855	46.9	2,920	48.2	2,990	49.4	3,050	50.7	3,115	55,900	89%
Accurate 4350	50.3	2,825	51.7	2,895	53.1	2,965	54.5	3,035	55.9	3,105	55,900	100%
Norma 204	50.9	2,830	52.3	2,900	53.7	2,965	55.1	3,035	56.5	3,105	55,900	101%
Hodgdon H380	47.9	2,840	49.2	2,900	50.5	2,965	51.9	3,035	53.2	3,100	55,900	96%
Hodgdon Varget	44.3	2,840	45.5	2,905	46.8	2,970	48.0	3,030	49.2	3,090	55,900	87%
Reload Swiss RS50	45.7	2,805	47.0	2,865	48.3	2,930	49.5	2,990	50.8	3,055	55,900	91%
Alliant Reloder 19	52.1	2,760	53.5	2,825	55.0	2,900	56.5	2,975	57.9	3,045	55,500	105%
IMR 4007 SSC	48.3	2,775	49.6	2,840	51.0	2,910	52.4	2,980	53.7	3,045	55,900	98%
Vihtavuori N140	44.0	2,800	45.2	2,860	46.5	2,925	47.7	2,985	48.9	3,045	55,900	85%
IMR 7828	54.5	2,725	56.0	2,800	57.5	2,870	59.1	2,950	60.6	3,025	55,800	104%

139 gr Bullet · 25" barrel

COAL: 2.800" • Bullet length: 1.270" • Seat depth: 0.639" • Usable capacity: 56.2 / 65.8 gr H_2O

Powder	STEP 1 · 90%		STEP 2		STEP 3		STEP 4		STEP 5 · LIMIT			
	gr	fps	gr	fps	gr	fps	gr	fps	gr	fps	psi	Fill
IMR 4350	49.1	2,745	50.5	2,810	51.9	2,880	53.2	2,940	54.6	3,010	55,800	104%
Vihtavuori N555	49.5	2,710	50.9	2,775	52.3	2,840	53.6	2,905	55.0	2,970	55,900	105%
Alliant Reloder 26	52.8	2,685	54.3	2,755	55.8	2,825	57.2	2,890	58.7	2,965	54,900	105%
Hodgdon SUPERFORMANCE	50.2	2,690	51.6	2,755	53.0	2,825	54.4	2,890	55.8	2,960	55,900	97%
Hodgdon H4831SC	51.6	2,675	53.0	2,745	54.5	2,815	55.9	2,880	57.3	2,950	55,900	103%
Hodgdon Hybrid 100V	47.3	2,680	48.6	2,745	50.0	2,815	51.3	2,880	52.6	2,950	53,600	105%
Winchester StaBALL 6.5	48.2	2,695	49.6	2,760	50.9	2,820	52.3	2,890	53.6	2,950	55,800	96%
Norma URP	46.8	2,655	48.1	2,720	49.4	2,785	50.7	2,850	52.0	2,915	56,000	101%
Vihtavuori N160	48.9	2,650	50.3	2,715	51.6	2,775	52.9	2,840	54.3	2,905	55,800	105%
Accurate 4350	47.4	2,645	48.7	2,705	50.0	2,770	51.4	2,835	52.7	2,900	55,800	98%
Alliant Reloder 16	46.1	2,660	47.4	2,720	48.7	2,780	49.9	2,835	51.2	2,900	55,800	101%
Norma MRP	50.5	2,625	51.9	2,690	53.3	2,755	54.7	2,820	56.1	2,885	55,900	104%
Accurate 2700	46.1	2,640	47.4	2,700	48.7	2,760	49.9	2,820	51.2	2,880	56,000	93%
Alliant Power Pro 4000-MR	48.7	2,625	50.1	2,690	51.4	2,750	52.8	2,820	54.1	2,880	55,900	98%
Alliant Reloder 19	49.4	2,610	50.8	2,680	52.1	2,740	53.5	2,810	54.9	2,880	55,800	104%
IMR 4064	42.1	2,650	43.3	2,710	44.5	2,765	45.6	2,820	46.8	2,880	55,900	89%
Winchester 748	42.8	2,635	44.0	2,695	45.2	2,755	46.4	2,815	47.6	2,870	55,900	87%
IMR 4007 SSC	45.6	2,595	46.9	2,660	48.2	2,720	49.4	2,780	50.7	2,845	56,000	97%
Hodgdon Varget	41.4	2,615	42.5	2,670	43.7	2,730	44.9	2,790	46.0	2,840	55,900	85%
Vihtavuori N140	41.0	2,565	42.1	2,620	43.3	2,680	44.4	2,735	45.5	2,785	55,900	83%

150 gr Bullet · 25" barrel

COAL: 2.800" • Bullet length: 1.339" • Seat depth: 0.709" • Usable capacity: 55.3 / 65.8 gr H_2O

Powder	STEP 1 · 90%		STEP 2		STEP 3		STEP 4		STEP 5 · LIMIT			
	gr	fps	gr	fps	gr	fps	gr	fps	gr	fps	psi	Fill
IMR 4350	47.7	2,650	49.0	2,710	50.4	2,775	51.7	2,840	53.0	2,900	55,900	103%
Alliant Reloder 26	51.8	2,620	53.3	2,690	54.7	2,755	56.1	2,820	57.6	2,895	55,900	105%
Hodgdon Hybrid 100V	46.6	2,620	47.9	2,680	49.2	2,745	50.5	2,810	51.8	2,875	55,000	105%
IMR 4831	48.7	2,615	50.1	2,680	51.4	2,745	52.8	2,810	54.1	2,875	55,300	105%
Hodgdon SUPERFORMANCE	49.0	2,610	50.4	2,675	51.7	2,735	53.0	2,795	54.4	2,865	56,000	96%
Vihtavuori N555	47.9	2,620	49.2	2,680	50.5	2,740	51.9	2,805	53.2	2,865	55,800	103%
Hodgdon H4831SC	50.2	2,590	51.6	2,655	53.0	2,720	54.4	2,785	55.8	2,855	55,800	101%
Hodgdon H4350	46.0	2,590	47.3	2,655	48.5	2,710	49.8	2,770	51.1	2,835	56,000	93%
Accurate 4350	46.2	2,560	47.5	2,620	48.8	2,680	50.0	2,735	51.3	2,800	55,900	97%
Vihtavuori N160	47.4	2,555	48.7	2,610	50.0	2,670	51.4	2,735	52.7	2,795	55,900	103%
Alliant Reloder 19	48.2	2,540	49.5	2,600	50.9	2,670	52.2	2,730	53.5	2,790	55,800	103%
Alliant Power Pro 4000-MR	47.4	2,535	48.7	2,595	50.0	2,655	51.4	2,720	52.7	2,785	55,900	97%
Winchester 760	45.4	2,550	46.6	2,605	47.9	2,665	49.1	2,725	50.4	2,785	55,900	94%
Winchester Supreme 780	51.1	2,515	52.5	2,575	54.0	2,645	55.4	2,710	56.8	2,775	55,900	103%
Accurate 2700	44.7	2,535	46.0	2,595	47.2	2,650	48.5	2,710	49.7	2,770	55,800	91%
IMR 7828	49.9	2,515	51.3	2,580	52.6	2,640	54.0	2,705	55.4	2,770	55,900	101%
Alliant Power Pro 2000-MR	43.2	2,535	44.4	2,590	45.6	2,650	46.8	2,705	48.0	2,765	55,700	91%
Hodgdon H380	43.4	2,515	44.6	2,570	45.8	2,625	47.0	2,685	48.2	2,740	55,800	92%
Vihtavuori N550	42.8	2,515	44.0	2,570	45.2	2,625	46.4	2,680	47.6	2,735	56,000	90%
Hodgdon Varget	40.1	2,505	41.2	2,560	42.3	2,610	43.4	2,665	44.5	2,720	55,900	84%

162 gr Bullet · 25" barrel

COAL: 2.800" • Bullet length: 1.405" • Seat depth: 0.775" • Usable capacity: 54.4 / 65.8 gr H_2O

Powder	STEP 1 · 90%		STEP 2		STEP 3		STEP 4		STEP 5 · LIMIT			
	gr	fps	gr	fps	gr	fps	gr	fps	gr	fps	psi	Fill
Alliant Reloder 26	50.4	2,540	51.8	2,600	53.2	2,665	54.6	2,730	56.0	2,795	55,800	103%
Hodgdon Hybrid 100V	45.6	2,535	46.9	2,600	48.2	2,660	49.4	2,720	50.7	2,785	55,700	104%
IMR 4831	47.6	2,535	48.9	2,595	50.3	2,660	51.6	2,725	52.9	2,785	55,800	104%
IMR 4350	46.2	2,545	47.5	2,605	48.8	2,665	50.0	2,720	51.3	2,780	56,000	101%
Hodgdon SUPERFORMANCE	47.5	2,510	48.8	2,570	50.1	2,630	51.5	2,695	52.8	2,755	55,800	95%
IMR 7828SSC	49.4	2,505	50.8	2,570	52.1	2,630	53.5	2,690	54.9	2,755	54,700	105%
Vihtavuori N555	46.2	2,520	47.5	2,580	48.8	2,640	50.0	2,695	51.3	2,755	55,800	101%
Alliant Reloder 23	47.3	2,490	48.6	2,550	50.0	2,615	51.3	2,675	52.6	2,735	53,700	105%
Hodgdon H4350	44.4	2,485	45.6	2,540	46.8	2,595	48.1	2,655	49.3	2,715	55,800	91%
Winchester StaBALL 6.5	45.5	2,490	46.8	2,550	48.0	2,605	49.3	2,660	50.5	2,715	55,800	94%
Ramshot Hunter	46.1	2,470	47.4	2,530	48.7	2,590	49.9	2,645	51.2	2,705	55,900	100%
Alliant Reloder 19	46.9	2,460	48.2	2,520	49.5	2,580	50.8	2,640	52.1	2,700	55,900	102%
Norma MRP	47.7	2,450	49.0	2,510	50.4	2,570	51.7	2,630	53.0	2,690	55,800	101%
Winchester Supreme 780	49.7	2,440	51.1	2,500	52.5	2,565	53.8	2,625	55.2	2,690	55,800	102%
Accurate 4350	44.7	2,455	46.0	2,515	47.2	2,570	48.5	2,630	49.7	2,685	55,800	95%
Alliant Power Pro 4000-MR	46.1	2,445	47.4	2,505	48.7	2,565	49.9	2,620	51.2	2,680	55,800	96%
Vihtavuori N160	45.9	2,450	47.2	2,510	48.5	2,570	49.7	2,620	51.0	2,680	55,900	102%
Winchester 760	44.0	2,445	45.2	2,505	46.5	2,560	47.7	2,620	48.9	2,675	55,900	92%
IMR 4064	39.2	2,415	40.3	2,465	41.4	2,520	42.5	2,570	43.6	2,625	55,800	86%
Hodgdon Varget	38.6	2,385	39.7	2,435	40.8	2,490	41.8	2,540	42.9	2,590	55,700	82%

175 gr Bullet · 25" barrel

COAL: 2.800" • Bullet length: 1.509" • Seat depth: 0.879" • Usable capacity: 52.9 / 65.8 gr H_2O

Powder	STEP 1 · 90%		STEP 2		STEP 3		STEP 4		STEP 5 · LIMIT			
	gr	fps	gr	fps	gr	fps	gr	fps	gr	fps	psi	Fill
Alliant Reloder 26	48.7	2,445	50.1	2,505	51.4	2,565	52.8	2,630	54.1	2,690	56,000	103%
IMR 4831	46.0	2,435	47.3	2,495	48.5	2,555	49.8	2,615	51.1	2,675	55,800	104%
Hodgdon Hybrid 100V	44.1	2,435	45.3	2,490	46.5	2,550	47.8	2,610	49.0	2,670	55,800	104%
IMR 7828SSC	47.9	2,420	49.2	2,480	50.5	2,540	51.9	2,600	53.2	2,660	55,700	105%
IMR 4350	44.3	2,425	45.5	2,480	46.8	2,540	48.0	2,595	49.2	2,650	55,800	100%
Hodgdon SUPERFORMANCE	45.9	2,415	47.2	2,470	48.5	2,530	49.7	2,585	51.0	2,645	56,000	94%
Hodgdon H4831SC	47.2	2,405	48.5	2,465	49.8	2,525	51.1	2,580	52.4	2,640	55,900	100%
Alliant Reloder 22	46.3	2,385	47.6	2,445	48.8	2,500	50.1	2,555	51.4	2,615	55,800	103%
Hodgdon H4831	46.5	2,365	47.8	2,425	49.1	2,485	50.4	2,545	51.7	2,605	53,600	105%
Alliant Reloder 19	45.3	2,365	46.5	2,420	47.8	2,480	49.0	2,535	50.3	2,600	56,000	101%
Hodgdon H4350	42.6	2,375	43.8	2,430	45.0	2,485	46.1	2,535	47.3	2,590	55,700	90%
Ramshot Hunter	44.4	2,365	45.6	2,415	46.8	2,470	48.1	2,530	49.3	2,585	55,800	99%
Norma MRP	46.0	2,355	47.3	2,410	48.5	2,465	49.8	2,520	51.1	2,580	55,800	100%
Accurate 4350	43.1	2,355	44.3	2,405	45.5	2,460	46.7	2,515	47.9	2,570	55,900	95%
Alliant Power Pro 4000-MR	44.5	2,345	45.7	2,400	47.0	2,455	48.2	2,510	49.4	2,565	55,900	95%
Accurate MagPro	49.0	2,315	50.4	2,375	51.7	2,435	53.0	2,490	54.4	2,555	53,300	105%
Vihtavuori N160	44.0	2,335	45.2	2,390	46.5	2,445	47.7	2,500	48.9	2,555	55,800	100%
Vihtavuori N165	46.4	2,325	47.7	2,380	49.0	2,435	50.3	2,495	51.6	2,550	55,900	105%
Winchester 760	42.3	2,335	43.5	2,390	44.6	2,440	45.8	2,495	47.0	2,550	55,800	91%
Accurate 3100	45.2	2,315	46.5	2,375	47.7	2,430	49.0	2,490	50.2	2,545	55,900	103%

7-30 Waters

Ken Waters was a longtime reloading columnist. He designed the 7-30 Waters in 1976 by necking down the .30-30 Winchester case to accept 7mm (.284-inch) bullets. His goal was a flatter-shooting cartridge for lever-action deer rifles. Winchester adopted the cartridge commercially in 1984. The company chambered it in the Model 94 Angle Eject with 20- and 24-inch barrels.

Factory loads use 120-grain flat-nose bullets at about 2,700 fps. These bullets are suitable for tubular magazines. The loads give a flatter trajectory than typical .30-30 Winchester loads. Thompson/Center began chambering its Contender single-shot pistols and carbines for the cartridge in 1986. It became popular with handgun hunters. Winchester discontinued its 7-30 Waters rifles in 1997. Federal has offered factory ammunition. Handloaders can form brass from .30-30 Winchester cases.

Cartridge specifications	
Bullet Diameter	**0.284" (7.21 mm)**
Max Case Length	**2.040" (51.82 mm)**
Case Trim Length	**2.030" (51.56 mm)**
Max COAL	**2.700" (68.58 mm)**
Primer Pocket	**Large Rifle**
Standard Twist	**1:10"**
Case Capacity	**44.0 gr H_2O**
Max Pressure	**45,000 psi (SAAMI)**

120 gr Bullet · 25" barrel

COAL: 2.700" • Bullet length: 1.078" • Seat depth: 0.418" • Usable capacity: 37.3 / 44.0 gr H_2O

Powder	STEP 1 · 90%		STEP 2		STEP 3		STEP 4		STEP 5 · LIMIT			
	gr	fps	gr	fps	gr	fps	gr	fps	gr	fps	psi	Fill
Hodgdon Leverevolution	34.7	2,580	35.7	2,645	36.7	2,710	37.6	2,765	38.6	2,830	44,900	99%
Accurate 2520	33.8	2,545	34.8	2,610	35.7	2,665	36.6	2,725	37.6	2,785	44,800	104%
Accurate 2460	32.9	2,550	33.8	2,605	34.7	2,665	35.6	2,720	36.5	2,780	44,900	98%
Hodgdon Varget	33.6	2,520	34.5	2,580	35.5	2,645	36.4	2,705	37.3	2,765	44,900	104%
Vihtavuori N530	31.0	2,540	31.9	2,600	32.7	2,650	33.5	2,705	34.4	2,765	44,900	99%
IMR 4895	33.2	2,515	34.1	2,575	35.0	2,635	36.0	2,700	36.9	2,755	44,800	102%
Hodgdon BL-C(2)	34.5	2,500	35.5	2,565	36.4	2,625	37.3	2,685	38.3	2,750	44,900	103%
Vihtavuori N135	32.0	2,520	32.9	2,580	33.8	2,635	34.6	2,685	35.5	2,745	44,800	103%
Hodgdon H4895	32.0	2,500	32.9	2,560	33.8	2,620	34.7	2,675	35.6	2,735	45,000	99%
Alliant AR-Comp	31.1	2,510	32.0	2,570	32.8	2,620	33.6	2,675	34.5	2,730	44,800	99%
Winchester 748	33.8	2,475	34.8	2,540	35.7	2,600	36.6	2,655	37.6	2,720	44,900	104%
Ramshot TAC	31.9	2,485	32.8	2,545	33.6	2,595	34.5	2,655	35.4	2,715	44,800	101%
IMR 4064	32.9	2,475	33.8	2,530	34.8	2,595	35.7	2,655	36.6	2,710	43,600	105%
Vihtavuori N140	33.1	2,465	34.0	2,525	35.0	2,590	35.9	2,645	36.8	2,705	44,900	101%
Alliant Power Pro Varmint	32.1	2,460	33.0	2,515	33.9	2,575	34.8	2,635	35.7	2,690	44,900	101%
Alliant Reloder 15	32.9	2,440	33.8	2,500	34.8	2,560	35.7	2,620	36.6	2,675	43,900	105%
Hodgdon H335	31.4	2,445	32.3	2,500	33.1	2,550	34.0	2,610	34.9	2,670	44,900	92%
IMR 4320	32.7	2,420	33.6	2,480	34.5	2,540	35.4	2,600	36.3	2,660	44,800	98%
Reload Swiss RS50	33.5	2,415	34.4	2,470	35.4	2,535	36.3	2,590	37.2	2,650	42,800	105%
Hodgdon H322	29.2	2,410	30.0	2,465	30.8	2,520	31.6	2,575	32.4	2,625	45,000	92%

130 gr Bullet · 25" barrel

COAL: 2.550" • Bullet length: 1.060" • Seat depth: 0.550" • Usable capacity: 35.8 / 44.0 gr H_2O

Powder	STEP 1 · 90%		STEP 2		STEP 3		STEP 4		STEP 5 · LIMIT			
	gr	fps	gr	fps	gr	fps	gr	fps	gr	fps	psi	Fill
Hodgdon Leverevolution	33.3	2,475	34.2	2,535	35.1	2,590	36.1	2,655	37.0	2,715	45,000	99%
Accurate 2520	32.4	2,435	33.3	2,495	34.2	2,550	35.1	2,605	36.0	2,665	44,800	103%
Hodgdon Varget	32.1	2,415	33.0	2,475	33.9	2,535	34.8	2,590	35.7	2,650	44,900	104%
Accurate 2460	31.3	2,425	32.2	2,480	33.0	2,530	33.9	2,590	34.8	2,645	45,000	97%
IMR 4895	31.8	2,415	32.7	2,475	33.5	2,525	34.4	2,580	35.3	2,640	44,900	102%
Vihtavuori N530	29.5	2,420	30.3	2,475	31.1	2,525	32.0	2,585	32.8	2,640	44,900	98%
Hodgdon BL-C(2)	33.0	2,395	33.9	2,455	34.9	2,520	35.8	2,580	36.7	2,635	44,800	103%
Vihtavuori N135	30.5	2,405	31.4	2,460	32.2	2,510	33.0	2,560	33.9	2,620	45,000	103%
Hodgdon H4895	30.6	2,395	31.5	2,450	32.3	2,505	33.1	2,555	34.0	2,615	44,800	98%
Winchester 748	32.4	2,380	33.3	2,435	34.2	2,495	35.1	2,550	36.0	2,610	44,800	103%
IMR 4064	31.6	2,385	32.5	2,440	33.4	2,500	34.2	2,550	35.1	2,605	44,300	105%
Shooters World Match Rifle	31.6	2,375	32.5	2,430	33.4	2,490	34.2	2,540	35.1	2,600	44,900	101%
Vihtavuori N140	31.7	2,365	32.6	2,425	33.5	2,480	34.3	2,530	35.2	2,590	44,900	100%
Alliant Reloder 15	31.7	2,360	32.6	2,415	33.5	2,470	34.3	2,520	35.2	2,580	44,700	105%
IMR 8208 XBR	29.8	2,360	30.6	2,410	31.5	2,465	32.3	2,520	33.1	2,570	44,800	100%
Shooters World The Creed	31.9	2,340	32.8	2,400	33.6	2,450	34.5	2,510	35.4	2,565	44,900	103%
Norma 203B	30.9	2,335	31.8	2,395	32.6	2,445	33.4	2,500	34.3	2,555	44,900	104%
Hodgdon H335	30.1	2,340	30.9	2,390	31.8	2,445	32.6	2,500	33.4	2,550	44,900	92%
Reload Swiss RS50	32.1	2,315	33.0	2,370	33.9	2,425	34.8	2,485	35.7	2,540	42,900	105%
Accurate 2230	29.1	2,310	29.9	2,360	30.7	2,410	31.5	2,460	32.3	2,510	44,900	91%

139 gr Bullet · 25" barrel

COAL: 2.550" • Bullet length: 1.261" • Seat depth: 0.751" • Usable capacity: 33.5 / 44.0 gr H_2O

Powder	STEP 1 · 90%		STEP 2		STEP 3		STEP 4		STEP 5 · LIMIT			
	gr	fps	gr	fps	gr	fps	gr	fps	gr	fps	psi	Fill
Hodgdon Leverevolution	31.4	2,345	32.3	2,405	33.1	2,455	34.0	2,515	34.9	2,575	44,900	100%
Accurate 2520	30.6	2,310	31.5	2,365	32.3	2,415	33.1	2,470	34.0	2,525	44,900	104%
Hodgdon Varget	30.2	2,290	31.1	2,350	31.9	2,400	32.8	2,460	33.6	2,515	44,800	104%
IMR 4895	30.0	2,290	30.8	2,345	31.6	2,395	32.5	2,455	33.3	2,505	45,000	103%
Vihtavuori N530	27.8	2,295	28.6	2,350	29.4	2,405	30.1	2,450	30.9	2,505	44,800	99%
Accurate 2460	29.4	2,290	30.2	2,340	31.1	2,395	31.9	2,450	32.7	2,500	44,800	98%
Hodgdon BL-C(2)	31.1	2,270	32.0	2,330	32.9	2,390	33.7	2,440	34.6	2,500	44,700	104%
Winchester 748	30.6	2,260	31.5	2,315	32.3	2,370	33.1	2,420	34.0	2,480	44,900	104%
Hodgdon CFE 223	31.1	2,255	32.0	2,310	32.8	2,365	33.6	2,415	34.5	2,475	43,300	105%
Hodgdon H4895	28.8	2,265	29.6	2,315	30.4	2,370	31.2	2,420	32.0	2,475	44,700	99%
Norma 202	29.2	2,260	30.0	2,310	30.8	2,360	31.6	2,415	32.4	2,465	44,100	105%
Alliant AR-Comp	27.9	2,255	28.7	2,310	29.4	2,355	30.2	2,410	31.0	2,460	44,900	99%
IMR 4064	29.5	2,245	30.3	2,295	31.1	2,350	32.0	2,405	32.8	2,460	43,600	105%
Vihtavuori N140	29.9	2,245	30.7	2,295	31.6	2,355	32.4	2,405	33.2	2,460	45,000	101%
Reload Swiss RS52	30.1	2,230	30.9	2,280	31.8	2,340	32.6	2,395	33.4	2,445	42,600	105%
Shooters World AR Plus	27.0	2,220	27.8	2,275	28.5	2,320	29.3	2,375	30.0	2,420	44,700	91%
Hodgdon H335	28.4	2,215	29.2	2,265	29.9	2,310	30.7	2,365	31.5	2,415	44,800	93%
IMR 4320	29.5	2,200	30.3	2,250	31.1	2,305	32.0	2,365	32.8	2,415	44,700	99%
Alliant TS 15.5	29.3	2,190	30.1	2,245	30.9	2,295	31.7	2,350	32.5	2,400	42,700	105%
Hodgdon H322	26.2	2,170	26.9	2,215	27.6	2,265	28.4	2,320	29.1	2,365	44,700	92%

145 gr Bullet · 25" barrel

COAL: 2.700" • Bullet length: 1.110" • Seat depth: 0.450" • Usable capacity: 37.2 / 44.0 gr H_2O

Powder	STEP 1 · 90%		STEP 2		STEP 3		STEP 4		STEP 5 · LIMIT			
	gr	fps	gr	fps	gr	fps	gr	fps	gr	fps	psi	Fill
Hodgdon Leverevolution	33.1	2,375	34.0	2,430	35.0	2,490	35.9	2,545	36.8	2,600	44,800	95%
Vihtavuori N540	32.7	2,345	33.6	2,400	34.5	2,450	35.4	2,505	36.3	2,560	44,800	104%
Hodgdon BL-C(2)	33.1	2,325	34.0	2,380	35.0	2,440	35.9	2,495	36.8	2,550	44,900	99%
Hodgdon Varget	32.0	2,330	32.9	2,385	33.8	2,440	34.6	2,490	35.5	2,545	44,800	99%
Hodgdon CFE 223	33.3	2,315	34.2	2,370	35.1	2,425	36.1	2,485	37.0	2,535	44,900	101%
Reload Swiss RS52	32.5	2,315	33.4	2,370	34.3	2,425	35.2	2,475	36.1	2,535	44,900	102%
Accurate 2520	32.0	2,320	32.9	2,370	33.8	2,425	34.7	2,480	35.6	2,530	44,800	99%
Winchester 748	32.4	2,300	33.3	2,355	34.2	2,410	35.1	2,465	36.0	2,520	44,900	100%
IMR 4895	31.3	2,300	32.2	2,355	33.0	2,405	33.9	2,460	34.8	2,515	44,800	97%
Ramshot Big Game	34.5	2,285	35.5	2,345	36.4	2,395	37.3	2,450	38.3	2,510	43,500	105%
IMR 4064	31.3	2,290	32.2	2,345	33.0	2,390	33.9	2,445	34.8	2,500	44,900	100%
Accurate 2460	30.7	2,285	31.6	2,340	32.4	2,390	33.3	2,440	34.1	2,490	44,700	92%
Hodgdon H4895	30.3	2,285	31.2	2,340	32.0	2,390	32.9	2,445	33.7	2,490	45,000	94%
Hodgdon H4350	34.8	2,230	35.8	2,290	36.8	2,350	37.7	2,405	38.7	2,465	42,500	105%
Norma 203B	30.6	2,245	31.5	2,300	32.3	2,350	33.1	2,400	34.0	2,455	45,000	99%
Vihtavuori N135	29.7	2,260	30.5	2,305	31.4	2,360	32.2	2,410	33.0	2,455	44,800	96%
Alliant Reloder 15	31.1	2,250	32.0	2,305	32.8	2,350	33.6	2,400	34.5	2,450	44,800	99%
IMR 8208 XBR	29.3	2,240	30.1	2,285	31.0	2,340	31.8	2,390	32.6	2,440	44,900	95%
Winchester 760	34.1	2,210	35.0	2,260	36.0	2,320	37.0	2,380	37.9	2,430	42,900	105%
Hodgdon H335	29.8	2,225	30.6	2,275	31.5	2,330	32.3	2,380	33.1	2,425	44,700	88%

154 gr Bullet · 25" barrel

COAL: 2.700" • Bullet length: 1.363" • Seat depth: 0.703" • Usable capacity: 33.3 / 44.0 gr H_2O

Powder	STEP 1 · 90%		STEP 2		STEP 3		STEP 4		STEP 5 · LIMIT			
	gr	fps	gr	fps	gr	fps	gr	fps	gr	fps	psi	Fill
Hodgdon Leverevolution	30.4	2,220	31.3	2,275	32.1	2,325	32.9	2,375	33.8	2,435	44,600	97%
Hodgdon Varget	29.3	2,170	30.1	2,225	31.0	2,280	31.8	2,330	32.6	2,385	44,900	102%
Accurate 2520	29.6	2,175	30.4	2,225	31.3	2,280	32.1	2,330	32.9	2,380	45,000	102%
Hodgdon BL-C(2)	30.3	2,160	31.2	2,220	32.0	2,270	32.9	2,325	33.7	2,380	44,700	102%
Hodgdon CFE 223	30.6	2,165	31.5	2,220	32.3	2,270	33.1	2,320	34.0	2,375	45,000	104%
IMR 4895	28.9	2,160	29.7	2,210	30.5	2,260	31.3	2,310	32.1	2,365	44,900	100%
Reload Swiss RS52	29.8	2,155	30.6	2,205	31.5	2,265	32.3	2,315	33.1	2,365	44,700	104%
Vihtavuori N540	29.6	2,165	30.4	2,215	31.3	2,270	32.1	2,320	32.9	2,365	42,600	105%
Winchester 748	29.7	2,145	30.5	2,195	31.4	2,250	32.2	2,300	33.0	2,350	44,700	102%
Accurate 2460	28.3	2,140	29.1	2,190	29.9	2,240	30.6	2,285	31.4	2,335	44,900	95%
IMR 4064	28.7	2,135	29.5	2,185	30.3	2,235	31.1	2,285	31.9	2,335	44,800	103%
Hodgdon H4895	27.8	2,130	28.6	2,180	29.4	2,235	30.1	2,280	30.9	2,330	44,700	96%
Vihtavuori N140	28.8	2,115	29.6	2,165	30.4	2,215	31.2	2,265	32.0	2,315	44,900	98%
Reload Swiss RS50	29.9	2,105	30.7	2,155	31.6	2,210	32.4	2,260	33.2	2,310	44,500	105%
Vihtavuori N135	27.5	2,120	28.3	2,170	29.0	2,215	29.8	2,265	30.5	2,310	44,800	99%
Alliant Reloder 15	28.6	2,100	29.4	2,150	30.2	2,200	31.0	2,250	31.8	2,300	44,700	102%
Alliant AR-Comp	26.7	2,100	27.4	2,145	28.2	2,195	28.9	2,240	29.7	2,290	44,800	96%
IMR 8208 XBR	26.9	2,090	27.6	2,135	28.4	2,185	29.1	2,230	29.9	2,280	44,800	97%
Hodgdon H335	27.5	2,085	28.3	2,135	29.0	2,180	29.8	2,230	30.5	2,275	44,800	91%
Shooters World Precision Rifle	28.4	2,080	29.2	2,130	29.9	2,175	30.7	2,225	31.5	2,275	44,200	105%

162 gr Bullet · 25" barrel

COAL: 2.700" • Bullet length: 1.411" • Seat depth: 0.751" • Usable capacity: 32.8 / 44.0 gr H_2O

Powder	STEP 1 · 90%		STEP 2		STEP 3		STEP 4		STEP 5 · LIMIT			
	gr	fps	gr	fps	gr	fps	gr	fps	gr	fps	psi	Fill
Hodgdon Leverevolution	29.8	2,165	30.6	2,215	31.5	2,270	32.3	2,320	33.1	2,370	44,800	96%
Hodgdon BL-C(2)	29.8	2,115	30.6	2,165	31.5	2,220	32.3	2,270	33.1	2,320	45,000	101%
Hodgdon Varget	28.6	2,110	29.4	2,160	30.2	2,215	31.0	2,265	31.8	2,315	44,700	101%
Vihtavuori N540	29.2	2,120	30.0	2,170	30.8	2,220	31.6	2,265	32.4	2,315	43,900	105%
Accurate 2520	28.9	2,110	29.7	2,160	30.5	2,210	31.3	2,260	32.1	2,305	44,800	101%
Hodgdon CFE 223	29.9	2,105	30.7	2,150	31.6	2,210	32.4	2,255	33.2	2,305	44,700	103%
Reload Swiss RS52	29.2	2,100	30.0	2,150	30.8	2,200	31.6	2,255	32.4	2,305	44,700	104%
Winchester 748	29.1	2,090	29.9	2,140	30.7	2,190	31.5	2,240	32.3	2,290	44,700	101%
IMR 4064	28.0	2,075	28.8	2,125	29.6	2,175	30.3	2,220	31.1	2,270	44,800	101%
Hodgdon H4895	27.2	2,070	27.9	2,115	28.7	2,170	29.4	2,210	30.2	2,265	44,800	95%
Vihtavuori N530	25.7	2,075	26.4	2,120	27.1	2,165	27.9	2,220	28.6	2,265	44,900	94%
Accurate 2460	27.5	2,070	28.3	2,120	29.1	2,165	29.8	2,210	30.6	2,260	45,000	94%
Reload Swiss RS50	29.3	2,050	30.1	2,100	31.0	2,155	31.8	2,205	32.6	2,255	44,900	104%
Shooters World The Creed	28.4	2,050	29.2	2,100	30.0	2,145	30.8	2,195	31.6	2,245	44,800	100%
Vihtavuori N140	28.1	2,055	28.9	2,105	29.6	2,145	30.4	2,195	31.2	2,245	44,800	97%
Alliant Power Pro Varmint	27.5	2,045	28.3	2,095	29.0	2,140	29.8	2,190	30.5	2,235	44,900	98%
Alliant Reloder 15	27.9	2,045	28.7	2,090	29.4	2,135	30.2	2,185	31.0	2,235	44,900	101%
Vihtavuori N135	26.7	2,050	27.4	2,095	28.2	2,145	28.9	2,185	29.7	2,235	44,900	98%
Accurate 4064	27.9	2,030	28.7	2,080	29.4	2,125	30.2	2,175	31.0	2,225	43,000	105%
Hodgdon H335	26.8	2,020	27.6	2,070	28.3	2,115	29.1	2,165	29.8	2,205	44,800	90%

175 gr Bullet · 25" barrel

COAL: 2.700" • Bullet length: 1.292" • Seat depth: 0.633" • Usable capacity: 33.9 / 44.0 gr H_2O

Powder	STEP 1 · 90%		STEP 2		STEP 3		STEP 4		STEP 5 · LIMIT			
	gr	fps	gr	fps	gr	fps	gr	fps	gr	fps	psi	Fill
Hodgdon Leverevolution	29.7	2,080	30.5	2,130	31.4	2,185	32.2	2,230	33.0	2,280	44,900	93%
Hodgdon BL-C(2)	29.8	2,040	30.6	2,090	31.5	2,145	32.3	2,195	33.1	2,240	44,700	98%
Ramshot Big Game	31.4	2,040	32.3	2,090	33.1	2,135	34.0	2,190	34.9	2,240	45,000	105%
Hodgdon H4350	31.7	2,025	32.6	2,075	33.5	2,130	34.3	2,175	35.2	2,230	44,400	105%
Alliant Power Pro 2000-MR	30.4	2,020	31.3	2,075	32.1	2,120	32.9	2,170	33.8	2,225	44,900	105%
Hodgdon CFE 223	29.9	2,030	30.7	2,075	31.6	2,130	32.4	2,175	33.2	2,225	45,000	100%
Hodgdon Varget	28.5	2,030	29.3	2,080	30.1	2,130	30.9	2,180	31.7	2,225	44,800	97%
Reload Swiss RS52	29.2	2,030	30.0	2,080	30.8	2,130	31.6	2,175	32.4	2,225	44,700	101%
Winchester 748	29.1	2,020	29.9	2,070	30.7	2,115	31.5	2,165	32.3	2,215	44,900	98%
Accurate 2520	28.5	2,005	29.3	2,055	30.1	2,100	30.9	2,150	31.7	2,195	44,800	96%
IMR 4895	27.8	2,000	28.6	2,050	29.4	2,095	30.1	2,140	30.9	2,190	45,000	94%
Winchester 760	31.1	1,980	32.0	2,030	32.8	2,080	33.6	2,125	34.5	2,180	44,200	105%
Hodgdon H380	30.1	1,985	30.9	2,030	31.8	2,080	32.6	2,130	33.4	2,175	43,000	105%
IMR 4064	27.7	1,985	28.5	2,035	29.3	2,085	30.0	2,125	30.8	2,175	44,900	97%
Hodgdon H4895	26.9	1,975	27.6	2,020	28.4	2,065	29.1	2,110	29.9	2,160	44,800	91%
Accurate 2460	27.1	1,960	27.9	2,005	28.6	2,050	29.4	2,095	30.1	2,140	44,700	89%
Alliant Power Pro Varmint	27.3	1,955	28.1	2,005	28.8	2,045	29.6	2,095	30.3	2,135	44,900	95%
IMR 4451	30.7	1,930	31.6	1,985	32.4	2,030	33.3	2,085	34.1	2,135	44,600	105%
Alliant Reloder 15	27.4	1,945	28.1	1,985	28.9	2,035	29.6	2,075	30.4	2,125	44,700	96%
Hodgdon H335	26.6	1,925	27.4	1,975	28.1	2,015	28.9	2,065	29.6	2,110	44,900	86%

7mm BR Remington

Remington introduced the 7mm BR Remington in 1978 for the unlimited class of metallic silhouette competition. It was chambered in Remington's XP-100 single-shot bolt-action pistol. Later it appeared in the Model 40-XB single-shot target rifle. The cartridge was formed by necking up the 6mm BR Remington case to accept .284-inch bullets. Like its parent it uses a small rifle primer.

In silhouette shooting the 7mm BR could drive relatively heavy bullets from a handgun with manageable recoil. This made it effective against the steel targets used at longer distances. It was later used in benchrest competition as well. Hunters have used it on smaller deer at ranges under about 150 yards. With lighter bullets it has also served for varmints and predators. Remington produced ammunition and cases until the early 1990s. The company no longer makes firearms in the caliber. Peterson Cartridge began producing brass in 2020. Small specialty firms offer loaded ammunition.

Cartridge specifications	
Bullet Diameter	**0.284" (7.21 mm)**
Max Case Length	**1.520" (38.61 mm)**
Case Trim Length	**1.510" (38.36 mm)**
Max COAL	**2.143" (54.42 mm)**
Primer Pocket	**Small Rifle**
Standard Twist	**1:10"**
Case Capacity	**36.5 gr H_2O**
Max Pressure	**4,050 bar / 58,740 psi (C.I.P.)**

100 gr Bullet · 25" barrel

COAL: 2.120" • Bullet length: 0.884" • Seat depth: 0.284" • Usable capacity: 32.0 / 36.5 gr H_2O

Powder	STEP 1 · 90%		STEP 2		STEP 3		STEP 4		STEP 5 · LIMIT			
	gr	fps	gr	fps	gr	fps	gr	fps	gr	fps	psi	Fill
Hodgdon CFE BLK	29.3	2,835	30.1	2,900	31.0	2,970	31.8	3,035	32.6	3,100	56,900	105%
Shooters World SBR-SOCOM	25.7	2,830	26.4	2,890	27.1	2,950	27.8	3,010	28.5	3,070	58,400	92%
Alliant Power Pro 1200-R	29.6	2,730	30.4	2,790	31.3	2,860	32.1	2,925	32.9	2,985	55,300	105%
Norma R123	21.3	2,760	21.9	2,820	22.5	2,875	23.1	2,930	23.7	2,985	58,600	80%
Alliant Power Pro 300-MP	23.7	2,755	24.4	2,820	25.0	2,870	25.6	2,920	26.3	2,980	58,600	91%
Accurate 1680	27.5	2,730	28.3	2,795	29.0	2,850	29.8	2,915	30.5	2,970	58,400	98%
Alliant Reloder 7	28.1	2,725	28.9	2,785	29.6	2,840	30.4	2,905	31.2	2,970	58,500	104%
Accurate LT-30	27.9	2,645	28.7	2,710	29.4	2,765	30.2	2,825	31.0	2,890	58,300	97%
Vihtavuori N120	25.4	2,665	26.1	2,720	26.8	2,775	27.5	2,835	28.2	2,890	58,600	102%
Vihtavuori N110	20.2	2,570	20.8	2,625	21.3	2,670	21.8	2,715	22.4	2,770	58,400	82%
Hodgdon H4227	20.8	2,465	21.4	2,520	22.0	2,570	22.5	2,615	23.1	2,665	58,500	83%

120 gr Bullet · 25" barrel

COAL: 2.143" • Bullet length: 1.034" • Seat depth: 0.412" • Usable capacity: 30.1 / 36.5 gr H_2O

Powder	STEP 1 · 90%		STEP 2		STEP 3		STEP 4		STEP 5 · LIMIT			
	gr	fps	gr	fps	gr	fps	gr	fps	gr	fps	psi	Fill
Hodgdon CFE BLK	27.3	2,550	28.1	2,615	28.8	2,665	29.6	2,730	30.3	2,785	58,300	104%
Alliant Power Pro 1200-R	27.7	2,495	28.5	2,555	29.3	2,615	30.0	2,670	30.8	2,730	58,200	104%
Shooters World SBR-SOCOM	23.4	2,500	24.0	2,550	24.7	2,610	25.4	2,670	26.0	2,720	58,600	89%
Shooters World AR Plus	28.0	2,440	28.8	2,500	29.6	2,560	30.3	2,610	31.1	2,670	56,200	105%
Accurate 1680	25.3	2,425	26.0	2,480	26.7	2,535	27.4	2,590	28.1	2,645	58,700	96%
Alliant Reloder 7	25.7	2,425	26.4	2,480	27.1	2,535	27.8	2,590	28.5	2,645	58,300	101%
Alliant Power Pro 300-MP	21.5	2,420	22.1	2,470	22.7	2,525	23.3	2,575	23.9	2,625	58,600	88%
Hodgdon H4198	24.8	2,400	25.5	2,455	26.1	2,500	26.8	2,560	27.5	2,615	56,800	105%
Accurate 2015	27.4	2,380	28.1	2,435	28.9	2,495	29.6	2,550	30.4	2,610	56,800	105%
Hodgdon H335	28.7	2,360	29.5	2,420	30.3	2,475	31.1	2,535	31.9	2,595	55,800	105%
Accurate LT-30	25.7	2,360	26.4	2,415	27.1	2,470	27.9	2,530	28.6	2,585	58,600	96%
Vihtavuori N120	23.2	2,350	23.9	2,405	24.5	2,455	25.1	2,505	25.8	2,560	58,600	100%

130 gr Bullet · 25" barrel

COAL: 2.143" • Bullet length: 1.116" • Seat depth: 0.494" • Usable capacity: 29.0 / 36.5 gr H_2O

Powder	STEP 1 · 90%		STEP 2		STEP 3		STEP 4		STEP 5 · LIMIT			
	gr	fps	gr	fps	gr	fps	gr	fps	gr	fps	psi	Fill
Hodgdon CFE BLK	26.1	2,415	26.8	2,470	27.6	2,530	28.3	2,585	29.0	2,640	58,200	103%
Alliant Power Pro 1200-R	26.6	2,380	27.3	2,435	28.1	2,495	28.8	2,545	29.5	2,600	58,400	104%
Shooters World SBR-SOCOM	22.2	2,355	22.8	2,405	23.4	2,455	24.1	2,515	24.7	2,565	58,200	88%
Shooters World AR Plus	27.0	2,335	27.8	2,390	28.5	2,445	29.3	2,505	30.0	2,555	57,100	105%
Alliant Reloder 7	24.5	2,300	25.2	2,350	25.9	2,405	26.5	2,450	27.2	2,505	58,200	100%
Accurate 1680	24.1	2,290	24.8	2,345	25.5	2,400	26.1	2,445	26.8	2,500	58,200	95%
Accurate 2015	26.4	2,280	27.1	2,330	27.9	2,390	28.6	2,440	29.3	2,495	57,600	105%
Hodgdon H4198	23.9	2,290	24.5	2,340	25.2	2,395	25.9	2,445	26.5	2,495	58,000	105%
Hodgdon H335	27.6	2,260	28.4	2,315	29.1	2,365	29.9	2,425	30.7	2,480	56,300	105%
Alliant Power Pro 300-MP	20.4	2,280	21.0	2,330	21.5	2,370	22.1	2,425	22.7	2,475	58,200	87%
Accurate LT-30	24.7	2,250	25.4	2,300	26.0	2,350	26.7	2,400	27.4	2,455	58,700	95%
Vihtavuori N120	22.1	2,220	22.7	2,270	23.4	2,325	24.0	2,370	24.6	2,420	58,400	99%

140 gr Bullet · 25" barrel

COAL: 2.143" • Bullet length: 1.172" • Seat depth: 0.550" • Usable capacity: 28.1 / 36.5 gr H_2O

Powder	STEP 1 · 90%		STEP 2		STEP 3		STEP 4		STEP 5 · LIMIT			
	gr	fps	gr	fps	gr	fps	gr	fps	gr	fps	psi	Fill
Hodgdon CFE BLK	25.2	2,305	25.9	2,355	26.6	2,410	27.3	2,465	28.0	2,515	58,600	102%
Alliant Power Pro 1200-R	25.6	2,270	26.3	2,325	27.0	2,375	27.7	2,430	28.4	2,480	58,500	103%
Shooters World AR Plus	26.2	2,235	26.9	2,290	27.6	2,340	28.4	2,400	29.1	2,450	58,100	105%
Norma 200	24.5	2,240	25.2	2,295	25.9	2,345	26.5	2,390	27.2	2,445	56,300	105%
Shooters World SBR-SOCOM	21.3	2,235	21.9	2,285	22.5	2,335	23.1	2,385	23.7	2,435	58,400	87%
Accurate 2015	25.6	2,185	26.3	2,235	27.0	2,290	27.7	2,340	28.4	2,390	58,300	105%
Hodgdon H335	26.8	2,170	27.6	2,230	28.3	2,280	29.1	2,335	29.8	2,385	57,300	105%
Ramshot X-Terminator	26.2	2,180	26.9	2,230	27.6	2,280	28.4	2,335	29.1	2,385	55,600	105%
Alliant Reloder 7	23.5	2,180	24.1	2,230	24.8	2,280	25.5	2,335	26.1	2,380	58,200	99%
Accurate 1680	23.2	2,175	23.9	2,230	24.5	2,275	25.1	2,320	25.8	2,375	58,300	94%
Hodgdon H4198	23.0	2,180	23.6	2,225	24.3	2,280	24.9	2,325	25.5	2,370	58,100	104%
Alliant Power Pro 300-MP	19.6	2,160	20.2	2,210	20.7	2,255	21.3	2,305	21.8	2,345	58,600	86%
Accurate LT-30	23.7	2,135	24.4	2,185	25.0	2,230	25.6	2,275	26.3	2,330	58,200	94%
IMR 4198	22.1	2,105	22.7	2,150	23.3	2,200	23.9	2,245	24.5	2,290	56,200	105%
Vihtavuori N120	21.2	2,100	21.8	2,150	22.4	2,195	23.0	2,245	23.6	2,290	58,400	97%

150 gr Bullet · 25" barrel

COAL: 2.143" • Bullet length: 1.229" • Seat depth: 0.607" • Usable capacity: 27.4 / 36.5 gr H_2O

Powder	STEP 1 · 90%		STEP 2		STEP 3		STEP 4		STEP 5 · LIMIT			
	gr	fps	gr	fps	gr	fps	gr	fps	gr	fps	psi	Fill
Hodgdon CFE BLK	24.3	2,190	25.0	2,245	25.6	2,290	26.3	2,345	27.0	2,395	58,400	101%
Alliant Power Pro 1200-R	24.7	2,170	25.4	2,225	26.0	2,270	26.7	2,320	27.4	2,370	58,700	102%
Norma 200	23.9	2,165	24.5	2,210	25.2	2,260	25.9	2,315	26.5	2,360	58,200	105%
Shooters World AR Plus	25.4	2,145	26.1	2,195	26.8	2,245	27.5	2,295	28.2	2,350	58,400	104%
Shooters World SBR-SOCOM	20.5	2,125	21.1	2,175	21.6	2,215	22.2	2,265	22.8	2,315	58,600	86%
Hodgdon H335	26.1	2,095	26.8	2,145	27.6	2,200	28.3	2,250	29.0	2,300	58,300	105%
Ramshot X-Terminator	25.6	2,105	26.3	2,155	27.0	2,205	27.7	2,250	28.4	2,300	58,000	105%
Accurate 2015	24.8	2,090	25.5	2,145	26.1	2,185	26.8	2,240	27.5	2,290	58,500	104%
Alliant Reloder 7	22.7	2,085	23.3	2,130	23.9	2,175	24.6	2,225	25.2	2,270	58,700	98%
Accurate 1680	22.4	2,070	23.0	2,120	23.6	2,165	24.3	2,215	24.9	2,260	58,400	94%
Hodgdon H4198	22.1	2,070	22.7	2,115	23.4	2,170	24.0	2,215	24.6	2,260	58,300	103%
Accurate LT-30	22.9	2,035	23.5	2,080	24.1	2,125	24.8	2,175	25.4	2,220	58,300	93%
Alliant Power Pro 300-MP	18.8	2,045	19.3	2,090	19.9	2,140	20.4	2,180	20.9	2,220	58,500	85%
IMR 4198	21.5	2,020	22.1	2,065	22.7	2,110	23.3	2,160	23.9	2,205	58,300	105%
Vihtavuori N120	20.4	1,995	21.0	2,045	21.5	2,080	22.1	2,130	22.7	2,175	58,400	96%

160 gr Bullet · 25" barrel

COAL: 2.143" • Bullet length: 1.431" • Seat depth: 0.809" • Usable capacity: 24.8 / 36.5 gr H_2O

Powder	STEP 1 · 90%		STEP 2		STEP 3		STEP 4		STEP 5 · LIMIT			
	gr	fps	gr	fps	gr	fps	gr	fps	gr	fps	psi	Fill
Hodgdon CFE BLK	22.5	2,050	23.1	2,095	23.8	2,150	24.4	2,195	25.0	2,245	58,700	104%
Alliant Power Pro 1200-R	22.8	2,025	23.4	2,070	24.1	2,125	24.7	2,170	25.3	2,215	58,500	104%
Norma 200	21.6	1,980	22.2	2,030	22.8	2,075	23.4	2,125	24.0	2,170	55,300	105%
Shooters World AR Plus	23.1	1,970	23.8	2,025	24.4	2,070	25.1	2,120	25.7	2,165	56,200	105%
Shooters World SBR-SOCOM	19.0	1,990	19.5	2,030	20.1	2,080	20.6	2,125	21.1	2,165	58,700	87%
Accurate 2015	22.6	1,925	23.2	1,970	23.9	2,025	24.5	2,070	25.1	2,115	56,800	105%
Alliant Reloder 7	20.9	1,935	21.5	1,985	22.0	2,025	22.6	2,070	23.2	2,115	58,400	99%
Accurate 1680	20.7	1,930	21.3	1,975	21.9	2,025	22.4	2,065	23.0	2,110	58,100	95%
Hodgdon H335	23.7	1,920	24.4	1,970	25.0	2,015	25.6	2,060	26.3	2,110	55,400	105%
Hodgdon H4198	20.4	1,930	21.0	1,975	21.5	2,015	22.1	2,065	22.7	2,110	58,400	105%
Alliant Power Pro 300-MP	17.5	1,915	18.0	1,960	18.4	1,995	18.9	2,040	19.4	2,080	58,600	87%
Accurate LT-30	21.2	1,900	21.8	1,945	22.4	1,990	22.9	2,030	23.5	2,075	58,700	95%
Vihtavuori N120	18.8	1,855	19.3	1,895	19.9	1,945	20.4	1,985	20.9	2,025	58,100	98%
IMR 4198	19.4	1,845	19.9	1,885	20.5	1,935	21.1	1,980	21.6	2,020	55,700	105%

175 gr Bullet · 25" barrel

COAL: 2.143" • Bullet length: 1.428" • Seat depth: 0.806" • Usable capacity: 24.5 / 36.5 gr H_2O

Powder	STEP 1 · 90%		STEP 2		STEP 3		STEP 4		STEP 5 · LIMIT			
	gr	fps	gr	fps	gr	fps	gr	fps	gr	fps	psi	Fill
Hodgdon CFE BLK	21.8	1,930	22.4	1,975	23.0	2,025	23.6	2,070	24.2	2,115	58,700	102%
Alliant Power Pro 1200-R	22.0	1,910	22.6	1,955	23.2	2,000	23.8	2,045	24.4	2,090	58,400	101%
Norma 200	21.2	1,900	21.8	1,945	22.4	1,995	23.0	2,040	23.6	2,085	58,500	104%
Shooters World AR Plus	22.8	1,895	23.4	1,940	24.1	1,990	24.7	2,035	25.3	2,080	58,500	104%
Hodgdon H335	23.4	1,855	24.0	1,895	24.7	1,945	25.4	1,995	26.0	2,040	58,200	105%
Ramshot X-Terminator	22.8	1,850	23.4	1,890	24.1	1,940	24.7	1,985	25.3	2,025	58,500	104%
Shooters World SBR-SOCOM	18.2	1,855	18.7	1,900	19.2	1,940	19.7	1,985	20.2	2,025	58,400	85%
Accurate 2015	22.1	1,835	22.7	1,880	23.4	1,935	24.0	1,980	24.6	2,020	58,200	104%
Accurate 2230	22.9	1,845	23.5	1,885	24.1	1,930	24.8	1,980	25.4	2,020	56,000	105%
Accurate 1680	20.1	1,820	20.7	1,870	21.2	1,905	21.8	1,950	22.3	1,990	58,700	94%
Alliant Reloder 7	20.1	1,820	20.7	1,865	21.2	1,905	21.8	1,950	22.3	1,985	58,100	97%
Hodgdon H4198	19.7	1,815	20.3	1,860	20.8	1,900	21.3	1,940	21.9	1,985	58,300	102%
Accurate LT-30	20.4	1,780	21.0	1,825	21.5	1,865	22.1	1,910	22.7	1,955	58,400	93%
Alliant Power Pro 300-MP	16.7	1,780	17.1	1,815	17.6	1,860	18.1	1,905	18.5	1,935	58,300	84%
IMR 4198	19.1	1,765	19.6	1,805	20.1	1,840	20.7	1,890	21.2	1,925	58,500	104%
Vihtavuori N120	18.2	1,745	18.7	1,785	19.2	1,825	19.7	1,865	20.2	1,905	58,600	96%

7mm PRC

Hornady introduced the 7mm Precision Rifle Cartridge (PRC) in 2022. SAAMI had approved the cartridge earlier that year. It was created by necking down the 300 PRC case to hold .284-inch bullets. The 300 PRC itself derives from the .375 Ruger. The unbelted case has a 30-degree shoulder and fits standard long-action rifles. A 1:8-inch twist and minimal freebore suit it to long high-ballistic-coefficient bullets.

Hornady's initial factory loads included a 175-grain ELD-X Precision Hunter load at about 3,000 fps, a 180-grain ELD Match load and a 160-grain CX Outfitter load. The cartridge is intended for long-range target shooting and for big-game hunting. Its intended game includes elk, moose and bear. Recoil is lighter than that of comparable .30-caliber magnums.

Cartridge specifications	
Bullet Diameter	**0.284" (7.21 mm)**
Max Case Length	**2.280" (57.91 mm)**
Case Trim Length	**2.270" (57.66 mm)**
Max COAL	**3.340" (84.84 mm)**
Primer Pocket	**Large Rifle**
Standard Twist	**1:8"**
Case Capacity	**81.8 gr H_2O**
Max Pressure	**65,000 psi (SAAMI)**

139 gr Bullet · 25" barrel

COAL: 3.070" • Bullet length: 1.277" • Seat depth: 0.487" • Usable capacity: 74.3 / 81.8 gr H_2O

Powder	STEP 1 · 90%		STEP 2		STEP 3		STEP 4		STEP 5 · LIMIT			
	gr	fps	gr	fps	gr	fps	gr	fps	gr	fps	psi	Fill
Vihtavuori N565	66.5	3,075	68.3	3,150	70.2	3,225	72.1	3,305	73.9	3,385	64,900	104%
Ramshot Grand	67.8	3,065	69.7	3,140	71.5	3,220	73.4	3,300	75.3	3,380	64,900	103%
Alliant Reloder 26	63.6	3,060	65.4	3,135	67.2	3,210	68.9	3,285	70.7	3,360	65,000	96%
Vihtavuori N570	68.2	3,035	70.1	3,115	72.0	3,195	73.9	3,275	75.8	3,360	64,400	105%
Hodgdon Retumbo	67.1	3,020	68.9	3,095	70.8	3,175	72.7	3,250	74.5	3,330	64,800	104%
Alliant Reloder 23	60.6	3,045	62.3	3,115	64.0	3,185	65.6	3,255	67.3	3,325	64,900	98%
Hodgdon SUPERFORMANCE	60.0	3,040	61.7	3,110	63.4	3,185	65.0	3,250	66.7	3,325	65,000	88%
Accurate MagPro	66.1	3,000	67.9	3,075	69.8	3,155	71.6	3,230	73.4	3,310	64,900	101%
Vihtavuori N560	62.5	3,035	64.2	3,100	66.0	3,170	67.7	3,240	69.4	3,310	64,800	98%
Ramshot Magnum	67.7	2,980	69.6	3,060	71.5	3,140	73.3	3,215	75.2	3,295	64,800	101%
Reload Swiss RS70	60.9	3,005	62.6	3,080	64.3	3,150	66.0	3,225	67.7	3,295	64,900	92%
Alliant Reloder 19	60.0	2,995	61.7	3,070	63.4	3,145	65.0	3,215	66.7	3,290	64,800	95%
Vihtavuori N165	62.7	3,000	64.5	3,075	66.2	3,140	68.0	3,215	69.7	3,285	64,900	101%
Alliant Reloder 25	64.4	2,980	66.2	3,055	68.0	3,135	69.7	3,205	71.5	3,280	63,200	105%
Hodgdon H1000	64.7	2,970	66.5	3,045	68.3	3,120	70.1	3,195	71.9	3,275	65,000	105%
Alliant Reloder 22	60.4	2,985	62.1	3,055	63.8	3,130	65.4	3,195	67.1	3,270	65,000	96%
Winchester Supreme 780	63.3	2,970	65.0	3,045	66.8	3,120	68.5	3,190	70.3	3,265	64,900	95%
Norma MRP	60.8	2,975	62.5	3,045	64.2	3,120	65.9	3,190	67.6	3,260	64,800	95%
Reload Swiss RS76	66.2	2,960	68.0	3,030	69.9	3,105	71.8	3,185	73.6	3,255	64,900	100%
IMR 4350	56.3	2,970	57.8	3,035	59.4	3,100	61.0	3,170	62.5	3,235	65,000	90%

150 gr Bullet · 25" barrel

COAL: 2.970" • Bullet length: 1.355" • Seat depth: 0.665" • Usable capacity: 71.7 / 81.8 gr H_2O

Powder	STEP 1 · 90%		STEP 2		STEP 3		STEP 4		STEP 5 · LIMIT			
	gr	fps	gr	fps	gr	fps	gr	fps	gr	fps	psi	Fill
Vihtavuori N565	63.8	2,970	65.6	3,045	67.3	3,115	69.1	3,190	70.9	3,265	64,800	104%
Ramshot Grand	65.3	2,955	67.1	3,030	68.9	3,105	70.8	3,185	72.6	3,260	64,800	103%
Vihtavuori N570	65.8	2,955	67.6	3,030	69.4	3,105	71.3	3,185	73.1	3,260	64,600	105%
Alliant Reloder 26	61.2	2,955	62.9	3,025	64.6	3,095	66.3	3,165	68.0	3,240	64,900	95%
Hodgdon Retumbo	64.7	2,920	66.5	2,990	68.3	3,065	70.1	3,140	71.9	3,215	64,900	104%
Accurate MagPro	63.7	2,900	65.5	2,975	67.3	3,050	69.0	3,120	70.8	3,200	64,800	101%
Hodgdon SUPERFORMANCE	57.7	2,925	59.3	2,990	60.9	3,060	62.5	3,125	64.1	3,195	64,800	87%
IMR 4831	57.2	2,920	58.8	2,985	60.4	3,055	62.0	3,125	63.6	3,195	64,800	95%
Ramshot Magnum	65.3	2,890	67.1	2,960	68.9	3,035	70.8	3,115	72.6	3,190	65,000	102%
Reload Swiss RS70	58.7	2,900	60.3	2,970	62.0	3,040	63.6	3,110	65.2	3,180	65,000	92%
Vihtavuori N560	59.9	2,915	61.6	2,980	63.3	3,045	64.9	3,110	66.6	3,180	65,000	97%
Alliant Reloder 25	62.1	2,885	63.8	2,955	65.5	3,025	67.3	3,100	69.0	3,175	63,500	105%
Hodgdon H1000	62.3	2,870	64.0	2,940	65.8	3,015	67.5	3,085	69.2	3,160	64,800	105%
IMR 7828SSC	59.3	2,880	61.0	2,950	62.6	3,020	64.3	3,090	65.9	3,155	64,900	96%
Vihtavuori N165	60.2	2,885	61.9	2,955	63.6	3,020	65.2	3,085	66.9	3,155	65,000	100%
Winchester Supreme 780	60.9	2,870	62.6	2,940	64.3	3,015	66.0	3,085	67.7	3,155	65,000	95%
Reload Swiss RS76	63.8	2,855	65.6	2,925	67.3	2,995	69.1	3,065	70.9	3,140	64,900	100%
Vihtavuori N555	54.3	2,865	55.8	2,930	57.3	2,990	58.8	3,055	60.3	3,115	64,800	90%
Vihtavuori N568	64.8	2,805	66.6	2,880	68.4	2,955	70.2	3,035	72.0	3,115	64,800	104%
Hodgdon H4831SC	57.8	2,845	59.4	2,910	61.0	2,975	62.6	3,045	64.2	3,110	65,000	90%

160 gr Bullet · 25" barrel

COAL: 3.070" • Bullet length: 1.432" • Seat depth: 0.642" • Usable capacity: 72.0 / 81.8 gr H_2O

Powder	STEP 1 · 90%		STEP 2		STEP 3		STEP 4		STEP 5 · LIMIT			
	gr	fps	gr	fps	gr	fps	gr	fps	gr	fps	psi	Fill
Vihtavuori N570	64.8	2,895	66.6	2,965	68.4	3,040	70.2	3,115	72.0	3,190	64,800	103%
Ramshot Grand	64.7	2,885	66.5	2,960	68.3	3,030	70.1	3,105	71.9	3,180	64,800	102%
Vihtavuori N565	62.2	2,885	63.9	2,950	65.7	3,020	67.4	3,090	69.1	3,160	64,800	101%
Alliant Reloder 26	60.3	2,875	62.0	2,940	63.6	3,005	65.3	3,075	67.0	3,150	64,900	93%
Hodgdon Retumbo	63.9	2,845	65.7	2,920	67.5	2,990	69.2	3,055	71.0	3,130	64,800	103%
Accurate MagPro	63.1	2,840	64.8	2,905	66.6	2,980	68.3	3,050	70.1	3,125	64,800	99%
Alliant Reloder 25	61.9	2,835	63.6	2,905	65.3	2,975	67.1	3,050	68.8	3,120	64,900	104%
Ramshot Magnum	64.6	2,825	66.4	2,900	68.2	2,970	70.0	3,045	71.8	3,120	64,900	100%
Winchester StaBALL HD	65.1	2,815	66.9	2,885	68.7	2,955	70.5	3,030	72.3	3,100	64,700	102%
Alliant Reloder 23	57.2	2,835	58.8	2,900	60.4	2,965	62.0	3,030	63.6	3,095	64,800	96%
Hodgdon H1000	61.6	2,805	63.3	2,870	65.0	2,940	66.7	3,010	68.4	3,080	65,000	103%
IMR 7828SSC	58.3	2,800	59.9	2,865	61.5	2,930	63.2	3,000	64.8	3,065	65,000	94%
Alliant Reloder 22	57.2	2,800	58.8	2,865	60.4	2,930	61.9	2,990	63.5	3,055	64,800	94%
Reload Swiss RS76	63.0	2,780	64.8	2,845	66.5	2,915	68.3	2,985	70.0	3,050	64,800	98%
Norma MRP	57.6	2,785	59.2	2,850	60.8	2,915	62.4	2,980	64.0	3,045	64,800	92%
Ramshot Hunter	55.3	2,785	56.8	2,845	58.3	2,905	59.9	2,970	61.4	3,030	64,900	91%
IMR 7828	58.1	2,770	59.7	2,835	61.3	2,895	62.9	2,960	64.5	3,025	64,900	90%
Accurate 3100	56.8	2,755	58.4	2,820	60.0	2,890	61.5	2,950	63.1	3,015	64,900	95%
Vihtavuori N170	61.8	2,760	63.5	2,820	65.3	2,890	67.0	2,950	68.7	3,015	64,800	99%
IMR 7977	60.4	2,725	62.1	2,795	63.8	2,865	65.4	2,930	67.1	3,000	64,800	101%

175 gr Bullet · 25" barrel

COAL: 3.180" • Bullet length: 1.477" • Seat depth: 0.577" • Usable capacity: 73.1 / 81.8 gr H_2O

Powder	STEP 1 · 90%		STEP 2		STEP 3		STEP 4		STEP 5 · LIMIT			
	gr	fps	gr	fps	gr	fps	gr	fps	gr	fps	psi	Fill
Ramshot Grand	64.2	2,795	66.0	2,865	67.8	2,935	69.5	3,000	71.3	3,075	64,800	99%
Vihtavuori N570	63.5	2,800	65.3	2,870	67.0	2,935	68.8	3,005	70.5	3,075	64,900	99%
Accurate MagPro	62.6	2,755	64.3	2,820	66.0	2,890	67.8	2,960	69.5	3,025	64,900	97%
Alliant Reloder 26	59.2	2,760	60.9	2,825	62.5	2,890	64.2	2,955	65.8	3,020	64,900	90%
Hodgdon Retumbo	63.1	2,750	64.8	2,815	66.6	2,880	68.3	2,945	70.1	3,015	64,900	100%
Ramshot Magnum	63.9	2,740	65.7	2,810	67.5	2,880	69.2	2,945	71.0	3,015	64,800	97%
Vihtavuori N565	60.2	2,755	61.9	2,820	63.6	2,885	65.2	2,950	66.9	3,015	64,900	96%
Alliant Reloder 25	61.3	2,745	63.0	2,810	64.7	2,875	66.4	2,945	68.1	3,010	64,900	102%
Vihtavuori N568	63.5	2,710	65.3	2,780	67.0	2,845	68.8	2,920	70.6	2,995	65,000	100%
Winchester StaBALL HD	64.4	2,725	66.2	2,790	68.0	2,860	69.7	2,925	71.5	2,995	64,900	100%
Hodgdon H1000	60.8	2,705	62.5	2,775	64.2	2,840	65.8	2,900	67.5	2,965	65,000	100%
Alliant Reloder 23	56.2	2,715	57.8	2,775	59.3	2,835	60.9	2,900	62.4	2,960	65,000	93%
Winchester Supreme 780	59.0	2,700	60.6	2,760	62.3	2,825	63.9	2,890	65.5	2,950	64,900	90%
IMR 7828SSC	57.2	2,690	58.8	2,750	60.4	2,815	61.9	2,870	63.5	2,935	64,900	90%
Alliant Reloder 22	56.2	2,685	57.8	2,750	59.3	2,810	60.9	2,870	62.4	2,930	64,900	91%
IMR 8133	62.4	2,660	64.1	2,725	65.8	2,790	67.6	2,860	69.3	2,925	64,800	99%
Vihtavuori N165	57.8	2,670	59.4	2,730	61.0	2,790	62.6	2,850	64.2	2,910	64,900	94%
Vihtavuori N560	56.8	2,675	58.4	2,730	60.0	2,790	61.5	2,850	63.1	2,905	64,800	90%
Accurate 3100	55.8	2,650	57.3	2,710	58.9	2,770	60.5	2,835	62.0	2,895	64,900	92%
IMR 7977	59.8	2,640	61.5	2,705	63.1	2,770	64.8	2,835	66.4	2,895	65,000	99%

190 gr Bullet · 25" barrel

COAL: 3.320" • Bullet length: 1.629" • Seat depth: 0.589" • Usable capacity: 72.9 / 81.8 gr H_2O

Powder	STEP 1 · 90%		STEP 2		STEP 3		STEP 4		STEP 5 · LIMIT			
	gr	fps	gr	fps	gr	fps	gr	fps	gr	fps	psi	Fill
Ramshot Grand	62.9	2,690	64.7	2,760	66.4	2,825	68.2	2,890	69.9	2,960	64,800	98%
Vihtavuori N570	61.4	2,690	63.1	2,750	64.8	2,815	66.5	2,880	68.2	2,945	65,000	96%
Accurate MagPro	61.4	2,660	63.1	2,725	64.8	2,790	66.5	2,855	68.2	2,925	65,000	95%
Ramshot Magnum	62.6	2,650	64.3	2,715	66.0	2,780	67.8	2,845	69.5	2,910	64,800	96%
Vihtavuori N568	62.2	2,635	63.9	2,700	65.7	2,770	67.4	2,835	69.1	2,905	65,000	98%
Hodgdon Retumbo	61.7	2,645	63.4	2,710	65.1	2,770	66.8	2,835	68.5	2,900	64,900	98%
Alliant Reloder 25	59.9	2,640	61.6	2,705	63.3	2,770	64.9	2,830	66.6	2,895	64,800	100%
Alliant Reloder 26	57.5	2,640	59.1	2,700	60.7	2,765	62.3	2,825	63.9	2,885	64,800	88%
Winchester StaBALL HD	62.9	2,620	64.7	2,685	66.4	2,750	68.2	2,815	69.9	2,880	64,800	98%
Vihtavuori N565	57.9	2,635	59.5	2,695	61.1	2,750	62.7	2,810	64.3	2,870	64,800	93%
Hodgdon H1000	59.3	2,600	61.0	2,665	62.6	2,725	64.3	2,790	65.9	2,850	64,900	98%
Hodgdon H50BMG	67.4	2,565	69.3	2,630	71.2	2,695	73.0	2,760	74.9	2,830	64,800	105%
IMR 8133	61.2	2,570	62.9	2,635	64.6	2,695	66.3	2,760	68.0	2,825	65,000	97%
Alliant Reloder 23	54.5	2,590	56.0	2,645	57.5	2,705	59.0	2,760	60.5	2,820	64,900	90%
Hodgdon SUPERFORMANCE	54.0	2,585	55.5	2,640	57.0	2,700	58.5	2,760	60.0	2,820	64,800	81%
Reload Swiss RS76	60.8	2,570	62.5	2,630	64.2	2,695	65.9	2,755	67.6	2,815	64,900	93%
IMR 7828SSC	55.5	2,570	57.0	2,630	58.6	2,690	60.2	2,750	61.7	2,805	64,800	88%
Accurate 4350	52.0	2,560	53.5	2,620	54.9	2,670	56.3	2,725	57.8	2,785	64,900	83%
IMR 7977	58.4	2,540	60.0	2,600	61.7	2,665	63.3	2,725	64.9	2,785	64,900	97%
Vihtavuori N560	54.8	2,545	56.3	2,595	57.8	2,650	59.4	2,710	60.9	2,765	64,800	87%

7mm Remington Magnum

Remington introduced the 7mm Remington Magnum in 1962 together with its new Model 700 bolt-action rifle. Hunting editor and outfitter Les Bowman was primarily responsible for its development. He had sought a cartridge with less recoil than the .300 Weatherby Magnum. It still had to carry enough energy for elk at long range. The 7mm Remington Magnum belongs to the belted magnum family derived from the .375 H&H Magnum. It is closely related to the .264, .338 and .458 Winchester Magnums. All of them are shortened to fit a standard-length action.

Nosler's Trophy Grade load drives a 160-grain Partition bullet at about 2,950 fps. Factory loads with 175-grain bullets are offered at about 2,860 fps. With comparable bullet weights the cartridge outperforms the .30-06 Springfield in trajectory. Its introduction sharply reduced sales of the .264 Winchester Magnum. Together with the .300 Winchester Magnum it has remained one of the most popular magnum cartridges among hunters. It is used on deer, elk and other big game. Rifles and factory ammunition are widely available.

Cartridge specifications	
Bullet Diameter	**0.284" (7.21 mm)**
Max Case Length	**2.500" (63.50 mm)**
Case Trim Length	**2.490" (63.25 mm)**
Max COAL	**3.290" (83.57 mm)**
Primer Pocket	**Large Rifle**
Standard Twist	**1:9"**
Case Capacity	**83.6 gr H_2O**
Max Pressure	**61,000 psi (SAAMI)**

120 gr Bullet · 25" barrel

COAL: 3.150" • Bullet length: 1.115" • Seat depth: 0.465" • Usable capacity: 76.4 / 83.6 gr H_2O

Powder	STEP 1 · 90%		STEP 2		STEP 3		STEP 4		STEP 5 · LIMIT			
	gr	fps	gr	fps	gr	fps	gr	fps	gr	fps	psi	Fill
Alliant Reloder 23	65.8	3,245	67.6	3,320	69.4	3,400	71.3	3,480	73.1	3,560	61,000	104%
Alliant Reloder 26	67.9	3,200	69.8	3,280	71.7	3,365	73.5	3,440	75.4	3,525	61,000	99%
Ramshot Grand	70.8	3,145	72.8	3,230	74.8	3,315	76.7	3,400	78.7	3,485	57,500	105%
Hodgdon SUPERFORMANCE	63.6	3,175	65.4	3,250	67.2	3,325	68.9	3,400	70.7	3,480	60,800	91%
IMR 7828SSC	66.6	3,145	68.4	3,220	70.3	3,305	72.2	3,385	74.0	3,465	60,900	101%
Reload Swiss RS76	71.5	3,140	73.5	3,220	75.5	3,300	77.4	3,380	79.4	3,465	61,000	105%
Vihtavuori N560	66.5	3,165	68.3	3,240	70.2	3,315	72.1	3,395	73.9	3,465	60,800	101%
Alliant Reloder 22	65.1	3,145	66.9	3,225	68.7	3,300	70.5	3,380	72.3	3,460	61,000	101%
IMR 4350	61.0	3,155	62.7	3,230	64.4	3,305	66.1	3,375	67.8	3,450	60,900	95%
Accurate 4350	60.9	3,145	62.6	3,215	64.3	3,290	66.0	3,360	67.7	3,435	60,900	93%
Hodgdon H4831SC	64.8	3,125	66.6	3,200	68.4	3,275	70.2	3,355	72.0	3,430	60,800	95%
Alliant Reloder 19	63.6	3,115	65.4	3,190	67.2	3,270	68.9	3,345	70.7	3,425	61,000	98%
IMR 4831	61.6	3,095	63.3	3,170	65.0	3,245	66.7	3,320	68.4	3,400	60,900	96%
Accurate MagPro	68.8	3,060	70.7	3,140	72.6	3,220	74.5	3,305	76.4	3,385	60,800	102%
Hodgdon H4831	64.4	3,075	66.2	3,150	68.0	3,230	69.7	3,300	71.5	3,380	60,800	100%
Norma 204	60.6	3,095	62.3	3,165	64.0	3,240	65.6	3,310	67.3	3,380	61,000	93%
Vihtavuori N170	69.0	3,080	70.9	3,150	72.8	3,225	74.8	3,305	76.7	3,380	60,900	104%
Ramshot Magnum	70.7	3,045	72.7	3,125	74.7	3,210	76.6	3,290	78.6	3,375	60,900	103%
Winchester StaBALL HD	70.8	3,035	72.8	3,115	74.8	3,200	76.7	3,280	78.7	3,365	57,700	105%
Hodgdon H414	57.7	3,045	59.3	3,115	60.9	3,185	62.5	3,250	64.1	3,320	60,900	85%

130 gr Bullet · 25" barrel

COAL: 3.185" • Bullet length: 1.100" • Seat depth: 0.415" • Usable capacity: 77.3 / 83.6 gr H_2O

Powder	STEP 1 · 90%		STEP 2		STEP 3		STEP 4		STEP 5 · LIMIT			
	gr	fps	gr	fps	gr	fps	gr	fps	gr	fps	psi	Fill
Ramshot Grand	71.7	3,130	73.7	3,215	75.7	3,295	77.7	3,380	79.7	3,465	60,500	105%
Alliant Reloder 23	65.1	3,150	66.9	3,225	68.7	3,300	70.5	3,375	72.3	3,450	60,900	101%
Alliant Reloder 26	67.2	3,120	69.1	3,195	71.0	3,275	72.8	3,350	74.7	3,430	60,900	97%
Hodgdon SUPERFORMANCE	63.0	3,085	64.8	3,160	66.5	3,230	68.3	3,305	70.0	3,380	61,000	89%
Reload Swiss RS76	71.0	3,065	73.0	3,140	75.0	3,220	76.9	3,295	78.9	3,375	61,000	103%
Hodgdon Retumbo	70.2	3,055	72.2	3,135	74.1	3,210	76.0	3,290	78.0	3,370	59,800	105%
IMR 7828SSC	65.8	3,065	67.6	3,140	69.4	3,215	71.3	3,290	73.1	3,370	60,900	98%
Vihtavuori N565	68.5	3,045	70.4	3,125	72.3	3,200	74.2	3,280	76.1	3,360	60,900	103%
Reload Swiss RS62	62.2	3,065	63.9	3,135	65.7	3,210	67.4	3,285	69.1	3,355	61,000	93%
Alliant Reloder 19	63.1	3,040	64.8	3,115	66.6	3,190	68.3	3,260	70.1	3,340	60,800	96%
Vihtavuori N560	65.2	3,060	67.0	3,130	68.8	3,200	70.6	3,270	72.4	3,340	60,800	98%
IMR 4831	61.1	3,020	62.8	3,090	64.5	3,165	66.2	3,235	67.9	3,310	60,900	94%
Ramshot Magnum	70.4	2,995	72.4	3,070	74.3	3,150	76.3	3,230	78.2	3,310	61,000	101%
IMR 7828	65.2	3,005	67.0	3,080	68.8	3,155	70.6	3,230	72.4	3,305	61,000	94%
Vihtavuori N555	59.9	3,030	61.5	3,095	63.2	3,165	64.8	3,230	66.5	3,300	60,900	92%
Hodgdon H1000	67.3	2,985	69.2	3,060	71.0	3,135	72.9	3,215	74.8	3,290	58,200	105%
Hodgdon H4350	58.4	3,005	60.0	3,075	61.7	3,145	63.3	3,215	64.9	3,280	60,900	85%
Vihtavuori N170	68.0	2,985	69.9	3,055	71.8	3,125	73.6	3,190	75.5	3,265	60,900	102%
Alliant Reloder 16	57.5	3,000	59.1	3,065	60.7	3,130	62.3	3,195	63.9	3,260	60,900	92%
Vihtavuori N165	63.7	2,960	65.5	3,030	67.3	3,105	69.0	3,170	70.8	3,240	60,800	98%

140 gr Bullet · 25" barrel

COAL: 3.185" • Bullet length: 1.264" • Seat depth: 0.579" • Usable capacity: 74.9 / 83.6 gr H_2O

Powder	STEP 1 · 90%		STEP 2		STEP 3		STEP 4		STEP 5 · LIMIT			
	gr	fps	gr	fps	gr	fps	gr	fps	gr	fps	psi	Fill
Ramshot Grand	69.4	3,035	71.3	3,110	73.3	3,190	75.2	3,270	77.1	3,350	60,500	105%
Alliant Reloder 23	62.7	3,035	64.5	3,105	66.2	3,175	68.0	3,250	69.7	3,325	60,900	101%
Alliant Reloder 26	64.9	3,020	66.7	3,090	68.5	3,165	70.3	3,240	72.1	3,315	61,000	97%
Vihtavuori N570	68.7	2,965	70.6	3,040	72.5	3,120	74.4	3,200	76.3	3,275	60,500	105%
Hodgdon Retumbo	68.0	2,965	69.9	3,040	71.8	3,115	73.7	3,190	75.6	3,270	60,200	105%
Reload Swiss RS76	68.6	2,960	70.5	3,035	72.4	3,110	74.3	3,185	76.2	3,260	60,900	103%
Hodgdon SUPERFORMANCE	60.8	2,975	62.5	3,045	64.2	3,120	65.8	3,185	67.5	3,255	60,900	88%
IMR 7828SSC	63.4	2,965	65.2	3,035	66.9	3,105	68.7	3,180	70.4	3,250	60,900	98%
Alliant Reloder 19	60.9	2,945	62.6	3,015	64.3	3,085	66.0	3,155	67.7	3,230	60,900	96%
Reload Swiss RS70	61.7	2,945	63.4	3,015	65.2	3,090	66.9	3,160	68.6	3,230	61,000	92%
Norma MRP	62.3	2,945	64.0	3,015	65.8	3,085	67.5	3,155	69.2	3,225	60,800	96%
Accurate MagPro	66.2	2,910	68.0	2,985	69.9	3,060	71.8	3,140	73.6	3,215	60,900	100%
Vihtavuori N560	62.6	2,945	64.3	3,010	66.1	3,080	67.8	3,145	69.6	3,215	60,900	97%
Ramshot Magnum	68.0	2,900	69.9	2,975	71.8	3,055	73.7	3,130	75.6	3,210	61,000	101%
IMR 4350	57.8	2,940	59.4	3,005	61.0	3,070	62.6	3,135	64.2	3,205	60,900	92%
Hodgdon H1000	65.2	2,900	67.0	2,970	68.8	3,045	70.6	3,120	72.4	3,190	58,500	105%
Ramshot Hunter	58.7	2,905	60.3	2,970	62.0	3,040	63.6	3,105	65.2	3,170	60,800	92%
Hodgdon H4350	56.2	2,895	57.8	2,965	59.3	3,025	60.9	3,095	62.4	3,155	61,000	84%
Winchester Supreme 780	63.0	2,870	64.8	2,940	66.5	3,010	68.3	3,085	70.0	3,155	60,800	94%
Vihtavuori N170	65.3	2,865	67.1	2,935	68.9	3,000	70.8	3,070	72.6	3,140	60,900	101%

150 gr Bullet · 25" barrel

COAL: 3.240" • Bullet length: 1.325" • Seat depth: 0.584" • Usable capacity: 74.7 / 83.6 gr H_2O

Powder	STEP 1 · 90%		STEP 2		STEP 3		STEP 4		STEP 5 · LIMIT			
	gr	fps	gr	fps	gr	fps	gr	fps	gr	fps	psi	Fill
Ramshot Grand	68.6	2,960	70.5	3,035	72.4	3,115	74.3	3,190	76.2	3,270	60,900	104%
Alliant Reloder 23	61.6	2,940	63.3	3,010	65.0	3,075	66.7	3,145	68.4	3,215	61,000	99%
Alliant Reloder 26	63.6	2,930	65.4	3,000	67.2	3,070	68.9	3,140	70.7	3,215	60,800	95%
Vihtavuori N570	67.5	2,905	69.4	2,980	71.3	3,055	73.1	3,125	75.0	3,205	60,900	103%
Hodgdon Retumbo	67.2	2,895	69.1	2,970	71.0	3,045	72.8	3,115	74.7	3,190	60,800	104%
Reload Swiss RS76	67.5	2,875	69.4	2,950	71.3	3,020	73.1	3,090	75.0	3,165	60,800	101%
Winchester StaBALL HD	68.3	2,860	70.2	2,930	72.1	3,005	74.0	3,080	75.9	3,155	60,900	103%
Hodgdon H1000	65.1	2,860	66.9	2,935	68.7	3,005	70.5	3,075	72.3	3,150	61,000	105%
IMR 8133	67.9	2,845	69.8	2,920	71.7	2,995	73.5	3,070	75.4	3,145	58,400	105%
Vihtavuori N565	64.1	2,870	65.9	2,940	67.7	3,010	69.4	3,075	71.2	3,145	60,900	100%
Accurate MagPro	65.3	2,845	67.1	2,915	68.9	2,985	70.8	3,065	72.6	3,135	61,000	99%
Ramshot Magnum	67.1	2,840	68.9	2,910	70.8	2,985	72.7	3,060	74.5	3,130	61,000	100%
Reload Swiss RS70	60.6	2,860	62.3	2,930	64.0	2,995	65.6	3,060	67.3	3,130	60,800	91%
Norma MRP	61.1	2,855	62.8	2,920	64.5	2,990	66.2	3,055	67.9	3,125	60,900	94%
Hodgdon H4831SC	60.8	2,845	62.5	2,915	64.2	2,980	65.9	3,050	67.6	3,120	60,800	91%
Norma URP	55.6	2,855	57.1	2,915	58.7	2,985	60.3	3,050	61.8	3,115	61,000	91%
Alliant Reloder 25	63.7	2,830	65.5	2,900	67.3	2,970	69.0	3,040	70.8	3,110	61,000	103%
IMR 4831	58.1	2,835	59.7	2,900	61.3	2,970	62.9	3,035	64.5	3,100	60,800	93%
Vihtavuori N560	60.9	2,835	62.6	2,900	64.3	2,965	66.0	3,030	67.7	3,095	60,800	95%
Vihtavuori N165	59.9	2,760	61.6	2,825	63.3	2,885	64.9	2,950	66.6	3,015	61,000	96%

160 gr Bullet · 25" barrel

COAL: 3.220" • Bullet length: 1.386" • Seat depth: 0.666" • Usable capacity: 73.4 / 83.6 gr H_2O

Powder	STEP 1 · 90%		STEP 2		STEP 3		STEP 4		STEP 5 · LIMIT			
	gr	fps	gr	fps	gr	fps	gr	fps	gr	fps	psi	Fill
Ramshot Grand	67.1	2,880	68.9	2,950	70.8	3,025	72.7	3,105	74.5	3,175	61,000	103%
Vihtavuori N570	65.7	2,830	67.5	2,900	69.3	2,970	71.2	3,045	73.0	3,120	60,900	102%
Alliant Reloder 26	61.9	2,840	63.6	2,905	65.3	2,970	67.1	3,045	68.8	3,110	60,800	94%
Alliant Reloder 23	59.9	2,845	61.5	2,905	63.2	2,975	64.8	3,035	66.5	3,105	60,900	98%
Hodgdon Retumbo	65.6	2,815	67.4	2,885	69.3	2,955	71.1	3,025	72.9	3,095	60,900	103%
IMR 8133	66.7	2,785	68.5	2,855	70.4	2,930	72.3	3,005	74.1	3,080	59,400	105%
Reload Swiss RS76	65.9	2,790	67.7	2,860	69.6	2,930	71.4	3,000	73.2	3,070	60,900	101%
Hodgdon H1000	63.5	2,780	65.3	2,850	67.0	2,920	68.8	2,990	70.5	3,055	61,000	104%
Accurate MagPro	63.8	2,770	65.6	2,840	67.3	2,905	69.1	2,975	70.9	3,050	60,900	99%
Alliant Reloder 22	59.3	2,785	61.0	2,855	62.6	2,915	64.3	2,985	65.9	3,050	60,800	95%
Ramshot Magnum	65.4	2,760	67.2	2,830	69.1	2,905	70.9	2,975	72.7	3,045	60,900	99%
Alliant Reloder 19	58.4	2,780	60.0	2,845	61.7	2,910	63.3	2,975	64.9	3,040	61,000	94%
Vihtavuori N565	61.9	2,775	63.6	2,840	65.3	2,905	67.1	2,975	68.8	3,040	60,800	98%
Reload Swiss RS70	59.0	2,770	60.6	2,835	62.3	2,900	63.9	2,965	65.6	3,035	61,000	90%
Alliant Reloder 25	62.1	2,745	63.8	2,810	65.5	2,880	67.3	2,950	69.0	3,020	60,800	103%
Vihtavuori N568	65.5	2,725	67.3	2,795	69.2	2,875	71.0	2,945	72.8	3,020	61,000	103%
IMR 4831	56.6	2,750	58.2	2,815	59.8	2,875	61.3	2,940	62.9	3,005	60,800	92%
IMR 7977	62.9	2,730	64.7	2,800	66.4	2,865	68.2	2,940	69.9	3,005	61,000	103%
IMR 7828	59.7	2,735	61.4	2,805	63.0	2,865	64.7	2,930	66.3	2,995	61,000	91%
Vihtavuori N165	58.1	2,665	59.7	2,725	61.3	2,785	63.0	2,845	64.6	2,910	61,000	94%

168 gr Bullet · 25" barrel

COAL: 3.251" • Bullet length: 1.433" • Seat depth: 0.683" • Usable capacity: 73.2 / 83.6 gr H_2O

Powder	STEP 1 · 90%		STEP 2		STEP 3		STEP 4		STEP 5 · LIMIT			
	gr	fps	gr	fps	gr	fps	gr	fps	gr	fps	psi	Fill
Ramshot Grand	66.3	2,825	68.2	2,895	70.0	2,965	71.8	3,035	73.7	3,115	61,000	102%
Vihtavuori N570	64.7	2,780	66.5	2,850	68.3	2,920	70.1	2,990	71.9	3,060	61,000	101%
IMR 8133	66.5	2,760	68.3	2,830	70.2	2,900	72.1	2,975	73.9	3,050	60,800	105%
Alliant Reloder 26	61.1	2,780	62.8	2,845	64.5	2,910	66.2	2,980	67.9	3,045	61,000	93%
Hodgdon Retumbo	64.8	2,760	66.6	2,825	68.4	2,895	70.2	2,965	72.0	3,035	60,800	102%
Alliant Reloder 23	59.0	2,775	60.6	2,840	62.3	2,905	63.9	2,965	65.5	3,030	61,000	97%
Reload Swiss RS76	65.1	2,735	66.9	2,800	68.7	2,865	70.5	2,935	72.3	3,000	60,800	100%
Hodgdon H1000	62.6	2,725	64.3	2,790	66.1	2,855	67.8	2,925	69.6	2,995	60,900	103%
Accurate MagPro	63.1	2,720	64.8	2,785	66.6	2,855	68.3	2,920	70.1	2,990	60,800	98%
Ramshot Magnum	64.7	2,715	66.5	2,785	68.3	2,850	70.1	2,920	71.9	2,990	61,000	98%
Alliant Reloder 22	58.5	2,730	60.1	2,790	61.8	2,855	63.4	2,920	65.0	2,980	60,900	94%
Vihtavuori N565	60.7	2,715	62.4	2,780	64.1	2,840	65.7	2,905	67.4	2,970	60,800	97%
Alliant Reloder 25	61.4	2,695	63.1	2,760	64.8	2,825	66.5	2,890	68.2	2,960	60,800	102%
Norma MRP	58.6	2,700	60.2	2,760	61.8	2,825	63.5	2,890	65.1	2,950	60,900	92%
IMR 4831	56.0	2,695	57.5	2,755	59.1	2,820	60.7	2,880	62.2	2,945	60,900	91%
IMR 7977	62.2	2,680	63.9	2,745	65.7	2,815	67.4	2,880	69.1	2,945	61,000	102%
Winchester Supreme 780	59.3	2,655	61.0	2,720	62.6	2,780	64.3	2,850	65.9	2,910	60,900	91%
Hodgdon H4831	57.6	2,660	59.2	2,720	60.8	2,780	62.4	2,840	64.0	2,905	60,800	94%
Accurate 3100	57.2	2,655	58.8	2,715	60.4	2,780	61.9	2,840	63.5	2,900	61,000	94%
Vihtavuori N560	57.9	2,665	59.5	2,725	61.1	2,785	62.7	2,845	64.3	2,900	60,900	92%

175 gr Bullet · 25" barrel

COAL: 3.245" • Bullet length: 1.458" • Seat depth: 0.713" • Usable capacity: 72.7 / 83.6 gr H_2O

Powder	STEP 1 · 90%		STEP 2		STEP 3		STEP 4		STEP 5 · LIMIT			
	gr	fps	gr	fps	gr	fps	gr	fps	gr	fps	psi	Fill
Ramshot Grand	65.4	2,765	67.2	2,835	69.1	2,910	70.9	2,980	72.7	3,050	60,800	102%
IMR 8133	65.7	2,710	67.5	2,780	69.3	2,850	71.2	2,925	73.0	2,995	60,900	104%
Vihtavuori N570	63.5	2,725	65.3	2,795	67.0	2,860	68.8	2,925	70.6	2,995	60,900	100%
Alliant Reloder 26	60.1	2,720	61.8	2,785	63.5	2,850	65.1	2,915	66.8	2,980	61,000	92%
Hodgdon Retumbo	63.9	2,705	65.7	2,770	67.5	2,840	69.2	2,905	71.0	2,975	60,900	101%
Alliant Reloder 23	58.0	2,715	59.6	2,775	61.2	2,835	62.8	2,895	64.4	2,960	61,000	96%
Winchester StaBALL HD	65.0	2,675	66.8	2,740	68.6	2,805	70.4	2,875	72.2	2,945	60,900	101%
Reload Swiss RS76	64.2	2,680	66.0	2,745	67.8	2,810	69.5	2,875	71.3	2,940	60,900	99%
Accurate MagPro	62.3	2,670	64.0	2,735	65.8	2,805	67.5	2,870	69.2	2,935	60,900	97%
Hodgdon H1000	61.7	2,670	63.4	2,735	65.2	2,805	66.9	2,870	68.6	2,935	61,000	102%
Ramshot Magnum	63.8	2,665	65.6	2,735	67.3	2,800	69.1	2,865	70.9	2,935	61,000	98%
Alliant Reloder 19	56.8	2,670	58.4	2,730	60.0	2,795	61.5	2,850	63.1	2,915	60,900	92%
Alliant Reloder 22	57.5	2,665	59.1	2,730	60.7	2,790	62.3	2,850	63.9	2,915	60,800	93%
IMR 7828SSC	58.3	2,660	59.9	2,720	61.5	2,780	63.2	2,845	64.8	2,910	60,800	93%
Alliant Reloder 25	60.6	2,645	62.3	2,710	64.0	2,775	65.6	2,835	67.3	2,900	60,900	101%
Vihtavuori N565	59.4	2,655	61.0	2,715	62.7	2,775	64.3	2,835	66.0	2,900	60,900	95%
IMR 4831	55.2	2,640	56.7	2,700	58.3	2,760	59.8	2,820	61.3	2,880	60,900	90%
Hodgdon Hybrid 100V	52.6	2,610	54.0	2,670	55.5	2,730	57.0	2,790	58.4	2,845	60,900	90%
Accurate 3100	56.2	2,595	57.8	2,660	59.3	2,715	60.9	2,775	62.4	2,835	60,900	93%
Vihtavuori N560	56.7	2,600	58.3	2,655	59.9	2,715	61.4	2,770	63.0	2,830	60,900	91%

183 gr Bullet · 25" barrel

COAL: 3.290" • Bullet length: 1.585" • Seat depth: 0.795" • Usable capacity: 71.5 / 83.6 gr H_2O

Powder	STEP 1 · 90%		STEP 2		STEP 3		STEP 4		STEP 5 · LIMIT			
	gr	fps	gr	fps	gr	fps	gr	fps	gr	fps	psi	Fill
Ramshot Grand	64.2	2,710	66.0	2,775	67.8	2,845	69.5	2,910	71.3	2,980	60,900	102%
IMR 8133	64.4	2,655	66.2	2,720	68.0	2,790	69.7	2,855	71.5	2,925	60,800	104%
Vihtavuori N570	62.0	2,665	63.7	2,730	65.5	2,795	67.2	2,860	68.9	2,925	60,800	99%
Alliant Reloder 26	58.7	2,655	60.3	2,715	62.0	2,780	63.6	2,840	65.2	2,905	60,800	92%
Hodgdon Retumbo	62.6	2,645	64.3	2,705	66.0	2,770	67.8	2,840	69.5	2,905	60,800	101%
Alliant Reloder 23	56.6	2,640	58.2	2,700	59.8	2,760	61.3	2,820	62.9	2,880	61,000	95%
Vihtavuori N568	62.6	2,605	64.3	2,670	66.0	2,735	67.8	2,805	69.5	2,875	60,800	101%
Winchester StaBALL HD	63.6	2,610	65.4	2,675	67.2	2,745	68.9	2,805	70.7	2,875	60,800	101%
Ramshot Magnum	62.5	2,610	64.2	2,675	66.0	2,740	67.7	2,805	69.4	2,870	60,900	97%
Reload Swiss RS76	62.8	2,615	64.5	2,675	66.3	2,740	68.0	2,800	69.8	2,870	60,900	98%
Hodgdon H1000	60.4	2,610	62.1	2,675	63.8	2,735	65.4	2,795	67.1	2,865	60,900	102%
Alliant Reloder 19	55.5	2,600	57.0	2,660	58.6	2,720	60.2	2,785	61.7	2,845	60,800	92%
Alliant Reloder 25	59.3	2,585	61.0	2,650	62.6	2,710	64.3	2,775	65.9	2,835	60,900	101%
IMR 7828SSC	57.0	2,595	58.6	2,655	60.1	2,710	61.7	2,775	63.3	2,835	60,800	92%
Vihtavuori N565	57.8	2,590	59.4	2,645	61.0	2,705	62.6	2,765	64.2	2,825	60,800	94%
IMR 7977	60.0	2,565	61.7	2,630	63.4	2,695	65.0	2,755	66.7	2,820	60,900	101%
Hodgdon H4831SC	56.3	2,575	57.8	2,630	59.4	2,695	61.0	2,755	62.5	2,810	60,800	88%
IMR 4831	54.0	2,575	55.5	2,635	57.0	2,690	58.5	2,750	60.0	2,810	60,900	90%
Norma MRP	56.3	2,575	57.9	2,635	59.5	2,695	61.0	2,750	62.6	2,810	61,000	91%
Hodgdon H4831	55.4	2,535	56.9	2,595	58.5	2,655	60.0	2,710	61.5	2,765	60,900	92%

197 gr Bullet · 25" barrel

COAL: 3.287" • Bullet length: 1.660" • Seat depth: 0.873" • Usable capacity: 70.6 / 83.6 gr H_2O

Powder	STEP 1 · 90%		STEP 2		STEP 3		STEP 4		STEP 5 · LIMIT			
	gr	fps	gr	fps	gr	fps	gr	fps	gr	fps	psi	Fill
Ramshot Grand	62.6	2,610	64.3	2,675	66.1	2,740	67.8	2,805	69.6	2,875	61,000	100%
IMR 8133	62.8	2,565	64.5	2,630	66.3	2,695	68.0	2,760	69.8	2,825	60,800	103%
Vihtavuori N570	59.9	2,565	61.5	2,625	63.2	2,690	64.8	2,745	66.5	2,810	60,800	97%
Hodgdon Retumbo	60.9	2,550	62.6	2,610	64.3	2,670	66.0	2,735	67.7	2,795	61,000	100%
Vihtavuori N568	61.0	2,530	62.7	2,595	64.4	2,660	66.1	2,725	67.8	2,790	60,900	99%
Alliant Reloder 26	56.9	2,550	58.5	2,610	60.0	2,665	61.6	2,725	63.2	2,785	60,900	90%
Accurate MagPro	59.6	2,530	61.3	2,590	62.9	2,650	64.5	2,710	66.2	2,775	61,000	96%
Ramshot Magnum	60.8	2,520	62.5	2,585	64.2	2,645	65.9	2,710	67.6	2,770	60,800	96%
Winchester StaBALL HD	62.0	2,520	63.7	2,580	65.5	2,645	67.2	2,710	68.9	2,770	60,900	99%
Reload Swiss RS76	61.2	2,515	62.9	2,575	64.6	2,635	66.3	2,700	68.0	2,760	61,000	97%
Alliant Reloder 23	54.7	2,525	56.2	2,580	57.8	2,640	59.3	2,695	60.8	2,755	60,800	93%
Hodgdon H1000	58.8	2,515	60.4	2,575	62.0	2,635	63.7	2,695	65.3	2,755	61,000	100%
Alliant Reloder 19	54.0	2,505	55.5	2,565	57.0	2,620	58.5	2,680	60.0	2,735	60,800	90%
Alliant Reloder 25	57.8	2,495	59.4	2,555	61.0	2,615	62.6	2,670	64.2	2,735	61,000	99%
Alliant Reloder 22	54.5	2,495	56.0	2,555	57.5	2,610	59.1	2,670	60.6	2,725	61,000	91%
IMR 7828SSC	55.3	2,495	56.8	2,550	58.3	2,605	59.9	2,665	61.4	2,720	61,000	90%
IMR 7977	58.4	2,475	60.0	2,535	61.7	2,595	63.3	2,655	64.9	2,715	60,800	100%
Vihtavuori N565	55.6	2,485	57.1	2,535	58.7	2,595	60.3	2,650	61.8	2,705	60,900	92%
Hodgdon H50BMG	65.4	2,435	67.2	2,495	69.1	2,560	70.9	2,625	72.7	2,690	59,100	105%
IMR 7828	54.6	2,455	56.1	2,510	57.7	2,570	59.2	2,625	60.7	2,680	60,900	87%

7mm Remington SAUM

Remington introduced the 7mm Remington Short Action Ultra Magnum (RSAUM) in 2002. It was a competitor to Winchester's 7mm WSM. Like the rest of Remington's Ultra Magnum family it is based on the .404 Jeffery case. In this instance the case is shortened to fit short actions. The cartridge was designed for the Remington Model Seven Magnum rifle and intended primarily for long-range hunting. The aim was to produce 7mm Remington Magnum performance from a smaller case and a more compact rifle.

Remington factory loads included a 140-grain Core-Lokt Ultra at 3,175 fps, a 150-grain Core-Lokt at 3,110 fps and a 160-grain Core-Lokt Ultra at 2,960 fps. The 7mm RSAUM and 7mm WSM differ in velocity by less than 50 fps. Both work best with bullets of 120 to 160 grains. Late introduction and limited rifle availability held back early sales. Since then the cartridge has regained popularity with custom rifle builders and handloaders. It is used in F-Class and other long-range competition.

Cartridge specifications	
Bullet Diameter	**0.284" (7.21 mm)**
Max Case Length	**2.035" (51.69 mm)**
Case Trim Length	**2.025" (51.44 mm)**
Max COAL	**2.825" (71.76 mm)**
Primer Pocket	**Large Rifle**
Standard Twist	**1:9"**
Case Capacity	**73.6 gr H_2O**
Max Pressure	**65,000 psi (SAAMI)**

120 gr Bullet · 25" barrel

COAL: 2.725" • Bullet length: 1.097" • Seat depth: 0.407" • Usable capacity: 67.3 / 73.6 gr H_2O

Powder	STEP 1 · 90%		STEP 2		STEP 3		STEP 4		STEP 5 · LIMIT			
	gr	fps	gr	fps	gr	fps	gr	fps	gr	fps	psi	Fill
Winchester StaBALL 6.5	59.6	3,260	61.3	3,340	62.9	3,415	64.5	3,485	66.2	3,570	65,000	99%
Hodgdon SUPERFORMANCE	61.1	3,215	62.8	3,295	64.5	3,375	66.2	3,455	67.9	3,540	64,800	99%
Ramshot Big Game	56.8	3,210	58.4	3,285	60.0	3,360	61.5	3,430	63.1	3,505	64,800	95%
Norma URP	57.4	3,175	59.0	3,255	60.6	3,335	62.2	3,410	63.8	3,490	64,900	104%
Reload Swiss RS60	57.0	3,180	58.6	3,260	60.1	3,330	61.7	3,410	63.3	3,490	64,900	97%
Reload Swiss RS62	59.9	3,170	61.5	3,245	63.2	3,330	64.8	3,405	66.5	3,490	64,800	103%
Vihtavuori N555	59.2	3,170	60.9	3,250	62.5	3,325	64.2	3,410	65.8	3,485	62,300	105%
IMR 4350	57.7	3,165	59.3	3,240	60.9	3,315	62.5	3,390	64.1	3,470	64,800	102%
Hodgdon H4350	57.2	3,165	58.8	3,240	60.4	3,315	61.9	3,385	63.5	3,465	64,900	95%
Reload Swiss RS52	52.7	3,185	54.2	3,260	55.6	3,325	57.0	3,390	58.5	3,465	64,900	91%
Alliant Power Pro 4000-MR	59.5	3,140	61.1	3,215	62.8	3,295	64.4	3,370	66.1	3,450	64,900	100%
Hodgdon H414	56.5	3,145	58.1	3,220	59.6	3,290	61.2	3,365	62.8	3,445	64,900	95%
Winchester 760	56.7	3,145	58.3	3,220	59.9	3,295	61.4	3,365	63.0	3,440	64,800	96%
Vihtavuori N550	54.4	3,145	55.9	3,215	57.4	3,280	58.9	3,350	60.4	3,420	65,000	94%
IMR 4831	58.3	3,100	59.9	3,175	61.5	3,250	63.2	3,335	64.8	3,415	64,700	103%
Vihtavuori N160	58.6	3,115	60.2	3,185	61.8	3,260	63.5	3,335	65.1	3,410	64,400	105%
IMR 7828	62.3	3,065	64.0	3,145	65.8	3,230	67.5	3,310	69.2	3,390	64,900	103%
Winchester StaBALL Match	51.7	3,110	53.1	3,175	54.5	3,240	56.0	3,310	57.4	3,375	64,800	96%
Vihtavuori N150	51.2	3,100	52.6	3,165	54.0	3,230	55.5	3,300	56.9	3,370	65,000	95%
IMR 7828SSC	60.8	3,040	62.5	3,120	64.2	3,200	65.8	3,275	67.5	3,355	64,900	104%

130 gr Bullet · 25" barrel

COAL: 2.660" • Bullet length: 1.100" • Seat depth: 0.476" • Usable capacity: 66.4 / 73.6 gr H_2O

Powder	STEP 1 · 90%		STEP 2		STEP 3		STEP 4		STEP 5 · LIMIT			
	gr	fps	gr	fps	gr	fps	gr	fps	gr	fps	psi	Fill
Winchester StaBALL 6.5	58.0	3,140	59.6	3,210	61.2	3,285	62.8	3,355	64.4	3,430	64,800	98%
Hodgdon SUPERFORMANCE	59.7	3,120	61.4	3,195	63.0	3,270	64.7	3,350	66.3	3,425	64,900	98%
Alliant Reloder 26	62.4	3,095	64.1	3,175	65.8	3,255	67.6	3,335	69.3	3,415	62,500	105%
Vihtavuori N555	58.3	3,110	59.9	3,185	61.5	3,260	63.2	3,340	64.8	3,415	64,800	105%
Hodgdon Hybrid 100V	55.9	3,080	57.5	3,160	59.0	3,230	60.5	3,305	62.1	3,385	62,300	105%
Reload Swiss RS62	58.5	3,075	60.1	3,150	61.8	3,230	63.4	3,310	65.0	3,385	64,900	102%
Norma URP	55.9	3,080	57.5	3,160	59.0	3,230	60.5	3,305	62.1	3,380	64,800	103%
Ramshot Big Game	55.3	3,090	56.8	3,160	58.3	3,225	59.9	3,300	61.4	3,370	65,000	94%
Reload Swiss RS70	60.0	3,055	61.7	3,135	63.4	3,215	65.0	3,290	66.7	3,370	64,800	101%
Alliant Reloder 19	58.9	3,035	60.5	3,110	62.2	3,190	63.8	3,265	65.4	3,340	64,900	105%
Hodgdon H4350	55.5	3,055	57.0	3,120	58.6	3,195	60.2	3,270	61.7	3,340	64,900	94%
Winchester 760	55.3	3,035	56.8	3,105	58.3	3,175	59.9	3,250	61.4	3,320	64,900	95%
Hodgdon H414	55.0	3,035	56.5	3,105	58.0	3,170	59.6	3,245	61.1	3,315	64,800	94%
Alliant Power Pro 2000-MR	53.0	3,035	54.5	3,105	56.0	3,175	57.4	3,240	58.9	3,310	64,800	93%
Ramshot Hunter	56.6	3,005	58.2	3,080	59.8	3,150	61.3	3,220	62.9	3,295	64,900	101%
IMR 4007 SSC	54.5	3,005	56.0	3,075	57.5	3,145	59.1	3,220	60.6	3,290	64,800	98%
Hodgdon H4831SC	58.7	2,980	60.3	3,055	62.0	3,130	63.6	3,205	65.2	3,280	64,800	99%
Vihtavuori N550	52.5	3,010	54.0	3,075	55.4	3,140	56.8	3,200	58.3	3,265	64,900	92%
Hodgdon H380	52.7	2,985	54.2	3,050	55.7	3,120	57.1	3,185	58.6	3,255	64,900	94%
IMR 7828SSC	59.1	2,955	60.8	3,030	62.4	3,100	64.0	3,175	65.7	3,255	64,900	103%

140 gr Bullet · 25" barrel

COAL: 2.770" • Bullet length: 1.261" • Seat depth: 0.526" • Usable capacity: 65.5 / 73.6 gr H_2O

Powder	STEP 1 · 90%		STEP 2		STEP 3		STEP 4		STEP 5 · LIMIT			
	gr	fps	gr	fps	gr	fps	gr	fps	gr	fps	psi	Fill
Accurate 4350	57.9	3,085	59.5	3,155	61.1	3,230	62.7	3,305	64.3	3,380	65,000	103%
Alliant Reloder 26	61.6	3,035	63.3	3,115	65.0	3,190	66.7	3,270	68.4	3,350	64,400	105%
Hodgdon SUPERFORMANCE	58.2	3,015	59.8	3,090	61.5	3,165	63.1	3,240	64.7	3,315	64,800	97%
Hodgdon Hybrid 100V	55.2	3,010	56.7	3,080	58.3	3,155	59.8	3,230	61.3	3,300	63,900	105%
Winchester StaBALL 6.5	56.4	3,015	58.0	3,085	59.5	3,155	61.1	3,225	62.7	3,300	64,700	97%
Vihtavuori N555	56.4	3,000	58.0	3,075	59.5	3,140	61.1	3,215	62.7	3,290	64,900	103%
Reload Swiss RS62	57.2	2,985	58.8	3,060	60.4	3,135	61.9	3,205	63.5	3,280	64,900	101%
Alliant Reloder 19	57.5	2,945	59.1	3,020	60.7	3,095	62.3	3,165	63.9	3,240	64,900	104%
IMR 4955	57.3	2,950	58.9	3,020	60.5	3,095	62.1	3,165	63.7	3,240	64,800	98%
Ramshot Big Game	53.7	2,965	55.2	3,035	56.7	3,100	58.2	3,170	59.7	3,235	65,000	93%
Alliant Power Pro 4000-MR	56.7	2,940	58.3	3,010	59.9	3,085	61.4	3,150	63.0	3,225	64,800	98%
Hodgdon H4350	53.9	2,945	55.4	3,010	56.9	3,080	58.4	3,150	59.9	3,215	64,800	92%
IMR 4831	55.8	2,925	57.3	2,995	58.9	3,070	60.5	3,145	62.0	3,215	65,000	102%
Winchester 760	53.8	2,925	55.3	2,990	56.8	3,060	58.3	3,125	59.8	3,195	64,900	94%
IMR 7828	59.0	2,895	60.6	2,965	62.3	3,040	63.9	3,115	65.5	3,190	64,800	101%
IMR 4007 SSC	53.2	2,905	54.7	2,975	56.2	3,045	57.6	3,105	59.1	3,175	64,800	97%
Hodgdon H4831	57.6	2,885	59.2	2,955	60.8	3,025	62.4	3,100	64.0	3,170	64,000	105%
IMR 4451	53.8	2,900	55.3	2,965	56.8	3,035	58.3	3,105	59.8	3,170	65,000	95%
Alliant Reloder 16	52.2	2,895	53.7	2,960	55.1	3,020	56.5	3,085	58.0	3,150	64,800	98%
IMR 7828SSC	57.6	2,865	59.2	2,940	60.8	3,010	62.4	3,080	64.0	3,150	64,900	102%

150 gr Bullet · 25" barrel

COAL: 2.750" • Bullet length: 1.300" • Seat depth: 0.585" • Usable capacity: 64.6 / 73.6 gr H_2O

Powder	STEP 1 · 90%		STEP 2		STEP 3		STEP 4		STEP 5 · LIMIT			
	gr	fps	gr	fps	gr	fps	gr	fps	gr	fps	psi	Fill
Accurate 4350	56.3	2,970	57.9	3,040	59.5	3,115	61.0	3,180	62.6	3,255	64,800	101%
Alliant Reloder 26	60.3	2,955	62.0	3,030	63.6	3,100	65.3	3,175	67.0	3,255	65,000	104%
Hodgdon Hybrid 100V	54.3	2,930	55.8	2,995	57.3	3,065	58.8	3,140	60.3	3,210	65,000	105%
Hodgdon SUPERFORMANCE	56.8	2,920	58.4	2,990	60.0	3,060	61.5	3,130	63.1	3,200	64,800	96%
Reload Swiss RS62	55.8	2,890	57.3	2,960	58.9	3,030	60.5	3,105	62.0	3,175	64,900	100%
Winchester StaBALL 6.5	54.9	2,905	56.4	2,970	58.0	3,040	59.5	3,105	61.0	3,170	64,700	95%
Vihtavuori N555	54.5	2,890	56.0	2,960	57.5	3,025	59.1	3,095	60.6	3,165	64,800	101%
Vihtavuori N560	58.4	2,880	60.0	2,945	61.7	3,015	63.3	3,085	64.9	3,155	62,000	105%
Alliant Reloder 19	56.2	2,860	57.8	2,935	59.3	3,000	60.9	3,075	62.4	3,145	64,800	103%
Winchester Supreme 780	59.6	2,850	61.3	2,925	62.9	2,995	64.5	3,065	66.2	3,145	65,000	103%
IMR 4831	54.5	2,835	56.0	2,900	57.5	2,970	59.1	3,045	60.6	3,115	65,000	101%
Hodgdon H4350	52.4	2,840	53.9	2,905	55.3	2,970	56.8	3,035	58.2	3,100	64,900	91%
IMR 4350	52.9	2,835	54.4	2,905	55.8	2,965	57.3	3,030	58.8	3,100	64,900	98%
Hodgdon H4831	56.4	2,805	58.0	2,875	59.5	2,940	61.1	3,010	62.7	3,085	64,800	104%
Accurate 2700	52.2	2,825	53.7	2,890	55.1	2,950	56.5	3,015	58.0	3,080	64,900	91%
Hodgdon H4831SC	56.0	2,800	57.5	2,865	59.1	2,935	60.7	3,010	62.2	3,075	65,000	97%
Winchester 760	52.4	2,820	53.9	2,885	55.3	2,945	56.8	3,015	58.2	3,075	64,800	93%
IMR 4007 SSC	51.8	2,805	53.3	2,870	54.7	2,935	56.1	2,995	57.6	3,065	64,800	95%
Alliant Power Pro 2000-MR	50.0	2,800	51.4	2,860	52.8	2,925	54.2	2,985	55.6	3,050	64,900	90%
Vihtavuori N160	53.9	2,790	55.4	2,855	56.9	2,920	58.4	2,985	59.9	3,050	64,800	101%

162 gr Bullet · 25" barrel

COAL: 2.770" • Bullet length: 1.409" • Seat depth: 0.674" • Usable capacity: 63.3 / 73.6 gr H_2O

Powder	STEP 1 · 90%		STEP 2		STEP 3		STEP 4		STEP 5 · LIMIT			
	gr	fps	gr	fps	gr	fps	gr	fps	gr	fps	psi	Fill
Alliant Reloder 26	58.5	2,850	60.1	2,920	61.8	2,995	63.4	3,065	65.0	3,140	64,800	103%
Accurate 4350	54.6	2,860	56.1	2,925	57.7	2,995	59.2	3,060	60.7	3,130	64,900	100%
Hodgdon Hybrid 100V	52.7	2,820	54.2	2,885	55.7	2,955	57.1	3,020	58.6	3,090	64,900	104%
Hodgdon SUPERFORMANCE	55.2	2,815	56.7	2,880	58.3	2,950	59.8	3,020	61.3	3,085	64,900	95%
Vihtavuori N560	57.2	2,800	58.8	2,865	60.4	2,930	62.0	3,000	63.6	3,065	64,700	105%
Alliant Reloder 23	55.1	2,795	56.6	2,860	58.2	2,930	59.7	2,995	61.2	3,060	62,800	105%
Reload Swiss RS62	54.2	2,790	55.7	2,855	57.2	2,925	58.7	2,990	60.2	3,060	64,800	99%
Norma URP	51.4	2,790	52.8	2,850	54.3	2,920	55.7	2,985	57.1	3,050	65,000	99%
Norma MRP	55.5	2,750	57.0	2,815	58.6	2,885	60.2	2,955	61.7	3,020	64,800	101%
IMR 4831	53.0	2,740	54.5	2,805	56.0	2,875	57.4	2,935	58.9	3,005	64,900	100%
Alliant Reloder 22	54.5	2,730	56.0	2,795	57.5	2,860	59.1	2,930	60.6	3,000	65,000	102%
Accurate MagPro	58.6	2,705	60.2	2,775	61.8	2,845	63.5	2,915	65.1	2,990	62,300	105%
Hodgdon H4350	50.6	2,725	52.0	2,790	53.4	2,850	54.8	2,910	56.2	2,975	64,800	89%
IMR 7828	55.5	2,710	57.0	2,775	58.6	2,840	60.2	2,910	61.7	2,975	64,800	98%
Ramshot Big Game	50.4	2,730	51.8	2,790	53.2	2,850	54.6	2,910	56.0	2,970	64,900	90%
Hodgdon H4831SC	54.3	2,700	55.8	2,765	57.3	2,830	58.8	2,895	60.3	2,960	64,800	96%
Winchester 760	50.8	2,710	52.2	2,770	53.6	2,830	55.0	2,895	56.4	2,955	65,000	92%
Ramshot Hunter	52.2	2,700	53.7	2,765	55.1	2,825	56.5	2,885	58.0	2,950	64,900	97%
IMR 7828SSC	54.2	2,680	55.7	2,740	57.2	2,805	58.7	2,870	60.2	2,935	64,800	99%
Alliant Reloder 16	48.8	2,660	50.1	2,715	51.5	2,775	52.9	2,835	54.2	2,890	64,700	95%

175 gr Bullet · 25" barrel

COAL: 2.800" • Bullet length: 1.513" • Seat depth: 0.748" • Usable capacity: 62.2 / 73.6 gr H_2O

Powder	STEP 1 · 90%		STEP 2		STEP 3		STEP 4		STEP 5 · LIMIT			
	gr	fps	gr	fps	gr	fps	gr	fps	gr	fps	psi	Fill
Alliant Reloder 26	56.8	2,750	58.4	2,815	60.0	2,885	61.5	2,950	63.1	3,020	64,900	102%
Accurate 4350	52.9	2,740	54.4	2,805	55.8	2,865	57.3	2,930	58.8	2,995	65,000	99%
Hodgdon Hybrid 100V	51.3	2,710	52.7	2,775	54.1	2,835	55.6	2,905	57.0	2,970	64,900	103%
Alliant Reloder 23	54.0	2,710	55.5	2,770	57.0	2,835	58.5	2,900	60.0	2,965	64,800	105%
Hodgdon SUPERFORMANCE	53.5	2,705	55.0	2,765	56.5	2,830	57.9	2,890	59.4	2,960	64,900	93%
Reload Swiss RS62	52.7	2,690	54.2	2,755	55.6	2,815	57.0	2,875	58.5	2,940	64,900	98%
Reload Swiss RS70	54.0	2,675	55.5	2,740	57.0	2,805	58.5	2,870	60.0	2,935	64,900	97%
Vihtavuori N560	55.2	2,680	56.7	2,740	58.3	2,805	59.8	2,870	61.3	2,930	64,900	103%
Alliant Reloder 19	53.0	2,665	54.5	2,730	56.0	2,795	57.4	2,855	58.9	2,925	64,900	101%
Winchester Supreme 780	56.1	2,660	57.6	2,725	59.2	2,790	60.8	2,860	62.3	2,925	64,800	101%
Winchester StaBALL 6.5	51.3	2,655	52.7	2,715	54.1	2,770	55.6	2,835	57.0	2,895	64,800	92%
IMR 4831	51.5	2,635	52.9	2,700	54.4	2,765	55.8	2,825	57.2	2,890	64,800	99%
Alliant Power Pro 4000-MR	52.1	2,630	53.5	2,690	55.0	2,750	56.5	2,815	57.9	2,880	64,900	95%
Alliant Reloder 22	52.8	2,625	54.3	2,690	55.8	2,755	57.2	2,815	58.7	2,880	64,900	100%
Hodgdon H4831SC	52.7	2,600	54.2	2,660	55.6	2,720	57.0	2,780	58.5	2,845	64,800	95%
Hodgdon H4350	48.8	2,605	50.1	2,660	51.5	2,725	52.9	2,785	54.2	2,840	64,700	88%
IMR 4350	49.3	2,600	50.7	2,660	52.0	2,715	53.4	2,780	54.8	2,840	64,700	95%
Winchester 760	49.1	2,590	50.5	2,650	51.8	2,705	53.1	2,760	54.5	2,820	64,900	90%
IMR 7828SSC	52.4	2,575	53.9	2,635	55.3	2,695	56.8	2,760	58.2	2,815	64,900	97%
Alliant Reloder 16	47.1	2,540	48.4	2,595	49.7	2,650	51.0	2,705	52.3	2,760	65,000	93%

183 gr Bullet · 25" barrel

COAL: 2.825" • Bullet length: 1.585" • Seat depth: 0.795" • Usable capacity: 61.5 / 73.6 gr H_2O

Powder	STEP 1 · 90%		STEP 2		STEP 3		STEP 4		STEP 5 · LIMIT			
	gr	fps	gr	fps	gr	fps	gr	fps	gr	fps	psi	Fill
Alliant Reloder 26	55.7	2,685	57.3	2,750	58.8	2,815	60.4	2,885	61.9	2,950	64,700	101%
Accurate 4350	51.8	2,665	53.3	2,730	54.7	2,790	56.1	2,850	57.6	2,915	64,800	98%
Alliant Reloder 23	53.0	2,645	54.5	2,705	56.0	2,770	57.4	2,830	58.9	2,895	64,900	104%
Hodgdon Hybrid 100V	50.4	2,650	51.8	2,710	53.2	2,770	54.6	2,835	56.0	2,895	64,800	102%
Hodgdon SUPERFORMANCE	52.5	2,640	54.0	2,700	55.4	2,760	56.8	2,820	58.3	2,885	64,800	93%
Reload Swiss RS62	51.8	2,630	53.2	2,690	54.6	2,750	56.1	2,815	57.5	2,875	64,900	97%
Accurate MagPro	56.9	2,595	58.5	2,665	60.0	2,725	61.6	2,795	63.2	2,865	64,600	105%
Vihtavuori N560	53.9	2,610	55.4	2,665	56.9	2,725	58.4	2,790	59.9	2,850	64,900	102%
Reload Swiss RS60	48.9	2,600	50.3	2,660	51.6	2,715	52.9	2,775	54.3	2,835	64,800	91%
Norma MRP	52.8	2,580	54.3	2,640	55.8	2,705	57.2	2,765	58.7	2,825	64,800	99%
Vihtavuori N555	49.2	2,585	50.6	2,645	52.0	2,705	53.3	2,760	54.7	2,820	64,800	95%
Alliant Reloder 22	51.8	2,565	53.3	2,630	54.7	2,685	56.1	2,745	57.6	2,810	64,800	99%
Alliant Power Pro 4000-MR	51.1	2,565	52.5	2,620	54.0	2,685	55.4	2,745	56.8	2,805	64,800	94%
IMR 7828	52.7	2,550	54.2	2,610	55.6	2,670	57.0	2,725	58.5	2,790	64,800	96%
Hodgdon H4831SC	51.8	2,540	53.2	2,600	54.6	2,655	56.1	2,720	57.5	2,780	65,000	94%
Hodgdon H4350	47.8	2,540	49.1	2,595	50.5	2,655	51.8	2,710	53.1	2,765	64,800	87%
Ramshot Hunter	49.6	2,525	51.0	2,580	52.4	2,640	53.7	2,695	55.1	2,755	64,900	95%
Vihtavuori N165	52.6	2,520	54.0	2,580	55.5	2,640	57.0	2,700	58.4	2,755	64,800	102%
Vihtavuori N170	55.7	2,515	57.3	2,575	58.8	2,630	60.4	2,695	61.9	2,755	65,000	105%
IMR 7828SSC	51.3	2,510	52.7	2,570	54.1	2,625	55.6	2,690	57.0	2,745	64,800	96%

7mm RUM

Remington introduced the 7mm Remington Ultra Magnum (RUM) in 2001 as part of its Ultra Magnum series. It is made by necking down the .300 Remington Ultra Magnum. That parent has a beltless rebated-rim case derived from the .404 Jeffery. The full-length case requires a long magnum action. It has the largest capacity of any commercial 7mm cartridge. The 7mm RUM should not be confused with the shorter 7mm Remington Short Action Ultra Magnum. The two are not interchangeable.

Remington tested its factory loads in 26-inch barrels. They include 140-grain bullets at about 3,425 fps, 150-grain bullets at about 3,325 fps and 175-grain bullets at about 3,025 fps. The cartridge produces considerably more energy at long range than the 7mm Remington Magnum. On the other hand it has substantial muzzle blast, sharp recoil and short barrel life. It is used mainly for long-range hunting of deer, elk and similar game in open country.

Cartridge specifications	
Bullet Diameter	**0.284" (7.21 mm)**
Max Case Length	**2.850" (72.39 mm)**
Case Trim Length	**2.840" (72.14 mm)**
Max COAL	**3.600" (91.44 mm)**
Primer Pocket	**Large Rifle**
Standard Twist	**1:9"**
Case Capacity	**112.6 gr H_2O**
Max Pressure	**65,000 psi (SAAMI)**

120 gr Bullet · 25" barrel

COAL: 3.484" • Bullet length: 1.141" • Seat depth: 0.508" • Usable capacity: 105.1 / 112.6 gr H_2O

Powder	STEP 1 · 90%		STEP 2		STEP 3		STEP 4		STEP 5 · LIMIT			
	gr	fps	gr	fps	gr	fps	gr	fps	gr	fps	psi	Fill
Hodgdon Retumbo	92.1	3,425	94.6	3,510	97.2	3,600	99.8	3,685	102.3	3,775	64,800	101%
Alliant Reloder 22	84.1	3,390	86.4	3,470	88.8	3,550	91.1	3,630	93.4	3,710	65,000	94%
Alliant Reloder 26	85.7	3,380	88.1	3,465	90.5	3,545	92.8	3,625	95.2	3,710	64,900	91%
Ramshot Grand	90.3	3,370	92.8	3,455	95.3	3,540	97.8	3,625	100.3	3,710	64,800	97%
IMR 8133	92.6	3,340	95.2	3,430	97.8	3,520	100.3	3,605	102.9	3,695	65,000	102%
Accurate MagPro	89.3	3,350	91.8	3,435	94.3	3,520	96.7	3,605	99.2	3,690	64,800	96%
Hodgdon H1000	88.7	3,345	91.2	3,430	93.7	3,515	96.1	3,600	98.6	3,685	64,900	102%
Alliant Reloder 25	87.3	3,320	89.7	3,400	92.2	3,485	94.6	3,570	97.0	3,655	64,900	101%
Vihtavuori N570	88.9	3,315	91.4	3,400	93.8	3,480	96.3	3,570	98.8	3,655	64,800	97%
Ramshot LRT	97.5	3,290	100.2	3,375	102.9	3,465	105.6	3,560	108.3	3,650	63,200	105%
Reload Swiss RS76	90.1	3,315	92.6	3,395	95.1	3,475	97.6	3,555	100.1	3,640	64,900	96%
IMR 7828	84.1	3,295	86.4	3,370	88.8	3,450	91.1	3,530	93.4	3,610	64,900	89%
IMR 7977	86.9	3,260	89.3	3,340	91.7	3,420	94.1	3,505	96.5	3,590	64,900	100%
Hodgdon H4831	82.3	3,280	84.6	3,355	86.8	3,430	89.1	3,510	91.4	3,585	65,000	93%
Norma MRP	81.9	3,280	84.2	3,355	86.5	3,435	88.7	3,510	91.0	3,585	64,900	90%
Hodgdon H50BMG	97.5	3,210	100.2	3,295	102.9	3,385	105.6	3,470	108.3	3,565	64,900	105%
Winchester StaBALL HD	89.1	3,240	91.6	3,320	94.0	3,400	96.5	3,480	99.0	3,565	64,900	96%
Ramshot Magnum	88.4	3,230	90.9	3,310	93.3	3,390	95.8	3,475	98.2	3,555	64,900	94%
Vihtavuori N560	81.5	3,265	83.8	3,335	86.0	3,410	88.3	3,480	90.5	3,555	64,800	90%
Vihtavuori N165	82.4	3,240	84.7	3,315	87.0	3,390	89.2	3,460	91.5	3,540	64,900	93%

130 gr Bullet · 25" barrel

COAL: 3.560" • Bullet length: 1.096" • Seat depth: 0.386" • Usable capacity: 106.9 / 112.6 gr H_2O

Powder	STEP 1 · 90%		STEP 2		STEP 3		STEP 4		STEP 5 · LIMIT			
	gr	fps	gr	fps	gr	fps	gr	fps	gr	fps	psi	Fill
Hodgdon Retumbo	91.4	3,320	93.9	3,400	96.5	3,485	99.0	3,570	101.5	3,650	64,900	99%
Ramshot Grand	89.9	3,275	92.4	3,355	94.9	3,435	97.4	3,520	99.9	3,605	64,900	95%
IMR 8133	92.3	3,260	94.9	3,345	97.4	3,425	100.0	3,510	102.6	3,600	64,900	100%
Accurate MagPro	89.0	3,265	91.5	3,345	94.0	3,430	96.4	3,510	98.9	3,595	65,000	94%
Ramshot LRT	97.9	3,235	100.6	3,320	103.3	3,405	106.1	3,495	108.8	3,590	64,900	104%
Alliant Reloder 22	83.1	3,275	85.4	3,350	87.7	3,425	90.0	3,500	92.3	3,580	64,800	92%
Alliant Reloder 26	84.7	3,270	87.0	3,345	89.4	3,425	91.8	3,505	94.1	3,580	64,900	88%
Hodgdon H1000	88.1	3,250	90.5	3,330	93.0	3,410	95.5	3,490	97.9	3,570	64,900	99%
Alliant Reloder 25	86.9	3,230	89.3	3,310	91.7	3,385	94.1	3,465	96.5	3,545	64,900	99%
Vihtavuori N568	90.2	3,190	92.7	3,270	95.2	3,360	97.7	3,445	100.2	3,535	64,900	97%
Vihtavuori N570	87.3	3,210	89.7	3,290	92.2	3,370	94.6	3,450	97.0	3,530	64,900	93%
Reload Swiss RS76	89.5	3,210	92.0	3,290	94.5	3,365	96.9	3,440	99.4	3,520	64,900	94%
IMR 7828	83.2	3,195	85.5	3,265	87.8	3,340	90.1	3,415	92.4	3,490	64,800	87%
IMR 7977	86.4	3,170	88.8	3,250	91.2	3,325	93.6	3,405	96.0	3,485	65,000	97%
Hodgdon H50BMG	97.0	3,130	99.7	3,215	102.4	3,295	105.1	3,380	107.8	3,470	64,900	103%
Hodgdon H4831	81.5	3,175	83.8	3,250	86.0	3,320	88.3	3,395	90.5	3,465	65,000	91%
Ramshot Magnum	87.9	3,145	90.4	3,225	92.8	3,305	95.3	3,385	97.7	3,465	64,900	92%
Winchester StaBALL HD	88.4	3,145	90.9	3,220	93.3	3,295	95.8	3,375	98.2	3,450	64,900	94%
Accurate 3100	80.2	3,145	82.4	3,220	84.7	3,295	86.9	3,370	89.1	3,440	64,900	90%
Hodgdon US 869	98.1	3,080	100.8	3,170	103.5	3,260	106.3	3,350	109.0	3,440	62,500	105%

139 gr Bullet · 25" barrel

COAL: 3.570" • Bullet length: 1.273" • Seat depth: 0.552" • Usable capacity: 104.1 / 112.6 gr H_2O

Powder	STEP 1 · 90%		STEP 2		STEP 3		STEP 4		STEP 5 · LIMIT			
	gr	fps	gr	fps	gr	fps	gr	fps	gr	fps	psi	Fill
Hodgdon Retumbo	88.7	3,225	91.2	3,305	93.6	3,380	96.0	3,460	98.5	3,540	64,800	98%
IMR 8133	89.7	3,170	92.2	3,250	94.7	3,335	97.2	3,415	99.7	3,500	64,900	100%
Ramshot Grand	87.4	3,180	89.8	3,260	92.3	3,340	94.7	3,420	97.1	3,500	64,900	95%
Accurate MagPro	86.5	3,175	88.9	3,255	91.3	3,335	93.7	3,410	96.1	3,495	64,900	94%
Ramshot LRT	95.2	3,150	97.8	3,230	100.5	3,315	103.2	3,405	105.8	3,490	64,900	104%
Alliant Reloder 26	82.0	3,170	84.3	3,245	86.5	3,315	88.8	3,390	91.1	3,470	64,800	88%
Alliant Reloder 22	80.5	3,175	82.7	3,245	85.0	3,320	87.2	3,390	89.4	3,465	64,900	91%
Hodgdon H1000	85.4	3,155	87.8	3,230	90.2	3,310	92.5	3,385	94.9	3,465	64,900	99%
Vihtavuori N568	87.7	3,120	90.1	3,200	92.6	3,285	95.0	3,370	97.4	3,450	65,000	97%
Alliant Reloder 25	84.3	3,135	86.7	3,215	89.0	3,290	91.3	3,365	93.7	3,445	64,900	98%
Vihtavuori N570	84.3	3,120	86.7	3,195	89.0	3,270	91.3	3,345	93.7	3,425	64,900	93%
Reload Swiss RS76	86.9	3,115	89.3	3,190	91.7	3,265	94.1	3,340	96.5	3,415	65,000	93%
IMR 7828	80.5	3,095	82.7	3,165	85.0	3,240	87.2	3,310	89.4	3,385	64,800	86%
IMR 7977	83.8	3,080	86.1	3,150	88.4	3,225	90.8	3,305	93.1	3,380	64,800	97%
Hodgdon H50BMG	94.3	3,050	96.9	3,130	99.5	3,210	102.2	3,295	104.8	3,375	65,000	103%
Ramshot Magnum	85.4	3,065	87.8	3,140	90.2	3,220	92.5	3,290	94.9	3,370	65,000	91%
Hodgdon US 869	95.5	3,015	98.2	3,100	100.8	3,185	103.4	3,270	106.1	3,360	62,500	105%
Hodgdon H4831	78.8	3,070	81.0	3,140	83.2	3,215	85.4	3,285	87.6	3,355	65,000	90%
Winchester StaBALL HD	85.8	3,055	88.2	3,125	90.5	3,200	92.9	3,275	95.3	3,350	64,900	93%
Vihtavuori N165	78.6	3,025	80.8	3,090	82.9	3,155	85.1	3,225	87.3	3,290	64,900	90%

150 gr Bullet · 25" barrel

COAL: 3.570" • Bullet length: 1.290" • Seat depth: 0.570" • Usable capacity: 103.9 / 112.6 gr H_2O

Powder	STEP 1 · 90%		STEP 2		STEP 3		STEP 4		STEP 5 · LIMIT			
	gr	fps	gr	fps	gr	fps	gr	fps	gr	fps	psi	Fill
Hodgdon Retumbo	86.9	3,115	89.3	3,190	91.8	3,265	94.2	3,340	96.6	3,420	64,900	97%
IMR 8133	88.4	3,085	90.9	3,160	93.3	3,240	95.8	3,320	98.2	3,395	64,800	98%
Accurate MagPro	85.2	3,085	87.6	3,160	90.0	3,240	92.3	3,315	94.7	3,390	65,000	93%
Ramshot Grand	86.0	3,085	88.4	3,160	90.8	3,235	93.2	3,310	95.6	3,390	64,900	94%
Ramshot LRT	93.8	3,065	96.4	3,145	99.0	3,225	101.6	3,305	104.2	3,390	64,900	102%
Vihtavuori N568	86.1	3,045	88.5	3,120	90.9	3,200	93.3	3,280	95.7	3,360	64,900	95%
Hodgdon H1000	83.9	3,055	86.2	3,130	88.6	3,205	90.9	3,275	93.2	3,350	65,000	97%
Alliant Reloder 22	78.8	3,060	81.0	3,130	83.2	3,200	85.3	3,270	87.5	3,340	64,900	89%
Alliant Reloder 25	82.9	3,040	85.2	3,115	87.5	3,185	89.8	3,260	92.1	3,335	64,800	97%
Hodgdon US 869	95.4	2,990	98.1	3,070	100.7	3,155	103.3	3,240	106.0	3,325	64,800	105%
Vihtavuori N570	82.2	3,020	84.5	3,090	86.8	3,165	89.0	3,235	91.3	3,305	65,000	90%
Alliant Reloder 33	90.5	2,985	93.0	3,060	95.5	3,140	98.0	3,215	100.5	3,295	63,600	105%
Reload Swiss RS76	85.2	3,010	87.6	3,080	90.0	3,150	92.3	3,220	94.7	3,295	64,800	92%
Hodgdon H50BMG	92.8	2,965	95.4	3,040	97.9	3,115	100.5	3,195	103.1	3,275	65,000	101%
IMR 7828	78.8	2,995	81.0	3,060	83.2	3,130	85.4	3,200	87.6	3,270	64,900	85%
IMR 7977	82.4	2,985	84.7	3,055	87.0	3,130	89.2	3,195	91.5	3,270	64,800	96%
Ramshot Magnum	84.0	2,980	86.3	3,050	88.7	3,125	91.0	3,200	93.3	3,270	65,000	90%
Hodgdon H4831	77.2	2,970	79.3	3,035	81.5	3,100	83.7	3,170	85.8	3,240	65,000	89%
Vihtavuori 24N41	87.2	2,925	89.6	2,995	92.1	3,075	94.5	3,150	96.9	3,225	64,800	95%
Vihtavuori N165	76.8	2,910	78.9	2,975	81.0	3,035	83.2	3,105	85.3	3,170	64,800	88%

160 gr Bullet · 25" barrel

COAL: 3.575" • Bullet length: 1.386" • Seat depth: 0.661" • Usable capacity: 102.5 / 112.6 gr H_2O

Powder	STEP 1 · 90%		STEP 2		STEP 3		STEP 4		STEP 5 · LIMIT			
	gr	fps	gr	fps	gr	fps	gr	fps	gr	fps	psi	Fill
Hodgdon Retumbo	84.8	3,020	87.2	3,090	89.5	3,160	91.8	3,235	94.2	3,310	64,900	96%
IMR 8133	86.5	3,000	88.9	3,075	91.3	3,150	93.7	3,225	96.1	3,300	64,800	97%
Accurate MagPro	83.3	3,000	85.6	3,070	87.9	3,145	90.3	3,220	92.6	3,295	64,900	92%
Ramshot LRT	91.8	2,985	94.3	3,060	96.9	3,135	99.5	3,215	102.0	3,295	65,000	101%
Ramshot Grand	84.2	2,995	86.5	3,065	88.8	3,140	91.2	3,215	93.5	3,285	64,900	93%
Vihtavuori N568	84.2	2,975	86.5	3,045	88.9	3,125	91.3	3,200	93.6	3,280	65,000	94%
Hodgdon US 869	93.6	2,925	96.2	3,005	98.8	3,085	101.4	3,165	104.0	3,250	64,900	104%
Hodgdon H1000	81.8	2,965	84.1	3,035	86.3	3,100	88.6	3,175	90.9	3,245	65,000	96%
Alliant Reloder 25	81.0	2,955	83.3	3,025	85.5	3,095	87.8	3,165	90.0	3,235	64,800	96%
Alliant Reloder 26	78.1	2,960	80.3	3,030	82.4	3,095	84.6	3,165	86.8	3,235	64,900	85%
Alliant Reloder 22	76.7	2,960	78.8	3,025	81.0	3,095	83.1	3,160	85.2	3,230	64,900	88%
Alliant Reloder 33	89.1	2,920	91.6	2,995	94.0	3,070	96.5	3,145	99.0	3,225	64,900	105%
Reload Swiss RS76	83.3	2,915	85.6	2,985	87.9	3,055	90.2	3,120	92.5	3,190	64,900	91%
Hodgdon H50BMG	90.6	2,880	93.1	2,955	95.7	3,030	98.2	3,105	100.7	3,180	64,900	100%
IMR 7977	80.5	2,895	82.7	2,965	85.0	3,035	87.2	3,105	89.4	3,170	64,900	95%
IMR 7828	76.8	2,900	78.9	2,965	81.0	3,030	83.2	3,100	85.3	3,165	64,900	84%
Vihtavuori 24N41	85.2	2,850	87.6	2,925	90.0	2,995	92.3	3,070	94.7	3,145	64,900	94%
Winchester StaBALL HD	82.1	2,865	84.4	2,930	86.7	3,000	88.9	3,065	91.2	3,135	64,900	91%
Hodgdon H4831	75.2	2,870	77.3	2,935	79.3	3,000	81.4	3,065	83.5	3,130	64,800	87%
Vihtavuori N165	74.7	2,810	76.8	2,875	78.8	2,935	80.9	2,995	83.0	3,060	64,900	87%

168 gr Bullet · 25" barrel

COAL: 3.600" • Bullet length: 1.441" • Seat depth: 0.691" • Usable capacity: 102.1 / 112.6 gr H_2O

Powder	STEP 1 · 90%		STEP 2		STEP 3		STEP 4		STEP 5 · LIMIT			
	gr	fps	gr	fps	gr	fps	gr	fps	gr	fps	psi	Fill
IMR 8133	85.5	2,940	87.9	3,015	90.3	3,090	92.6	3,160	95.0	3,235	64,900	97%
Hodgdon Retumbo	83.5	2,950	85.8	3,015	88.2	3,090	90.5	3,160	92.8	3,230	64,900	95%
Accurate MagPro	82.4	2,945	84.7	3,015	87.0	3,085	89.2	3,155	91.5	3,225	64,900	91%
Ramshot LRT	90.6	2,925	93.1	2,995	95.7	3,075	98.2	3,150	100.7	3,225	64,800	100%
Vihtavuori N568	83.2	2,925	85.5	2,995	87.8	3,070	90.1	3,145	92.4	3,220	65,000	94%
Ramshot Grand	83.2	2,935	85.5	3,005	87.8	3,075	90.1	3,145	92.4	3,215	65,000	92%
Hodgdon US 869	92.6	2,880	95.2	2,955	97.8	3,035	100.3	3,115	102.9	3,200	64,900	104%
Hodgdon H1000	80.6	2,895	82.8	2,965	85.0	3,030	87.3	3,100	89.5	3,170	64,800	95%
Alliant Reloder 25	80.0	2,895	82.2	2,960	84.5	3,030	86.7	3,100	88.9	3,165	64,900	95%
Alliant Reloder 22	75.5	2,890	77.6	2,955	79.7	3,020	81.8	3,085	83.9	3,150	65,000	87%
Alliant Reloder 19	74.2	2,880	76.3	2,950	78.3	3,010	80.4	3,075	82.4	3,140	64,900	86%
Hodgdon H50BMG	89.5	2,825	92.0	2,895	94.5	2,970	96.9	3,040	99.4	3,115	64,800	99%
Reload Swiss RS76	82.1	2,850	84.4	2,915	86.7	2,985	88.9	3,050	91.2	3,115	64,900	90%
Ramshot Magnum	80.9	2,840	83.2	2,910	85.4	2,975	87.7	3,045	89.9	3,110	64,900	88%
IMR 7977	79.4	2,835	81.6	2,900	83.8	2,970	86.0	3,035	88.2	3,100	64,900	94%
IMR 7828	75.6	2,835	77.7	2,900	79.8	2,965	81.9	3,030	84.0	3,095	64,900	83%
IMR 4955	73.1	2,835	75.1	2,895	77.2	2,960	79.2	3,025	81.2	3,085	64,800	80%
Vihtavuori 24N41	84.1	2,800	86.4	2,870	88.8	2,940	91.1	3,010	93.4	3,085	64,900	93%
Hodgdon Hybrid 100V	69.4	2,830	71.3	2,890	73.3	2,955	75.2	3,015	77.1	3,075	65,000	85%
Hodgdon H4831	74.1	2,805	76.1	2,870	78.2	2,930	80.3	2,995	82.3	3,055	64,900	87%

175 gr Bullet · 25" barrel

COAL: 3.570" • Bullet length: 1.456" • Seat depth: 0.735" • Usable capacity: 101.4 / 112.6 gr H_2O

Powder	STEP 1 · 90%		STEP 2		STEP 3		STEP 4		STEP 5 · LIMIT			
	gr	fps	gr	fps	gr	fps	gr	fps	gr	fps	psi	Fill
IMR 8133	84.4	2,890	86.8	2,960	89.1	3,030	91.5	3,105	93.8	3,175	65,000	96%
Accurate MagPro	81.3	2,890	83.5	2,955	85.8	3,025	88.0	3,095	90.3	3,165	65,000	91%
Ramshot LRT	89.4	2,870	91.9	2,940	94.3	3,015	96.8	3,085	99.3	3,165	64,800	100%
Vihtavuori N568	81.9	2,870	84.2	2,945	86.5	3,015	88.7	3,085	91.0	3,160	64,900	93%
Hodgdon Retumbo	82.1	2,880	84.4	2,950	86.7	3,020	88.9	3,085	91.2	3,155	64,800	94%
Ramshot Grand	82.0	2,875	84.3	2,945	86.5	3,010	88.8	3,080	91.1	3,150	65,000	92%
Hodgdon US 869	91.5	2,835	94.0	2,910	96.6	2,990	99.2	3,070	101.7	3,145	65,000	103%
Alliant Reloder 25	78.8	2,835	81.0	2,900	83.2	2,965	85.4	3,035	87.6	3,100	64,900	94%
Hodgdon H1000	79.3	2,835	81.5	2,900	83.7	2,965	85.9	3,035	88.1	3,100	64,800	94%
Alliant Reloder 33	86.8	2,810	89.2	2,880	91.6	2,950	94.0	3,025	96.4	3,095	64,900	103%
Alliant Reloder 22	74.3	2,830	76.3	2,890	78.4	2,955	80.5	3,020	82.5	3,080	65,000	86%
Alliant Reloder 19	73.0	2,820	75.0	2,880	77.0	2,945	79.1	3,010	81.1	3,070	64,900	85%
Vihtavuori N570	76.8	2,800	78.9	2,865	81.0	2,925	83.2	2,990	85.3	3,055	64,900	87%
Hodgdon H50BMG	88.2	2,770	90.7	2,840	93.1	2,910	95.5	2,980	98.0	3,050	64,900	98%
Ramshot Magnum	79.7	2,785	81.9	2,850	84.2	2,920	86.4	2,985	88.6	3,050	64,900	88%
Reload Swiss RS76	80.8	2,785	83.0	2,850	85.3	2,915	87.5	2,980	89.8	3,050	64,900	89%
IMR 7977	78.2	2,775	80.4	2,840	82.6	2,905	84.7	2,970	86.9	3,040	64,900	93%
IMR 7828	74.3	2,775	76.4	2,835	78.4	2,895	80.5	2,960	82.6	3,025	64,900	82%
Reload Swiss RS70	72.8	2,775	74.8	2,835	76.8	2,900	78.9	2,960	80.9	3,025	64,900	80%
Vihtavuori 24N41	82.8	2,750	85.1	2,820	87.4	2,885	89.7	2,955	92.0	3,025	64,800	92%

7mm STW

Layne Simpson was a field editor for Shooting Times magazine. He developed the 7mm Shooting Times Westerner (7mm STW) as a wildcat. To create it he necked the full-length 8mm Remington Magnum belted case down to hold .284-inch bullets. He introduced it to the public in a 1988 Shooting Times article. A-Square began loading ammunition in 1994. SAAMI recognized the cartridge in 1996. Remington introduced factory rifles and ammunition in 1997.

Remington's initial factory load drove a 140-grain Core-Lokt bullet at a listed 3,325 fps. Loads with 140- to 160-grain bullets give velocities of roughly 3,050 to 3,380 fps from a 26-inch barrel. The cartridge was designed for long shots at deer, elk and similar game in open country. It sold well after its commercial introduction. Interest has since declined. Federal and smaller manufacturers still offer ammunition. The 7mm STW also remains a handloader's option.

Cartridge specifications	
Bullet Diameter	**0.284" (7.21 mm)**
Max Case Length	**2.850" (72.39 mm)**
Case Trim Length	**2.840" (72.14 mm)**
Max COAL	**3.600" (91.44 mm)**
Primer Pocket	**Large Rifle**
Standard Twist	**1:9"**
Case Capacity	**97.4 gr H_2O**
Max Pressure	**65,000 psi (SAAMI)**

120 gr Bullet · 25" barrel

COAL: 3.585" • Bullet length: 1.097" • Seat depth: 0.362" • Usable capacity: 91.9 / 97.4 gr H_2O

Powder	STEP 1 · 90%		STEP 2		STEP 3		STEP 4		STEP 5 · LIMIT			
	gr	fps	gr	fps	gr	fps	gr	fps	gr	fps	psi	Fill
Alliant Reloder 23	75.3	3,390	77.4	3,470	79.5	3,550	81.6	3,630	83.7	3,710	64,800	99%
Alliant Reloder 26	77.7	3,360	79.8	3,440	82.0	3,525	84.2	3,610	86.3	3,690	64,900	94%
Ramshot Grand	81.0	3,310	83.3	3,395	85.5	3,480	87.8	3,570	90.0	3,655	64,900	100%
IMR 8133	82.6	3,250	84.9	3,340	87.2	3,430	89.5	3,520	91.8	3,610	64,900	104%
Hodgdon H4831SC	74.4	3,280	76.5	3,360	78.6	3,440	80.6	3,515	82.7	3,595	65,000	91%
Vihtavuori N570	80.6	3,245	82.8	3,330	85.1	3,415	87.3	3,505	89.6	3,595	64,900	100%
Accurate MagPro	79.3	3,250	81.5	3,335	83.7	3,420	85.9	3,505	88.1	3,590	64,800	98%
Alliant Reloder 22	73.5	3,265	75.5	3,340	77.6	3,420	79.7	3,500	81.7	3,580	64,900	94%
IMR 7828SSC	75.0	3,260	77.1	3,335	79.2	3,415	81.2	3,490	83.3	3,575	64,900	94%
Reload Swiss RS76	80.5	3,250	82.7	3,330	85.0	3,410	87.2	3,490	89.4	3,575	64,900	98%
Hodgdon H1000	77.7	3,215	79.8	3,295	82.0	3,380	84.2	3,460	86.3	3,545	64,900	102%
Vihtavuori N560	73.8	3,240	75.8	3,310	77.9	3,385	80.0	3,460	82.0	3,535	64,900	93%
Winchester Supreme 780	75.8	3,205	77.9	3,285	80.0	3,365	82.1	3,445	84.2	3,525	64,800	92%
Alliant Reloder 19	71.0	3,200	73.0	3,275	75.0	3,355	76.9	3,425	78.9	3,505	64,900	91%
IMR 4831	69.4	3,205	71.3	3,275	73.3	3,355	75.2	3,430	77.1	3,505	64,900	90%
IMR 7828	74.3	3,195	76.3	3,270	78.4	3,350	80.5	3,430	82.5	3,505	65,000	90%
Vihtavuori N165	74.0	3,200	76.0	3,270	78.1	3,350	80.2	3,425	82.2	3,500	64,900	96%
Hodgdon H4831	71.9	3,160	73.9	3,235	75.9	3,310	77.9	3,385	79.9	3,460	64,800	93%
Vihtavuori N160	69.0	3,165	70.9	3,235	72.8	3,305	74.8	3,380	76.7	3,450	64,800	91%
Vihtavuori N170	77.0	3,155	79.2	3,230	81.3	3,305	83.4	3,375	85.6	3,450	64,900	97%

140 gr Bullet · 25" barrel

COAL: 3.600" • Bullet length: 1.261" • Seat depth: 0.511" • Usable capacity: 89.5 / 97.4 gr H_2O

Powder	STEP 1 · 90%		STEP 2		STEP 3		STEP 4		STEP 5 · LIMIT			
	gr	fps	gr	fps	gr	fps	gr	fps	gr	fps	psi	Fill
Alliant Reloder 23	71.5	3,165	73.5	3,235	75.5	3,310	77.4	3,380	79.4	3,455	64,900	96%
Alliant Reloder 26	73.8	3,150	75.8	3,225	77.9	3,300	80.0	3,380	82.0	3,455	64,900	92%
Ramshot Grand	77.7	3,125	79.8	3,200	82.0	3,280	84.2	3,365	86.3	3,440	64,900	98%
IMR 8133	79.3	3,095	81.5	3,170	83.7	3,255	85.9	3,335	88.1	3,420	65,000	102%
Accurate MagPro	76.1	3,085	78.2	3,160	80.3	3,235	82.4	3,315	84.5	3,395	64,900	96%
Vihtavuori N570	76.4	3,080	78.5	3,160	80.7	3,240	82.8	3,315	84.9	3,395	64,900	98%
Ramshot Magnum	77.4	3,050	79.6	3,130	81.7	3,205	83.8	3,280	86.0	3,365	65,000	96%
Alliant Reloder 22	69.8	3,060	71.8	3,135	73.7	3,205	75.6	3,275	77.6	3,350	64,800	92%
Reload Swiss RS76	76.9	3,050	79.0	3,125	81.2	3,200	83.3	3,275	85.4	3,350	64,800	96%
Ramshot LRT	83.1	3,015	85.4	3,095	87.7	3,180	90.0	3,260	92.3	3,345	62,300	105%
Winchester StaBALL HD	77.6	3,035	79.8	3,110	81.9	3,185	84.0	3,260	86.2	3,340	64,900	98%
Hodgdon H1000	74.2	3,040	76.3	3,115	78.3	3,185	80.4	3,260	82.4	3,335	65,000	100%
Hodgdon Retumbo	75.2	3,035	77.3	3,105	79.3	3,180	81.4	3,255	83.5	3,330	64,800	97%
Vihtavuori N568	77.2	2,995	79.3	3,075	81.5	3,160	83.7	3,245	85.8	3,325	64,900	99%
Alliant Reloder 25	72.7	3,005	74.7	3,075	76.8	3,150	78.8	3,225	80.8	3,300	65,000	98%
Vihtavuori N565	71.6	3,010	73.6	3,080	75.6	3,150	77.6	3,220	79.6	3,295	65,000	93%
IMR 7828	70.3	3,000	72.3	3,075	74.2	3,140	76.1	3,210	78.1	3,285	64,900	88%
Hodgdon H50BMG	83.1	2,950	85.4	3,025	87.7	3,105	90.0	3,185	92.3	3,270	62,400	105%
Vihtavuori N165	69.9	2,980	71.9	3,050	73.8	3,115	75.8	3,185	77.7	3,255	64,900	93%
Hodgdon H4831	68.2	2,960	70.1	3,030	72.0	3,100	73.9	3,165	75.8	3,235	64,900	91%

150 gr Bullet · 25" barrel

COAL: 3.560" • Bullet length: 1.300" • Seat depth: 0.590" • Usable capacity: 88.4 / 97.4 gr H_2O

Powder	STEP 1 · 90%		STEP 2		STEP 3		STEP 4		STEP 5 · LIMIT			
	gr	fps	gr	fps	gr	fps	gr	fps	gr	fps	psi	Fill
Alliant Reloder 26	71.9	3,050	73.9	3,125	75.9	3,195	77.9	3,270	79.9	3,340	64,900	91%
Ramshot Grand	76.1	3,040	78.2	3,115	80.3	3,190	82.4	3,265	84.5	3,340	65,000	97%
Alliant Reloder 23	69.6	3,055	71.5	3,120	73.4	3,190	75.4	3,265	77.3	3,330	64,900	95%
IMR 8133	77.6	3,010	79.8	3,090	81.9	3,165	84.0	3,240	86.2	3,320	64,800	101%
Accurate MagPro	74.5	3,000	76.6	3,075	78.7	3,150	80.7	3,225	82.8	3,305	65,000	96%
Vihtavuori N570	74.3	2,995	76.3	3,070	78.4	3,145	80.5	3,220	82.5	3,290	65,000	96%
Ramshot LRT	82.0	2,960	84.3	3,040	86.5	3,115	88.8	3,200	91.1	3,280	63,700	105%
Reload Swiss RS76	75.2	2,960	77.3	3,030	79.3	3,100	81.4	3,175	83.5	3,245	64,900	95%
Alliant Reloder 22	68.0	2,965	69.9	3,030	71.8	3,100	73.7	3,170	75.6	3,235	64,800	91%
Hodgdon H1000	72.5	2,950	74.5	3,020	76.5	3,090	78.5	3,165	80.5	3,235	65,000	99%
IMR 7828SSC	69.2	2,960	71.1	3,025	73.1	3,095	75.0	3,165	76.9	3,235	65,000	90%
Winchester StaBALL HD	75.8	2,945	77.9	3,015	80.0	3,090	82.1	3,165	84.2	3,235	64,800	97%
Hodgdon Retumbo	73.4	2,940	75.5	3,015	77.5	3,085	79.5	3,155	81.6	3,230	64,900	96%
Hodgdon H50BMG	82.0	2,895	84.3	2,975	86.5	3,045	88.8	3,125	91.1	3,210	63,900	105%
Alliant Reloder 25	71.1	2,920	73.1	2,990	75.0	3,055	77.0	3,130	79.0	3,200	65,000	98%
Alliant Reloder 19	66.1	2,920	67.9	2,990	69.8	3,060	71.6	3,125	73.4	3,190	64,800	88%
IMR 7828	68.5	2,910	70.4	2,975	72.3	3,045	74.2	3,110	76.1	3,180	65,000	87%
Accurate 3100	66.8	2,895	68.7	2,960	70.5	3,025	72.3	3,090	74.2	3,160	64,900	91%
IMR 7977	71.1	2,875	73.1	2,945	75.0	3,010	77.0	3,080	79.0	3,155	65,000	97%
Hodgdon H4831	66.4	2,865	68.3	2,935	70.1	2,995	72.0	3,065	73.8	3,130	64,900	90%

160 gr Bullet · 25" barrel

COAL: 3.600" • Bullet length: 1.402" • Seat depth: 0.652" • Usable capacity: 87.4 / 97.4 gr H_2O

Powder	STEP 1 · 90%		STEP 2		STEP 3		STEP 4		STEP 5 · LIMIT			
	gr	fps	gr	fps	gr	fps	gr	fps	gr	fps	psi	Fill
Ramshot Grand	74.5	2,950	76.6	3,020	78.7	3,095	80.7	3,165	82.8	3,240	64,900	96%
IMR 8133	76.1	2,930	78.2	3,005	80.3	3,080	82.5	3,160	84.6	3,235	64,900	101%
Alliant Reloder 26	70.1	2,955	72.0	3,020	74.0	3,090	76.0	3,165	77.9	3,230	64,900	89%
Alliant Reloder 23	67.8	2,950	69.7	3,015	71.5	3,080	73.4	3,145	75.3	3,215	65,000	93%
Ramshot LRT	80.9	2,905	83.2	2,980	85.4	3,055	87.7	3,135	89.9	3,215	64,900	105%
Accurate MagPro	73.0	2,920	75.0	2,990	77.0	3,060	79.1	3,135	81.1	3,210	64,800	95%
Vihtavuori N570	72.1	2,905	74.1	2,975	76.1	3,045	78.1	3,115	80.1	3,185	65,000	94%
Ramshot Magnum	74.2	2,895	76.3	2,965	78.3	3,035	80.4	3,110	82.4	3,180	65,000	95%
Vihtavuori N568	74.0	2,875	76.0	2,945	78.1	3,020	80.2	3,100	82.2	3,175	64,800	97%
Reload Swiss RS76	73.5	2,870	75.5	2,935	77.6	3,005	79.7	3,075	81.7	3,145	64,900	94%
Winchester StaBALL HD	74.2	2,860	76.3	2,930	78.3	3,000	80.4	3,070	82.4	3,140	64,900	96%
Hodgdon H1000	70.7	2,860	72.7	2,925	74.7	2,995	76.6	3,065	78.6	3,135	64,800	98%
Hodgdon H50BMG	80.7	2,835	83.0	2,910	85.2	2,980	87.5	3,060	89.7	3,135	64,900	104%
Alliant Reloder 22	66.3	2,865	68.2	2,935	70.0	2,995	71.8	3,060	73.7	3,130	64,800	90%
Hodgdon Retumbo	71.8	2,855	73.8	2,925	75.8	2,990	77.8	3,060	79.8	3,130	65,000	95%
Alliant Reloder 25	69.6	2,835	71.5	2,900	73.4	2,970	75.4	3,040	77.3	3,105	64,900	96%
Alliant Reloder 19	64.6	2,835	66.4	2,900	68.2	2,965	70.0	3,030	71.8	3,095	64,900	87%
IMR 7828	66.7	2,815	68.5	2,880	70.4	2,945	72.3	3,015	74.1	3,075	64,800	85%
IMR 7977	69.6	2,795	71.5	2,860	73.4	2,925	75.4	2,995	77.3	3,060	65,000	96%
Hodgdon H4831	64.8	2,775	66.6	2,835	68.4	2,900	70.2	2,965	72.0	3,025	65,000	88%

168 gr Bullet · 25" barrel

COAL: 3.600" • Bullet length: 1.441" • Seat depth: 0.691" • Usable capacity: 86.9 / 97.4 gr H_2O

Powder	STEP 1 · 90%		STEP 2		STEP 3		STEP 4		STEP 5 · LIMIT			
	gr	fps	gr	fps	gr	fps	gr	fps	gr	fps	psi	Fill
Ramshot Grand	73.5	2,890	75.5	2,955	77.6	3,030	79.7	3,105	81.7	3,175	64,900	96%
IMR 8133	75.2	2,880	77.3	2,950	79.3	3,020	81.4	3,095	83.5	3,170	64,900	100%
Alliant Reloder 26	68.9	2,885	70.8	2,950	72.8	3,020	74.7	3,090	76.6	3,155	65,000	89%
Ramshot LRT	79.9	2,850	82.1	2,925	84.3	3,000	86.6	3,080	88.8	3,155	65,000	104%
Accurate MagPro	72.1	2,865	74.1	2,935	76.1	3,005	78.1	3,075	80.1	3,150	64,900	94%
Alliant Reloder 23	66.5	2,875	68.3	2,935	70.2	3,000	72.1	3,070	73.9	3,130	64,900	92%
Ramshot Magnum	73.1	2,840	75.1	2,905	77.2	2,980	79.2	3,045	81.2	3,120	64,800	94%
Vihtavuori N568	73.0	2,830	75.0	2,900	77.0	2,970	79.1	3,050	81.1	3,120	64,900	97%
Vihtavuori N570	70.7	2,840	72.7	2,910	74.6	2,975	76.5	3,040	78.5	3,110	64,900	93%
Hodgdon H50BMG	79.7	2,785	81.9	2,855	84.1	2,925	86.3	3,000	88.5	3,075	64,800	104%
Reload Swiss RS76	72.5	2,810	74.5	2,875	76.5	2,940	78.5	3,005	80.5	3,075	64,800	93%
Winchester StaBALL HD	73.1	2,800	75.1	2,870	77.2	2,940	79.2	3,005	81.2	3,075	64,800	95%
Hodgdon H1000	69.7	2,800	71.6	2,865	73.6	2,935	75.5	3,000	77.4	3,065	64,800	97%
Hodgdon Retumbo	70.7	2,795	72.7	2,860	74.7	2,930	76.6	2,995	78.6	3,060	65,000	94%
Alliant Reloder 22	65.3	2,805	67.1	2,870	68.9	2,930	70.7	2,995	72.5	3,055	64,900	89%
Alliant Reloder 25	68.6	2,780	70.5	2,845	72.4	2,910	74.3	2,975	76.2	3,040	64,900	96%
Alliant Reloder 19	63.6	2,775	65.4	2,835	67.2	2,900	68.9	2,965	70.7	3,025	64,900	86%
Hodgdon US 869	79.7	2,720	81.9	2,795	84.2	2,870	86.4	2,950	88.6	3,025	63,700	105%
IMR 7828	65.6	2,755	67.4	2,815	69.3	2,885	71.1	2,945	72.9	3,010	64,900	84%
Hodgdon H4831	63.7	2,710	65.5	2,775	67.3	2,835	69.0	2,895	70.8	2,955	65,000	87%

175 gr Bullet · 25" barrel

COAL: 3.585" • Bullet length: 1.456" • Seat depth: 0.720" • Usable capacity: 86.4 / 97.4 gr H_2O

Powder	STEP 1 · 90%		STEP 2		STEP 3		STEP 4		STEP 5 · LIMIT			
	gr	fps	gr	fps	gr	fps	gr	fps	gr	fps	psi	Fill
Ramshot Grand	72.6	2,835	74.6	2,900	76.7	2,975	78.7	3,040	80.7	3,115	64,900	95%
IMR 8133	74.3	2,830	76.3	2,895	78.4	2,970	80.5	3,040	82.5	3,110	65,000	99%
Ramshot LRT	78.9	2,800	81.1	2,875	83.3	2,945	85.5	3,020	87.7	3,095	64,900	103%
Accurate MagPro	71.2	2,815	73.2	2,880	75.2	2,950	77.1	3,020	79.1	3,090	65,000	93%
Alliant Reloder 26	67.8	2,825	69.7	2,890	71.5	2,950	73.4	3,015	75.3	3,085	64,900	87%
Vihtavuori N568	72.0	2,785	74.0	2,855	76.0	2,925	78.0	2,995	80.0	3,070	64,800	96%
Ramshot Magnum	72.1	2,785	74.1	2,855	76.1	2,920	78.1	2,990	80.1	3,060	64,800	93%
Vihtavuori N570	69.2	2,775	71.1	2,840	73.1	2,910	75.0	2,975	76.9	3,040	64,800	92%
Hodgdon H50BMG	78.7	2,735	80.9	2,805	83.1	2,875	85.2	2,945	87.4	3,020	64,900	103%
Reload Swiss RS76	71.5	2,750	73.5	2,815	75.5	2,880	77.4	2,940	79.4	3,010	64,900	93%
Winchester StaBALL HD	72.1	2,745	74.1	2,810	76.1	2,880	78.1	2,945	80.1	3,010	65,000	94%
Hodgdon H1000	68.7	2,745	70.6	2,810	72.5	2,870	74.4	2,935	76.3	3,005	64,900	96%
Hodgdon H4831SC	65.3	2,745	67.1	2,810	68.9	2,870	70.7	2,930	72.5	2,995	64,800	84%
Hodgdon Retumbo	69.7	2,740	71.6	2,800	73.6	2,865	75.5	2,930	77.4	2,995	64,900	93%
Hodgdon US 869	79.3	2,700	81.5	2,770	83.7	2,845	85.9	2,920	88.1	2,995	64,800	105%
Alliant Reloder 22	64.2	2,740	66.0	2,805	67.8	2,865	69.5	2,925	71.3	2,985	64,900	88%
IMR 7828SSC	65.3	2,740	67.1	2,800	68.9	2,865	70.7	2,925	72.5	2,985	65,000	87%
Alliant Reloder 25	67.7	2,725	69.6	2,790	71.5	2,855	73.3	2,915	75.2	2,980	65,000	95%
Vihtavuori 24N41	72.5	2,665	74.5	2,735	76.5	2,800	78.6	2,870	80.6	2,940	64,900	95%
Vihtavuori N165	63.9	2,650	65.7	2,710	67.5	2,765	69.2	2,825	71.0	2,885	65,000	88%

183 gr Bullet · 25" barrel

COAL: 3.600" • Bullet length: 1.585" • Seat depth: 0.835" • Usable capacity: 84.9 / 97.4 gr H_2O

Powder	STEP 1 · 90%		STEP 2		STEP 3		STEP 4		STEP 5 · LIMIT			
	gr	fps	gr	fps	gr	fps	gr	fps	gr	fps	psi	Fill
IMR 8133	72.7	2,765	74.7	2,835	76.8	2,905	78.8	2,975	80.8	3,045	65,000	99%
Ramshot Grand	71.1	2,770	73.1	2,835	75.0	2,900	77.0	2,970	79.0	3,040	64,900	95%
Ramshot LRT	77.3	2,745	79.5	2,815	81.6	2,885	83.8	2,960	85.9	3,030	64,900	103%
Accurate MagPro	69.7	2,750	71.6	2,815	73.6	2,885	75.5	2,950	77.4	3,020	64,800	93%
Vihtavuori N568	70.5	2,735	72.5	2,800	74.4	2,870	76.3	2,935	78.3	3,010	64,900	95%
Alliant Reloder 26	66.2	2,755	68.0	2,815	69.8	2,880	71.7	2,945	73.5	3,005	64,800	87%
Ramshot Magnum	70.6	2,725	72.5	2,790	74.5	2,860	76.5	2,925	78.4	2,990	64,800	93%
Alliant Reloder 23	63.8	2,730	65.6	2,795	67.3	2,850	69.1	2,915	70.9	2,975	65,000	91%
Vihtavuori N570	67.5	2,715	69.4	2,780	71.3	2,840	73.1	2,905	75.0	2,970	64,900	91%
Hodgdon H50BMG	77.0	2,675	79.2	2,745	81.3	2,810	83.4	2,880	85.6	2,955	65,000	103%
Hodgdon US 869	77.8	2,650	80.0	2,725	82.1	2,795	84.3	2,870	86.4	2,940	64,800	105%
Winchester StaBALL HD	70.5	2,680	72.5	2,745	74.4	2,810	76.3	2,870	78.3	2,940	64,800	94%
Alliant Reloder 33	73.9	2,665	76.0	2,730	78.0	2,795	80.0	2,865	82.1	2,935	61,400	105%
Reload Swiss RS76	69.9	2,680	71.9	2,745	73.8	2,810	75.8	2,875	77.7	2,935	64,900	92%
Hodgdon H1000	67.1	2,680	69.0	2,740	70.8	2,800	72.7	2,865	74.6	2,930	64,900	95%
Hodgdon Retumbo	68.1	2,670	70.0	2,735	71.9	2,795	73.8	2,860	75.7	2,925	65,000	93%
Alliant Reloder 22	62.6	2,670	64.3	2,730	66.1	2,790	67.8	2,850	69.6	2,910	64,900	87%
Alliant Reloder 25	66.2	2,660	68.0	2,725	69.8	2,785	71.7	2,850	73.5	2,910	64,800	94%
IMR 7828SSC	63.6	2,670	65.4	2,730	67.2	2,790	68.9	2,850	70.7	2,910	64,800	87%
Vihtavuori 24N41	70.9	2,615	72.9	2,680	74.8	2,740	76.8	2,810	78.8	2,875	64,900	95%

7mm Weatherby Magnum

Roy Weatherby developed the 7mm Weatherby Magnum in the early 1940s as one of his first line of magnum cartridges. It is based on the belted .300 H&H Magnum case. The case is shortened and necked down to accept .284-inch bullets. It has Weatherby's characteristic double-radius shoulder. The cartridge appeared about 18 years before the 7mm Remington Magnum of 1962.

The 7mm Weatherby Magnum offers slightly more velocity than the 7mm Remington Magnum with the same bullet weights. Even so the Remington cartridge became far more popular. It was chambered in more widely available and less expensive rifles. The Weatherby round is suitable for deer, elk and moose at extended ranges. Older rifles with a 1:12 twist are generally limited to bullets of about 150 grains. Later rifles with a 1:10 twist stabilize bullets of up to about 175 grains. Ammunition is available from Weatherby and other manufacturers.

Cartridge specifications	
Bullet Diameter	**0.284" (7.21 mm)**
Max Case Length	**2.549" (64.74 mm)**
Case Trim Length	**2.539" (64.49 mm)**
Max COAL	**3.360" (85.34 mm)**
Primer Pocket	**Large Rifle**
Standard Twist	**1:10"**
Case Capacity	**86.8 gr H_2O**
Max Pressure	**65,000 psi (SAAMI)**

120 gr Bullet · 25" barrel

COAL: 3.250" • Bullet length: 1.097" • Seat depth: 0.396" • Usable capacity: 80.7 / 86.8 gr H_2O

Powder	STEP 1 · 90%		STEP 2		STEP 3		STEP 4		STEP 5 · LIMIT			
	gr	fps	gr	fps	gr	fps	gr	fps	gr	fps	psi	Fill
Alliant Reloder 26	71.7	3,255	73.7	3,335	75.7	3,420	77.7	3,500	79.7	3,585	64,900	99%
Alliant Reloder 22	69.8	3,245	71.8	3,325	73.7	3,405	75.6	3,485	77.6	3,570	64,800	102%
Alliant Reloder 23	68.5	3,255	70.4	3,330	72.3	3,410	74.2	3,485	76.1	3,565	64,800	102%
Hodgdon SUPERFORMANCE	67.7	3,245	69.6	3,325	71.5	3,400	73.3	3,475	75.2	3,555	64,800	91%
Ramshot Grand	74.8	3,205	76.9	3,290	78.9	3,375	81.0	3,460	83.1	3,550	64,700	105%
Alliant Reloder 19	68.5	3,220	70.4	3,300	72.3	3,380	74.2	3,465	76.1	3,545	64,800	100%
Vihtavuori N560	70.7	3,235	72.7	3,315	74.7	3,390	76.6	3,465	78.6	3,545	65,000	102%
Hodgdon H4350	64.5	3,225	66.3	3,300	68.1	3,375	69.9	3,450	71.7	3,525	64,800	90%
Reload Swiss RS70	68.8	3,205	70.7	3,285	72.6	3,360	74.5	3,440	76.4	3,520	64,900	96%
Accurate 4350	64.8	3,210	66.6	3,280	68.4	3,355	70.2	3,430	72.0	3,505	65,000	93%
IMR 4831	66.2	3,195	68.0	3,270	69.8	3,350	71.7	3,430	73.5	3,505	64,900	98%
Norma 204	65.5	3,200	67.3	3,275	69.2	3,355	71.0	3,425	72.8	3,505	64,800	95%
Ramshot Hunter	66.0	3,195	67.8	3,270	69.7	3,345	71.5	3,420	73.3	3,495	64,800	97%
Vihtavuori N165	70.4	3,185	72.4	3,265	74.3	3,340	76.3	3,420	78.2	3,495	64,900	104%
IMR 4350	64.0	3,185	65.8	3,255	67.5	3,325	69.3	3,400	71.1	3,475	64,900	95%
Hodgdon H4831SC	68.1	3,160	70.0	3,235	71.9	3,315	73.8	3,390	75.7	3,470	64,900	94%
Alliant Reloder 16	62.3	3,170	64.0	3,240	65.8	3,310	67.5	3,380	69.2	3,450	64,800	95%
Winchester StaBALL HD	74.8	3,100	76.9	3,180	78.9	3,260	81.0	3,345	83.1	3,430	61,900	105%
IMR 4451	63.2	3,135	65.0	3,210	66.7	3,280	68.5	3,355	70.2	3,425	65,000	90%
IMR 4064	55.7	3,095	57.3	3,160	58.8	3,225	60.4	3,290	61.9	3,350	65,000	82%

130 gr Bullet · 25" barrel

COAL: 2.710" • Bullet length: 1.060" • Seat depth: 0.899" • Usable capacity: 75.0 / 86.8 gr H_2O

Powder	STEP 1 · 90%		STEP 2		STEP 3		STEP 4		STEP 5 · LIMIT			
	gr	fps	gr	fps	gr	fps	gr	fps	gr	fps	psi	Fill
Alliant Reloder 26	67.7	3,140	69.6	3,215	71.5	3,295	73.3	3,375	75.2	3,455	64,900	101%
Alliant Reloder 22	65.9	3,125	67.7	3,200	69.6	3,280	71.4	3,360	73.2	3,435	64,900	104%
Alliant Reloder 23	64.6	3,125	66.4	3,200	68.2	3,275	70.0	3,350	71.8	3,430	64,800	104%
Hodgdon SUPERFORMANCE	64.0	3,125	65.8	3,200	67.5	3,270	69.3	3,345	71.1	3,425	64,900	93%
Vihtavuori N560	66.9	3,120	68.8	3,195	70.6	3,265	72.5	3,340	74.3	3,415	65,000	104%
Alliant Reloder 19	64.5	3,100	66.3	3,175	68.1	3,255	69.9	3,330	71.7	3,410	64,800	102%
Hodgdon Hybrid 100V	60.5	3,105	62.2	3,175	63.9	3,250	65.5	3,320	67.2	3,395	64,900	101%
IMR 4831	62.4	3,070	64.1	3,145	65.8	3,220	67.6	3,295	69.3	3,370	64,900	99%
Accurate 4350	61.1	3,080	62.8	3,150	64.5	3,225	66.2	3,295	67.9	3,365	64,900	95%
IMR 7828SSC	65.6	3,055	67.4	3,130	69.3	3,210	71.1	3,285	72.9	3,360	64,900	101%
Winchester StaBALL 6.5	60.8	3,075	62.5	3,140	64.2	3,210	65.9	3,280	67.6	3,350	64,800	91%
Winchester Supreme 780	67.2	3,035	69.1	3,115	71.0	3,195	72.8	3,270	74.7	3,350	64,800	100%
Reload Swiss RS76	70.2	3,030	72.2	3,110	74.1	3,185	76.0	3,260	78.0	3,345	62,500	105%
Vihtavuori N165	66.0	3,050	67.8	3,120	69.7	3,195	71.5	3,270	73.3	3,345	63,900	105%
Hodgdon H4831SC	64.3	3,040	66.1	3,115	67.8	3,185	69.6	3,260	71.4	3,340	65,000	96%
IMR 4350	60.2	3,055	61.9	3,125	63.6	3,195	65.2	3,265	66.9	3,335	64,900	96%
Ramshot Magnum	70.6	3,000	72.5	3,075	74.5	3,155	76.5	3,240	78.4	3,320	62,400	105%
Accurate MagPro	68.3	2,995	70.2	3,075	72.1	3,155	74.0	3,235	75.9	3,315	64,900	103%
Accurate 3100	63.9	3,010	65.7	3,085	67.5	3,160	69.2	3,230	71.0	3,310	64,800	103%
Alliant Reloder 16	58.6	3,040	60.2	3,105	61.8	3,170	63.5	3,240	65.1	3,305	64,900	96%

140 gr Bullet · 25" barrel

COAL: 3.285" • Bullet length: 1.179" • Seat depth: 0.443" • Usable capacity: 80.0 / 86.8 gr H_2O

Powder	STEP 1 · 90%		STEP 2		STEP 3		STEP 4		STEP 5 · LIMIT			
	gr	fps	gr	fps	gr	fps	gr	fps	gr	fps	psi	Fill
Alliant Reloder 26	69.0	3,070	70.9	3,145	72.8	3,220	74.8	3,300	76.7	3,375	64,900	96%
Vihtavuori N570	73.4	3,050	75.5	3,130	77.5	3,210	79.5	3,290	81.6	3,375	64,800	105%
Ramshot Grand	72.6	3,045	74.6	3,120	76.7	3,200	78.7	3,280	80.7	3,360	64,900	103%
Alliant Reloder 22	67.2	3,060	69.1	3,130	71.0	3,205	72.8	3,280	74.7	3,355	64,900	99%
Alliant Reloder 19	66.2	3,050	68.0	3,120	69.8	3,195	71.7	3,270	73.5	3,345	64,900	98%
Hodgdon Retumbo	72.5	3,030	74.5	3,105	76.5	3,180	78.5	3,260	80.5	3,340	65,000	105%
Alliant Reloder 23	65.7	3,045	67.5	3,115	69.3	3,185	71.2	3,255	73.0	3,330	64,800	99%
Reload Swiss RS62	64.4	3,030	66.2	3,105	68.0	3,175	69.7	3,245	71.5	3,315	64,900	93%
IMR 4831	63.9	3,010	65.7	3,085	67.5	3,155	69.2	3,225	71.0	3,300	64,900	95%
Winchester StaBALL HD	73.5	2,985	75.5	3,060	77.6	3,135	79.7	3,220	81.7	3,295	64,800	104%
Hodgdon H4831	66.7	3,000	68.5	3,070	70.4	3,140	72.3	3,215	74.1	3,290	64,900	99%
Hodgdon H4350	61.6	3,010	63.3	3,080	65.0	3,145	66.7	3,215	68.4	3,280	64,900	86%
Vihtavuori N560	67.0	3,010	68.8	3,075	70.7	3,145	72.6	3,215	74.4	3,280	64,900	97%
Alliant Reloder 25	69.3	2,975	71.2	3,050	73.2	3,125	75.1	3,200	77.0	3,275	63,200	105%
IMR 7828SSC	66.7	2,985	68.5	3,055	70.4	3,130	72.3	3,205	74.1	3,275	64,800	96%
Accurate MagPro	70.2	2,960	72.2	3,040	74.1	3,115	76.0	3,190	78.0	3,270	64,800	100%
Norma MRP	66.1	2,985	67.9	3,055	69.8	3,130	71.6	3,200	73.4	3,270	64,900	95%
Accurate 4350	61.9	2,985	63.6	3,055	65.3	3,120	67.1	3,190	68.8	3,260	64,800	90%
Ramshot Hunter	63.3	2,985	65.0	3,050	66.8	3,120	68.5	3,185	70.3	3,255	64,800	93%
IMR 4350	61.0	2,965	62.7	3,030	64.4	3,095	66.1	3,165	67.8	3,230	64,900	91%

150 gr Bullet · 25" barrel

COAL: 3.250" • Bullet length: 1.260" • Seat depth: 0.558" • Usable capacity: 78.3 / 86.8 gr H_2O

Powder	STEP 1 · 90%		STEP 2		STEP 3		STEP 4		STEP 5 · LIMIT			
	gr	fps	gr	fps	gr	fps	gr	fps	gr	fps	psi	Fill
Vihtavuori N570	71.3	2,970	73.3	3,050	75.3	3,125	77.2	3,200	79.2	3,280	64,900	104%
Alliant Reloder 26	67.0	2,975	68.8	3,045	70.7	3,115	72.6	3,190	74.4	3,260	64,800	95%
Ramshot Grand	70.7	2,950	72.7	3,030	74.7	3,105	76.6	3,180	78.6	3,260	64,900	102%
Alliant Reloder 22	65.3	2,960	67.1	3,030	68.9	3,100	70.7	3,170	72.5	3,245	65,000	98%
Alliant Reloder 19	64.3	2,955	66.1	3,025	67.8	3,090	69.6	3,165	71.4	3,235	64,900	97%
Hodgdon Retumbo	70.5	2,935	72.5	3,010	74.4	3,085	76.3	3,155	78.3	3,235	64,900	104%
Ramshot Magnum	71.6	2,925	73.6	3,000	75.5	3,075	77.5	3,150	79.5	3,230	65,000	102%
Reload Swiss RS76	70.8	2,910	72.8	2,985	74.8	3,060	76.7	3,130	78.7	3,205	64,800	101%
Vihtavuori N565	67.3	2,915	69.2	2,985	71.0	3,055	72.9	3,125	74.8	3,200	64,900	100%
IMR 4831	62.1	2,915	63.8	2,980	65.5	3,050	67.3	3,120	69.0	3,190	64,800	95%
IMR 4955	63.0	2,905	64.8	2,975	66.5	3,040	68.3	3,110	70.0	3,180	64,900	90%
Winchester Supreme 780	66.6	2,895	68.4	2,965	70.3	3,035	72.2	3,110	74.0	3,180	64,900	95%
Hodgdon H4831	64.6	2,895	66.4	2,965	68.2	3,035	70.0	3,105	71.8	3,175	64,800	98%
Hodgdon H4350	59.6	2,900	61.3	2,970	62.9	3,030	64.5	3,095	66.2	3,160	65,000	85%
Norma MRP	64.1	2,885	65.9	2,955	67.7	3,025	69.4	3,090	71.2	3,160	64,900	95%
Norma 204	61.2	2,890	62.9	2,955	64.6	3,020	66.3	3,085	68.0	3,150	64,800	91%
IMR 7977	67.9	2,860	69.8	2,930	71.7	3,005	73.5	3,070	75.4	3,145	64,900	105%
IMR 7828	64.6	2,865	66.4	2,930	68.2	3,000	70.0	3,070	71.8	3,140	64,800	92%
Vihtavuori N165	65.0	2,865	66.8	2,935	68.6	3,000	70.4	3,065	72.2	3,135	64,900	99%
IMR 4350	59.0	2,855	60.6	2,915	62.3	2,980	63.9	3,045	65.6	3,110	64,900	90%

160 gr Bullet · 25" barrel

COAL: 3.300" • Bullet length: 1.386" • Seat depth: 0.635" • Usable capacity: 77.1 / 86.8 gr H_2O

Powder	STEP 1 · 90%		STEP 2		STEP 3		STEP 4		STEP 5 · LIMIT			
	gr	fps	gr	fps	gr	fps	gr	fps	gr	fps	psi	Fill
Vihtavuori N570	69.4	2,895	71.3	2,965	73.3	3,040	75.2	3,115	77.1	3,190	64,900	103%
Ramshot Grand	69.2	2,870	71.1	2,940	73.1	3,020	75.0	3,090	76.9	3,165	64,900	102%
Alliant Reloder 26	65.3	2,885	67.1	2,950	68.9	3,020	70.7	3,090	72.5	3,160	64,900	94%
Alliant Reloder 19	62.7	2,865	64.5	2,935	66.2	3,000	68.0	3,070	69.7	3,140	64,900	96%
Alliant Reloder 22	63.5	2,865	65.3	2,935	67.0	3,000	68.8	3,065	70.6	3,140	64,900	97%
Hodgdon Retumbo	68.9	2,855	70.8	2,925	72.7	2,995	74.6	3,065	76.5	3,140	65,000	103%
Ramshot Magnum	69.9	2,845	71.9	2,920	73.8	2,990	75.8	3,070	77.7	3,140	64,900	101%
Reload Swiss RS76	69.2	2,825	71.1	2,895	73.1	2,965	75.0	3,035	76.9	3,110	64,900	101%
Winchester StaBALL HD	69.9	2,815	71.9	2,885	73.8	2,955	75.8	3,030	77.7	3,100	64,800	103%
IMR 4831	60.7	2,830	62.4	2,895	64.1	2,960	65.7	3,025	67.4	3,090	64,800	94%
Accurate MagPro	66.9	2,805	68.8	2,875	70.6	2,945	72.5	3,015	74.3	3,085	64,900	98%
Hodgdon H4831	62.9	2,805	64.7	2,870	66.4	2,935	68.2	3,005	69.9	3,070	64,800	97%
IMR 7828SSC	62.9	2,800	64.7	2,865	66.4	2,930	68.2	3,000	69.9	3,065	65,000	94%
IMR 7977	66.3	2,775	68.2	2,845	70.0	2,915	71.8	2,985	73.7	3,055	65,000	104%
Hodgdon H4350	57.9	2,800	59.5	2,865	61.1	2,925	62.7	2,985	64.3	3,050	65,000	84%
Hodgdon H4831SC	62.1	2,785	63.8	2,850	65.5	2,915	67.3	2,980	69.0	3,045	65,000	90%
Accurate 3100	61.7	2,775	63.4	2,840	65.2	2,905	66.9	2,970	68.6	3,040	65,000	97%
IMR 7828	62.9	2,775	64.7	2,845	66.4	2,910	68.2	2,975	69.9	3,040	64,900	91%
Vihtavuori N165	63.2	2,770	65.0	2,835	66.7	2,900	68.5	2,965	70.2	3,025	65,000	98%
IMR 4350	57.3	2,755	58.9	2,815	60.5	2,875	62.1	2,935	63.7	3,000	64,900	89%

168 gr Bullet · 25" barrel

COAL: 3.300" • Bullet length: 1.433" • Seat depth: 0.682" • Usable capacity: 76.4 / 86.8 gr H_2O

Powder	STEP 1 · 90%		STEP 2		STEP 3		STEP 4		STEP 5 · LIMIT			
	gr	fps	gr	fps	gr	fps	gr	fps	gr	fps	psi	Fill
Vihtavuori N570	68.1	2,835	70.0	2,905	71.9	2,975	73.8	3,050	75.7	3,120	65,000	102%
Ramshot Grand	68.2	2,815	70.1	2,885	72.0	2,955	73.9	3,025	75.8	3,100	64,900	101%
Alliant Reloder 26	64.1	2,815	65.9	2,885	67.7	2,950	69.4	3,015	71.2	3,085	64,800	94%
Ramshot Magnum	68.9	2,795	70.8	2,865	72.7	2,935	74.6	3,005	76.5	3,080	64,800	100%
Alliant Reloder 19	61.7	2,805	63.4	2,870	65.2	2,940	66.9	3,005	68.6	3,070	64,900	95%
Hodgdon H1000	66.5	2,790	68.3	2,860	70.2	2,930	72.1	3,000	73.9	3,070	62,500	105%
Hodgdon Retumbo	67.8	2,795	69.7	2,860	71.5	2,930	73.4	3,000	75.3	3,070	64,900	102%
Alliant Reloder 22	62.5	2,805	64.2	2,865	66.0	2,935	67.7	3,000	69.4	3,065	64,900	96%
Reload Swiss RS76	68.1	2,765	70.0	2,830	71.9	2,900	73.8	2,970	75.7	3,040	64,800	100%
IMR 4831	59.8	2,770	61.5	2,835	63.1	2,895	64.8	2,960	66.4	3,025	64,900	93%
Winchester Supreme 780	63.8	2,750	65.6	2,820	67.3	2,880	69.1	2,950	70.9	3,015	65,000	93%
Hodgdon H4831	61.8	2,740	63.5	2,805	65.3	2,870	67.0	2,935	68.7	3,000	64,900	96%
IMR 7828SSC	61.7	2,735	63.4	2,795	65.2	2,865	66.9	2,925	68.6	2,990	64,900	93%
IMR 7977	65.3	2,720	67.1	2,785	68.9	2,855	70.7	2,920	72.5	2,990	64,800	103%
Norma MRP	61.3	2,730	63.0	2,790	64.7	2,855	66.4	2,915	68.1	2,980	64,900	93%
IMR 7828	61.7	2,715	63.4	2,775	65.2	2,845	66.9	2,905	68.6	2,970	64,800	90%
Vihtavuori N560	61.4	2,720	63.1	2,780	64.8	2,840	66.5	2,905	68.2	2,965	64,900	93%
Ramshot Hunter	58.7	2,715	60.3	2,775	62.0	2,835	63.6	2,895	65.2	2,955	64,900	91%
Vihtavuori N165	61.9	2,700	63.6	2,760	65.3	2,820	67.1	2,885	68.8	2,950	64,800	97%
IMR 4350	56.3	2,690	57.8	2,745	59.4	2,805	61.0	2,865	62.5	2,920	65,000	88%

175 gr Bullet · 25" barrel

COAL: 3.250" • Bullet length: 1.513" • Seat depth: 0.812" • Usable capacity: 74.7 / 86.8 gr H_2O

Powder	STEP 1 · 90%		STEP 2		STEP 3		STEP 4		STEP 5 · LIMIT			
	gr	fps	gr	fps	gr	fps	gr	fps	gr	fps	psi	Fill
Vihtavuori N570	66.3	2,775	68.2	2,845	70.0	2,910	71.8	2,980	73.7	3,050	64,800	102%
Ramshot Grand	66.6	2,750	68.4	2,815	70.3	2,885	72.2	2,960	74.0	3,030	64,800	101%
Alliant Reloder 26	62.5	2,750	64.2	2,815	66.0	2,885	67.7	2,945	69.4	3,015	64,800	93%
Ramshot Magnum	67.3	2,735	69.2	2,805	71.0	2,875	72.9	2,945	74.8	3,015	65,000	100%
Hodgdon H1000	65.0	2,735	66.8	2,800	68.6	2,865	70.4	2,935	72.2	3,005	62,800	105%
Hodgdon Retumbo	66.2	2,730	68.0	2,795	69.8	2,860	71.7	2,930	73.5	3,000	64,800	102%
Vihtavuori N568	67.0	2,715	68.8	2,785	70.7	2,855	72.6	2,930	74.4	3,000	64,900	103%
Alliant Reloder 22	60.8	2,730	62.5	2,795	64.2	2,860	65.9	2,925	67.6	2,990	64,800	96%
Alliant Reloder 25	64.0	2,715	65.8	2,780	67.5	2,845	69.3	2,910	71.1	2,980	65,000	104%
Reload Swiss RS76	66.5	2,700	68.3	2,765	70.2	2,830	72.1	2,900	73.9	2,965	64,800	100%
Accurate MagPro	64.4	2,690	66.2	2,760	68.0	2,825	69.7	2,890	71.5	2,960	64,800	98%
IMR 4831	58.3	2,700	59.9	2,765	61.5	2,825	63.2	2,890	64.8	2,950	64,900	93%
Winchester Supreme 780	62.2	2,690	63.9	2,750	65.7	2,820	67.4	2,880	69.1	2,945	64,900	93%
IMR 7828SSC	60.1	2,670	61.8	2,730	63.5	2,795	65.1	2,855	66.8	2,920	64,800	93%
Norma MRP	59.8	2,665	61.5	2,725	63.1	2,785	64.8	2,850	66.4	2,910	65,000	92%
IMR 7828	60.1	2,650	61.8	2,710	63.5	2,775	65.1	2,835	66.8	2,900	64,800	90%
Vihtavuori N560	59.8	2,655	61.5	2,715	63.1	2,770	64.8	2,830	66.4	2,890	65,000	93%
Ramshot Hunter	57.2	2,645	58.8	2,705	60.4	2,765	62.0	2,825	63.6	2,885	65,000	90%
Vihtavuori N165	60.3	2,630	62.0	2,695	63.6	2,750	65.3	2,810	67.0	2,875	64,800	96%
IMR 4350	54.7	2,615	56.2	2,670	57.8	2,730	59.3	2,790	60.8	2,845	64,900	87%

7mm WSM

Winchester introduced the 7mm Winchester Short Magnum (WSM) in 2002 together with the .270 WSM. Both followed the .300 WSM of 2001. The family was developed with Browning. All three cartridges use a short beltless case with a rebated rim derived from the .404 Jeffery. The 7mm WSM is the .300 WSM case necked down to .284 inch. Its shoulder is set slightly farther forward than on the .270 WSM. This ensures that a 7mm WSM cartridge cannot be chambered in a .270 WSM rifle.

Winchester factory loads include a 140-grain bullet at about 3,225 fps and a 160-grain bullet at about 3,050 fps. This is broadly comparable to the 7mm Remington Magnum but from a short action. The cartridge is used for deer, sheep, elk and similar game and especially in lightweight mountain rifles. It never became as popular as the .300 WSM or .270 WSM. Its ammunition also costs more than that of the 7mm Remington Magnum. Even so Winchester and Federal continue to load it.

Cartridge specifications	
Bullet Diameter	**0.284" (7.21 mm)**
Max Case Length	**2.100" (53.34 mm)**
Case Trim Length	**2.090" (53.09 mm)**
Max COAL	**2.860" (72.64 mm)**
Primer Pocket	**Large Rifle**
Standard Twist	**1:10"**
Case Capacity	**81.0 gr H_2O**
Max Pressure	**65,000 psi (SAAMI)**

110 gr Bullet · 25" barrel

COAL: 2.823" • Bullet length: 1.048" • Seat depth: 0.325" • Usable capacity: 75.8 / 81.0 gr H_2O

Powder	STEP 1 · 90%		STEP 2		STEP 3		STEP 4		STEP 5 · LIMIT			
	gr	fps	gr	fps	gr	fps	gr	fps	gr	fps	psi	Fill
Alliant Reloder 26	69.6	3,315	71.5	3,400	73.4	3,485	75.4	3,575	77.3	3,660	64,900	102%
Accurate 4350	63.9	3,330	65.7	3,410	67.5	3,495	69.2	3,570	71.0	3,650	65,000	98%
Hodgdon SUPERFORMANCE	65.7	3,320	67.5	3,400	69.3	3,480	71.2	3,565	73.0	3,645	65,000	94%
Hodgdon Hybrid 100V	62.3	3,315	64.0	3,395	65.8	3,475	67.5	3,555	69.2	3,635	64,800	102%
Winchester StaBALL 6.5	63.3	3,330	65.0	3,405	66.8	3,485	68.5	3,560	70.3	3,635	64,900	93%
IMR 4350	63.0	3,300	64.8	3,380	66.5	3,455	68.3	3,535	70.0	3,615	64,800	99%
Ramshot Hunter	64.5	3,295	66.3	3,375	68.1	3,455	69.9	3,535	71.7	3,615	65,000	100%
Vihtavuori N560	68.5	3,295	70.4	3,375	72.3	3,455	74.2	3,535	76.1	3,615	64,400	105%
Ramshot Big Game	61.0	3,310	62.7	3,385	64.4	3,460	66.1	3,535	67.8	3,610	65,000	91%
Alliant Reloder 22	66.6	3,250	68.4	3,330	70.3	3,420	72.2	3,505	74.0	3,585	64,900	104%
Alliant Reloder 16	60.7	3,270	62.4	3,345	64.1	3,415	65.7	3,485	67.4	3,560	65,000	99%
Hodgdon H4350	60.8	3,225	62.5	3,300	64.2	3,375	65.9	3,450	67.6	3,525	64,800	90%
Vihtavuori N160	63.3	3,215	65.0	3,290	66.8	3,370	68.5	3,440	70.3	3,520	64,800	101%
IMR 4451	60.8	3,190	62.5	3,265	64.2	3,345	65.8	3,415	67.5	3,490	64,800	93%
Winchester 760	59.9	3,195	61.6	3,270	63.3	3,340	64.9	3,415	66.6	3,490	64,800	90%
Hodgdon H4831SC	64.8	3,170	66.6	3,250	68.4	3,325	70.2	3,405	72.0	3,485	64,900	96%
Hodgdon H414	59.4	3,180	61.0	3,255	62.7	3,330	64.3	3,400	66.0	3,475	64,700	89%
Shooters World SW4350	62.8	3,165	64.5	3,240	66.3	3,315	68.0	3,390	69.8	3,470	64,800	100%
Hodgdon Varget	53.7	3,180	55.2	3,250	56.7	3,315	58.2	3,385	59.7	3,455	64,900	82%
Hodgdon H4831	64.3	3,110	66.1	3,185	67.8	3,260	69.6	3,340	71.4	3,420	64,900	101%

120 gr Bullet · 25" barrel

COAL: 2.760" • Bullet length: 1.097" • Seat depth: 0.437" • Usable capacity: 74.3 / 81.0 gr H_2O

Powder	STEP 1 · 90%		STEP 2		STEP 3		STEP 4		STEP 5 · LIMIT			
	gr	fps	gr	fps	gr	fps	gr	fps	gr	fps	psi	Fill
Alliant Reloder 26	67.7	3,220	69.6	3,300	71.5	3,385	73.3	3,465	75.2	3,550	65,000	102%
Accurate 4350	62.0	3,215	63.7	3,290	65.5	3,370	67.2	3,445	68.9	3,520	64,900	97%
Hodgdon SUPERFORMANCE	63.8	3,205	65.6	3,285	67.3	3,360	69.1	3,440	70.9	3,520	64,800	93%
Hodgdon Hybrid 100V	60.7	3,210	62.4	3,285	64.1	3,365	65.7	3,435	67.4	3,515	64,900	102%
Alliant Reloder 19	64.4	3,175	66.2	3,255	68.0	3,335	69.8	3,415	71.6	3,500	64,800	102%
Vihtavuori N560	66.3	3,180	68.2	3,260	70.0	3,335	71.8	3,410	73.7	3,490	64,900	104%
Winchester StaBALL 6.5	61.3	3,200	63.0	3,270	64.7	3,345	66.4	3,415	68.1	3,490	64,800	92%
Ramshot Hunter	62.6	3,180	64.3	3,255	66.1	3,330	67.8	3,405	69.6	3,485	64,800	99%
IMR 4350	61.0	3,180	62.7	3,255	64.4	3,330	66.1	3,405	67.8	3,480	65,000	98%
Vihtavuori N555	61.6	3,165	63.3	3,240	65.0	3,315	66.7	3,390	68.4	3,465	64,900	99%
Ramshot Big Game	59.0	3,175	60.6	3,245	62.3	3,315	63.9	3,385	65.6	3,460	64,900	90%
Reload Swiss RS70	64.4	3,145	66.2	3,225	68.0	3,305	69.7	3,380	71.5	3,460	65,000	97%
IMR 4831	61.6	3,120	63.3	3,200	65.0	3,275	66.7	3,350	68.4	3,430	64,800	99%
Norma MRP	64.4	3,125	66.2	3,200	68.0	3,280	69.7	3,350	71.5	3,430	64,800	100%
Alliant Reloder 16	58.6	3,140	60.2	3,205	61.8	3,275	63.5	3,350	65.1	3,415	65,000	97%
IMR 7828SSC	64.7	3,090	66.5	3,170	68.3	3,245	70.1	3,325	71.9	3,405	64,900	101%
Hodgdon H4350	58.9	3,115	60.5	3,185	62.2	3,255	63.8	3,330	65.4	3,400	64,900	89%
Vihtavuori N160	61.3	3,100	63.0	3,170	64.7	3,245	66.4	3,315	68.1	3,390	65,000	99%
Accurate 3100	63.4	3,060	65.2	3,140	66.9	3,215	68.7	3,295	70.4	3,370	64,900	103%
Winchester 760	58.1	3,075	59.7	3,145	61.3	3,215	63.0	3,290	64.6	3,360	65,000	89%

140 gr Bullet · 25" barrel

COAL: 2.830" • Bullet length: 1.261" • Seat depth: 0.531" • Usable capacity: 72.8 / 81.0 gr H_2O

Powder	STEP 1 · 90%		STEP 2		STEP 3		STEP 4		STEP 5 · LIMIT			
	gr	fps	gr	fps	gr	fps	gr	fps	gr	fps	psi	Fill
Alliant Reloder 23	63.3	3,080	65.0	3,150	66.8	3,230	68.5	3,300	70.3	3,375	64,800	105%
Alliant Reloder 26	64.7	3,035	66.5	3,110	68.3	3,185	70.1	3,260	71.9	3,335	64,800	99%
Alliant Reloder 19	61.8	3,005	63.5	3,075	65.3	3,155	67.0	3,225	68.7	3,300	64,900	100%
Hodgdon Hybrid 100V	58.2	3,010	59.8	3,080	61.5	3,150	63.1	3,225	64.7	3,295	64,900	100%
Hodgdon SUPERFORMANCE	60.9	3,005	62.6	3,075	64.3	3,145	66.0	3,215	67.7	3,290	64,800	91%
Accurate MagPro	67.0	2,970	68.8	3,040	70.7	3,120	72.6	3,200	74.4	3,280	64,900	104%
Accurate 4350	59.0	3,000	60.6	3,065	62.3	3,135	63.9	3,205	65.6	3,275	64,900	94%
Ramshot Grand	67.1	2,965	69.0	3,040	70.8	3,115	72.7	3,195	74.6	3,275	64,900	104%
Alliant Reloder 22	61.8	2,970	63.5	3,045	65.3	3,120	67.0	3,190	68.7	3,265	64,800	100%
Ramshot Hunter	59.9	2,975	61.5	3,040	63.2	3,115	64.8	3,180	66.5	3,250	65,000	97%
Vihtavuori N560	62.5	2,960	64.2	3,025	66.0	3,095	67.7	3,165	69.4	3,230	65,000	100%
IMR 4831	59.1	2,945	60.8	3,015	62.4	3,085	64.0	3,155	65.7	3,225	65,000	97%
IMR 4955	60.2	2,945	61.9	3,015	63.6	3,085	65.2	3,155	66.9	3,225	64,900	92%
Vihtavuori N165	63.1	2,945	64.8	3,015	66.6	3,085	68.3	3,155	70.1	3,225	65,000	103%
Norma MRP	61.5	2,935	63.2	3,005	64.9	3,075	66.6	3,145	68.3	3,215	64,800	97%
Alliant Power Pro 4000-MR	59.4	2,925	61.0	2,990	62.7	3,060	64.3	3,130	66.0	3,200	64,900	92%
Hodgdon H4831SC	60.2	2,885	61.9	2,955	63.6	3,025	65.2	3,095	66.9	3,165	64,900	92%
Hodgdon H4350	55.7	2,895	57.3	2,965	58.8	3,030	60.4	3,095	61.9	3,160	64,900	86%
Vihtavuori N170	65.3	2,885	67.1	2,955	68.9	3,020	70.7	3,090	72.5	3,160	64,800	103%
Winchester 760	55.3	2,860	56.8	2,925	58.3	2,985	59.9	3,055	61.4	3,115	64,900	87%

150 gr Bullet · 25" barrel

COAL: 2.840" • Bullet length: 1.253" • Seat depth: 0.513" • Usable capacity: 73.3 / 81.0 gr H_2O

Powder	STEP 1 · 90%		STEP 2		STEP 3		STEP 4		STEP 5 · LIMIT			
	gr	fps	gr	fps	gr	fps	gr	fps	gr	fps	psi	Fill
Alliant Reloder 23	62.4	2,990	64.1	3,055	65.8	3,125	67.6	3,200	69.3	3,270	64,800	103%
Alliant Reloder 26	63.9	2,955	65.7	3,025	67.5	3,100	69.2	3,170	71.0	3,245	65,000	97%
Alliant Reloder 19	61.1	2,925	62.8	2,995	64.5	3,070	66.2	3,140	67.9	3,210	64,900	98%
Vihtavuori N570	67.2	2,905	69.1	2,980	71.0	3,060	72.8	3,130	74.7	3,210	63,500	105%
Accurate MagPro	66.4	2,905	68.3	2,980	70.1	3,055	72.0	3,130	73.8	3,205	64,900	103%
Ramshot Magnum	68.3	2,900	70.2	2,975	72.1	3,055	74.0	3,130	75.9	3,205	64,800	104%
Hodgdon Hybrid 100V	57.6	2,925	59.2	2,990	60.8	3,060	62.4	3,125	64.0	3,195	64,800	98%
Vihtavuori N565	64.6	2,900	66.4	2,970	68.2	3,045	70.0	3,115	71.8	3,185	65,000	103%
Hodgdon Retumbo	66.5	2,885	68.3	2,955	70.2	3,030	72.1	3,105	73.9	3,180	64,800	105%
Alliant Reloder 22	61.0	2,890	62.7	2,960	64.4	3,030	66.1	3,100	67.8	3,170	64,900	98%
Accurate 4350	58.1	2,900	59.7	2,965	61.3	3,030	62.9	3,095	64.5	3,165	64,900	92%
Ramshot Hunter	59.0	2,880	60.6	2,945	62.3	3,015	63.9	3,080	65.5	3,145	64,900	95%
Alliant Reloder 25	63.5	2,835	65.3	2,905	67.0	2,975	68.8	3,050	70.5	3,120	63,200	105%
Norma MRP	60.7	2,855	62.4	2,920	64.1	2,990	65.7	3,055	67.4	3,120	64,900	96%
Vihtavuori N165	61.9	2,845	63.6	2,915	65.3	2,980	67.1	3,050	68.8	3,115	64,900	101%
Hodgdon H1000	63.8	2,825	65.6	2,900	67.3	2,965	69.1	3,035	70.9	3,110	64,400	105%
Accurate 3100	59.8	2,815	61.5	2,885	63.1	2,950	64.8	3,020	66.4	3,085	65,000	98%
IMR 7828	60.8	2,810	62.5	2,880	64.2	2,945	65.9	3,015	67.6	3,085	65,000	93%
Hodgdon H4831	58.6	2,760	60.2	2,825	61.8	2,885	63.5	2,955	65.1	3,020	65,000	95%
Winchester 760	54.3	2,760	55.8	2,820	57.3	2,885	58.8	2,945	60.3	3,005	64,800	85%

160 gr Bullet · 25" barrel

COAL: 2.840" • Bullet length: 1.386" • Seat depth: 0.646" • Usable capacity: 71.1 / 81.0 gr H_2O

Powder	STEP 1 · 90%		STEP 2		STEP 3		STEP 4		STEP 5 · LIMIT			
	gr	fps	gr	fps	gr	fps	gr	fps	gr	fps	psi	Fill
Alliant Reloder 23	60.3	2,885	62.0	2,950	63.6	3,015	65.3	3,085	67.0	3,155	64,900	102%
Alliant Reloder 26	61.7	2,855	63.4	2,925	65.2	2,995	66.9	3,065	68.6	3,135	64,800	97%
Vihtavuori N570	65.3	2,840	67.1	2,910	68.9	2,985	70.7	3,055	72.5	3,130	64,100	105%
Ramshot Magnum	66.2	2,820	68.0	2,890	69.9	2,965	71.8	3,040	73.6	3,115	64,900	104%
Accurate MagPro	64.4	2,820	66.2	2,890	68.0	2,965	69.7	3,035	71.5	3,110	64,800	103%
Alliant Reloder 19	59.1	2,835	60.8	2,900	62.4	2,970	64.0	3,035	65.7	3,105	64,900	98%
Ramshot Grand	64.5	2,805	66.3	2,875	68.1	2,950	69.9	3,020	71.7	3,095	64,900	103%
Hodgdon Retumbo	64.4	2,795	66.2	2,865	68.0	2,935	69.8	3,005	71.6	3,080	64,800	105%
Vihtavuori N565	62.2	2,810	63.9	2,875	65.7	2,945	67.4	3,010	69.1	3,080	64,900	102%
Alliant Reloder 22	59.0	2,800	60.6	2,865	62.3	2,930	63.9	2,995	65.5	3,060	64,800	98%
Accurate 4350	56.1	2,800	57.6	2,860	59.2	2,925	60.8	2,990	62.3	3,050	64,900	92%
Winchester StaBALL HD	65.3	2,750	67.1	2,820	68.9	2,890	70.7	2,960	72.5	3,030	64,900	104%
IMR 8133	64.6	2,730	66.4	2,805	68.2	2,875	70.0	2,945	71.8	3,020	63,400	105%
Vihtavuori N165	59.8	2,750	61.5	2,815	63.1	2,875	64.8	2,940	66.4	3,005	65,000	100%
Vihtavuori N560	58.7	2,745	60.3	2,805	62.0	2,870	63.6	2,930	65.2	2,995	64,800	96%
Alliant Power Pro 4000-MR	56.6	2,735	58.2	2,800	59.8	2,865	61.3	2,925	62.9	2,990	64,800	90%
IMR 7828SSC	58.4	2,735	60.0	2,795	61.7	2,865	63.3	2,925	64.9	2,990	64,900	95%
Vihtavuori N555	54.1	2,740	55.6	2,800	57.1	2,865	58.6	2,925	60.1	2,985	64,900	91%
IMR 7828	58.7	2,720	60.3	2,785	62.0	2,850	63.6	2,915	65.2	2,980	64,900	92%
Hodgdon H4831	56.5	2,665	58.1	2,725	59.6	2,785	61.2	2,850	62.8	2,915	64,800	95%

168 gr Bullet · 25" barrel

COAL: 2.850" • Bullet length: 1.441" • Seat depth: 0.691" • Usable capacity: 70.5 / 81.0 gr H_2O

Powder	STEP 1 · 90%		STEP 2		STEP 3		STEP 4		STEP 5 · LIMIT			
	gr	fps	gr	fps	gr	fps	gr	fps	gr	fps	psi	Fill
Alliant Reloder 23	59.2	2,815	60.9	2,880	62.5	2,945	64.2	3,015	65.8	3,080	64,800	101%
Vihtavuori N570	64.4	2,795	66.2	2,865	68.0	2,935	69.8	3,010	71.6	3,080	65,000	104%
Alliant Reloder 26	60.7	2,795	62.4	2,865	64.1	2,930	65.7	2,995	67.4	3,065	64,800	96%
Ramshot Magnum	65.3	2,770	67.1	2,840	68.9	2,910	70.7	2,980	72.5	3,055	64,900	103%
Accurate MagPro	63.5	2,765	65.3	2,835	67.0	2,905	68.8	2,980	70.5	3,045	64,900	102%
Alliant Reloder 19	58.1	2,770	59.7	2,835	61.3	2,900	63.0	2,970	64.6	3,035	64,700	97%
Ramshot Grand	63.5	2,750	65.3	2,820	67.0	2,885	68.8	2,955	70.6	3,030	64,700	102%
Hodgdon Retumbo	63.5	2,740	65.3	2,810	67.0	2,875	68.8	2,945	70.5	3,010	64,800	104%
Alliant Reloder 22	58.0	2,735	59.6	2,800	61.2	2,865	62.8	2,925	64.4	2,990	64,900	97%
IMR 8133	64.1	2,700	65.9	2,770	67.7	2,840	69.4	2,905	71.2	2,980	64,500	105%
Accurate 4350	55.0	2,725	56.5	2,785	58.0	2,845	59.6	2,910	61.1	2,970	64,900	91%
Winchester Supreme 780	59.9	2,710	61.6	2,775	63.3	2,840	64.9	2,905	66.6	2,970	65,000	95%
Hodgdon H1000	60.9	2,690	62.6	2,755	64.3	2,820	66.0	2,885	67.7	2,955	64,900	104%
Ramshot Hunter	55.9	2,710	57.5	2,770	59.0	2,830	60.5	2,890	62.1	2,955	64,800	94%
Norma MRP	57.5	2,690	59.1	2,750	60.7	2,815	62.3	2,875	63.9	2,940	64,800	94%
IMR 7977	61.1	2,670	62.8	2,735	64.5	2,800	66.2	2,870	67.9	2,935	65,000	104%
Norma 204	55.1	2,690	56.6	2,750	58.2	2,815	59.7	2,875	61.2	2,935	64,900	91%
Vihtavuori N165	58.6	2,680	60.2	2,740	61.8	2,800	63.5	2,865	65.1	2,930	64,900	99%
IMR 7828	57.6	2,660	59.2	2,725	60.8	2,785	62.4	2,850	64.0	2,910	64,900	91%
Hodgdon H4350	51.7	2,630	53.1	2,690	54.5	2,745	56.0	2,805	57.4	2,865	64,900	82%

175 gr Bullet · 25" barrel

COAL: 2.800" • Bullet length: 1.458" • Seat depth: 0.758" • Usable capacity: 69.6 / 81.0 gr H_2O

Powder	STEP 1 · 90%		STEP 2		STEP 3		STEP 4		STEP 5 · LIMIT			
	gr	fps	gr	fps	gr	fps	gr	fps	gr	fps	psi	Fill
Vihtavuori N570	63.2	2,745	65.0	2,815	66.7	2,880	68.5	2,955	70.2	3,020	65,000	104%
Alliant Reloder 23	58.1	2,750	59.7	2,815	61.3	2,880	62.9	2,940	64.5	3,005	64,900	101%
Alliant Reloder 26	59.5	2,735	61.1	2,795	62.8	2,865	64.4	2,930	66.1	2,995	64,800	95%
Ramshot Magnum	64.1	2,715	65.9	2,785	67.7	2,855	69.4	2,920	71.2	2,995	64,800	103%
Accurate MagPro	62.4	2,710	64.1	2,780	65.8	2,845	67.6	2,920	69.3	2,985	64,900	102%
Ramshot Grand	62.5	2,695	64.2	2,760	66.0	2,830	67.7	2,900	69.4	2,965	64,800	102%
Hodgdon Retumbo	62.4	2,685	64.1	2,750	65.8	2,815	67.6	2,885	69.3	2,950	65,000	104%
Vihtavuori N565	59.4	2,685	61.0	2,745	62.7	2,810	64.3	2,870	66.0	2,935	64,900	100%
Alliant Reloder 25	60.0	2,660	61.7	2,725	63.4	2,790	65.0	2,855	66.7	2,925	65,000	105%
IMR 8133	63.1	2,650	64.8	2,715	66.6	2,785	68.3	2,855	70.1	2,925	64,900	105%
Reload Swiss RS70	56.7	2,665	58.3	2,730	59.9	2,790	61.4	2,850	63.0	2,915	65,000	91%
Winchester StaBALL HD	63.1	2,640	64.8	2,705	66.6	2,770	68.3	2,835	70.1	2,905	64,800	103%
Accurate 4350	53.9	2,660	55.4	2,720	56.9	2,780	58.4	2,840	59.9	2,900	65,000	90%
Hodgdon H1000	59.9	2,635	61.5	2,700	63.2	2,765	64.8	2,830	66.5	2,895	65,000	104%
IMR 7977	59.9	2,610	61.6	2,675	63.3	2,740	64.9	2,805	66.6	2,870	64,800	104%
IMR 7828SSC	56.2	2,615	57.8	2,675	59.3	2,735	60.9	2,795	62.4	2,855	65,000	93%
Accurate 3100	55.5	2,600	57.0	2,660	58.6	2,725	60.2	2,790	61.7	2,850	64,800	96%
Vihtavuori N560	56.2	2,610	57.8	2,670	59.3	2,725	60.9	2,785	62.4	2,840	64,900	94%
Hodgdon H4831SC	55.4	2,590	56.9	2,650	58.5	2,710	60.0	2,770	61.5	2,830	64,800	89%
Hodgdon H4350	50.5	2,565	51.9	2,620	53.3	2,675	54.7	2,735	56.1	2,790	64,800	81%

7mm-08 Remington

Remington introduced the 7mm-08 Remington in 1980 in its Model 788 and Model 700 bolt-action rifles. The cartridge standardized the 7mm-308. That wildcat dated to about 1958 and was formed by necking the .308 Winchester case down to accept .284-inch bullets. The wildcat had been popular with metallic silhouette shooters. The commercial version became the second most popular derivative of the .308 Winchester after the .243 Winchester. Remington also offered it in limited runs of the Model 7600 pump-action rifle.

Factory loads commonly use 140-grain bullets at about 2,800 fps and 150-grain bullets at about 2,650 fps. The cartridge is valued for moderate recoil and its suitability for short and light rifles. It is widely used for deer, pronghorn and similar game. Metallic silhouette competitors use it as well. Most major manufacturers offer bolt-action rifles in the chambering. These include Browning, Ruger, Savage and Weatherby. Factory ammunition is widely available.

Cartridge specifications	
Bullet Diameter	**0.284" (7.21 mm)**
Max Case Length	**2.035" (51.69 mm)**
Case Trim Length	**2.025" (51.44 mm)**
Max COAL	**2.800" (71.12 mm)**
Primer Pocket	**Large Rifle**
Standard Twist	**1:10"**
Case Capacity	**54.9 gr H_2O**
Max Pressure	**61,000 psi (SAAMI)**

120 gr Bullet · 25" barrel

COAL: 2.700" • Bullet length: 1.097" • Seat depth: 0.432" • Usable capacity: 48.2 / 54.9 gr H_2O

Powder	STEP 1 · 90%		STEP 2		STEP 3		STEP 4		STEP 5 · LIMIT			
	gr	fps	gr	fps	gr	fps	gr	fps	gr	fps	psi	Fill
Hodgdon Leverevolution	43.7	2,990	44.9	3,055	46.1	3,125	47.3	3,195	48.5	3,265	61,000	96%
Reload Swiss RS52	43.3	2,940	44.5	3,010	45.7	3,080	46.9	3,150	48.1	3,220	58,900	105%
Vihtavuori N540	42.8	2,925	44.0	2,995	45.1	3,055	46.3	3,120	47.5	3,190	60,800	105%
Winchester 748	43.0	2,905	44.2	2,975	45.4	3,045	46.6	3,115	47.8	3,185	60,900	102%
Alliant Reloder 15	42.7	2,915	43.9	2,980	45.0	3,045	46.2	3,110	47.4	3,180	60,100	105%
Norma 201	40.3	2,905	41.4	2,975	42.5	3,040	43.7	3,110	44.8	3,180	61,000	103%
Hodgdon CFE 223	43.7	2,900	44.9	2,970	46.1	3,035	47.3	3,105	48.5	3,175	60,900	102%
Alliant TS 15.5	41.9	2,865	43.1	2,935	44.3	3,005	45.4	3,070	46.6	3,140	60,800	104%
Hodgdon H4895	40.1	2,870	41.2	2,935	42.3	2,995	43.4	3,060	44.5	3,125	61,000	96%
IMR 4064	41.3	2,865	42.4	2,925	43.6	2,995	44.8	3,060	45.9	3,125	60,800	102%
Ramshot Big Game	44.7	2,840	46.0	2,915	47.2	2,980	48.5	3,050	49.7	3,120	57,700	105%
Ramshot TAC	40.2	2,860	41.3	2,925	42.5	2,995	43.6	3,060	44.7	3,120	60,900	99%
Vihtavuori N530	37.9	2,870	39.0	2,935	40.0	2,990	41.0	3,050	42.1	3,115	60,700	94%
Accurate 2495	40.4	2,840	41.5	2,905	42.6	2,970	43.8	3,040	44.9	3,105	60,700	94%
Hodgdon Varget	40.8	2,840	41.9	2,900	43.0	2,965	44.2	3,035	45.3	3,100	60,900	98%
Norma 202	40.4	2,850	41.5	2,910	42.6	2,970	43.8	3,040	44.9	3,100	60,700	101%
Reload Swiss RS40	37.9	2,845	39.0	2,910	40.0	2,970	41.0	3,030	42.1	3,095	60,800	93%
Alliant Power Pro 2000-MR	43.3	2,820	44.5	2,885	45.7	2,955	46.9	3,025	48.1	3,090	59,300	105%
Alliant Power Pro Varmint	40.4	2,835	41.5	2,895	42.6	2,960	43.8	3,030	44.9	3,090	60,700	98%
Vihtavuori N140	40.3	2,785	41.4	2,845	42.5	2,905	43.7	2,975	44.8	3,035	60,900	95%

130 gr Bullet · 25" barrel

COAL: 2.730" • Bullet length: 1.060" • Seat depth: 0.365" • Usable capacity: 49.4 / 54.9 gr H_2O

Powder	STEP 1 · 90%		STEP 2		STEP 3		STEP 4		STEP 5 · LIMIT			
	gr	fps	gr	fps	gr	fps	gr	fps	gr	fps	psi	Fill
Reload Swiss RS52	43.7	2,885	44.9	2,955	46.2	3,025	47.4	3,095	48.6	3,160	60,900	103%
Hodgdon Leverevolution	43.4	2,895	44.6	2,960	45.8	3,025	47.0	3,090	48.2	3,155	60,900	93%
Reload Swiss RS50	44.2	2,840	45.4	2,905	46.7	2,975	47.9	3,040	49.1	3,105	60,900	104%
Ramshot Big Game	45.5	2,820	46.8	2,890	48.0	2,955	49.3	3,025	50.5	3,090	60,800	104%
Winchester 748	42.8	2,825	44.0	2,890	45.2	2,955	46.4	3,020	47.6	3,090	60,800	99%
Norma 201	40.1	2,830	41.2	2,890	42.3	2,955	43.4	3,020	44.5	3,085	60,800	100%
Alliant Reloder 15	42.3	2,820	43.5	2,885	44.6	2,945	45.8	3,010	47.0	3,075	60,700	102%
Hodgdon CFE 223	43.5	2,815	44.7	2,880	45.9	2,945	47.1	3,010	48.3	3,075	60,900	100%
Vihtavuori N540	42.1	2,810	43.3	2,875	44.5	2,940	45.6	2,995	46.8	3,060	61,000	101%
Shooters World Match Rifle	41.4	2,795	42.5	2,855	43.7	2,920	44.9	2,985	46.0	3,050	60,700	96%
Alliant Power Pro 2000-MR	43.6	2,770	44.8	2,835	46.0	2,900	47.2	2,965	48.4	3,035	60,800	103%
Alliant Reloder 17	44.8	2,750	46.0	2,815	47.3	2,890	48.5	2,955	49.8	3,030	60,900	101%
Winchester 760	45.4	2,755	46.6	2,820	47.9	2,885	49.1	2,950	50.4	3,025	59,200	105%
IMR 4064	41.0	2,780	42.1	2,835	43.3	2,900	44.4	2,960	45.5	3,020	60,900	99%
Hodgdon H4895	39.6	2,765	40.7	2,825	41.8	2,885	42.9	2,945	44.0	3,005	60,800	92%
Hodgdon BL-C(2)	41.7	2,750	42.9	2,815	44.0	2,875	45.1	2,935	46.3	3,000	60,700	94%
Hodgdon Varget	40.5	2,750	41.6	2,810	42.8	2,880	43.9	2,940	45.0	3,000	60,800	95%
Norma 202	39.9	2,740	41.0	2,800	42.1	2,860	43.2	2,920	44.3	2,980	60,700	97%
Accurate 2700	43.7	2,690	44.9	2,755	46.2	2,825	47.4	2,890	48.6	2,955	60,700	100%
Vihtavuori N140	39.8	2,685	40.9	2,745	42.0	2,805	43.1	2,865	44.2	2,925	60,800	91%

140 gr Bullet · 25" barrel

COAL: 2.750" • Bullet length: 1.261" • Seat depth: 0.546" • Usable capacity: 46.5 / 54.9 gr H_2O

Powder	STEP 1 · 90%		STEP 2		STEP 3		STEP 4		STEP 5 · LIMIT			
	gr	fps	gr	fps	gr	fps	gr	fps	gr	fps	psi	Fill
Reload Swiss RS52	41.4	2,750	42.5	2,810	43.7	2,875	44.9	2,945	46.0	3,005	60,800	104%
Hodgdon Leverevolution	41.0	2,745	42.1	2,805	43.3	2,875	44.5	2,940	45.6	3,000	60,800	94%
Reload Swiss RS50	41.8	2,695	42.9	2,755	44.1	2,820	45.3	2,885	46.4	2,945	60,600	105%
Ramshot Big Game	43.0	2,680	44.2	2,745	45.4	2,810	46.6	2,875	47.8	2,940	60,700	105%
Winchester 748	40.6	2,690	41.7	2,750	42.9	2,820	44.0	2,880	45.1	2,940	60,900	100%
Norma 201	37.8	2,685	38.8	2,745	39.9	2,810	41.0	2,875	42.0	2,930	60,700	100%
Alliant Reloder 15	40.0	2,685	41.1	2,745	42.2	2,805	43.3	2,865	44.4	2,925	60,800	102%
Hodgdon H4350	43.5	2,650	44.7	2,715	45.9	2,780	47.1	2,845	48.3	2,910	60,900	105%
IMR 4895	38.8	2,660	39.9	2,720	41.0	2,780	42.0	2,835	43.1	2,900	60,900	96%
Alliant Reloder 17	42.4	2,620	43.6	2,690	44.8	2,755	45.9	2,820	47.1	2,890	60,800	102%
Alliant Power Pro 2000-MR	41.2	2,635	42.4	2,700	43.5	2,760	44.6	2,820	45.8	2,885	60,700	104%
IMR 4064	38.6	2,635	39.7	2,695	40.8	2,755	41.8	2,810	42.9	2,870	61,000	99%
Reload Swiss RS60	42.7	2,610	43.9	2,675	45.0	2,735	46.2	2,805	47.4	2,870	57,600	105%
Winchester 760	42.7	2,610	43.9	2,675	45.0	2,735	46.2	2,800	47.4	2,865	58,100	105%
IMR 4320	39.0	2,615	40.1	2,680	41.1	2,735	42.2	2,795	43.3	2,860	60,900	94%
Hodgdon H4895	37.4	2,620	38.5	2,680	39.5	2,735	40.5	2,790	41.6	2,855	61,000	93%
Hodgdon Varget	38.3	2,615	39.3	2,670	40.4	2,735	41.5	2,795	42.5	2,850	60,800	95%
IMR 8208 XBR	36.9	2,605	37.9	2,660	39.0	2,720	40.0	2,775	41.0	2,835	60,800	96%
Vihtavuori N530	35.1	2,615	36.1	2,670	37.0	2,725	38.0	2,780	39.0	2,835	60,900	90%
Vihtavuori N140	37.5	2,545	38.5	2,600	39.6	2,660	40.7	2,720	41.7	2,775	60,700	91%

150 gr Bullet · 25" barrel

COAL: 2.770" • Bullet length: 1.290" • Seat depth: 0.555" • Usable capacity: 46.4 / 54.9 gr H_2O

Powder	STEP 1 · 90%		STEP 2		STEP 3		STEP 4		STEP 5 · LIMIT			
	gr	fps	gr	fps	gr	fps	gr	fps	gr	fps	psi	Fill
Reload Swiss RS52	40.7	2,655	41.8	2,715	43.0	2,780	44.1	2,845	45.2	2,905	60,700	102%
Hodgdon Leverevolution	40.2	2,645	41.3	2,705	42.5	2,770	43.6	2,830	44.7	2,890	60,800	92%
Ramshot Big Game	42.3	2,595	43.5	2,660	44.6	2,715	45.8	2,780	47.0	2,845	60,800	103%
Reload Swiss RS50	41.1	2,600	42.3	2,665	43.4	2,725	44.6	2,790	45.7	2,845	61,000	103%
Vihtavuori N550	41.7	2,605	42.9	2,665	44.0	2,720	45.1	2,775	46.3	2,840	58,800	105%
Winchester 748	39.9	2,600	41.0	2,660	42.1	2,720	43.2	2,780	44.3	2,840	61,000	98%
Reload Swiss RS60	42.6	2,570	43.8	2,635	45.0	2,705	46.1	2,765	47.3	2,830	59,600	105%
Hodgdon H414	42.6	2,575	43.8	2,635	45.0	2,700	46.1	2,760	47.3	2,825	60,700	104%
Winchester 760	42.7	2,570	43.9	2,635	45.0	2,690	46.2	2,755	47.4	2,820	60,700	105%
Alliant Reloder 15	39.0	2,580	40.1	2,635	41.1	2,690	42.2	2,750	43.3	2,810	60,800	100%
Hodgdon H380	41.3	2,560	42.4	2,620	43.6	2,685	44.8	2,750	45.9	2,805	60,500	105%
Vihtavuori N540	38.7	2,555	39.8	2,610	40.9	2,670	41.9	2,720	43.0	2,780	61,000	98%
IMR 4064	37.7	2,535	38.8	2,590	39.8	2,645	40.9	2,705	41.9	2,760	60,900	97%
Ramshot TAC	37.1	2,525	38.1	2,580	39.2	2,640	40.2	2,695	41.2	2,750	60,800	94%
Hodgdon Varget	37.4	2,515	38.5	2,575	39.5	2,630	40.5	2,685	41.6	2,745	60,800	93%
Accurate 2520	37.8	2,515	38.8	2,570	39.9	2,625	41.0	2,685	42.0	2,740	60,800	93%
Accurate 2700	40.8	2,490	41.9	2,550	43.0	2,605	44.2	2,670	45.3	2,730	60,800	99%
Vihtavuori N150	37.9	2,500	39.0	2,560	40.0	2,610	41.0	2,665	42.1	2,725	60,800	102%
Alliant Power Pro Varmint	37.1	2,500	38.1	2,550	39.2	2,610	40.2	2,665	41.2	2,720	60,700	94%
Vihtavuori N140	36.6	2,445	37.6	2,500	38.7	2,555	39.7	2,610	40.7	2,665	60,900	89%

160 gr Bullet · 25" barrel

COAL: 2.755" • Bullet length: 1.371" • Seat depth: 0.651" • Usable capacity: 44.9 / 54.9 gr H_2O

Powder	STEP 1 · 90%		STEP 2		STEP 3		STEP 4		STEP 5 · LIMIT			
	gr	fps	gr	fps	gr	fps	gr	fps	gr	fps	psi	Fill
Reload Swiss RS52	39.2	2,550	40.3	2,610	41.4	2,665	42.5	2,730	43.6	2,790	60,900	102%
Hodgdon Leverevolution	38.7	2,535	39.8	2,595	40.9	2,655	41.9	2,710	43.0	2,770	60,700	91%
Ramshot Big Game	40.8	2,495	41.9	2,555	43.0	2,610	44.2	2,675	45.3	2,735	60,800	103%
Reload Swiss RS60	41.2	2,485	42.4	2,550	43.5	2,610	44.6	2,670	45.8	2,735	60,100	105%
Vihtavuori N550	40.3	2,505	41.4	2,560	42.5	2,620	43.7	2,680	44.8	2,735	60,100	105%
Hodgdon H414	41.1	2,480	42.3	2,540	43.4	2,600	44.6	2,665	45.7	2,725	61,000	104%
Winchester 748	38.3	2,490	39.4	2,550	40.5	2,610	41.5	2,660	42.6	2,720	60,700	98%
Winchester 760	41.1	2,470	42.3	2,530	43.4	2,590	44.6	2,655	45.7	2,715	60,700	105%
Alliant Reloder 17	40.3	2,460	41.4	2,520	42.5	2,580	43.7	2,645	44.8	2,705	60,700	100%
Hodgdon H380	39.9	2,465	41.0	2,525	42.1	2,585	43.2	2,640	44.3	2,700	60,900	105%
Alliant Reloder 15	37.4	2,465	38.5	2,525	39.5	2,575	40.5	2,630	41.6	2,690	61,000	99%
Alliant Power Pro 2000-MR	39.1	2,455	40.2	2,510	41.3	2,570	42.3	2,625	43.4	2,680	60,900	102%
Vihtavuori N540	37.1	2,440	38.1	2,490	39.2	2,550	40.2	2,600	41.2	2,655	60,800	97%
IMR 4064	36.2	2,425	37.2	2,480	38.2	2,530	39.2	2,585	40.2	2,640	60,800	96%
IMR 4955	42.1	2,385	43.3	2,450	44.5	2,510	45.6	2,570	46.8	2,635	59,300	105%
Ramshot TAC	35.7	2,415	36.7	2,470	37.7	2,525	38.7	2,580	39.7	2,635	61,000	94%
Hodgdon Varget	36.0	2,415	37.0	2,465	38.0	2,520	39.0	2,575	40.0	2,630	60,900	93%
Shooters World Long Rifle	38.5	2,395	39.6	2,450	40.6	2,505	41.7	2,565	42.8	2,620	60,800	105%
Accurate 2520	36.3	2,405	37.3	2,455	38.3	2,510	39.3	2,560	40.3	2,615	60,900	92%
IMR 4451	39.8	2,380	40.9	2,435	42.0	2,495	43.1	2,550	44.2	2,610	60,700	102%

168 gr Bullet · 25" barrel

COAL: 2.791" • Bullet length: 1.433" • Seat depth: 0.678" • Usable capacity: 44.6 / 54.9 gr H_2O

Powder	STEP 1 · 90%		STEP 2		STEP 3		STEP 4		STEP 5 · LIMIT			
	gr	fps	gr	fps	gr	fps	gr	fps	gr	fps	psi	Fill
Reload Swiss RS52	38.6	2,485	39.7	2,545	40.8	2,605	41.8	2,660	42.9	2,720	60,900	101%
Hodgdon Leverevolution	38.0	2,470	39.0	2,520	40.1	2,580	41.2	2,640	42.2	2,695	60,700	90%
Reload Swiss RS60	40.8	2,445	41.9	2,505	43.0	2,565	44.2	2,630	45.3	2,690	60,800	105%
Winchester StaBALL 6.5	41.8	2,450	42.9	2,505	44.1	2,570	45.3	2,630	46.4	2,690	57,800	105%
Ramshot Big Game	40.1	2,435	41.2	2,490	42.4	2,550	43.5	2,610	44.6	2,665	60,900	102%
Vihtavuori N550	39.6	2,445	40.7	2,500	41.8	2,555	42.9	2,610	44.0	2,665	60,800	104%
Hodgdon H414	40.4	2,420	41.5	2,475	42.6	2,535	43.8	2,600	44.9	2,655	60,700	103%
Alliant Reloder 17	39.8	2,415	40.9	2,475	42.0	2,530	43.1	2,590	44.2	2,650	60,900	99%
Winchester 748	37.7	2,430	38.8	2,485	39.8	2,540	40.9	2,600	41.9	2,650	60,800	97%
Winchester 760	40.5	2,415	41.6	2,475	42.8	2,535	43.9	2,595	45.0	2,650	60,700	104%
Alliant Power Pro 2000-MR	38.3	2,385	39.4	2,445	40.5	2,500	41.5	2,555	42.6	2,610	60,700	100%
Alliant Reloder 15	36.6	2,395	37.6	2,445	38.7	2,505	39.7	2,555	40.7	2,610	60,800	97%
IMR 4955	41.9	2,360	43.0	2,420	44.2	2,480	45.4	2,545	46.5	2,605	60,600	105%
IMR 4007 SSC	39.3	2,360	40.4	2,415	41.5	2,475	42.6	2,530	43.7	2,590	59,600	105%
Hodgdon BL-C(2)	36.8	2,365	37.8	2,415	38.8	2,470	39.9	2,525	40.9	2,580	60,800	92%
Accurate 4064	36.2	2,355	37.2	2,410	38.2	2,460	39.2	2,515	40.2	2,570	61,000	100%
IMR 4064	35.5	2,360	36.5	2,410	37.5	2,465	38.4	2,510	39.4	2,565	60,800	95%
Accurate 2700	38.7	2,340	39.8	2,395	40.9	2,450	41.9	2,505	43.0	2,560	60,800	98%
Hodgdon Varget	35.3	2,345	36.3	2,400	37.3	2,455	38.2	2,500	39.2	2,555	60,800	91%
Shooters World Precision Rifle	35.8	2,340	36.8	2,390	37.8	2,445	38.8	2,500	39.8	2,550	60,700	99%

175 gr Bullet · 25" barrel

COAL: 2.745" • Bullet length: 1.475" • Seat depth: 0.765" • Usable capacity: 43.3 / 54.9 gr H_2O

Powder	STEP 1 · 90%		STEP 2		STEP 3		STEP 4		STEP 5 · LIMIT			
	gr	fps	gr	fps	gr	fps	gr	fps	gr	fps	psi	Fill
Reload Swiss RS52	37.5	2,415	38.5	2,465	39.6	2,525	40.7	2,585	41.7	2,640	60,900	101%
Reload Swiss RS60	39.7	2,385	40.8	2,440	41.9	2,500	43.0	2,560	44.1	2,620	61,000	105%
Hodgdon Leverevolution	36.9	2,395	37.9	2,450	39.0	2,505	40.0	2,560	41.0	2,615	60,700	90%
Winchester StaBALL 6.5	40.6	2,380	41.7	2,435	42.9	2,495	44.0	2,555	45.1	2,610	57,700	105%
Ramshot Big Game	39.0	2,365	40.1	2,420	41.1	2,475	42.2	2,530	43.3	2,590	60,800	102%
Vihtavuori N550	38.4	2,370	39.5	2,425	40.5	2,475	41.6	2,530	42.7	2,590	60,900	104%
Hodgdon H414	39.3	2,355	40.4	2,410	41.5	2,470	42.6	2,525	43.7	2,585	60,900	103%
Hodgdon H4350	39.1	2,355	40.2	2,410	41.3	2,470	42.3	2,520	43.4	2,580	61,000	101%
Winchester 760	39.4	2,350	40.5	2,405	41.6	2,465	42.7	2,525	43.8	2,580	61,000	104%
Alliant Reloder 17	38.6	2,345	39.7	2,400	40.8	2,460	41.8	2,515	42.9	2,575	60,600	99%
Winchester 748	36.6	2,355	37.6	2,410	38.7	2,465	39.7	2,520	40.7	2,575	60,800	97%
Hodgdon H380	38.0	2,330	39.0	2,385	40.1	2,440	41.2	2,495	42.2	2,550	60,800	103%
Hodgdon CFE 223	37.0	2,330	38.0	2,385	39.0	2,435	40.1	2,495	41.1	2,545	60,900	97%
Alliant Reloder 15	35.6	2,325	36.6	2,380	37.5	2,425	38.5	2,480	39.5	2,530	61,000	97%
Shooters World Match Rifle	35.4	2,320	36.4	2,375	37.3	2,425	38.3	2,480	39.3	2,530	60,800	93%
IMR 4007 SSC	38.2	2,295	39.3	2,350	40.3	2,405	41.4	2,460	42.4	2,515	59,400	105%
Shooters World The Creed	35.4	2,290	36.4	2,345	37.3	2,390	38.3	2,445	39.3	2,495	60,700	94%
Accurate 2700	37.6	2,270	38.6	2,320	39.7	2,380	40.8	2,435	41.8	2,490	60,900	98%
IMR 4064	34.4	2,285	35.4	2,335	36.3	2,385	37.3	2,440	38.2	2,485	60,900	94%
Hodgdon Varget	34.2	2,270	35.2	2,325	36.1	2,375	37.0	2,425	38.0	2,475	60,700	91%

7x57 Mauser

Paul Mauser designed the 7x57mm Mauser in 1892. It was one of the first rimless and bottlenecked smokeless-powder rifle cartridges. Spain adopted it in 1893 with the Mauser Model 1893 rifle. Many other countries used it afterward. These included Brazil, Chile, Colombia, Mexico and Serbia. Boer forces in South Africa used it as well. In Britain John Rigby & Co. and others sold rifles in this chambering. The cartridge has sometimes been called the .275 Rigby.

The 7x57 became a widely used sporting cartridge. Ivory hunter W.D.M. Bell shot about 800 elephants with it. He used Rigby-Mauser rifles and military round-nose full-metal-jacket bullets for penetration. Eleanor O'Connor was the wife of writer Jack O'Connor. She used the 7x57 to take both small and large game on hunts around the world. Modern factory loads use bullets of roughly 120 to 175 grains. Loads are generally kept moderate in consideration of older rifles. The cartridge is the parent of the .257 Roberts and the 6mm Remington.

Cartridge specifications	
Bullet Diameter	**0.284" (7.21 mm)**
Max Case Length	**2.235" (56.77 mm)**
Case Trim Length	**2.225" (56.52 mm)**
Max COAL	**3.065" (77.85 mm)**
Primer Pocket	**Large Rifle**
Standard Twist	**1:9"**
Case Capacity	**59.6 gr H_2O**
Max Pressure	**51,000 psi (SAAMI)**

110 gr Bullet · 25" barrel

COAL: 2.970" • Bullet length: 1.048" • Seat depth: 0.312" • Usable capacity: 54.6 / 59.6 gr H_2O

Powder	STEP 1 · 90%		STEP 2		STEP 3		STEP 4		STEP 5 · LIMIT			
	gr	fps	gr	fps	gr	fps	gr	fps	gr	fps	psi	Fill
Hodgdon Leverevolution	42.6	2,880	43.8	2,945	45.0	3,015	46.1	3,075	47.3	3,140	50,800	83%
Shooters World Precision Rifle	42.9	2,865	44.1	2,930	45.3	2,995	46.5	3,060	47.7	3,125	51,000	97%
Vihtavuori N550	45.3	2,870	46.5	2,930	47.8	2,995	49.0	3,055	50.3	3,125	50,800	97%
Reload Swiss RS52	42.7	2,860	43.9	2,925	45.0	2,985	46.2	3,050	47.4	3,115	50,800	91%
Shooters World Match Rifle	41.8	2,850	42.9	2,910	44.1	2,975	45.3	3,040	46.4	3,100	50,900	88%
Alliant Reloder 15	42.0	2,835	43.2	2,900	44.4	2,960	45.5	3,020	46.7	3,085	50,900	91%
Alliant Reloder 16	46.0	2,820	47.3	2,885	48.5	2,950	49.8	3,015	51.1	3,085	50,800	104%
Ramshot Big Game	45.0	2,810	46.3	2,875	47.5	2,940	48.8	3,005	50.0	3,070	50,800	93%
IMR 4064	41.1	2,810	42.3	2,875	43.4	2,935	44.6	3,000	45.7	3,060	50,900	90%
Reload Swiss RS50	42.6	2,790	43.8	2,855	45.0	2,915	46.1	2,975	47.3	3,040	50,900	91%
Reload Swiss RS60	45.9	2,750	47.2	2,825	48.5	2,895	49.7	2,960	51.0	3,030	50,900	96%
Winchester 760	45.5	2,755	46.8	2,825	48.0	2,890	49.3	2,955	50.6	3,025	51,000	95%
IMR 4350	46.4	2,745	47.7	2,810	49.0	2,880	50.2	2,945	51.5	3,015	50,900	101%
IMR 4895	39.9	2,770	41.0	2,830	42.1	2,890	43.2	2,950	44.3	3,010	50,700	84%
Norma 204	46.7	2,725	48.0	2,795	49.3	2,860	50.6	2,930	51.9	3,000	50,900	100%
Hodgdon H380	43.5	2,740	44.7	2,805	45.9	2,870	47.1	2,930	48.3	2,995	50,900	94%
Vihtavuori N160	47.4	2,720	48.7	2,785	50.0	2,850	51.4	2,925	52.7	2,990	50,800	105%
Hodgdon Hybrid 100V	45.1	2,705	46.4	2,780	47.6	2,845	48.9	2,915	50.1	2,985	50,900	103%
Hodgdon Varget	39.8	2,735	40.9	2,795	42.0	2,860	43.1	2,920	44.2	2,980	50,900	84%
IMR 4320	40.1	2,715	41.2	2,780	42.3	2,840	43.4	2,900	44.5	2,965	50,800	82%

120 gr Bullet · 25" barrel

COAL: 2.850" • Bullet length: 1.097" • Seat depth: 0.482" • Usable capacity: 52.1 / 59.6 gr H_2O

Powder	STEP 1 · 90%		STEP 2		STEP 3		STEP 4		STEP 5 · LIMIT			
	gr	fps	gr	fps	gr	fps	gr	fps	gr	fps	psi	Fill
Hodgdon Leverevolution	40.6	2,745	41.7	2,805	42.9	2,870	44.0	2,930	45.1	2,995	50,800	83%
Reload Swiss RS52	40.8	2,735	41.9	2,795	43.0	2,855	44.2	2,920	45.3	2,980	50,900	91%
Shooters World Precision Rifle	40.8	2,730	41.9	2,790	43.0	2,850	44.2	2,915	45.3	2,975	50,700	96%
Vihtavuori N550	43.0	2,735	44.2	2,795	45.4	2,855	46.6	2,915	47.8	2,975	50,800	96%
Shooters World Match Rifle	39.9	2,715	41.0	2,780	42.1	2,840	43.2	2,900	44.3	2,960	50,900	87%
Alliant Reloder 16	43.7	2,695	44.9	2,755	46.2	2,825	47.4	2,885	48.6	2,950	50,800	103%
Accurate 4350	45.4	2,680	46.6	2,745	47.9	2,810	49.1	2,875	50.4	2,945	50,800	101%
Alliant Reloder 15	40.0	2,705	41.1	2,765	42.2	2,820	43.3	2,880	44.4	2,940	51,000	91%
Alliant Power Pro 2000-MR	41.9	2,680	43.0	2,740	44.2	2,805	45.4	2,865	46.5	2,925	51,000	94%
Accurate 2700	43.2	2,660	44.4	2,725	45.6	2,785	46.8	2,850	48.0	2,915	50,900	94%
IMR 4064	39.1	2,680	40.2	2,740	41.3	2,800	42.3	2,855	43.4	2,910	50,900	89%
Vihtavuori N140	39.3	2,665	40.4	2,725	41.5	2,785	42.6	2,845	43.7	2,905	50,800	85%
IMR 4350	44.2	2,635	45.4	2,700	46.7	2,770	47.9	2,830	49.1	2,895	50,800	101%
Vihtavuori N150	39.6	2,660	40.7	2,720	41.8	2,775	42.9	2,835	44.0	2,895	51,000	95%
Winchester 760	43.5	2,645	44.7	2,710	45.9	2,770	47.1	2,835	48.3	2,895	50,900	95%
Hodgdon H380	41.4	2,620	42.5	2,675	43.7	2,740	44.9	2,800	46.0	2,860	50,800	94%
Alliant Power Pro 4000-MR	45.2	2,595	46.5	2,660	47.7	2,725	49.0	2,790	50.2	2,855	50,800	98%
Hodgdon Varget	37.8	2,605	38.8	2,660	39.9	2,725	41.0	2,785	42.0	2,840	50,700	84%
Alliant Reloder 19	46.2	2,565	47.5	2,630	48.8	2,700	50.0	2,760	51.3	2,830	50,800	105%
Hodgdon H4350	42.7	2,575	43.9	2,640	45.0	2,695	46.2	2,760	47.4	2,825	50,800	92%

140 gr Bullet · 25" barrel

COAL: 2.975" • Bullet length: 1.172" • Seat depth: 0.432" • Usable capacity: 53.0 / 59.6 gr H_2O

Powder	STEP 1 · 90%		STEP 2		STEP 3		STEP 4		STEP 5 · LIMIT			
	gr	fps	gr	fps	gr	fps	gr	fps	gr	fps	psi	Fill
Hodgdon SUPERFORMANCE	46.3	2,560	47.6	2,625	48.8	2,685	50.1	2,750	51.4	2,815	51,000	95%
Alliant Reloder 26	48.5	2,545	49.9	2,610	51.2	2,675	52.5	2,735	53.9	2,805	50,800	102%
Accurate 4350	44.3	2,555	45.5	2,615	46.8	2,675	48.0	2,735	49.2	2,795	50,900	97%
Alliant Reloder 23	46.1	2,550	47.4	2,610	48.7	2,675	49.9	2,735	51.2	2,795	50,300	105%
Vihtavuori N555	45.1	2,550	46.4	2,610	47.6	2,670	48.9	2,735	50.1	2,795	50,800	102%
Alliant Reloder 22	47.1	2,530	48.4	2,590	49.7	2,655	51.0	2,720	52.3	2,785	49,600	105%
Reload Swiss RS62	45.4	2,525	46.6	2,585	47.9	2,650	49.1	2,710	50.4	2,780	50,800	99%
IMR 4350	42.8	2,500	44.0	2,560	45.2	2,620	46.4	2,680	47.6	2,740	51,000	96%
Ramshot Hunter	44.2	2,500	45.4	2,560	46.7	2,620	47.9	2,680	49.1	2,740	51,000	98%
Norma 204	43.7	2,495	44.9	2,555	46.2	2,615	47.4	2,675	48.6	2,735	50,900	96%
Hodgdon H4831SC	46.2	2,480	47.5	2,545	48.8	2,605	50.0	2,665	51.3	2,730	50,800	97%
Winchester 760	42.3	2,495	43.5	2,555	44.6	2,610	45.8	2,670	47.0	2,730	50,800	91%
Alliant Power Pro 4000-MR	44.3	2,475	45.5	2,535	46.8	2,600	48.0	2,655	49.2	2,715	50,900	95%
Alliant Reloder 15	38.1	2,495	39.1	2,545	40.2	2,600	41.3	2,655	42.3	2,705	50,900	85%
IMR 4064	37.4	2,480	38.5	2,535	39.5	2,585	40.5	2,635	41.6	2,690	51,000	84%
IMR 7828	46.8	2,430	48.1	2,490	49.4	2,555	50.7	2,620	52.0	2,680	50,800	99%
Vihtavuori N140	37.6	2,460	38.6	2,510	39.7	2,565	40.8	2,620	41.8	2,670	51,000	80%
Winchester Supreme 780	47.8	2,420	49.1	2,480	50.5	2,545	51.8	2,610	53.1	2,670	50,900	101%
Hodgdon H4350	41.0	2,430	42.1	2,485	43.3	2,545	44.5	2,605	45.6	2,660	50,800	87%
IMR 4831	42.9	2,405	44.1	2,465	45.3	2,525	46.5	2,585	47.7	2,645	50,800	97%

150 gr Bullet · 25" barrel

COAL: 2.900" • Bullet length: 1.305" • Seat depth: 0.640" • Usable capacity: 49.9 / 59.6 gr H_2O

Powder	STEP 1 · 90%		STEP 2		STEP 3		STEP 4		STEP 5 · LIMIT			
	gr	fps	gr	fps	gr	fps	gr	fps	gr	fps	psi	Fill
Alliant Reloder 26	46.1	2,445	47.4	2,505	48.7	2,570	49.9	2,630	51.2	2,695	50,800	103%
Hodgdon SUPERFORMANCE	43.9	2,450	45.1	2,510	46.3	2,570	47.6	2,635	48.8	2,695	50,900	96%
Vihtavuori N555	42.8	2,450	44.0	2,505	45.2	2,565	46.4	2,625	47.6	2,685	50,800	102%
Accurate 4350	42.0	2,445	43.2	2,500	44.4	2,560	45.5	2,615	46.7	2,680	50,900	98%
Alliant Reloder 23	43.5	2,430	44.7	2,485	45.9	2,545	47.1	2,605	48.3	2,665	49,400	105%
Reload Swiss RS62	43.1	2,420	44.3	2,480	45.5	2,545	46.7	2,605	47.9	2,665	50,800	100%
Alliant Reloder 22	44.4	2,410	45.6	2,470	46.8	2,530	48.1	2,595	49.3	2,655	48,700	105%
Reload Swiss RS70	43.7	2,385	44.9	2,445	46.2	2,510	47.4	2,565	48.6	2,625	50,900	98%
IMR 4350	40.6	2,395	41.7	2,450	42.9	2,510	44.0	2,565	45.1	2,620	50,900	97%
Ramshot Hunter	41.9	2,390	43.1	2,450	44.3	2,510	45.4	2,560	46.6	2,620	50,900	99%
Hodgdon H4831SC	43.8	2,375	45.0	2,435	46.3	2,500	47.5	2,560	48.7	2,615	50,800	98%
Norma 204	41.5	2,385	42.6	2,440	43.8	2,500	45.0	2,560	46.1	2,615	50,800	97%
Alliant Reloder 19	42.9	2,365	44.1	2,425	45.3	2,490	46.5	2,550	47.7	2,610	50,800	101%
Winchester 760	40.1	2,385	41.2	2,440	42.4	2,500	43.5	2,555	44.6	2,610	50,800	92%
Alliant Power Pro 4000-MR	42.0	2,370	43.2	2,430	44.4	2,485	45.5	2,540	46.7	2,600	50,900	95%
Vihtavuori N160	41.7	2,375	42.9	2,435	44.0	2,485	45.1	2,540	46.3	2,600	51,000	101%
Alliant Reloder 15	36.0	2,375	37.0	2,425	38.0	2,475	39.0	2,525	40.0	2,575	50,900	86%
IMR 4064	35.4	2,360	36.4	2,415	37.3	2,460	38.3	2,510	39.3	2,565	51,000	84%
Vihtavuori N165	43.9	2,335	45.1	2,390	46.3	2,450	47.6	2,510	48.8	2,565	49,300	105%
IMR 7828SSC	43.3	2,315	44.5	2,375	45.7	2,435	46.9	2,490	48.1	2,550	50,800	100%

160 gr Bullet · 25" barrel

COAL: 2.975" • Bullet length: 1.403" • Seat depth: 0.663" • Usable capacity: 49.4 / 59.6 gr H_2O

Powder	STEP 1 · 90%		STEP 2		STEP 3		STEP 4		STEP 5 · LIMIT			
	gr	fps	gr	fps	gr	fps	gr	fps	gr	fps	psi	Fill
Alliant Reloder 26	45.1	2,380	46.4	2,440	47.6	2,500	48.9	2,560	50.1	2,620	50,800	102%
Hodgdon SUPERFORMANCE	42.9	2,380	44.1	2,435	45.3	2,495	46.5	2,555	47.7	2,615	50,800	94%
Alliant Reloder 22	43.9	2,370	45.1	2,430	46.3	2,490	47.6	2,550	48.8	2,610	50,200	105%
Alliant Reloder 23	43.0	2,380	44.2	2,435	45.4	2,495	46.6	2,550	47.8	2,610	50,900	105%
Vihtavuori N555	41.7	2,380	42.9	2,440	44.0	2,490	45.1	2,545	46.3	2,605	50,900	101%
Accurate 4350	41.0	2,365	42.1	2,420	43.3	2,475	44.5	2,535	45.6	2,590	50,900	96%
Reload Swiss RS62	42.2	2,355	43.4	2,415	44.5	2,470	45.7	2,530	46.9	2,590	50,900	99%
Alliant Reloder 19	42.0	2,305	43.2	2,365	44.4	2,425	45.5	2,480	46.7	2,540	50,800	100%
IMR 4350	39.5	2,315	40.6	2,370	41.7	2,420	42.8	2,475	43.9	2,530	50,900	95%
Winchester 760	39.2	2,305	40.3	2,360	41.4	2,415	42.5	2,470	43.6	2,525	51,000	91%
Alliant Power Pro 4000-MR	41.1	2,295	42.3	2,355	43.4	2,410	44.6	2,465	45.7	2,520	51,000	94%
Vihtavuori N165	43.4	2,290	44.6	2,345	45.8	2,405	47.0	2,460	48.2	2,515	50,900	105%
Vihtavuori N160	40.6	2,295	41.7	2,345	42.9	2,405	44.0	2,455	45.1	2,510	51,000	99%
Winchester Supreme 780	44.4	2,270	45.6	2,325	46.8	2,385	48.1	2,445	49.3	2,505	50,800	100%
Hodgdon H4831	42.3	2,270	43.5	2,330	44.6	2,380	45.8	2,440	47.0	2,495	50,800	102%
Ramshot Grand	45.8	2,255	47.1	2,315	48.3	2,370	49.6	2,430	50.9	2,495	48,400	105%
Accurate MagPro	45.7	2,245	47.0	2,310	48.3	2,370	49.5	2,425	50.8	2,490	50,300	105%
Reload Swiss RS76	46.3	2,255	47.6	2,315	48.8	2,370	50.1	2,430	51.4	2,490	48,400	105%
IMR 4831	40.0	2,250	41.1	2,305	42.2	2,360	43.3	2,415	44.4	2,470	50,900	96%
Hodgdon H4350	37.8	2,250	38.8	2,300	39.9	2,355	41.0	2,410	42.0	2,460	50,900	86%

168 gr Bullet · 25" barrel

COAL: 2.980" • Bullet length: 1.426" • Seat depth: 0.681" • Usable capacity: 49.2 / 59.6 gr H_2O

Powder	STEP 1 · 90%		STEP 2		STEP 3		STEP 4		STEP 5 · LIMIT			
	gr	fps	gr	fps	gr	fps	gr	fps	gr	fps	psi	Fill
Alliant Reloder 22	43.6	2,345	44.8	2,400	46.0	2,460	47.2	2,515	48.4	2,575	50,900	104%
Alliant Reloder 26	44.6	2,340	45.8	2,400	47.0	2,455	48.3	2,515	49.5	2,575	50,900	101%
Vihtavuori N560	44.5	2,350	45.7	2,405	47.0	2,465	48.2	2,515	49.4	2,570	49,500	105%
Hodgdon SUPERFORMANCE	42.4	2,340	43.6	2,395	44.8	2,450	45.9	2,505	47.1	2,565	50,900	94%
Alliant Reloder 23	42.4	2,330	43.6	2,390	44.8	2,445	45.9	2,495	47.1	2,555	50,800	104%
Vihtavuori N555	40.9	2,330	42.0	2,380	43.1	2,435	44.3	2,490	45.4	2,545	50,800	99%
Reload Swiss RS62	41.7	2,315	42.9	2,375	44.0	2,430	45.1	2,485	46.3	2,540	50,900	98%
Accurate 4350	40.4	2,315	41.5	2,370	42.6	2,420	43.8	2,480	44.9	2,535	50,800	95%
Hodgdon H4831SC	42.4	2,275	43.6	2,330	44.8	2,385	45.9	2,440	47.1	2,495	51,000	96%
Ramshot Hunter	40.4	2,270	41.5	2,320	42.6	2,375	43.8	2,430	44.9	2,485	50,900	97%
Winchester StaBALL 6.5	39.5	2,275	40.6	2,325	41.7	2,380	42.8	2,430	43.9	2,485	50,800	90%
Norma MRP	42.0	2,255	43.2	2,310	44.4	2,370	45.5	2,420	46.7	2,480	50,900	99%
IMR 4350	38.8	2,260	39.9	2,315	41.0	2,365	42.0	2,415	43.1	2,470	50,900	94%
Reload Swiss RS76	46.1	2,235	47.4	2,290	48.7	2,350	49.9	2,405	51.2	2,465	49,500	105%
Winchester 760	38.6	2,255	39.7	2,310	40.8	2,360	41.8	2,410	42.9	2,465	50,900	90%
Winchester Supreme 780	43.8	2,235	45.0	2,290	46.3	2,355	47.5	2,410	48.7	2,465	51,000	100%
Vihtavuori N165	42.7	2,245	43.9	2,300	45.0	2,350	46.2	2,405	47.4	2,460	50,800	103%
Vihtavuori N160	39.9	2,240	41.0	2,290	42.1	2,345	43.2	2,395	44.3	2,445	50,900	98%
IMR 4831	39.4	2,205	40.5	2,260	41.6	2,315	42.7	2,370	43.8	2,425	50,800	96%
Hodgdon H4350	37.1	2,200	38.1	2,250	39.2	2,300	40.2	2,350	41.2	2,400	50,800	84%

175 gr Bullet · 25" barrel

COAL: 2.940" • Bullet length: 1.513" • Seat depth: 0.808" • Usable capacity: 47.4 / 59.6 gr H_2O

Powder	STEP 1 · 90%		STEP 2		STEP 3		STEP 4		STEP 5 · LIMIT			
	gr	fps	gr	fps	gr	fps	gr	fps	gr	fps	psi	Fill
Alliant Reloder 22	42.1	2,275	43.3	2,330	44.5	2,390	45.6	2,445	46.8	2,500	51,000	105%
Alliant Reloder 26	43.0	2,270	44.2	2,325	45.4	2,385	46.6	2,440	47.8	2,500	50,800	101%
Alliant Reloder 23	41.0	2,260	42.1	2,315	43.3	2,370	44.5	2,430	45.6	2,485	51,000	104%
Hodgdon SUPERFORMANCE	41.0	2,270	42.1	2,320	43.3	2,380	44.4	2,430	45.5	2,485	50,800	94%
Vihtavuori N560	42.8	2,275	44.0	2,325	45.1	2,375	46.3	2,430	47.5	2,485	48,900	105%
Vihtavuori N555	39.5	2,260	40.6	2,315	41.7	2,370	42.8	2,420	43.9	2,475	50,900	99%
Reload Swiss RS62	40.2	2,240	41.3	2,295	42.5	2,355	43.6	2,410	44.7	2,465	50,700	98%
Reload Swiss RS70	40.8	2,215	41.9	2,265	43.0	2,320	44.2	2,375	45.3	2,430	50,800	96%
Alliant Reloder 19	40.1	2,205	41.2	2,255	42.4	2,315	43.5	2,370	44.6	2,425	50,900	100%
Hodgdon H4831SC	41.0	2,205	42.1	2,260	43.3	2,315	44.4	2,370	45.5	2,420	51,000	97%
Winchester StaBALL 6.5	38.3	2,210	39.3	2,255	40.4	2,310	41.5	2,360	42.5	2,410	51,000	90%
IMR 4955	39.7	2,190	40.8	2,245	41.9	2,300	43.0	2,350	44.1	2,405	50,800	94%
Norma MRP	40.6	2,190	41.7	2,240	42.9	2,300	44.0	2,350	45.1	2,405	50,900	99%
Hodgdon H414	37.3	2,190	38.3	2,240	39.3	2,290	40.4	2,345	41.4	2,395	50,800	89%
IMR 4350	37.4	2,190	38.5	2,240	39.5	2,290	40.5	2,340	41.6	2,390	50,900	94%
Ramshot Grand	43.9	2,160	45.1	2,215	46.3	2,270	47.6	2,330	48.8	2,390	48,800	105%
Accurate 2700	37.1	2,185	38.1	2,235	39.2	2,290	40.2	2,340	41.2	2,385	50,800	89%
Winchester 760	37.3	2,185	38.3	2,235	39.3	2,280	40.4	2,335	41.4	2,385	50,700	90%
Reload Swiss RS76	44.4	2,160	45.6	2,215	46.8	2,265	48.1	2,325	49.3	2,380	48,900	105%
IMR 4831	38.2	2,145	39.3	2,200	40.3	2,250	41.4	2,305	42.4	2,355	51,000	96%

7x64 Brenneke

German gunmaker Wilhelm Brenneke designed the 7x64mm in 1917. To make it he necked down his 8x64mm S cartridge of 1912 to 7mm. His aim was a ballistic improvement on the 7x57mm Mauser for Mauser 98 bolt-action rifles. The new round gives about 10 to 12 percent more muzzle velocity than the 7x57mm. At the same time Brenneke developed a rimmed version called the 7x65mmR for break-action rifles. Both cartridges are standardized by the Commission Internationale Permanente (C.I.P.).

Factory loads range from bullets of about 140 grains at roughly 3,000 fps to bullets of about 175 grains at roughly 2,700 fps. The .280 Remington is its closest American ballistic counterpart. The 7x64mm became very popular in Central Europe for hunting game of all sizes. Its popularity grew where military cartridges were restricted for civilian use. European manufacturers continue to chamber rifles for it. Ammunition is widely available.

Cartridge specifications	
Bullet Diameter	**0.284" (7.21 mm)**
Max Case Length	**2.520" (64.00 mm)**
Case Trim Length	**2.510" (63.75 mm)**
Max COAL	**3.307" (84.00 mm)**
Primer Pocket	**Large Rifle**
Standard Twist	**1:9"**
Case Capacity	**69.0 gr H_2O**
Max Pressure	**55,000 psi (SAAMI)**

120 gr Bullet · 25" barrel

COAL: 3.228" • Bullet length: 1.097" • Seat depth: 0.389" • Usable capacity: 63.0 / 69.0 gr H_2O

Powder	STEP 1 · 90%		STEP 2		STEP 3		STEP 4		STEP 5 · LIMIT			
	gr	fps	gr	fps	gr	fps	gr	fps	gr	fps	psi	Fill
Accurate 4350	54.5	2,940	56.0	3,010	57.5	3,085	59.0	3,155	60.5	3,225	54,800	100%
Alliant Reloder 26	59.2	2,910	60.9	2,990	62.5	3,065	64.2	3,145	65.8	3,220	54,600	105%
Winchester StaBALL 6.5	53.9	2,945	55.4	3,010	56.9	3,080	58.4	3,150	59.9	3,220	54,900	96%
Vihtavuori N555	55.4	2,920	56.9	2,990	58.5	3,065	60.0	3,135	61.5	3,210	54,900	105%
Hodgdon SUPERFORMANCE	56.0	2,915	57.5	2,985	59.1	3,060	60.7	3,135	62.2	3,205	54,800	97%
Hodgdon Leverevolution	48.3	2,935	49.6	3,000	51.0	3,065	52.4	3,135	53.7	3,195	54,900	81%
Reload Swiss RS62	55.3	2,890	56.8	2,960	58.3	3,035	59.9	3,110	61.4	3,185	54,900	101%
Norma 204	53.7	2,875	55.2	2,945	56.7	3,015	58.2	3,090	59.7	3,160	54,800	100%
Accurate 2700	51.6	2,880	53.0	2,945	54.5	3,015	55.9	3,080	57.3	3,145	55,000	93%
Vihtavuori N550	50.0	2,890	51.4	2,950	52.8	3,015	54.2	3,075	55.6	3,140	54,900	93%
Alliant Power Pro 4000-MR	54.5	2,855	56.0	2,925	57.5	2,995	59.0	3,065	60.5	3,135	55,000	98%
Norma MRP	56.4	2,840	58.0	2,910	59.5	2,980	61.1	3,055	62.7	3,130	54,800	103%
Vihtavuori N160	54.1	2,855	55.6	2,920	57.1	2,990	58.6	3,060	60.1	3,130	54,800	104%
Hodgdon H4831SC	56.2	2,835	57.8	2,905	59.3	2,975	60.9	3,050	62.4	3,120	55,000	100%
Reload Swiss RS70	55.9	2,830	57.5	2,905	59.0	2,975	60.5	3,045	62.1	3,120	54,900	99%
IMR 7828SSC	57.2	2,815	58.8	2,885	60.4	2,960	62.0	3,035	63.6	3,115	54,100	105%
Reload Swiss RS60	50.9	2,825	52.3	2,895	53.8	2,965	55.2	3,035	56.6	3,100	55,000	92%
Vihtavuori N150	46.8	2,835	48.1	2,900	49.4	2,960	50.7	3,020	52.0	3,080	54,800	93%
Vihtavuori N540	46.3	2,840	47.6	2,900	48.8	2,955	50.1	3,015	51.4	3,070	54,900	87%
Shooters World SW4350	53.3	2,790	54.8	2,860	56.3	2,930	57.7	2,990	59.2	3,060	54,800	102%

140 gr Bullet · 25" barrel

COAL: 3.205" • Bullet length: 1.135" • Seat depth: 0.450" • Usable capacity: 62.2 / 69.0 gr H_2O

Powder	STEP 1 · 90%		STEP 2		STEP 3		STEP 4		STEP 5 · LIMIT			
	gr	fps	gr	fps	gr	fps	gr	fps	gr	fps	psi	Fill
Alliant Reloder 26	57.1	2,765	58.7	2,835	60.3	2,905	61.8	2,975	63.4	3,045	54,900	102%
Alliant Reloder 23	54.2	2,750	55.7	2,815	57.2	2,885	58.7	2,950	60.2	3,015	54,400	105%
Accurate 4350	52.1	2,750	53.5	2,815	55.0	2,880	56.5	2,950	57.9	3,010	55,000	97%
Hodgdon SUPERFORMANCE	53.7	2,740	55.2	2,810	56.7	2,875	58.2	2,940	59.7	3,010	54,900	94%
Vihtavuori N560	56.3	2,750	57.8	2,810	59.4	2,875	61.0	2,945	62.5	3,010	53,200	105%
Reload Swiss RS62	53.1	2,725	54.6	2,795	56.0	2,860	57.5	2,925	59.0	2,995	54,900	99%
Vihtavuori N555	52.2	2,735	53.7	2,800	55.1	2,865	56.5	2,925	58.0	2,995	54,900	100%
Winchester StaBALL 6.5	51.4	2,730	52.8	2,790	54.3	2,855	55.7	2,915	57.1	2,980	55,000	93%
Hodgdon Hybrid 100V	50.0	2,695	51.4	2,760	52.8	2,825	54.2	2,895	55.6	2,960	54,800	100%
IMR 7828SSC	55.0	2,680	56.5	2,745	58.0	2,815	59.6	2,885	61.1	2,950	55,000	102%
IMR 4350	50.4	2,695	51.8	2,755	53.2	2,815	54.6	2,880	56.0	2,945	54,900	97%
IMR 4955	52.8	2,675	54.3	2,740	55.8	2,810	57.2	2,875	58.7	2,940	55,000	95%
Reload Swiss RS70	53.6	2,670	55.1	2,740	56.6	2,805	58.1	2,875	59.6	2,940	54,800	97%
Winchester Supreme 780	56.3	2,650	57.8	2,715	59.4	2,785	61.0	2,855	62.5	2,925	54,900	101%
Vihtavuori N165	54.7	2,650	56.2	2,715	57.8	2,780	59.3	2,845	60.8	2,910	54,900	105%
Reload Swiss RS60	48.7	2,650	50.1	2,715	51.4	2,775	52.8	2,840	54.1	2,900	54,800	89%
Vihtavuori N160	51.4	2,655	52.8	2,715	54.3	2,780	55.7	2,840	57.1	2,900	54,800	100%
Vihtavuori N550	46.7	2,635	48.0	2,690	49.3	2,745	50.6	2,800	51.9	2,860	55,000	88%
Shooters World Long Rifle	46.5	2,585	47.8	2,640	49.1	2,700	50.4	2,760	51.7	2,815	54,800	91%
Vihtavuori N150	44.0	2,595	45.2	2,650	46.5	2,705	47.7	2,760	48.9	2,815	54,900	88%

150 gr Bullet · 25" barrel

COAL: 3.260" • Bullet length: 1.325" • Seat depth: 0.584" • Usable capacity: 60.1 / 69.0 gr H_2O

Powder	STEP 1 · 90%		STEP 2		STEP 3		STEP 4		STEP 5 · LIMIT			
	gr	fps	gr	fps	gr	fps	gr	fps	gr	fps	psi	Fill
Alliant Reloder 26	55.0	2,675	56.5	2,740	58.0	2,805	59.6	2,875	61.1	2,945	54,800	102%
Alliant Reloder 23	52.3	2,660	53.8	2,725	55.2	2,785	56.6	2,845	58.1	2,915	54,500	105%
Vihtavuori N560	54.3	2,655	55.8	2,720	57.3	2,780	58.8	2,845	60.3	2,910	53,700	105%
Hodgdon SUPERFORMANCE	51.8	2,650	53.3	2,715	54.7	2,775	56.1	2,840	57.6	2,905	55,000	94%
Accurate 4350	50.1	2,650	51.5	2,710	52.9	2,775	54.3	2,835	55.7	2,900	54,800	97%
Reload Swiss RS62	51.2	2,635	52.6	2,700	54.0	2,760	55.5	2,830	56.9	2,895	54,800	99%
Vihtavuori N555	50.1	2,640	51.5	2,700	52.9	2,760	54.3	2,825	55.7	2,885	54,900	100%
Norma MRP	52.2	2,590	53.7	2,655	55.1	2,715	56.5	2,775	58.0	2,845	55,000	100%
Reload Swiss RS70	51.8	2,590	53.2	2,650	54.6	2,715	56.1	2,780	57.5	2,845	54,900	97%
Winchester Supreme 780	54.3	2,570	55.8	2,635	57.3	2,700	58.8	2,765	60.3	2,835	54,900	101%
IMR 4350	48.4	2,590	49.8	2,655	51.1	2,710	52.4	2,770	53.8	2,830	54,900	96%
Vihtavuori N165	52.7	2,560	54.2	2,625	55.6	2,685	57.0	2,745	58.5	2,810	54,800	105%
Alliant Reloder 16	47.0	2,575	48.3	2,635	49.6	2,690	50.9	2,745	52.2	2,805	54,800	96%
Reload Swiss RS60	47.0	2,560	48.3	2,620	49.6	2,680	50.9	2,740	52.2	2,800	54,900	89%
Winchester 760	47.6	2,565	48.9	2,620	50.3	2,685	51.6	2,740	52.9	2,800	55,000	91%
Vihtavuori N160	49.4	2,555	50.8	2,615	52.1	2,670	53.5	2,730	54.9	2,795	54,800	99%
IMR 4451	47.5	2,535	48.8	2,595	50.1	2,650	51.5	2,715	52.8	2,775	54,800	91%
Reload Swiss RS52	43.6	2,555	44.8	2,610	46.0	2,665	47.2	2,720	48.4	2,775	54,800	85%
Shooters World SW4350	49.2	2,515	50.6	2,575	52.0	2,635	53.3	2,695	54.7	2,755	54,800	99%
Vihtavuori N550	44.7	2,525	46.0	2,580	47.2	2,630	48.5	2,685	49.7	2,740	54,900	87%

160 gr Bullet · 25" barrel

COAL: 3.270" • Bullet length: 1.446" • Seat depth: 0.695" • Usable capacity: 58.2 / 69.0 gr H_2O

Powder	STEP 1 · 90%		STEP 2		STEP 3		STEP 4		STEP 5 · LIMIT			
	gr	fps	gr	fps	gr	fps	gr	fps	gr	fps	psi	Fill
Alliant Reloder 26	53.1	2,580	54.6	2,645	56.0	2,710	57.5	2,775	59.0	2,840	54,800	102%
Vihtavuori N560	52.6	2,570	54.0	2,630	55.5	2,690	57.0	2,755	58.4	2,815	54,800	105%
Alliant Reloder 23	50.6	2,565	52.0	2,625	53.4	2,685	54.8	2,750	56.2	2,810	54,800	105%
Hodgdon SUPERFORMANCE	50.0	2,550	51.4	2,615	52.8	2,675	54.2	2,735	55.6	2,800	55,000	93%
Accurate 4350	48.4	2,550	49.8	2,615	51.1	2,670	52.4	2,730	53.8	2,790	55,000	97%
Reload Swiss RS62	49.5	2,545	50.9	2,605	52.3	2,670	53.6	2,730	55.0	2,790	54,900	98%
Alliant Reloder 22	50.6	2,525	52.0	2,585	53.4	2,645	54.8	2,710	56.2	2,770	54,800	102%
Alliant Reloder 19	49.5	2,505	50.9	2,565	52.3	2,630	53.6	2,685	55.0	2,750	54,900	100%
Ramshot Hunter	48.5	2,505	49.9	2,565	51.2	2,620	52.5	2,680	53.9	2,740	54,900	98%
Reload Swiss RS70	50.0	2,500	51.4	2,560	52.8	2,620	54.1	2,680	55.5	2,740	54,800	96%
Winchester Supreme 780	52.4	2,485	53.9	2,550	55.3	2,610	56.8	2,675	58.2	2,740	54,900	101%
IMR 4955	49.1	2,490	50.5	2,555	51.9	2,615	53.2	2,675	54.6	2,735	54,900	94%
Norma MRP	50.3	2,490	51.7	2,555	53.1	2,615	54.5	2,675	55.9	2,735	54,900	100%
Reload Swiss RS76	54.5	2,455	56.0	2,515	57.5	2,580	59.1	2,645	60.6	2,710	52,000	105%
Ramshot Magnum	54.8	2,435	56.3	2,500	57.8	2,560	59.4	2,630	60.9	2,695	52,200	105%
Reload Swiss RS60	45.4	2,465	46.6	2,520	47.9	2,580	49.1	2,635	50.4	2,695	54,900	89%
Vihtavuori N160	47.5	2,450	48.8	2,505	50.1	2,560	51.5	2,620	52.8	2,680	54,800	98%
Reload Swiss RS52	41.9	2,440	43.1	2,495	44.3	2,550	45.4	2,600	46.6	2,655	54,800	84%
Shooters World SW4350	47.5	2,420	48.8	2,475	50.1	2,530	51.5	2,590	52.8	2,650	54,800	98%
Vihtavuori N550	42.8	2,405	44.0	2,460	45.2	2,510	46.4	2,560	47.6	2,615	54,900	86%

175 gr Bullet · 25" barrel

COAL: 3.265" • Bullet length: 1.447" • Seat depth: 0.702" • Usable capacity: 58.3 / 69.0 gr H_2O

Powder	STEP 1 · 90%		STEP 2		STEP 3		STEP 4		STEP 5 · LIMIT			
	gr	fps	gr	fps	gr	fps	gr	fps	gr	fps	psi	Fill
Alliant Reloder 26	52.1	2,500	53.5	2,555	55.0	2,620	56.5	2,685	57.9	2,745	54,900	100%
Alliant Reloder 23	49.5	2,470	50.9	2,525	52.3	2,585	53.6	2,640	55.0	2,700	54,800	102%
Hodgdon SUPERFORMANCE	49.0	2,460	50.4	2,520	51.7	2,575	53.0	2,630	54.4	2,690	54,900	91%
Reload Swiss RS62	48.5	2,455	49.9	2,515	51.2	2,570	52.5	2,630	53.9	2,690	54,800	96%
Ramshot Grand	54.1	2,430	55.6	2,495	57.1	2,555	58.6	2,620	60.1	2,685	54,200	105%
Vihtavuori N560	50.9	2,455	52.3	2,510	53.7	2,565	55.1	2,625	56.5	2,680	54,800	101%
Accurate MagPro	53.6	2,420	55.1	2,485	56.6	2,550	58.1	2,610	59.6	2,675	55,000	104%
Alliant Reloder 19	48.6	2,425	50.0	2,485	51.3	2,540	52.6	2,595	54.0	2,660	54,900	98%
Reload Swiss RS70	49.0	2,415	50.4	2,470	51.7	2,530	53.0	2,585	54.4	2,645	54,800	94%
Vihtavuori N555	46.4	2,425	47.7	2,480	49.0	2,535	50.2	2,590	51.5	2,645	54,800	95%
IMR 7828SSC	49.7	2,410	51.1	2,470	52.5	2,525	53.8	2,580	55.2	2,640	54,800	98%
Norma MRP	49.2	2,400	50.6	2,460	52.0	2,520	53.3	2,575	54.7	2,635	54,800	97%
IMR 7828	49.6	2,385	51.0	2,445	52.4	2,500	53.7	2,555	55.1	2,615	54,900	95%
IMR 4350	45.3	2,385	46.5	2,435	47.8	2,490	49.0	2,540	50.3	2,595	54,800	93%
Reload Swiss RS60	44.4	2,375	45.6	2,425	46.8	2,480	48.1	2,535	49.3	2,590	54,800	87%
Vihtavuori N165	49.3	2,360	50.7	2,415	52.0	2,470	53.4	2,525	54.8	2,585	54,900	101%
Vihtavuori N170	52.4	2,365	53.9	2,420	55.3	2,475	56.8	2,530	58.2	2,585	54,900	104%
Vihtavuori N160	46.3	2,350	47.6	2,400	48.8	2,450	50.1	2,505	51.4	2,560	54,800	96%
Shooters World SW4350	46.5	2,325	47.8	2,380	49.1	2,435	50.4	2,485	51.7	2,540	54,800	96%
Reload Swiss RS52	40.9	2,330	42.0	2,380	43.1	2,430	44.3	2,485	45.4	2,530	54,800	82%

7x65R

German cartridge designer Wilhelm Brenneke developed the 7x65R as the rimmed counterpart of his 7x64mm. He had introduced the 7x64mm in 1917 by necking down his 8x64mm S design. The rimmed version dates from the same year. It was intended for break-action firearms that extract rimmed cases more reliably. These include single-shot rifles, double rifles, drillings and rifle-shotgun combination guns. The case is 65mm long. Like the rimless 7x64mm the cartridge became a commercial success soon after its introduction.

The 7x65R closely matches the ballistics of the 7x64mm and uses the same .284-inch bullets. Norma's 156-grain Oryx load is rated at 2,723 fps. Its 170-grain Vulkan load is rated at 2,657 fps. Norma, RWS, Sako and other European makers supply factory ammunition. It has long been one of the most popular chamberings for double rifles and combination guns in Central Europe. Hunters use it for red deer, wild boar and other European big game.

Cartridge specifications	
Bullet Diameter	**0.284" (7.21 mm)**
Max Case Length	**2.559" (65.00 mm)**
Case Trim Length	**2.549" (64.75 mm)**
Max COAL	**3.291" (83.60 mm)**
Primer Pocket	**Large Rifle**
Standard Twist	**1:9"**
Case Capacity	**67.9 gr H_2O**
Max Pressure	**3,800 bar / 55,114 psi (C.I.P.)**

139 gr Bullet · 25" barrel

COAL: 3.197" • Bullet length: 1.125" • Seat depth: 0.487" • Usable capacity: 60.5 / 67.9 gr H_2O

Powder	STEP 1 · 90%		STEP 2		STEP 3		STEP 4		STEP 5 · LIMIT			
	gr	fps	gr	fps	gr	fps	gr	fps	gr	fps	psi	Fill
Alliant Reloder 26	56.2	2,745	57.8	2,815	59.3	2,885	60.9	2,960	62.4	3,025	55,000	104%
Accurate 4350	51.3	2,735	52.7	2,800	54.1	2,865	55.6	2,930	57.0	2,995	54,900	98%
Hodgdon SUPERFORMANCE	52.9	2,725	54.4	2,795	55.8	2,855	57.3	2,925	58.8	2,995	54,900	95%
Vihtavuori N555	51.8	2,730	53.2	2,795	54.6	2,855	56.1	2,925	57.5	2,990	55,000	102%
Winchester StaBALL 6.5	50.8	2,725	52.2	2,785	53.6	2,850	55.0	2,910	56.4	2,975	55,100	94%
Alliant Reloder 23	52.7	2,705	54.2	2,775	55.6	2,835	57.0	2,900	58.5	2,965	52,600	105%
Alliant Reloder 22	53.6	2,685	55.1	2,755	56.5	2,820	58.0	2,885	59.5	2,955	54,900	104%
Ramshot Hunter	51.4	2,690	52.8	2,750	54.3	2,820	55.7	2,880	57.1	2,945	55,100	100%
Alliant Reloder 19	52.3	2,660	53.8	2,725	55.2	2,790	56.6	2,855	58.1	2,925	55,000	102%
Norma MRP	53.3	2,660	54.8	2,730	56.3	2,795	57.7	2,860	59.2	2,925	55,000	102%
Alliant Reloder 16	48.4	2,680	49.8	2,740	51.1	2,800	52.4	2,855	53.8	2,920	55,000	99%
Ramshot Big Game	48.2	2,680	49.5	2,735	50.9	2,800	52.2	2,855	53.5	2,915	55,000	90%
Vihtavuori N160	50.8	2,650	52.2	2,710	53.6	2,775	55.0	2,835	56.4	2,895	55,000	101%
IMR 4007 SSC	48.2	2,630	49.5	2,690	50.9	2,755	52.2	2,815	53.5	2,875	55,100	95%
Vihtavuori N550	46.4	2,640	47.7	2,700	49.0	2,755	50.2	2,810	51.5	2,865	55,000	89%
Vihtavuori N165	53.2	2,605	54.7	2,670	56.2	2,735	57.6	2,795	59.1	2,860	52,800	105%
Shooters World SW4350	50.3	2,600	51.7	2,660	53.1	2,720	54.5	2,785	55.9	2,850	55,000	100%
Shooters World Match Rifle	43.2	2,605	44.4	2,665	45.6	2,720	46.8	2,780	48.0	2,835	54,900	82%
Vihtavuori N150	43.6	2,600	44.8	2,655	46.0	2,710	47.2	2,765	48.4	2,820	55,000	90%
Vihtavuori N540	42.8	2,575	44.0	2,630	45.2	2,685	46.4	2,740	47.6	2,790	55,000	84%

150 gr Bullet · 25" barrel

COAL: 3.240" • Bullet length: 1.325" • Seat depth: 0.643" • Usable capacity: 58.1 / 67.9 gr H_2O

Powder	STEP 1 · 90%		STEP 2		STEP 3		STEP 4		STEP 5 · LIMIT			
	gr	fps	gr	fps	gr	fps	gr	fps	gr	fps	psi	Fill
Alliant Reloder 26	53.8	2,640	55.3	2,705	56.8	2,770	58.3	2,840	59.8	2,910	54,900	103%
Hodgdon SUPERFORMANCE	50.8	2,620	52.2	2,685	53.6	2,745	55.0	2,810	56.4	2,875	55,000	95%
Accurate 4350	49.1	2,620	50.5	2,685	51.9	2,745	53.2	2,805	54.6	2,870	54,900	98%
Vihtavuori N555	49.4	2,620	50.8	2,680	52.1	2,740	53.5	2,805	54.9	2,870	55,000	101%
Alliant Reloder 23	50.6	2,600	52.0	2,660	53.4	2,725	54.8	2,785	56.2	2,850	52,900	105%
Alliant Reloder 22	51.3	2,580	52.7	2,645	54.1	2,710	55.6	2,775	57.0	2,840	54,900	104%
Winchester StaBALL 6.5	48.6	2,600	50.0	2,665	51.3	2,720	52.6	2,780	54.0	2,840	55,100	94%
IMR 7828SSC	51.8	2,560	53.3	2,625	54.7	2,690	56.1	2,750	57.6	2,820	55,100	103%
Alliant Reloder 19	50.1	2,555	51.5	2,620	52.9	2,685	54.3	2,750	55.7	2,815	55,000	102%
IMR 4350	47.5	2,570	48.8	2,625	50.1	2,685	51.5	2,750	52.8	2,810	55,100	98%
Winchester Supreme 780	53.1	2,535	54.6	2,600	56.0	2,660	57.5	2,730	59.0	2,795	55,000	102%
IMR 7828	51.8	2,530	53.2	2,595	54.6	2,655	56.1	2,720	57.5	2,785	55,100	100%
Hodgdon H414	46.4	2,535	47.7	2,595	49.0	2,655	50.3	2,710	51.6	2,770	54,900	90%
Winchester 760	46.6	2,535	47.9	2,595	49.2	2,650	50.5	2,710	51.8	2,770	55,000	92%
Vihtavuori N160	48.4	2,530	49.8	2,590	51.1	2,645	52.4	2,705	53.8	2,765	54,900	100%
Vihtavuori N165	51.1	2,510	52.5	2,570	54.0	2,635	55.4	2,695	56.8	2,755	53,500	105%
Hodgdon H380	44.9	2,515	46.1	2,570	47.4	2,625	48.6	2,680	49.9	2,740	54,900	91%
Vihtavuori N550	44.1	2,510	45.3	2,565	46.5	2,615	47.8	2,670	49.0	2,725	55,100	89%
Vihtavuori N150	41.5	2,470	42.6	2,520	43.8	2,575	45.0	2,630	46.1	2,680	55,100	89%
Vihtavuori N540	40.7	2,440	41.8	2,490	43.0	2,545	44.1	2,595	45.2	2,645	54,900	83%

175 gr Bullet · 25" barrel

COAL: 3.240" • Bullet length: 1.491" • Seat depth: 0.810" • Usable capacity: 55.7 / 67.9 gr H_2O

Powder	STEP 1 · 90%		STEP 2		STEP 3		STEP 4		STEP 5 · LIMIT			
	gr	fps	gr	fps	gr	fps	gr	fps	gr	fps	psi	Fill
Alliant Reloder 26	50.6	2,460	52.0	2,520	53.4	2,580	54.8	2,640	56.2	2,705	54,900	101%
Alliant Reloder 23	48.2	2,435	49.5	2,490	50.9	2,555	52.2	2,610	53.5	2,665	54,900	104%
Vihtavuori N560	49.9	2,435	51.3	2,495	52.6	2,545	54.0	2,605	55.4	2,665	55,100	104%
Hodgdon SUPERFORMANCE	47.6	2,425	48.9	2,480	50.3	2,540	51.6	2,595	52.9	2,655	54,900	93%
Accurate 4350	46.0	2,415	47.3	2,475	48.5	2,525	49.8	2,585	51.1	2,640	54,900	96%
Alliant Reloder 22	48.2	2,405	49.5	2,460	50.9	2,520	52.2	2,575	53.5	2,635	54,900	102%
Reload Swiss RS62	46.7	2,400	48.0	2,455	49.3	2,515	50.6	2,570	51.9	2,630	55,100	97%
Alliant Reloder 19	47.2	2,385	48.5	2,445	49.8	2,500	51.1	2,560	52.4	2,615	55,000	100%
Winchester Supreme 780	49.9	2,370	51.3	2,430	52.6	2,485	54.0	2,545	55.4	2,610	54,900	100%
Norma MRP	47.9	2,370	49.2	2,425	50.5	2,480	51.9	2,540	53.2	2,600	55,000	99%
Alliant Power Pro 4000-MR	46.3	2,360	47.6	2,415	48.8	2,465	50.1	2,525	51.4	2,580	55,000	94%
Accurate 3100	47.1	2,335	48.4	2,390	49.7	2,450	51.0	2,505	52.3	2,565	55,100	102%
IMR 4350	44.1	2,355	45.3	2,405	46.5	2,455	47.8	2,515	49.0	2,565	54,900	94%
Vihtavuori N165	48.1	2,335	49.4	2,385	50.8	2,445	52.1	2,500	53.4	2,555	54,900	103%
Alliant Reloder 16	42.8	2,330	44.0	2,385	45.1	2,430	46.3	2,480	47.5	2,535	55,100	95%
Vihtavuori N160	45.1	2,320	46.4	2,375	47.6	2,425	48.9	2,480	50.1	2,535	55,000	98%
Vihtavuori N170	50.6	2,315	52.0	2,370	53.4	2,425	54.8	2,480	56.2	2,535	53,600	105%
Vihtavuori N550	40.4	2,265	41.5	2,310	42.6	2,355	43.8	2,410	44.9	2,455	54,900	85%
Vihtavuori N150	38.3	2,235	39.3	2,280	40.4	2,330	41.5	2,380	42.5	2,420	55,000	86%
Shooters World Precision Rifle	38.2	2,225	39.3	2,275	40.3	2,320	41.4	2,370	42.4	2,415	55,000	84%

.30 AR Remington

Remington introduced the .30 Remington AR in 2008 for its R-15 semi-automatic rifle. It was part of a project shared with other Freedom Group companies including Bushmaster and DPMS. The goal was to bring .30-caliber hunting performance closer to that of the .308 Winchester in a rifle the size of an AR-15. The case is derived from the .450 Bushmaster and has a rebated rim of .492 inch. The .450 Bushmaster itself descends from the .284 Winchester. The cartridge is standardized by SAAMI.

Remington's 125-grain load was listed at about 2,800 fps. In the R-15 the short and wide case required a single-stack magazine holding four rounds. The cartridge was intended for deer and similar game at moderate ranges. At longer distances its energy falls well below that of the .308 Winchester. It was not a commercial success. Remington was the only ammunition maker. Remington still catalogs a 150-grain load, but factory ammunition is scarce.

Cartridge specifications	
Bullet Diameter	**0.308" (7.82 mm)**
Max Case Length	**1.530" (38.86 mm)**
Case Trim Length	**1.520" (38.61 mm)**
Max COAL	**2.260" (57.40 mm)**
Primer Pocket	**Small Rifle**
Standard Twist	**1:10"**
Case Capacity	**44.5 gr H_2O**
Max Pressure	**55,000 psi (SAAMI)**

110 gr Bullet · 25" barrel

COAL: 2.094" • Bullet length: 0.872" • Seat depth: 0.308" • Usable capacity: 38.8 / 44.5 gr H_2O

Powder	STEP 1 · 90%		STEP 2		STEP 3		STEP 4		STEP 5 · LIMIT			
	gr	fps	gr	fps	gr	fps	gr	fps	gr	fps	psi	Fill
Hodgdon CFE BLK	35.2	2,955	36.2	3,020	37.2	3,090	38.1	3,155	39.1	3,225	55,000	104%
Shooters World SBR-SOCOM	30.6	2,920	31.5	2,985	32.3	3,045	33.1	3,100	34.0	3,170	55,000	90%
Norma R123	26.6	2,905	27.4	2,970	28.1	3,025	28.9	3,090	29.6	3,145	54,600	83%
Alliant Power Pro 1200-R	35.6	2,845	36.6	2,910	37.6	2,975	38.6	3,045	39.6	3,115	54,700	104%
Shooters World AR Plus	36.1	2,815	37.1	2,885	38.1	2,950	39.1	3,015	40.1	3,085	54,700	105%
Alliant Power Pro 300-MP	28.2	2,845	29.0	2,905	29.8	2,965	30.5	3,020	31.3	3,075	54,800	90%
Accurate 1680	32.7	2,820	33.6	2,880	34.5	2,945	35.4	3,005	36.3	3,065	55,000	96%
Alliant Reloder 7	33.2	2,795	34.1	2,855	35.0	2,915	36.0	2,985	36.9	3,045	54,600	101%
Hodgdon H4198	31.9	2,770	32.8	2,835	33.6	2,890	34.5	2,950	35.4	3,015	52,800	105%
Accurate 2015	35.2	2,735	36.2	2,805	37.2	2,870	38.1	2,930	39.1	2,995	54,600	105%
Vihtavuori N120	30.0	2,740	30.8	2,800	31.6	2,855	32.5	2,920	33.3	2,975	54,800	100%
Accurate LT-30	33.1	2,725	34.0	2,785	35.0	2,850	35.9	2,910	36.8	2,970	54,900	95%
Vihtavuori N110	24.0	2,655	24.7	2,710	25.4	2,770	26.0	2,815	26.7	2,870	54,900	81%
Hodgdon H4227	24.5	2,535	25.2	2,590	25.9	2,645	26.5	2,690	27.2	2,745	54,600	80%

150 gr Bullet · 25" barrel

COAL: 2.210" • Bullet length: 1.174" • Seat depth: 0.494" • Usable capacity: 35.7 / 44.5 gr H_2O

Powder	STEP 1 · 90%		STEP 2		STEP 3		STEP 4		STEP 5 · LIMIT			
	gr	fps	gr	fps	gr	fps	gr	fps	gr	fps	psi	Fill
Hodgdon CFE BLK	31.1	2,460	32.0	2,520	32.8	2,570	33.6	2,620	34.5	2,680	55,000	100%
Alliant Power Pro 1200-R	31.3	2,405	32.2	2,465	33.0	2,515	33.9	2,570	34.8	2,630	54,900	99%
Norma 200	30.4	2,400	31.3	2,460	32.1	2,510	32.9	2,560	33.8	2,620	54,700	103%
Hodgdon H335	34.0	2,375	35.0	2,435	35.9	2,490	36.8	2,545	37.8	2,605	53,800	105%
Shooters World AR Plus	32.0	2,380	32.9	2,435	33.8	2,490	34.7	2,550	35.6	2,605	54,800	101%
Shooters World SBR-SOCOM	26.4	2,390	27.1	2,440	27.9	2,495	28.6	2,545	29.3	2,595	54,700	85%
Accurate 2460	33.6	2,370	34.5	2,420	35.5	2,480	36.4	2,535	37.3	2,590	52,800	105%
Hodgdon H322	31.7	2,365	32.6	2,420	33.5	2,475	34.3	2,530	35.2	2,585	52,800	105%
Reload Swiss RS40	31.7	2,360	32.6	2,420	33.5	2,475	34.3	2,525	35.2	2,580	52,100	105%
Shooters World The Patriot	32.4	2,335	33.3	2,390	34.2	2,445	35.1	2,500	36.0	2,555	54,100	105%
Accurate 2015	31.3	2,320	32.2	2,375	33.0	2,425	33.9	2,485	34.8	2,540	54,900	101%
Accurate 2495	33.5	2,305	34.4	2,360	35.4	2,425	36.3	2,480	37.2	2,535	52,400	105%
Accurate 1680	28.6	2,325	29.4	2,375	30.2	2,425	31.0	2,480	31.8	2,530	54,700	92%
Accurate LT-32	30.5	2,315	31.4	2,370	32.2	2,420	33.0	2,470	33.9	2,530	54,200	105%
Alliant Reloder 7	28.9	2,325	29.7	2,375	30.5	2,425	31.3	2,480	32.1	2,530	54,600	96%
Hodgdon H4198	28.3	2,325	29.1	2,380	29.9	2,430	30.6	2,475	31.4	2,530	54,600	101%
Shooters World Tactical Rifle	32.7	2,300	33.6	2,355	34.5	2,410	35.4	2,465	36.3	2,520	52,300	105%
Ramshot X-Terminator	31.9	2,310	32.8	2,360	33.6	2,410	34.5	2,460	35.4	2,515	54,800	100%
Accurate 2230	32.0	2,300	32.9	2,355	33.8	2,405	34.6	2,455	35.5	2,510	54,900	101%
IMR 4198	27.6	2,275	28.4	2,330	29.1	2,375	29.9	2,425	30.7	2,475	54,800	104%

160 gr Bullet · 25" barrel

COAL: 2.195" • Bullet length: 1.168" • Seat depth: 0.503" • Usable capacity: 35.6 / 44.5 gr H_2O

Powder	STEP 1 · 90%		STEP 2		STEP 3		STEP 4		STEP 5 · LIMIT			
	gr	fps	gr	fps	gr	fps	gr	fps	gr	fps	psi	Fill
Hodgdon CFE BLK	30.4	2,360	31.3	2,415	32.1	2,465	32.9	2,520	33.8	2,575	54,800	98%
Hodgdon H335	33.7	2,320	34.6	2,370	35.5	2,425	36.5	2,485	37.4	2,540	54,700	104%
Alliant Power Pro 1200-R	30.6	2,320	31.5	2,375	32.3	2,425	33.1	2,475	34.0	2,530	54,600	97%
Hodgdon H322	31.6	2,310	32.5	2,365	33.4	2,425	34.2	2,475	35.1	2,530	54,900	105%
Norma 200	29.8	2,320	30.6	2,370	31.5	2,425	32.3	2,475	33.1	2,530	55,000	101%
Reload Swiss RS40	31.6	2,310	32.5	2,365	33.4	2,425	34.2	2,470	35.1	2,530	54,100	105%
Accurate 2460	33.2	2,300	34.1	2,355	35.0	2,405	36.0	2,465	36.9	2,520	54,700	104%
Shooters World AR Plus	31.5	2,300	32.4	2,355	33.3	2,410	34.1	2,460	35.0	2,515	54,800	100%
Accurate 2495	33.4	2,270	34.3	2,325	35.3	2,385	36.2	2,440	37.1	2,495	54,400	105%
Alliant Reloder 10x	29.8	2,275	30.6	2,325	31.5	2,385	32.3	2,435	33.1	2,485	53,800	105%
Vihtavuori N130	29.3	2,285	30.1	2,335	30.9	2,385	31.7	2,435	32.5	2,485	53,200	105%
Shooters World Tactical Rifle	32.6	2,260	33.5	2,310	34.4	2,365	35.3	2,420	36.2	2,475	54,300	105%
Shooters World The Patriot	32.0	2,265	32.9	2,320	33.8	2,375	34.6	2,420	35.5	2,475	54,900	104%
IMR 3031	31.4	2,255	32.3	2,310	33.1	2,360	34.0	2,415	34.9	2,470	53,100	105%
Accurate 2015	30.8	2,245	31.7	2,300	32.5	2,350	33.4	2,405	34.2	2,455	54,700	100%
Accurate 1680	28.1	2,235	28.9	2,285	29.6	2,330	30.4	2,380	31.2	2,435	54,900	90%
Hodgdon H4198	27.7	2,235	28.5	2,285	29.3	2,340	30.0	2,385	30.8	2,435	54,700	99%
Ramshot X-Terminator	31.1	2,215	32.0	2,270	32.8	2,315	33.6	2,360	34.5	2,415	54,800	98%
Accurate 2230	31.1	2,205	32.0	2,255	32.8	2,305	33.6	2,350	34.5	2,400	54,700	98%
IMR 4198	27.0	2,185	27.8	2,235	28.5	2,280	29.3	2,335	30.0	2,380	54,900	101%

.30 BR Remington

The .30 BR began as a wildcat cartridge made by necking up 6mm BR brass to accept .308-inch bullets in a single step. It belongs to the family of short small-primer benchrest cartridges. These descend from the .308x1.5-inch Barnes and the 6mm BR Remington. The .30 BR was developed in U.S. benchrest circles. There it found its niche in Varmint for Score competition. This discipline is scored on concentric-ring targets rather than by group size.

In score shooting the larger .30-caliber bullet hole can touch a scoring ring that a 6mm bullet would miss. This gives it an advantage over the 6mm PPC used in group benchrest. The .30 BR is usually loaded with flat-base match bullets of about 115 to 118 grains at roughly 2,900 to 3,000 fps. It is widely used in U.S. score benchrest and in some hunter-class benchrest competition elsewhere. C.I.P. standardized it in 2011. It relies on brass formed from 6mm BR cases. Improved versions such as the 30 BRX have also appeared.

Cartridge specifications	
Bullet Diameter	**0.308" (7.82 mm)**
Max Case Length	**1.512" (38.41 mm)**
Case Trim Length	**1.502" (38.16 mm)**
Max COAL	**2.283" (58.00 mm)**
Primer Pocket	**Small Rifle**
Standard Twist	**1:17"**
Case Capacity	**42.0 gr H_2O**
Max Pressure	**4,050 bar / 58,740 psi (C.I.P.)**

110 gr Bullet · 25" barrel

COAL: 1.999" • Bullet length: 0.795" • Seat depth: 0.308" • Usable capacity: 36.6 / 42.0 gr H_2O

Powder	STEP 1 · 90%		STEP 2		STEP 3		STEP 4		STEP 5 · LIMIT			
	gr	fps	gr	fps	gr	fps	gr	fps	gr	fps	psi	Fill
Hodgdon CFE BLK	32.9	2,940	33.8	3,005	34.8	3,075	35.7	3,140	36.6	3,210	58,400	103%
Shooters World SBR-SOCOM	28.6	2,905	29.4	2,970	30.2	3,030	31.0	3,095	31.8	3,155	58,600	89%
Norma R123	24.9	2,900	25.6	2,960	26.3	3,020	27.0	3,080	27.7	3,140	58,500	82%
Alliant Power Pro 1200-R	33.4	2,825	34.3	2,890	35.3	2,960	36.2	3,025	37.1	3,090	58,400	103%
Alliant Power Pro 300-MP	26.4	2,840	27.1	2,895	27.9	2,960	28.6	3,015	29.3	3,070	58,600	89%
Shooters World AR Plus	33.8	2,795	34.8	2,865	35.7	2,925	36.6	2,990	37.6	3,060	58,500	104%
Accurate 1680	30.5	2,805	31.4	2,870	32.2	2,925	33.0	2,985	33.9	3,050	58,300	95%
Hodgdon H4198	29.9	2,760	30.7	2,820	31.6	2,890	32.4	2,945	33.2	3,005	58,400	104%
Accurate 2015	32.9	2,710	33.8	2,775	34.8	2,845	35.7	2,910	36.6	2,975	58,600	104%
Vihtavuori N120	28.0	2,730	28.8	2,790	29.6	2,850	30.3	2,905	31.1	2,965	58,700	99%
Accurate LT-30	30.9	2,705	31.8	2,770	32.6	2,825	33.4	2,880	34.3	2,945	58,300	94%
Hodgdon H322	32.5	2,690	33.4	2,755	34.3	2,815	35.2	2,880	36.1	2,945	57,200	105%
Hodgdon H335	34.9	2,675	35.9	2,745	36.8	2,805	37.8	2,875	38.8	2,945	56,700	105%

150 gr Bullet · 25" barrel

COAL: 2.150" • Bullet length: 1.113" • Seat depth: 0.475" • Usable capacity: 33.6 / 42.0 gr H_2O

Powder	STEP 1 · 90%		STEP 2		STEP 3		STEP 4		STEP 5 · LIMIT			
	gr	fps	gr	fps	gr	fps	gr	fps	gr	fps	psi	Fill
Hodgdon CFE BLK	29.1	2,455	29.9	2,510	30.7	2,565	31.5	2,620	32.3	2,675	58,400	99%
Alliant Power Pro 1200-R	29.3	2,395	30.1	2,450	31.0	2,510	31.8	2,565	32.6	2,620	58,500	99%
Norma 200	28.5	2,390	29.3	2,445	30.1	2,500	30.9	2,555	31.7	2,610	58,500	102%
Shooters World SBR-SOCOM	24.8	2,395	25.5	2,450	26.1	2,495	26.8	2,545	27.5	2,600	58,600	84%
Accurate 2230	31.3	2,375	32.2	2,430	33.0	2,480	33.9	2,540	34.8	2,595	57,900	105%
Shooters World AR Plus	30.1	2,380	30.9	2,430	31.8	2,490	32.6	2,545	33.4	2,595	58,700	100%
Accurate 2460	31.7	2,370	32.6	2,430	33.5	2,485	34.3	2,535	35.2	2,590	56,700	105%
Reload Swiss RS40	29.9	2,365	30.7	2,420	31.6	2,480	32.4	2,530	33.2	2,585	56,900	105%
Ramshot X-Terminator	30.8	2,360	31.7	2,415	32.5	2,465	33.4	2,520	34.2	2,570	58,400	103%
Shooters World The Patriot	30.5	2,340	31.4	2,395	32.2	2,450	33.0	2,500	33.9	2,560	58,500	105%
Hodgdon H335	31.4	2,330	32.3	2,390	33.1	2,440	34.0	2,500	34.9	2,555	58,600	103%
Alliant Reloder 10x	28.2	2,325	29.0	2,385	29.8	2,440	30.5	2,485	31.3	2,540	56,900	105%
Accurate 1680	26.8	2,325	27.6	2,380	28.3	2,425	29.1	2,480	29.8	2,530	58,500	91%
Accurate 2495	31.6	2,300	32.5	2,360	33.4	2,420	34.2	2,470	35.1	2,530	57,400	105%
Alliant Reloder 7	27.1	2,320	27.9	2,375	28.6	2,425	29.4	2,480	30.1	2,530	58,600	95%
Accurate LT-32	28.6	2,305	29.4	2,360	30.2	2,415	31.0	2,470	31.8	2,520	58,500	104%
Hodgdon H322	29.0	2,305	29.8	2,360	30.6	2,415	31.4	2,470	32.2	2,520	58,400	102%
IMR 3031	29.7	2,300	30.5	2,355	31.4	2,415	32.2	2,465	33.0	2,520	55,800	105%
Accurate LT-30	27.3	2,270	28.1	2,325	28.8	2,370	29.6	2,425	30.3	2,470	58,700	91%
IMR 4198	25.5	2,250	26.2	2,300	26.9	2,350	27.6	2,395	28.3	2,445	58,600	101%

165 gr Bullet · 25" barrel

COAL: 2.225" • Bullet length: 1.200" • Seat depth: 0.487" • Usable capacity: 33.3 / 42.0 gr H_2O

Powder	STEP 1 · 90%		STEP 2		STEP 3		STEP 4		STEP 5 · LIMIT			
	gr	fps	gr	fps	gr	fps	gr	fps	gr	fps	psi	Fill
Hodgdon Leverevolution	32.9	2,310	33.8	2,365	34.8	2,430	35.7	2,485	36.6	2,540	55,800	105%
Hodgdon CFE BLK	28.2	2,310	29.0	2,365	29.8	2,415	30.5	2,465	31.3	2,520	58,500	97%
Alliant Power Pro 1200-R	28.4	2,270	29.2	2,320	29.9	2,370	30.7	2,420	31.5	2,475	58,700	96%
Reload Swiss RS40	29.3	2,260	30.1	2,310	31.0	2,370	31.8	2,420	32.6	2,475	58,600	104%
Accurate 2460	30.8	2,250	31.7	2,305	32.5	2,355	33.4	2,410	34.2	2,460	58,400	103%
Norma 200	27.5	2,260	28.3	2,315	29.0	2,360	29.8	2,415	30.5	2,460	58,500	99%
Shooters World AR Plus	29.2	2,250	30.0	2,300	30.8	2,350	31.6	2,405	32.4	2,455	58,700	99%
Accurate 2230	30.2	2,240	31.0	2,290	31.9	2,345	32.7	2,390	33.5	2,440	58,700	102%
Accurate 2495	31.0	2,215	31.9	2,275	32.7	2,325	33.5	2,375	34.4	2,435	58,700	104%
Hodgdon H335	30.5	2,215	31.4	2,270	32.2	2,320	33.0	2,370	33.9	2,430	58,600	101%
IMR 3031	29.3	2,220	30.1	2,270	31.0	2,330	31.8	2,380	32.6	2,430	58,600	105%
Shooters World The Patriot	29.5	2,205	30.3	2,255	31.1	2,305	32.0	2,365	32.8	2,415	58,500	102%
Ramshot X-Terminator	29.5	2,210	30.3	2,260	31.1	2,305	32.0	2,365	32.8	2,410	58,500	100%
Accurate 2015	28.4	2,185	29.2	2,235	30.0	2,285	30.8	2,340	31.6	2,390	58,600	98%
Hodgdon H322	28.2	2,190	29.0	2,240	29.8	2,295	30.5	2,340	31.3	2,390	58,700	100%
Accurate LT-32	27.7	2,180	28.5	2,235	29.3	2,285	30.0	2,330	30.8	2,385	58,300	102%
IMR 4320	31.2	2,165	32.1	2,220	33.0	2,280	33.8	2,330	34.7	2,385	56,800	105%
Accurate 1680	25.9	2,180	26.6	2,225	27.4	2,280	28.1	2,325	28.8	2,375	58,500	89%
Alliant Reloder 7	26.1	2,180	26.8	2,225	27.6	2,280	28.3	2,330	29.0	2,375	58,700	92%
Accurate LT-30	26.4	2,135	27.1	2,180	27.9	2,235	28.6	2,280	29.3	2,325	58,500	89%

180 gr Bullet · 25" barrel

COAL: 2.200" • Bullet length: 1.258" • Seat depth: 0.571" • Usable capacity: 31.8 / 42.0 gr H_2O

Powder	STEP 1 · 90%		STEP 2		STEP 3		STEP 4		STEP 5 · LIMIT			
	gr	fps	gr	fps	gr	fps	gr	fps	gr	fps	psi	Fill
Hodgdon Leverevolution	31.4	2,190	32.3	2,245	33.1	2,295	34.0	2,350	34.9	2,410	56,300	105%
Hodgdon CFE BLK	26.7	2,160	27.4	2,210	28.2	2,260	28.9	2,310	29.7	2,360	58,700	96%
Reload Swiss RS40	27.8	2,125	28.6	2,175	29.4	2,225	30.1	2,270	30.9	2,325	58,300	103%
Alliant Power Pro 1200-R	26.8	2,125	27.6	2,175	28.3	2,225	29.1	2,275	29.8	2,320	58,600	96%
Hodgdon H4895	29.0	2,105	29.8	2,155	30.6	2,210	31.4	2,260	32.2	2,310	55,600	105%
Norma 200	25.9	2,115	26.6	2,160	27.4	2,215	28.1	2,265	28.8	2,310	58,500	98%
Accurate 2460	29.1	2,110	29.9	2,160	30.7	2,205	31.5	2,255	32.3	2,305	58,400	102%
Shooters World AR Plus	27.6	2,105	28.4	2,155	29.1	2,200	29.9	2,250	30.7	2,305	58,400	98%
Hodgdon H335	29.0	2,090	29.8	2,140	30.6	2,190	31.4	2,240	32.2	2,290	58,500	100%
IMR 3031	27.8	2,090	28.6	2,140	29.4	2,190	30.1	2,240	30.9	2,290	58,600	104%
Shooters World Tactical Rifle	28.7	2,080	29.5	2,130	30.3	2,180	31.1	2,230	31.9	2,285	58,700	103%
Accurate 2230	28.4	2,090	29.2	2,135	29.9	2,180	30.7	2,230	31.5	2,275	58,300	100%
Shooters World The Patriot	28.0	2,070	28.8	2,125	29.6	2,175	30.3	2,215	31.1	2,270	58,700	102%
IMR 4320	29.8	2,055	30.6	2,105	31.5	2,165	32.3	2,215	33.1	2,265	57,300	105%
Ramshot X-Terminator	27.8	2,065	28.6	2,110	29.4	2,160	30.1	2,205	30.9	2,255	58,300	98%
Hodgdon H322	26.7	2,050	27.4	2,100	28.2	2,150	28.9	2,195	29.7	2,250	58,700	99%
Accurate 2015	27.0	2,055	27.8	2,105	28.5	2,150	29.3	2,200	30.0	2,245	58,500	98%
Accurate 1680	24.6	2,040	25.3	2,090	26.0	2,135	26.6	2,175	27.3	2,220	58,600	88%
Alliant Reloder 7	24.6	2,035	25.3	2,080	26.0	2,130	26.6	2,170	27.3	2,215	58,300	91%
Accurate LT-30	25.0	1,995	25.7	2,040	26.4	2,090	27.1	2,135	27.8	2,180	58,700	88%

200 gr Bullet · 25" barrel

COAL: 2.283" • Bullet length: 1.392" • Seat depth: 0.621" • Usable capacity: 31.1 / 42.0 gr H_2O

Powder	STEP 1 · 90%		STEP 2		STEP 3		STEP 4		STEP 5 · LIMIT			
	gr	fps	gr	fps	gr	fps	gr	fps	gr	fps	psi	Fill
Hodgdon Leverevolution	30.6	2,090	31.5	2,145	32.3	2,190	33.1	2,240	34.0	2,295	58,500	105%
Vihtavuori N530	27.3	2,045	28.1	2,095	28.8	2,140	29.6	2,190	30.3	2,235	57,200	105%
Hodgdon H4895	28.3	2,010	29.1	2,060	29.9	2,110	30.6	2,150	31.4	2,200	58,300	105%
Hodgdon CFE BLK	25.5	2,005	26.2	2,050	26.9	2,095	27.6	2,140	28.3	2,185	58,200	94%
Alliant AR-Comp	27.4	1,995	28.1	2,040	28.9	2,090	29.6	2,130	30.4	2,180	58,100	105%
Reload Swiss RS40	26.7	1,990	27.4	2,030	28.2	2,085	28.9	2,130	29.7	2,180	58,700	102%
Accurate 2495	28.2	1,970	29.0	2,015	29.8	2,065	30.5	2,110	31.3	2,160	58,200	101%
Alliant Power Pro 1200-R	25.5	1,975	26.2	2,020	26.9	2,065	27.6	2,110	28.3	2,155	58,400	93%
IMR 4320	28.9	1,955	29.7	2,005	30.5	2,055	31.3	2,105	32.1	2,155	58,400	104%
Hodgdon H335	27.8	1,955	28.6	2,005	29.4	2,055	30.1	2,095	30.9	2,145	58,600	98%
Shooters World Tactical Rifle	27.5	1,955	28.3	2,005	29.1	2,055	29.8	2,095	30.6	2,145	58,700	101%
Accurate 2460	27.6	1,955	28.4	2,005	29.1	2,045	29.9	2,095	30.7	2,140	58,600	99%
Hodgdon Benchmark	26.6	1,955	27.3	2,000	28.1	2,050	28.8	2,095	29.5	2,135	57,700	105%
IMR 8208 XBR	27.0	1,950	27.8	2,000	28.5	2,045	29.3	2,095	30.0	2,135	56,100	105%
Accurate 2230	26.8	1,925	27.6	1,975	28.3	2,015	29.1	2,065	29.8	2,105	58,400	97%
Accurate 2015	25.9	1,915	26.6	1,960	27.4	2,015	28.1	2,055	28.8	2,100	58,600	96%
Hodgdon H322	25.6	1,915	26.3	1,960	27.0	2,005	27.7	2,050	28.4	2,095	58,500	97%
Ramshot X-Terminator	26.4	1,910	27.1	1,955	27.9	2,005	28.6	2,045	29.3	2,090	58,500	96%
Vihtavuori N133	25.6	1,915	26.3	1,960	27.0	2,005	27.7	2,050	28.4	2,090	55,600	105%
Alliant Reloder 7	23.4	1,885	24.0	1,925	24.7	1,970	25.4	2,015	26.0	2,055	58,700	89%

30 Nosler

Nosler introduced the 30 Nosler in 2016. It followed the 26 Nosler and 28 Nosler as the third cartridge in the company's family of proprietary magnums. Like its predecessors it uses a shortened beltless case with a rebated rim, straight walls and a 35-degree shoulder. The case derives from the .404 Jeffery by way of the .300 Remington Ultra Magnum. The cartridge was designed to fit standard .30-06-length actions and to compete with established .30-caliber magnums. SAAMI has standardized it.

Nosler's factory loads include a 180-grain AccuBond at about 3,200 fps and a 210-grain AccuBond Long Range at about 3,000 fps. Published comparisons place its velocities slightly above those of the .300 Weatherby Magnum. Recoil is somewhat less in rifles of equal weight. The cartridge is used mainly for elk, moose and other large game at extended ranges. Nosler supplies ammunition and brass. The chambering is offered in Nosler rifles and by custom rifle builders.

Cartridge specifications	
Bullet Diameter	**0.308" (7.82 mm)**
Max Case Length	**2.556" (64.92 mm)**
Case Trim Length	**2.546" (64.67 mm)**
Max COAL	**3.340" (84.84 mm)**
Primer Pocket	**Large Rifle**
Standard Twist	**1:10"**
Case Capacity	**97.4 gr H_2O**
Max Pressure	**65,000 psi (SAAMI)**

150 gr Bullet · 25" barrel

COAL: 3.340" • Bullet length: 1.161" • Seat depth: 0.376" • Usable capacity: 90.7 / 97.4 gr H_2O

Powder	STEP 1 · 90%		STEP 2		STEP 3		STEP 4		STEP 5 · LIMIT			
	gr	fps	gr	fps	gr	fps	gr	fps	gr	fps	psi	Fill
Ramshot Grand	83.4	3,170	85.7	3,255	88.1	3,340	90.4	3,425	92.7	3,510	64,900	104%
Alliant Reloder 23	76.2	3,185	78.3	3,260	80.5	3,340	82.6	3,415	84.7	3,495	64,900	101%
Accurate 4350	72.5	3,175	74.5	3,250	76.5	3,320	78.6	3,395	80.6	3,470	65,000	93%
Hodgdon SUPERFORMANCE	74.4	3,170	76.5	3,245	78.6	3,320	80.6	3,395	82.7	3,470	64,900	89%
Alliant Reloder 26	78.4	3,150	80.6	3,230	82.8	3,305	84.9	3,380	87.1	3,465	64,800	96%
Vihtavuori N560	77.9	3,165	80.1	3,240	82.2	3,310	84.3	3,385	86.5	3,460	64,900	100%
Vihtavuori N565	81.5	3,125	83.8	3,205	86.0	3,285	88.3	3,365	90.6	3,450	64,700	105%
Accurate MagPro	82.1	3,115	84.4	3,195	86.7	3,280	88.9	3,360	91.2	3,445	65,000	103%
Hodgdon Retumbo	82.0	3,090	84.3	3,170	86.5	3,245	88.8	3,325	91.1	3,410	64,800	104%
Ramshot Hunter	72.7	3,120	74.7	3,190	76.8	3,265	78.8	3,340	80.8	3,410	64,900	95%
Alliant Power Pro 4000-MR	73.2	3,105	75.2	3,175	77.3	3,250	79.3	3,325	81.3	3,395	65,000	91%
Hodgdon H4831SC	75.4	3,090	77.5	3,165	79.6	3,240	81.7	3,315	83.8	3,390	64,900	93%
IMR 4350	70.4	3,110	72.4	3,180	74.3	3,250	76.3	3,320	78.2	3,390	64,800	93%
IMR 7828SSC	76.8	3,085	78.9	3,160	81.0	3,235	83.2	3,315	85.3	3,390	65,000	98%
Alliant Reloder 22	74.4	3,070	76.5	3,145	78.6	3,220	80.6	3,295	82.7	3,370	65,000	97%
Alliant Reloder 16	68.3	3,090	70.2	3,160	72.1	3,225	74.0	3,290	75.9	3,360	64,800	93%
Vihtavuori N170	80.5	3,070	82.7	3,140	85.0	3,215	87.2	3,285	89.4	3,360	64,900	102%
Alliant Reloder 25	78.6	3,040	80.8	3,120	82.9	3,195	85.1	3,270	87.3	3,350	62,000	105%
IMR 4007 SSC	68.6	3,065	70.5	3,135	72.4	3,200	74.3	3,270	76.2	3,340	64,900	90%
IMR 7977	78.5	2,985	80.7	3,060	82.8	3,135	85.0	3,215	87.2	3,295	64,900	104%

165 gr Bullet · 25" barrel

COAL: 3.325" • Bullet length: 1.298" • Seat depth: 0.528" • Usable capacity: 88.0 / 97.4 gr H_2O

Powder	STEP 1 · 90%		STEP 2		STEP 3		STEP 4		STEP 5 · LIMIT			
	gr	fps	gr	fps	gr	fps	gr	fps	gr	fps	psi	Fill
Ramshot Grand	80.5	3,055	82.7	3,130	85.0	3,210	87.2	3,290	89.4	3,370	64,800	104%
Alliant Reloder 23	73.3	3,055	75.3	3,125	77.3	3,195	79.4	3,270	81.4	3,340	64,900	100%
Alliant Reloder 26	75.4	3,025	77.5	3,100	79.6	3,175	81.7	3,250	83.8	3,325	65,000	96%
Ramshot Magnum	81.9	3,005	84.2	3,085	86.5	3,165	88.7	3,240	91.0	3,325	64,900	104%
Hodgdon SUPERFORMANCE	71.6	3,035	73.6	3,110	75.5	3,175	77.5	3,245	79.5	3,320	65,000	88%
Vihtavuori N565	78.1	3,015	80.3	3,090	82.4	3,165	84.6	3,245	86.8	3,320	64,800	104%
Accurate MagPro	79.2	3,000	81.4	3,080	83.6	3,155	85.8	3,235	88.0	3,315	64,900	102%
Vihtavuori N560	74.3	3,015	76.4	3,085	78.4	3,155	80.5	3,225	82.6	3,295	64,900	98%
Hodgdon Retumbo	79.1	2,975	81.3	3,050	83.5	3,125	85.7	3,200	87.9	3,280	65,000	104%
Norma 204	68.9	2,985	70.8	3,050	72.8	3,120	74.7	3,190	76.6	3,260	64,800	92%
Hodgdon H4831SC	72.5	2,965	74.5	3,035	76.5	3,105	78.6	3,180	80.6	3,250	65,000	92%
Alliant Power Pro 4000-MR	70.3	2,970	72.3	3,040	74.2	3,105	76.1	3,170	78.1	3,245	64,900	90%
IMR 7828SSC	73.5	2,960	75.5	3,030	77.6	3,100	79.7	3,175	81.7	3,245	64,900	97%
Alliant Reloder 25	76.1	2,940	78.2	3,015	80.3	3,090	82.5	3,165	84.6	3,240	63,000	105%
Vihtavuori N555	67.7	2,975	69.6	3,045	71.5	3,110	73.3	3,175	75.2	3,240	65,000	92%
Alliant Reloder 22	71.5	2,950	73.5	3,020	75.5	3,090	77.4	3,160	79.4	3,230	64,900	96%
IMR 4350	67.3	2,960	69.2	3,030	71.0	3,095	72.9	3,160	74.8	3,230	64,800	91%
IMR 8133	79.9	2,910	82.1	2,985	84.3	3,065	86.6	3,145	88.8	3,225	62,400	105%
Hodgdon H1000	76.6	2,920	78.7	2,995	80.8	3,065	83.0	3,145	85.1	3,220	62,100	105%
Hodgdon H4831	72.2	2,935	74.2	3,005	76.2	3,075	78.2	3,145	80.2	3,215	64,900	98%

180 gr Bullet · 25" barrel

COAL: 3.245" • Bullet length: 1.280" • Seat depth: 0.591" • Usable capacity: 86.9 / 97.4 gr H_2O

Powder	STEP 1 · 90%		STEP 2		STEP 3		STEP 4		STEP 5 · LIMIT			
	gr	fps	gr	fps	gr	fps	gr	fps	gr	fps	psi	Fill
Ramshot Grand	78.7	2,955	80.9	3,030	83.1	3,105	85.2	3,175	87.4	3,255	65,000	102%
Vihtavuori N570	79.7	2,945	81.9	3,020	84.1	3,095	86.3	3,170	88.5	3,250	65,000	105%
Ramshot Magnum	79.9	2,915	82.1	2,985	84.3	3,060	86.6	3,140	88.8	3,220	64,800	103%
Accurate MagPro	77.4	2,910	79.6	2,985	81.7	3,060	83.8	3,130	86.0	3,210	64,900	101%
Alliant Reloder 23	71.1	2,930	73.1	3,000	75.0	3,065	77.0	3,135	79.0	3,200	64,800	99%
Alliant Reloder 26	73.3	2,920	75.3	2,985	77.3	3,055	79.4	3,130	81.4	3,200	64,800	94%
Vihtavuori N565	75.2	2,905	77.3	2,975	79.4	3,045	81.5	3,115	83.6	3,190	64,900	101%
Reload Swiss RS76	78.4	2,890	80.6	2,960	82.8	3,035	84.9	3,105	87.1	3,180	64,900	101%
Reload Swiss RS62	68.9	2,905	70.8	2,970	72.8	3,040	74.7	3,110	76.6	3,175	65,000	92%
Reload Swiss RS70	70.8	2,895	72.8	2,965	74.8	3,035	76.7	3,100	78.7	3,170	64,900	91%
Accurate 4350	67.4	2,905	69.3	2,970	71.2	3,035	73.0	3,100	74.9	3,165	64,900	90%
Hodgdon Retumbo	77.1	2,875	79.3	2,950	81.4	3,020	83.5	3,090	85.7	3,165	64,900	103%
Hodgdon H1000	75.6	2,860	77.7	2,930	79.8	3,000	81.9	3,075	84.0	3,145	64,300	105%
Vihtavuori N560	71.6	2,885	73.6	2,945	75.6	3,010	77.6	3,080	79.6	3,145	64,900	96%
Hodgdon H4831SC	70.6	2,855	72.5	2,920	74.5	2,990	76.5	3,060	78.4	3,125	65,000	91%
Norma 204	67.1	2,865	68.9	2,930	70.8	2,995	72.7	3,060	74.5	3,125	64,900	90%
IMR 7828SSC	71.3	2,850	73.3	2,920	75.3	2,985	77.2	3,050	79.2	3,120	64,800	95%
Alliant Reloder 22	69.5	2,845	71.4	2,910	73.3	2,975	75.3	3,045	77.2	3,110	65,000	94%
Accurate 3100	69.8	2,830	71.7	2,895	73.7	2,965	75.6	3,030	77.5	3,100	64,900	97%
IMR 7977	73.8	2,785	75.8	2,850	77.9	2,925	80.0	2,995	82.0	3,065	65,000	102%

200 gr Bullet · 25" barrel

COAL: 3.340" • Bullet length: 1.444" • Seat depth: 0.659" • Usable capacity: 85.7 / 97.4 gr H_2O

Powder	STEP 1 · 90%		STEP 2		STEP 3		STEP 4		STEP 5 · LIMIT			
	gr	fps	gr	fps	gr	fps	gr	fps	gr	fps	psi	Fill
Ramshot Grand	76.3	2,815	78.4	2,885	80.5	2,955	82.7	3,030	84.8	3,100	65,000	101%
Vihtavuori N570	76.4	2,815	78.5	2,885	80.7	2,955	82.8	3,025	84.9	3,100	64,800	102%
Ramshot Magnum	77.5	2,795	79.7	2,865	81.8	2,935	83.9	3,005	86.1	3,080	65,000	101%
Accurate MagPro	75.1	2,785	77.2	2,855	79.3	2,925	81.3	2,995	83.4	3,065	64,900	99%
Winchester StaBALL HD	77.1	2,755	79.3	2,825	81.4	2,895	83.5	2,965	85.7	3,035	65,000	102%
Alliant Reloder 26	70.5	2,770	72.5	2,835	74.4	2,900	76.3	2,960	78.3	3,030	64,800	92%
IMR 8133	76.8	2,745	78.9	2,815	81.0	2,885	83.2	2,955	85.3	3,030	64,800	104%
Alliant Reloder 23	68.3	2,765	70.2	2,830	72.1	2,895	74.0	2,955	75.9	3,020	64,900	96%
Reload Swiss RS76	75.9	2,750	78.0	2,815	80.1	2,885	82.2	2,950	84.3	3,020	65,000	99%
Alliant Reloder 25	72.7	2,745	74.7	2,810	76.8	2,880	78.8	2,945	80.8	3,015	65,000	103%
Hodgdon Retumbo	74.5	2,740	76.6	2,805	78.7	2,875	80.7	2,940	82.8	3,010	64,900	100%
Vihtavuori N565	71.4	2,750	73.4	2,815	75.3	2,880	77.3	2,945	79.3	3,010	65,000	97%
Hodgdon H1000	73.3	2,735	75.3	2,800	77.3	2,865	79.4	2,935	81.4	3,005	64,800	103%
Hodgdon Hybrid 100V	64.0	2,750	65.8	2,810	67.5	2,870	69.3	2,935	71.1	3,000	64,900	93%
Norma MRP	68.3	2,710	70.2	2,775	72.1	2,835	74.0	2,900	75.9	2,965	64,900	92%
Hodgdon H4831SC	68.0	2,705	69.9	2,770	71.8	2,830	73.6	2,890	75.5	2,955	64,900	89%
IMR 7828SSC	68.4	2,700	70.3	2,765	72.2	2,825	74.1	2,890	76.0	2,950	64,800	92%
Vihtavuori N560	68.1	2,705	70.0	2,765	71.9	2,825	73.8	2,885	75.7	2,945	64,800	92%
Alliant Reloder 22	66.8	2,695	68.7	2,755	70.5	2,815	72.3	2,875	74.2	2,940	64,900	92%
IMR 7977	71.4	2,655	73.4	2,720	75.3	2,785	77.3	2,850	79.3	2,920	64,900	100%

210 gr Bullet · 25" barrel

COAL: 3.340" • Bullet length: 1.478" • Seat depth: 0.694" • Usable capacity: 84.9 / 97.4 gr H_2O

Powder	STEP 1 · 90%		STEP 2		STEP 3		STEP 4		STEP 5 · LIMIT			
	gr	fps	gr	fps	gr	fps	gr	fps	gr	fps	psi	Fill
Ramshot Grand	75.2	2,755	77.3	2,825	79.3	2,890	81.4	2,960	83.5	3,030	64,900	100%
Vihtavuori N570	75.0	2,760	77.1	2,825	79.2	2,895	81.2	2,960	83.3	3,030	64,900	101%
Ramshot Magnum	76.2	2,735	78.3	2,805	80.5	2,875	82.6	2,945	84.7	3,015	64,800	100%
Accurate MagPro	74.0	2,730	76.0	2,795	78.1	2,865	80.2	2,935	82.2	3,005	65,000	99%
IMR 8133	75.7	2,695	77.8	2,760	79.9	2,830	82.0	2,900	84.1	2,970	65,000	103%
Winchester StaBALL HD	75.9	2,700	78.0	2,765	80.1	2,830	82.2	2,900	84.3	2,970	64,900	101%
Alliant Reloder 26	69.2	2,705	71.1	2,765	73.1	2,830	75.0	2,895	76.9	2,960	64,900	91%
Vihtavuori N568	75.6	2,675	77.7	2,745	79.8	2,820	81.9	2,890	84.0	2,960	64,900	102%
Alliant Reloder 25	71.6	2,690	73.6	2,755	75.5	2,815	77.5	2,880	79.5	2,950	64,900	102%
Reload Swiss RS76	74.6	2,685	76.7	2,750	78.8	2,815	80.8	2,880	82.9	2,950	64,900	98%
Alliant Reloder 19	66.5	2,695	68.3	2,755	70.2	2,820	72.1	2,880	73.9	2,945	64,900	92%
Alliant Reloder 23	67.1	2,700	68.9	2,760	70.8	2,820	72.7	2,885	74.5	2,945	65,000	95%
Hodgdon Retumbo	73.4	2,685	75.4	2,745	77.5	2,815	79.5	2,880	81.5	2,945	65,000	100%
Hodgdon H1000	72.1	2,675	74.1	2,740	76.1	2,805	78.1	2,870	80.1	2,940	64,900	102%
Hodgdon H4831SC	66.8	2,640	68.7	2,705	70.5	2,760	72.3	2,820	74.2	2,885	65,000	88%
Norma MRP	67.0	2,645	68.8	2,705	70.7	2,765	72.6	2,825	74.4	2,885	64,800	91%
IMR 7828SSC	67.1	2,635	68.9	2,695	70.8	2,755	72.7	2,820	74.5	2,880	64,800	91%
Alliant Reloder 22	65.5	2,630	67.3	2,685	69.2	2,750	71.0	2,810	72.8	2,870	64,900	91%
Vihtavuori N560	66.7	2,635	68.5	2,690	70.4	2,750	72.3	2,810	74.1	2,870	65,000	91%
IMR 7977	70.2	2,600	72.2	2,665	74.1	2,725	76.0	2,790	78.0	2,855	64,800	100%

220 gr Bullet · 25" barrel

COAL: 3.240" • Bullet length: 1.512" • Seat depth: 0.828" • Usable capacity: 82.6 / 97.4 gr H_2O

Powder	STEP 1 · 90%		STEP 2		STEP 3		STEP 4		STEP 5 · LIMIT			
	gr	fps	gr	fps	gr	fps	gr	fps	gr	fps	psi	Fill
Vihtavuori N570	72.8	2,690	74.8	2,755	76.8	2,820	78.9	2,890	80.9	2,955	64,900	101%
Ramshot Grand	73.1	2,685	75.1	2,750	77.2	2,820	79.2	2,885	81.2	2,950	64,800	100%
Ramshot Magnum	74.2	2,670	76.3	2,740	78.3	2,805	80.4	2,875	82.4	2,940	64,900	100%
Accurate MagPro	71.9	2,660	73.9	2,725	75.9	2,790	77.9	2,860	79.9	2,925	64,800	99%
IMR 8133	73.6	2,625	75.6	2,690	77.7	2,760	79.8	2,830	81.8	2,895	65,000	103%
Vihtavuori N568	73.5	2,620	75.5	2,685	77.6	2,755	79.7	2,825	81.7	2,895	64,800	102%
Winchester StaBALL HD	73.8	2,630	75.8	2,690	77.9	2,760	80.0	2,825	82.0	2,890	64,900	101%
Alliant Reloder 26	67.1	2,630	69.0	2,690	70.8	2,750	72.7	2,815	74.6	2,875	64,800	91%
Alliant Reloder 25	69.6	2,620	71.5	2,680	73.4	2,740	75.4	2,810	77.3	2,870	64,900	102%
Reload Swiss RS76	72.5	2,615	74.5	2,675	76.5	2,740	78.6	2,805	80.6	2,870	64,900	98%
Hodgdon Retumbo	71.3	2,610	73.3	2,675	75.3	2,740	77.2	2,800	79.2	2,865	64,800	100%
Hodgdon H1000	70.0	2,605	72.0	2,670	73.9	2,730	75.8	2,795	77.8	2,860	64,800	102%
Vihtavuori N565	67.5	2,610	69.4	2,670	71.3	2,735	73.1	2,790	75.0	2,850	64,800	95%
Winchester Supreme 780	67.1	2,600	68.9	2,655	70.8	2,720	72.7	2,780	74.5	2,840	64,900	91%
Norma MRP	65.0	2,570	66.8	2,630	68.6	2,685	70.4	2,745	72.2	2,805	64,800	91%
Hodgdon H4831SC	64.8	2,565	66.6	2,625	68.4	2,685	70.2	2,740	72.0	2,800	64,900	88%
IMR 7828SSC	65.1	2,565	66.9	2,625	68.7	2,680	70.5	2,740	72.3	2,800	64,900	91%
Alliant Reloder 22	63.6	2,555	65.4	2,615	67.2	2,675	68.9	2,730	70.7	2,790	65,000	91%
Vihtavuori N560	64.6	2,560	66.4	2,615	68.2	2,670	70.0	2,725	71.8	2,785	65,000	91%
IMR 7977	68.3	2,535	70.2	2,595	72.1	2,655	74.0	2,720	75.9	2,780	65,000	100%

230 gr Bullet · 25" barrel

COAL: 3.340" • Bullet length: 1.686" • Seat depth: 0.902" • Usable capacity: 81.8 / 97.4 gr H_2O

Powder	STEP 1 · 90%		STEP 2		STEP 3		STEP 4		STEP 5 · LIMIT			
	gr	fps	gr	fps	gr	fps	gr	fps	gr	fps	psi	Fill
Vihtavuori N570	71.3	2,635	73.3	2,700	75.3	2,760	77.2	2,825	79.2	2,890	64,900	100%
Ramshot Grand	71.9	2,625	73.9	2,690	75.9	2,755	77.9	2,820	79.9	2,885	64,900	100%
Ramshot Magnum	72.9	2,615	74.9	2,680	77.0	2,750	79.0	2,815	81.0	2,880	64,800	99%
Accurate MagPro	70.8	2,605	72.8	2,670	74.8	2,740	76.7	2,800	78.7	2,870	65,000	98%
Vihtavuori N568	72.4	2,580	74.4	2,645	76.4	2,710	78.4	2,780	80.4	2,845	64,900	102%
IMR 8133	72.4	2,570	74.4	2,635	76.4	2,700	78.4	2,765	80.4	2,830	64,800	102%
Winchester StaBALL HD	72.5	2,570	74.5	2,630	76.5	2,695	78.6	2,760	80.6	2,825	64,900	100%
Alliant Reloder 25	68.3	2,560	70.2	2,620	72.1	2,680	74.0	2,740	75.9	2,805	64,800	101%
Alliant Reloder 26	65.8	2,565	67.6	2,625	69.4	2,685	71.3	2,745	73.1	2,805	64,800	90%
Hodgdon Retumbo	70.0	2,550	72.0	2,615	73.9	2,675	75.8	2,735	77.8	2,800	64,800	99%
Reload Swiss RS76	71.3	2,555	73.3	2,615	75.3	2,680	77.2	2,740	79.2	2,800	64,900	98%
Hodgdon H1000	68.8	2,550	70.7	2,610	72.6	2,670	74.5	2,730	76.4	2,795	64,800	101%
Vihtavuori N565	65.9	2,550	67.7	2,605	69.6	2,665	71.4	2,720	73.2	2,780	64,900	94%
Norma MRP	63.7	2,505	65.5	2,565	67.3	2,620	69.0	2,675	70.8	2,735	64,900	90%
Hodgdon H4831SC	63.5	2,500	65.3	2,560	67.0	2,615	68.8	2,675	70.6	2,730	64,800	87%
Hodgdon H50BMG	75.8	2,475	77.9	2,535	80.0	2,600	82.1	2,665	84.2	2,730	61,900	105%
IMR 7828SSC	63.7	2,500	65.5	2,560	67.3	2,615	69.0	2,670	70.8	2,730	64,800	90%
Accurate 3100	62.6	2,490	64.3	2,545	66.1	2,605	67.8	2,660	69.6	2,720	64,900	92%
Alliant Reloder 22	62.4	2,495	64.1	2,550	65.8	2,605	67.6	2,665	69.3	2,720	65,000	90%
Vihtavuori 24N41	72.2	2,470	74.2	2,530	76.2	2,595	78.2	2,655	80.2	2,720	64,900	100%

.30 TC

Hornady developed the .30 Thompson/Center for Thompson/Center Arms. The two companies introduced it in 2007 with the T/C Icon bolt-action rifle. The cartridge uses a new case of the same length as the .308 Winchester case. It was designed to deliver .30-06 Springfield performance from a short action. SAAMI standardizes it as the 30 Thompson Center. The C.I.P. standard calls it the 30 TC.

Hornady factory loads drive a 150-grain bullet at about 3,000 fps and a 165-grain bullet at about 2,850 fps. The cartridge performed as intended. Yet consumer acceptance was low. It never achieved commercial success against the established .308 Winchester. Its most significant legacy is the 6.5 Creedmoor. Hornady created that cartridge by necking down the .30 TC case. The 6.5 Creedmoor has since become widely used for hunting and long-range target shooting.

Cartridge specifications	
Bullet Diameter	**0.308" (7.82 mm)**
Max Case Length	**1.920" (48.77 mm)**
Case Trim Length	**1.910" (48.52 mm)**
Max COAL	**2.660" (67.56 mm)**
Primer Pocket	**Large Rifle**
Standard Twist	**1:10"**
Case Capacity	**54.3 gr H_2O**
Max Pressure	**62,000 psi (SAAMI)**

110 gr Bullet · 25" barrel

COAL: 2.365" • Bullet length: 0.753" • Seat depth: 0.308" • Usable capacity: 48.7 / 54.3 gr H_2O

Powder	STEP 1 · 90%		STEP 2		STEP 3		STEP 4		STEP 5 · LIMIT			
	gr	fps	gr	fps	gr	fps	gr	fps	gr	fps	psi	Fill
Hodgdon CFE BLK	41.4	3,215	42.5	3,285	43.7	3,355	44.9	3,430	46.0	3,500	61,800	97%
Hodgdon Leverevolution	48.2	3,170	49.5	3,245	50.9	3,325	52.2	3,400	53.5	3,480	59,200	105%
Reload Swiss RS40	43.1	3,130	44.3	3,200	45.5	3,275	46.7	3,345	47.9	3,420	61,800	104%
Accurate 2460	45.7	3,125	47.0	3,200	48.3	3,275	49.5	3,340	50.8	3,415	61,700	104%
Alliant Power Pro 1200-R	41.9	3,135	43.1	3,205	44.3	3,275	45.4	3,345	46.6	3,415	61,900	97%
Norma 200	41.1	3,135	42.3	3,210	43.4	3,275	44.6	3,350	45.7	3,415	62,000	102%
Accurate 2230	44.9	3,125	46.1	3,190	47.4	3,265	48.6	3,335	49.9	3,410	61,800	104%
Shooters World SBR-SOCOM	35.6	3,145	36.6	3,215	37.6	3,280	38.6	3,345	39.6	3,410	61,800	84%
Hodgdon H335	45.6	3,110	46.9	3,185	48.2	3,260	49.4	3,330	50.7	3,405	61,900	103%
Ramshot X-Terminator	44.6	3,120	45.9	3,195	47.1	3,265	48.4	3,335	49.6	3,405	61,700	103%
Shooters World AR Plus	42.8	3,120	44.0	3,190	45.1	3,255	46.3	3,325	47.5	3,400	62,000	99%
Shooters World The Patriot	43.7	3,070	44.9	3,140	46.2	3,215	47.4	3,285	48.6	3,355	61,800	104%
Vihtavuori N130	40.1	3,090	41.2	3,155	42.3	3,225	43.4	3,290	44.5	3,355	58,900	105%
Alliant Reloder 10x	40.8	3,075	41.9	3,140	43.0	3,210	44.2	3,280	45.3	3,350	60,700	105%
IMR 3031	43.1	3,040	44.3	3,110	45.5	3,180	46.7	3,250	47.9	3,325	60,500	105%
Accurate LT-32	41.1	3,040	42.3	3,110	43.4	3,175	44.6	3,250	45.7	3,315	61,800	103%
Shooters World Tactical Rifle	44.5	3,030	45.7	3,100	47.0	3,175	48.2	3,245	49.4	3,315	61,900	104%
Accurate 2015	41.4	3,010	42.5	3,075	43.7	3,150	44.9	3,220	46.0	3,285	61,800	98%
Hodgdon H322	41.2	3,010	42.4	3,080	43.5	3,145	44.6	3,210	45.8	3,285	61,800	100%
IMR 4320	45.7	2,970	47.0	3,045	48.3	3,125	49.5	3,195	50.8	3,270	59,700	105%

125 gr Bullet · 25" barrel

COAL: 2.570" • Bullet length: 1.074" • Seat depth: 0.424" • Usable capacity: 47.0 / 54.3 gr H_2O

Powder	STEP 1 · 90%		STEP 2		STEP 3		STEP 4		STEP 5 · LIMIT			
	gr	fps	gr	fps	gr	fps	gr	fps	gr	fps	psi	Fill
Hodgdon Leverevolution	46.4	3,015	47.7	3,090	49.0	3,165	50.3	3,240	51.6	3,315	61,300	105%
Hodgdon CFE BLK	39.2	2,985	40.3	3,050	41.4	3,115	42.5	3,185	43.6	3,250	61,700	96%
Reload Swiss RS40	41.0	2,935	42.1	3,000	43.3	3,070	44.5	3,140	45.6	3,205	61,900	103%
Hodgdon H335	43.5	2,925	44.7	2,995	45.9	3,065	47.1	3,130	48.3	3,200	61,900	102%
Accurate 2460	43.2	2,920	44.4	2,985	45.6	3,055	46.8	3,120	48.0	3,190	61,800	102%
Alliant Power Pro 1200-R	39.7	2,930	40.8	2,995	41.9	3,060	43.0	3,125	44.1	3,190	61,900	96%
Norma 200	38.8	2,930	39.9	3,000	41.0	3,065	42.0	3,125	43.1	3,190	61,900	100%
Shooters World AR Plus	40.6	2,910	41.7	2,975	42.9	3,045	44.0	3,110	45.1	3,175	61,700	97%
Ramshot X-Terminator	42.1	2,910	43.3	2,975	44.5	3,040	45.6	3,100	46.8	3,170	61,900	101%
Accurate 2230	42.3	2,905	43.5	2,970	44.6	3,030	45.8	3,100	47.0	3,165	61,800	101%
Alliant Reloder 10x	39.1	2,905	40.2	2,970	41.3	3,035	42.3	3,095	43.4	3,165	62,000	104%
Hodgdon H4895	42.8	2,890	44.0	2,960	45.2	3,025	46.4	3,095	47.6	3,165	58,800	105%
Accurate 2495	43.5	2,870	44.7	2,940	45.9	3,010	47.1	3,080	48.3	3,150	61,800	104%
IMR 3031	41.3	2,880	42.4	2,945	43.6	3,010	44.8	3,080	45.9	3,145	62,000	104%
Shooters World The Patriot	41.5	2,875	42.6	2,935	43.8	3,000	45.0	3,070	46.1	3,130	61,900	102%
IMR 4320	44.0	2,840	45.2	2,905	46.5	2,980	47.7	3,050	48.9	3,120	61,100	105%
Accurate LT-32	39.1	2,850	40.2	2,915	41.3	2,980	42.3	3,035	43.4	3,100	61,700	102%
Alliant Reloder 7	36.9	2,845	37.9	2,905	39.0	2,970	40.0	3,030	41.0	3,090	61,700	93%
Accurate 2015	39.4	2,820	40.5	2,885	41.6	2,950	42.7	3,010	43.8	3,075	61,800	97%
Hodgdon H322	39.2	2,825	40.3	2,885	41.4	2,950	42.4	3,010	43.5	3,075	61,800	98%

150 gr Bullet · 25" barrel

COAL: 2.645" • Bullet length: 1.197" • Seat depth: 0.472" • Usable capacity: 45.9 / 54.3 gr H_2O

Powder	STEP 1 · 90%		STEP 2		STEP 3		STEP 4		STEP 5 · LIMIT			
	gr	fps	gr	fps	gr	fps	gr	fps	gr	fps	psi	Fill
Hodgdon Leverevolution	44.1	2,775	45.3	2,840	46.5	2,905	47.8	2,975	49.0	3,040	61,700	102%
Vihtavuori N530	39.5	2,715	40.6	2,775	41.7	2,835	42.8	2,895	43.9	2,960	62,000	103%
Hodgdon H4895	41.1	2,680	42.3	2,745	43.4	2,805	44.6	2,870	45.7	2,930	61,900	103%
IMR 4895	41.9	2,675	43.1	2,740	44.3	2,805	45.4	2,865	46.6	2,930	60,300	105%
Accurate 2520	42.1	2,680	43.3	2,740	44.5	2,805	45.6	2,865	46.8	2,925	60,000	105%
Shooters World Match Rifle	42.1	2,660	43.3	2,725	44.5	2,790	45.6	2,855	46.8	2,920	60,900	105%
Hodgdon H335	41.0	2,660	42.1	2,720	43.3	2,785	44.5	2,850	45.6	2,910	61,700	98%
Ramshot TAC	40.7	2,660	41.8	2,715	43.0	2,780	44.1	2,840	45.2	2,900	61,200	105%
Reload Swiss RS40	38.7	2,660	39.8	2,725	40.9	2,785	41.9	2,840	43.0	2,900	61,700	100%
Hodgdon Varget	41.7	2,645	42.9	2,710	44.0	2,770	45.1	2,830	46.3	2,895	59,300	105%
Vihtavuori N140	42.1	2,645	43.3	2,705	44.5	2,770	45.6	2,830	46.8	2,895	61,700	104%
Hodgdon Benchmark	39.3	2,645	40.4	2,705	41.5	2,765	42.6	2,825	43.7	2,885	60,700	105%
IMR 4320	42.0	2,630	43.2	2,695	44.4	2,760	45.5	2,820	46.7	2,885	61,800	102%
Alliant Power Pro Varmint	41.0	2,630	42.1	2,690	43.3	2,755	44.5	2,820	45.6	2,880	60,800	105%
Alliant Reloder 10x	36.8	2,635	37.8	2,690	38.8	2,750	39.9	2,810	40.9	2,870	61,700	101%
Accurate 2460	40.2	2,625	41.3	2,680	42.5	2,745	43.6	2,800	44.7	2,860	61,900	98%
Ramshot X-Terminator	39.1	2,605	40.2	2,660	41.3	2,720	42.3	2,770	43.4	2,830	61,800	96%
Accurate 2230	39.2	2,595	40.3	2,655	41.4	2,710	42.4	2,765	43.5	2,825	61,800	96%
Shooters World The Patriot	38.8	2,580	39.9	2,640	41.0	2,700	42.0	2,755	43.1	2,815	61,700	98%
Accurate LT-32	36.9	2,580	37.9	2,640	39.0	2,700	40.0	2,755	41.0	2,810	61,900	98%

165 gr Bullet · 25" barrel

COAL: 2.630" • Bullet length: 1.279" • Seat depth: 0.569" • Usable capacity: 44.0 / 54.3 gr H_2O

Powder	STEP 1 · 90%		STEP 2		STEP 3		STEP 4		STEP 5 · LIMIT			
	gr	fps	gr	fps	gr	fps	gr	fps	gr	fps	psi	Fill
Hodgdon Leverevolution	42.1	2,630	43.3	2,690	44.5	2,755	45.6	2,815	46.8	2,880	62,000	101%
IMR 4895	40.2	2,545	41.3	2,605	42.5	2,670	43.6	2,725	44.7	2,785	62,000	105%
Accurate 2520	40.4	2,540	41.5	2,600	42.6	2,655	43.8	2,720	44.9	2,775	61,500	105%
Shooters World Match Rifle	40.4	2,530	41.5	2,590	42.6	2,650	43.8	2,715	44.9	2,775	61,900	105%
Vihtavuori N530	37.3	2,555	38.3	2,605	39.3	2,660	40.4	2,720	41.4	2,775	61,700	101%
Hodgdon H4895	39.1	2,530	40.2	2,590	41.3	2,645	42.3	2,700	43.4	2,760	61,800	102%
Hodgdon Varget	40.0	2,520	41.1	2,580	42.2	2,635	43.3	2,695	44.4	2,755	60,500	105%
Hodgdon H335	39.2	2,515	40.3	2,575	41.4	2,630	42.4	2,685	43.5	2,745	61,900	98%
Ramshot TAC	38.9	2,510	40.0	2,570	41.0	2,625	42.1	2,685	43.2	2,745	61,600	104%
IMR 4320	40.1	2,490	41.2	2,550	42.4	2,615	43.5	2,675	44.6	2,735	61,900	102%
Vihtavuori N140	40.1	2,500	41.2	2,560	42.3	2,615	43.4	2,675	44.5	2,735	61,800	103%
Alliant Power Pro Varmint	39.3	2,495	40.4	2,555	41.5	2,615	42.6	2,670	43.7	2,730	61,900	105%
Reload Swiss RS40	36.8	2,505	37.8	2,560	38.8	2,610	39.9	2,675	40.9	2,730	61,600	99%
Hodgdon Benchmark	37.5	2,500	38.5	2,555	39.6	2,615	40.7	2,670	41.7	2,725	61,900	104%
IMR 8208 XBR	37.9	2,485	39.0	2,545	40.0	2,595	41.0	2,650	42.1	2,710	61,700	104%
Accurate 2200	35.4	2,475	36.4	2,530	37.3	2,580	38.3	2,635	39.3	2,690	61,700	101%
Accurate 2460	38.1	2,460	39.1	2,515	40.2	2,570	41.3	2,630	42.3	2,680	61,900	96%
Ramshot X-Terminator	36.9	2,435	37.9	2,485	39.0	2,540	40.0	2,595	41.0	2,645	61,700	94%
Accurate 2230	37.0	2,425	38.0	2,480	39.0	2,530	40.1	2,585	41.1	2,640	61,800	94%
Hodgdon H322	35.1	2,400	36.1	2,455	37.0	2,505	38.0	2,560	39.0	2,615	62,000	94%

180 gr Bullet · 25" barrel

COAL: 2.645" • Bullet length: 1.322" • Seat depth: 0.597" • Usable capacity: 43.6 / 54.3 gr H_2O

Powder	STEP 1 · 90%		STEP 2		STEP 3		STEP 4		STEP 5 · LIMIT			
	gr	fps	gr	fps	gr	fps	gr	fps	gr	fps	psi	Fill
Hodgdon Leverevolution	41.0	2,515	42.1	2,570	43.3	2,635	44.4	2,690	45.5	2,750	61,900	100%
Hodgdon BL-C(2)	41.0	2,450	42.1	2,510	43.3	2,570	44.5	2,635	45.6	2,690	59,400	105%
Hodgdon Varget	39.2	2,425	40.3	2,485	41.4	2,540	42.4	2,595	43.5	2,655	62,000	104%
IMR 4895	38.9	2,425	40.0	2,480	41.0	2,535	42.1	2,590	43.2	2,650	61,800	102%
Shooters World Match Rifle	39.3	2,420	40.4	2,480	41.5	2,535	42.6	2,595	43.7	2,650	61,900	103%
Accurate 2520	39.2	2,420	40.3	2,475	41.4	2,530	42.5	2,585	43.6	2,645	62,000	103%
Norma 201	37.1	2,410	38.1	2,465	39.2	2,525	40.2	2,580	41.2	2,635	58,700	105%
Hodgdon H4895	37.8	2,405	38.8	2,455	39.9	2,510	41.0	2,570	42.0	2,625	61,600	100%
IMR 4320	39.2	2,395	40.3	2,450	41.4	2,510	42.4	2,560	43.5	2,620	61,900	100%
Shooters World The Creed	39.4	2,390	40.5	2,450	41.6	2,505	42.7	2,565	43.8	2,620	61,800	104%
Ramshot TAC	37.8	2,390	38.8	2,445	39.9	2,500	41.0	2,560	42.0	2,615	61,600	103%
Accurate 2495	38.2	2,390	39.3	2,445	40.3	2,500	41.4	2,555	42.4	2,610	61,800	98%
Hodgdon H335	38.0	2,390	39.0	2,440	40.1	2,500	41.2	2,555	42.2	2,610	61,800	96%
IMR 4064	38.4	2,380	39.5	2,440	40.5	2,490	41.6	2,545	42.7	2,605	60,800	105%
Vihtavuori N135	37.4	2,390	38.4	2,440	39.5	2,495	40.5	2,545	41.5	2,600	61,900	103%
Vihtavuori N140	38.8	2,380	39.9	2,435	41.0	2,495	42.0	2,545	43.1	2,600	62,000	101%
Hodgdon Benchmark	36.2	2,370	37.2	2,425	38.2	2,475	39.2	2,530	40.2	2,580	61,700	102%
IMR 8208 XBR	36.6	2,360	37.6	2,410	38.7	2,470	39.7	2,520	40.7	2,570	61,800	101%
Accurate 2460	36.7	2,325	37.7	2,375	38.8	2,430	39.8	2,485	40.8	2,535	61,900	94%
Accurate 2230	35.6	2,290	36.6	2,340	37.5	2,385	38.5	2,435	39.5	2,485	61,700	92%

.30-06 Springfield

The United States adopted the .30-06 Springfield in 1906. It replaced the .30-03 Springfield and was developed from that earlier round. Compared with the .30-03 the new case had a slightly shorter neck. It was loaded with a 150-grain flat-base spitzer bullet at about 2,700 fps in place of the earlier round-nose bullet. The M1903 Springfield rifle was chambered for it. Later arms included the M1917 Enfield, the M1 Garand, the Browning Automatic Rifle and the M1919 machine gun.

The .30-06 served in World War I, World War II, the Korean War and the Vietnam War. It was officially replaced by the 7.62x51mm NATO in 1957. Even so it remained in some military use into the late 1970s. As a sporting cartridge it is loaded with bullets from 110 to 220 grains. Hunters use it widely for North American big game. It is also the parent of many cartridges. Among them are the .270 Winchester, .25-06 Remington, .280 Remington and .35 Whelen.

Cartridge specifications	
Bullet Diameter	**0.308" (7.82 mm)**
Max Case Length	**2.494" (63.35 mm)**
Case Trim Length	**2.484" (63.09 mm)**
Max COAL	**3.340" (84.84 mm)**
Primer Pocket	**Large Rifle**
Standard Twist	**1:10"**
Case Capacity	**68.1 gr H_2O**
Max Pressure	**60,000 psi (SAAMI)**

110 gr Bullet · 25" barrel

COAL: 3.000" • Bullet length: 0.827" • Seat depth: 0.321" • Usable capacity: 62.5 / 68.1 gr H_2O

Powder	STEP 1 · 90%		STEP 2		STEP 3		STEP 4		STEP 5 · LIMIT			
	gr	fps	gr	fps	gr	fps	gr	fps	gr	fps	psi	Fill
Accurate 2520	56.3	3,430	57.9	3,510	59.5	3,590	61.0	3,665	62.6	3,745	60,000	103%
Hodgdon Leverevolution	55.5	3,360	57.0	3,435	58.6	3,520	60.2	3,600	61.7	3,675	60,000	94%
Accurate 2460	53.7	3,345	55.2	3,420	56.7	3,495	58.2	3,570	59.7	3,645	59,900	96%
Accurate 2495	54.5	3,320	56.0	3,395	57.5	3,475	59.1	3,555	60.6	3,635	59,900	98%
Vihtavuori N540	55.4	3,325	56.9	3,400	58.5	3,480	60.0	3,550	61.5	3,625	59,800	105%
IMR 4895	54.1	3,295	55.6	3,370	57.1	3,445	58.6	3,525	60.1	3,600	59,900	99%
Alliant Reloder 15	55.3	3,275	56.8	3,350	58.3	3,425	59.9	3,505	61.4	3,580	58,900	105%
Reload Swiss RS52	55.0	3,270	56.5	3,345	58.0	3,420	59.6	3,505	61.1	3,580	60,000	103%
IMR 4064	54.3	3,255	55.8	3,330	57.3	3,405	58.8	3,480	60.3	3,555	59,800	103%
Ramshot TAC	51.4	3,250	52.8	3,320	54.3	3,395	55.7	3,465	57.1	3,535	59,900	97%
Ramshot Big Game	57.8	3,205	59.4	3,285	61.0	3,360	62.6	3,440	64.2	3,520	59,800	105%
Hodgdon H4895	51.3	3,225	52.7	3,295	54.1	3,365	55.6	3,440	57.0	3,510	59,800	94%
Alliant Power Pro Varmint	52.0	3,215	53.5	3,290	54.9	3,360	56.3	3,430	57.8	3,505	59,800	98%
IMR 3031	49.9	3,220	51.3	3,295	52.6	3,360	54.0	3,435	55.4	3,505	59,800	95%
Hodgdon Varget	52.6	3,185	54.0	3,255	55.5	3,330	57.0	3,410	58.4	3,480	59,900	97%
IMR 4320	52.7	3,175	54.2	3,250	55.6	3,325	57.0	3,395	58.5	3,475	59,900	94%
Vihtavuori N133	48.1	3,200	49.4	3,265	50.8	3,335	52.1	3,400	53.4	3,465	60,000	98%
Accurate 2700	57.2	3,140	58.8	3,215	60.4	3,295	62.0	3,375	63.6	3,455	60,000	104%
Shooters World Precision Rifle	52.6	3,145	54.0	3,215	55.5	3,290	57.0	3,370	58.4	3,440	60,000	104%
Hodgdon H414	57.9	3,120	59.5	3,200	61.1	3,275	62.7	3,355	64.3	3,435	59,300	105%

125 gr Bullet · 25" barrel

COAL: 3.150" • Bullet length: 1.058" • Seat depth: 0.402" • Usable capacity: 60.9 / 68.1 gr H_2O

Powder	STEP 1 · 90%		STEP 2		STEP 3		STEP 4		STEP 5 · LIMIT			
	gr	fps	gr	fps	gr	fps	gr	fps	gr	fps	psi	Fill
Hodgdon Leverevolution	53.1	3,165	54.6	3,240	56.0	3,310	57.5	3,385	59.0	3,455	59,700	93%
Accurate 2495	52.3	3,140	53.8	3,215	55.2	3,285	56.6	3,355	58.1	3,430	59,900	96%
Accurate 2460	51.0	3,125	52.4	3,190	53.9	3,260	55.3	3,330	56.7	3,395	59,900	93%
Vihtavuori N540	52.5	3,110	54.0	3,185	55.4	3,250	56.8	3,315	58.3	3,390	59,900	102%
Reload Swiss RS52	52.7	3,090	54.2	3,165	55.7	3,240	57.1	3,310	58.6	3,385	59,800	101%
Alliant Reloder 15	52.8	3,095	54.3	3,170	55.8	3,240	57.2	3,310	58.7	3,380	59,800	103%
IMR 4895	51.5	3,100	52.9	3,170	54.4	3,240	55.8	3,310	57.2	3,380	59,800	97%
Hodgdon CFE 223	53.8	3,085	55.3	3,160	56.8	3,230	58.3	3,305	59.8	3,375	59,900	100%
IMR 4064	51.7	3,075	53.1	3,140	54.5	3,210	56.0	3,280	57.4	3,350	59,900	101%
Ramshot Big Game	55.5	3,045	57.0	3,115	58.6	3,190	60.2	3,265	61.7	3,340	59,900	103%
Accurate 4064	51.8	3,040	53.3	3,110	54.7	3,180	56.1	3,250	57.6	3,325	59,300	105%
Ramshot TAC	49.2	3,050	50.6	3,120	52.0	3,190	53.3	3,250	54.7	3,320	59,900	96%
Winchester StaBALL 6.5	57.0	3,020	58.6	3,095	60.1	3,170	61.7	3,245	63.3	3,320	58,500	105%
Vihtavuori N530	46.6	3,055	47.9	3,120	49.2	3,185	50.5	3,250	51.8	3,315	59,800	91%
Hodgdon H4895	49.0	3,035	50.4	3,100	51.7	3,165	53.0	3,230	54.4	3,300	59,900	93%
IMR 4166	49.2	3,025	50.6	3,095	52.0	3,165	53.3	3,230	54.7	3,300	59,900	100%
IMR 3031	47.6	3,025	48.9	3,090	50.3	3,160	51.6	3,225	52.9	3,290	59,900	93%
Hodgdon Varget	50.2	3,010	51.6	3,080	53.0	3,145	54.4	3,215	55.8	3,285	59,700	95%
Vihtavuori N150	51.2	2,995	52.6	3,060	54.0	3,130	55.5	3,200	56.9	3,270	59,000	105%
Winchester 760	55.6	2,960	57.1	3,030	58.7	3,110	60.3	3,185	61.8	3,255	60,000	104%

150 gr Bullet · 25" barrel

COAL: 3.000" • Bullet length: 1.201" • Seat depth: 0.695" • Usable capacity: 56.6 / 68.1 gr H_2O

Powder	STEP 1 · 90%		STEP 2		STEP 3		STEP 4		STEP 5 · LIMIT			
	gr	fps	gr	fps	gr	fps	gr	fps	gr	fps	psi	Fill
Accurate 2520	49.0	2,885	50.4	2,950	51.7	3,015	53.0	3,075	54.4	3,140	59,800	99%
Hodgdon Leverevolution	48.7	2,870	50.1	2,935	51.4	3,000	52.8	3,065	54.1	3,130	59,800	91%
Accurate 2495	48.0	2,850	49.3	2,915	50.6	2,975	52.0	3,045	53.3	3,110	60,000	95%
Reload Swiss RS52	48.5	2,815	49.9	2,885	51.2	2,945	52.5	3,010	53.9	3,080	59,800	100%
Alliant Power Pro 2000-MR	50.4	2,795	51.8	2,865	53.2	2,930	54.6	2,995	56.0	3,065	59,800	104%
Vihtavuori N550	50.9	2,810	52.3	2,870	53.7	2,935	55.1	3,000	56.5	3,065	59,200	105%
Winchester StaBALL 6.5	53.0	2,790	54.5	2,860	56.0	2,930	57.4	2,995	58.9	3,065	60,000	105%
Alliant Reloder 15	48.0	2,800	49.3	2,860	50.6	2,925	52.0	2,990	53.3	3,050	59,800	101%
IMR 4895	46.8	2,795	48.1	2,855	49.4	2,920	50.7	2,980	52.0	3,045	59,800	95%
Ramshot Big Game	51.1	2,780	52.5	2,845	54.0	2,915	55.4	2,980	56.8	3,045	60,000	102%
Hodgdon H4350	53.0	2,755	54.5	2,825	56.0	2,900	57.4	2,965	58.9	3,040	58,200	105%
Vihtavuori N540	47.5	2,790	48.8	2,850	50.1	2,910	51.5	2,975	52.8	3,035	59,800	99%
Hodgdon H380	50.3	2,760	51.7	2,825	53.1	2,890	54.5	2,955	55.9	3,020	59,500	105%
IMR 4064	46.9	2,775	48.2	2,835	49.5	2,900	50.8	2,960	52.1	3,020	59,800	98%
Alliant Reloder 17	51.4	2,735	52.8	2,800	54.3	2,875	55.7	2,940	57.1	3,010	60,000	101%
Hodgdon BL-C(2)	47.7	2,755	49.0	2,815	50.4	2,880	51.7	2,945	53.0	3,010	59,800	94%
Hodgdon SUPERFORMANCE	54.6	2,705	56.1	2,775	57.7	2,850	59.2	2,920	60.7	2,990	58,000	105%
Hodgdon Varget	45.9	2,730	47.2	2,795	48.5	2,860	49.7	2,915	51.0	2,980	59,800	94%
Hodgdon H4895	44.6	2,730	45.8	2,790	47.0	2,845	48.3	2,910	49.5	2,965	59,800	91%
Vihtavuori N140	46.0	2,715	47.3	2,775	48.5	2,830	49.8	2,895	51.1	2,955	59,800	92%

165 gr Bullet · 25" barrel

COAL: 3.209" • Bullet length: 1.281" • Seat depth: 0.565" • Usable capacity: 57.9 / 68.1 gr H_2O

Powder	STEP 1 · 90%		STEP 2		STEP 3		STEP 4		STEP 5 · LIMIT			
	gr	fps	gr	fps	gr	fps	gr	fps	gr	fps	psi	Fill
Hodgdon Leverevolution	48.1	2,745	49.4	2,805	50.8	2,870	52.1	2,930	53.4	2,990	60,000	88%
Accurate 2495	47.4	2,725	48.7	2,785	50.0	2,845	51.4	2,910	52.7	2,975	59,800	92%
Hodgdon H4350	52.9	2,700	54.4	2,765	55.8	2,830	57.3	2,900	58.8	2,970	59,800	102%
Accurate 2520	47.7	2,720	49.0	2,780	50.4	2,845	51.7	2,900	53.0	2,960	59,800	94%
Hodgdon SUPERFORMANCE	55.1	2,680	56.6	2,745	58.2	2,815	59.7	2,885	61.2	2,955	60,000	103%
Reload Swiss RS52	48.1	2,710	49.4	2,770	50.8	2,835	52.1	2,895	53.4	2,955	59,700	97%
Winchester StaBALL 6.5	52.6	2,695	54.0	2,755	55.5	2,820	57.0	2,890	58.4	2,950	59,900	102%
Alliant Reloder 17	51.2	2,660	52.6	2,725	54.0	2,790	55.5	2,860	56.9	2,930	59,800	99%
Hodgdon CFE 223	48.8	2,685	50.1	2,740	51.5	2,805	52.9	2,865	54.2	2,925	59,900	95%
Ramshot Big Game	50.6	2,680	52.0	2,740	53.4	2,800	54.8	2,865	56.2	2,925	59,900	99%
Hodgdon H414	51.1	2,655	52.5	2,720	54.0	2,785	55.4	2,850	56.8	2,915	59,800	100%
Vihtavuori N550	49.6	2,675	51.0	2,735	52.4	2,795	53.7	2,850	55.1	2,910	59,800	100%
Hodgdon H380	49.9	2,660	51.3	2,725	52.6	2,780	54.0	2,845	55.4	2,905	59,900	102%
Accurate 2700	50.4	2,645	51.8	2,705	53.2	2,770	54.6	2,830	56.0	2,895	59,900	98%
Alliant Power Pro 4000-MR	53.5	2,620	55.0	2,685	56.5	2,755	57.9	2,815	59.4	2,885	59,800	104%
IMR 4064	46.1	2,650	47.4	2,710	48.7	2,770	49.9	2,825	51.2	2,885	59,800	95%
Winchester 760	50.9	2,635	52.3	2,695	53.7	2,760	55.1	2,820	56.5	2,885	59,800	100%
Reload Swiss RS50	47.9	2,635	49.2	2,695	50.5	2,750	51.9	2,815	53.2	2,875	59,800	96%
Hodgdon Varget	45.3	2,620	46.5	2,675	47.8	2,735	49.0	2,790	50.3	2,850	59,900	90%
IMR 4451	50.4	2,575	51.8	2,640	53.2	2,700	54.6	2,765	56.0	2,830	59,800	101%

180 gr Bullet · 25" barrel

COAL: 3.210" • Bullet length: 1.329" • Seat depth: 0.613" • Usable capacity: 57.1 / 68.1 gr H_2O

Powder	STEP 1 · 90%		STEP 2		STEP 3		STEP 4		STEP 5 · LIMIT			
	gr	fps	gr	fps	gr	fps	gr	fps	gr	fps	psi	Fill
Hodgdon H4350	51.2	2,595	52.6	2,655	54.0	2,720	55.5	2,785	56.9	2,845	59,900	100%
Hodgdon SUPERFORMANCE	53.6	2,585	55.1	2,650	56.5	2,710	58.0	2,775	59.5	2,845	59,800	102%
Hodgdon Leverevolution	46.4	2,605	47.7	2,665	49.0	2,720	50.2	2,775	51.5	2,835	59,800	86%
Accurate 2495	45.9	2,595	47.2	2,655	48.5	2,715	49.7	2,770	51.0	2,830	59,800	90%
Winchester StaBALL 6.5	51.0	2,580	52.4	2,640	53.9	2,700	55.3	2,765	56.7	2,825	60,000	100%
Alliant Reloder 17	49.9	2,565	51.3	2,630	52.6	2,690	54.0	2,755	55.4	2,820	59,900	97%
Reload Swiss RS52	46.6	2,585	47.9	2,640	49.2	2,700	50.5	2,760	51.8	2,820	59,800	95%
Hodgdon H414	49.7	2,550	51.1	2,615	52.5	2,675	53.8	2,730	55.2	2,795	59,900	98%
Ramshot Big Game	49.0	2,555	50.4	2,620	51.7	2,675	53.0	2,730	54.4	2,790	59,800	97%
IMR 4007 SSC	49.9	2,540	51.3	2,605	52.6	2,660	54.0	2,725	55.4	2,785	59,800	104%
IMR 4350	50.2	2,540	51.6	2,600	53.0	2,660	54.4	2,725	55.8	2,785	58,000	105%
Accurate 2700	49.0	2,535	50.4	2,595	51.7	2,655	53.0	2,710	54.4	2,770	59,900	97%
Winchester 760	49.4	2,525	50.8	2,585	52.1	2,645	53.5	2,705	54.9	2,770	60,000	99%
Winchester StaBALL Match	46.0	2,535	47.3	2,590	48.5	2,645	49.8	2,705	51.1	2,760	59,900	100%
IMR 4064	44.5	2,525	45.7	2,575	47.0	2,635	48.2	2,690	49.4	2,740	59,900	93%
Hodgdon H4831SC	53.0	2,470	54.5	2,535	56.0	2,600	57.4	2,660	58.9	2,725	60,000	104%
IMR 4451	49.0	2,480	50.4	2,540	51.7	2,600	53.0	2,655	54.4	2,720	59,700	99%
Reload Swiss RS60	48.2	2,480	49.5	2,535	50.9	2,600	52.2	2,655	53.5	2,715	59,900	96%
Vihtavuori N540	44.5	2,500	45.7	2,550	47.0	2,610	48.2	2,660	49.4	2,715	60,000	92%
Norma 203B	43.6	2,495	44.8	2,550	46.0	2,600	47.2	2,655	48.4	2,710	59,900	92%

190 gr Bullet · 25" barrel

COAL: 3.210" • Bullet length: 1.370" • Seat depth: 0.654" • Usable capacity: 56.5 / 68.1 gr H_2O

Powder	STEP 1 · 90%		STEP 2		STEP 3		STEP 4		STEP 5 · LIMIT			
	gr	fps	gr	fps	gr	fps	gr	fps	gr	fps	psi	Fill
Accurate 4350	51.0	2,535	52.4	2,595	53.9	2,660	55.3	2,720	56.7	2,785	57,400	105%
Hodgdon SUPERFORMANCE	52.7	2,530	54.2	2,595	55.6	2,655	57.0	2,715	58.5	2,780	60,000	101%
Hodgdon H4350	50.1	2,530	51.5	2,590	52.9	2,650	54.3	2,715	55.7	2,775	60,000	99%
Alliant Reloder 17	49.0	2,510	50.4	2,570	51.7	2,630	53.0	2,685	54.4	2,750	59,800	97%
Hodgdon Leverevolution	45.4	2,525	46.6	2,580	47.9	2,640	49.1	2,690	50.4	2,750	59,900	85%
IMR 4955	52.5	2,495	54.0	2,560	55.4	2,620	56.8	2,685	58.3	2,750	59,900	104%
Winchester StaBALL 6.5	50.0	2,510	51.4	2,570	52.8	2,630	54.2	2,685	55.6	2,750	60,000	99%
IMR 4350	49.7	2,500	51.1	2,560	52.5	2,620	53.8	2,675	55.2	2,740	59,600	105%
Alliant Power Pro 2000-MR	47.4	2,500	48.7	2,560	50.0	2,615	51.4	2,675	52.7	2,735	59,900	98%
Hodgdon H414	48.7	2,485	50.1	2,545	51.4	2,605	52.8	2,665	54.1	2,720	59,800	98%
Ramshot Big Game	48.0	2,485	49.3	2,545	50.6	2,600	52.0	2,660	53.3	2,715	59,800	96%
Alliant Reloder 16	48.1	2,485	49.4	2,540	50.8	2,595	52.1	2,650	53.4	2,710	57,300	105%
Hodgdon CFE 223	46.1	2,475	47.4	2,530	48.7	2,585	49.9	2,640	51.2	2,695	59,800	92%
Winchester 760	48.4	2,460	49.8	2,520	51.1	2,575	52.4	2,635	53.8	2,695	59,800	98%
Reload Swiss RS62	50.2	2,430	51.6	2,490	53.0	2,550	54.4	2,615	55.8	2,675	59,800	103%
Winchester StaBALL Match	45.0	2,460	46.3	2,515	47.5	2,565	48.8	2,625	50.0	2,675	59,800	99%
Vihtavuori N550	46.3	2,455	47.6	2,510	48.8	2,560	50.1	2,610	51.4	2,665	59,900	96%
IMR 4064	43.4	2,445	44.6	2,500	45.8	2,550	47.0	2,605	48.2	2,655	59,800	91%
IMR 4451	48.1	2,420	49.4	2,480	50.8	2,540	52.1	2,595	53.4	2,655	59,800	98%
Vihtavuori N150	43.0	2,390	44.2	2,440	45.4	2,495	46.6	2,545	47.8	2,595	59,800	95%

200 gr Bullet · 25" barrel

COAL: 3.230" • Bullet length: 1.488" • Seat depth: 0.752" • Usable capacity: 54.8 / 68.1 gr H_2O

Powder	STEP 1 · 90%		STEP 2		STEP 3		STEP 4		STEP 5 · LIMIT			
	gr	fps	gr	fps	gr	fps	gr	fps	gr	fps	psi	Fill
Accurate 4350	49.5	2,455	50.9	2,515	52.3	2,580	53.6	2,635	55.0	2,695	57,700	105%
Hodgdon SUPERFORMANCE	51.0	2,450	52.4	2,510	53.9	2,570	55.3	2,635	56.7	2,695	59,900	101%
Hodgdon H4350	48.4	2,445	49.8	2,505	51.1	2,560	52.4	2,620	53.8	2,680	59,900	99%
IMR 4955	50.9	2,420	52.3	2,480	53.7	2,540	55.1	2,600	56.5	2,665	59,900	104%
Alliant Reloder 17	47.4	2,425	48.7	2,480	50.0	2,540	51.4	2,600	52.7	2,660	59,800	96%
IMR 4350	48.2	2,420	49.5	2,480	50.9	2,540	52.2	2,595	53.5	2,650	60,000	105%
Winchester StaBALL 6.5	48.4	2,425	49.8	2,480	51.1	2,535	52.4	2,590	53.8	2,650	59,900	99%
Reload Swiss RS52	44.2	2,420	45.4	2,475	46.7	2,530	47.9	2,585	49.1	2,640	59,700	94%
Hodgdon H414	47.2	2,405	48.5	2,460	49.8	2,515	51.1	2,575	52.4	2,630	59,900	97%
IMR 4007 SSC	47.4	2,400	48.7	2,455	50.0	2,510	51.4	2,575	52.7	2,630	59,900	103%
Alliant Power Pro 4000-MR	49.5	2,385	50.9	2,445	52.3	2,505	53.6	2,560	55.0	2,620	59,700	102%
Alliant Reloder 16	46.6	2,400	47.9	2,455	49.2	2,510	50.5	2,565	51.8	2,620	58,100	105%
Winchester 760	46.9	2,380	48.2	2,435	49.5	2,490	50.8	2,545	52.1	2,605	59,900	98%
Reload Swiss RS70	50.0	2,355	51.4	2,415	52.8	2,475	54.2	2,535	55.6	2,595	60,000	102%
Hodgdon H4831SC	50.4	2,345	51.8	2,400	53.2	2,460	54.6	2,520	56.0	2,580	59,800	103%
Winchester 748	43.4	2,370	44.6	2,420	45.8	2,475	47.0	2,525	48.2	2,580	59,700	90%
Alliant Reloder 15	42.5	2,360	43.7	2,410	44.9	2,465	46.0	2,510	47.2	2,565	59,800	92%
IMR 4451	46.5	2,340	47.8	2,395	49.1	2,450	50.4	2,505	51.7	2,565	59,800	98%
Vihtavuori N550	44.6	2,360	45.8	2,410	47.0	2,460	48.3	2,515	49.5	2,565	59,900	95%
Reload Swiss RS50	43.9	2,340	45.1	2,395	46.3	2,445	47.6	2,500	48.8	2,555	59,800	94%

210 gr Bullet · 25" barrel

COAL: 3.330" • Bullet length: 1.474" • Seat depth: 0.638" • Usable capacity: 56.6 / 68.1 gr H_2O

Powder	STEP 1 · 90%		STEP 2		STEP 3		STEP 4		STEP 5 · LIMIT			
	gr	fps	gr	fps	gr	fps	gr	fps	gr	fps	psi	Fill
Accurate 4350	50.6	2,455	52.0	2,510	53.4	2,570	54.8	2,630	56.2	2,690	59,900	104%
Norma URP	48.8	2,430	50.1	2,485	51.5	2,545	52.9	2,605	54.2	2,665	59,100	105%
Hodgdon SUPERFORMANCE	51.5	2,425	52.9	2,480	54.4	2,545	55.8	2,600	57.2	2,660	60,000	99%
IMR 4955	51.4	2,395	52.8	2,455	54.3	2,520	55.7	2,575	57.1	2,635	59,800	101%
Alliant Reloder 17	48.0	2,400	49.3	2,455	50.6	2,510	52.0	2,570	53.3	2,630	60,000	94%
Hodgdon H4350	48.5	2,400	49.9	2,460	51.2	2,515	52.5	2,570	53.9	2,630	59,700	96%
Vihtavuori N555	49.4	2,405	50.8	2,465	52.1	2,515	53.5	2,575	54.9	2,630	59,700	104%
IMR 4831	49.9	2,370	51.3	2,430	52.6	2,485	54.0	2,545	55.4	2,605	57,400	105%
Hodgdon Hybrid 100V	47.7	2,370	49.0	2,425	50.4	2,485	51.7	2,545	53.0	2,600	58,800	105%
Alliant Power Pro 4000-MR	50.0	2,360	51.4	2,415	52.8	2,475	54.2	2,530	55.6	2,590	59,900	100%
Hodgdon H414	47.4	2,360	48.7	2,415	50.0	2,470	51.4	2,530	52.7	2,585	59,900	95%
Winchester Supreme 780	53.2	2,345	54.7	2,405	56.2	2,465	57.6	2,520	59.1	2,585	57,000	105%
Alliant Power Pro 2000-MR	46.0	2,365	47.3	2,420	48.5	2,470	49.8	2,525	51.1	2,580	59,800	95%
Norma MRP	51.5	2,350	52.9	2,405	54.4	2,465	55.8	2,525	57.2	2,580	56,900	105%
Ramshot Big Game	46.5	2,350	47.8	2,400	49.1	2,455	50.4	2,510	51.7	2,565	59,800	93%
Reload Swiss RS62	49.1	2,335	50.5	2,395	51.9	2,450	53.2	2,505	54.6	2,565	59,800	100%
Norma 204	48.2	2,335	49.6	2,390	50.9	2,445	52.3	2,505	53.6	2,560	60,000	99%
Winchester 760	47.2	2,340	48.5	2,395	49.8	2,450	51.1	2,505	52.4	2,560	59,800	95%
Reload Swiss RS60	46.2	2,315	47.5	2,370	48.8	2,425	50.0	2,480	51.3	2,535	60,000	93%
IMR 4451	47.0	2,310	48.3	2,365	49.6	2,420	50.9	2,475	52.2	2,530	59,900	96%

220 gr Bullet · 25" barrel

COAL: 3.200" • Bullet length: 1.560" • Seat depth: 0.854" • Usable capacity: 53.1 / 68.1 gr H_2O

Powder	STEP 1 · 90%		STEP 2		STEP 3		STEP 4		STEP 5 · LIMIT			
	gr	fps	gr	fps	gr	fps	gr	fps	gr	fps	psi	Fill
Accurate 4350	48.0	2,355	49.3	2,410	50.6	2,465	52.0	2,525	53.3	2,585	59,700	105%
Hodgdon SUPERFORMANCE	48.9	2,330	50.3	2,390	51.6	2,440	52.9	2,500	54.3	2,555	59,900	100%
Norma URP	45.7	2,310	47.0	2,370	48.3	2,425	49.5	2,480	50.8	2,535	57,300	105%
Hodgdon H4350	46.1	2,310	47.4	2,365	48.7	2,425	49.9	2,475	51.2	2,530	59,900	97%
IMR 4955	48.7	2,300	50.1	2,360	51.4	2,415	52.8	2,475	54.1	2,530	59,700	103%
Alliant Reloder 17	45.5	2,305	46.8	2,360	48.0	2,410	49.3	2,470	50.5	2,525	59,800	95%
Vihtavuori N555	46.7	2,305	48.0	2,360	49.3	2,415	50.6	2,470	51.9	2,525	58,700	105%
Winchester StaBALL 6.5	46.3	2,290	47.6	2,340	48.8	2,390	50.1	2,445	51.4	2,500	59,900	98%
Alliant Power Pro 4000-MR	47.4	2,265	48.7	2,320	50.0	2,375	51.4	2,430	52.7	2,490	59,800	101%
Alliant Reloder 16	44.8	2,280	46.0	2,330	47.3	2,385	48.5	2,435	49.8	2,490	60,000	104%
IMR 4007 SSC	45.4	2,275	46.6	2,325	47.9	2,380	49.1	2,435	50.4	2,490	59,800	102%
Hodgdon H414	45.0	2,270	46.3	2,325	47.5	2,375	48.8	2,430	50.0	2,480	59,800	96%
Hodgdon Hybrid 100V	44.6	2,245	45.9	2,305	47.1	2,355	48.4	2,415	49.6	2,470	56,900	105%
Ramshot Big Game	44.3	2,260	45.5	2,310	46.8	2,365	48.0	2,415	49.2	2,465	59,900	94%
Reload Swiss RS62	46.6	2,245	47.9	2,300	49.2	2,355	50.5	2,410	51.8	2,465	59,800	101%
Reload Swiss RS70	47.9	2,245	49.2	2,295	50.5	2,350	51.9	2,410	53.2	2,465	59,800	101%
Hodgdon H4831SC	48.3	2,230	49.6	2,285	51.0	2,345	52.4	2,400	53.7	2,455	59,900	102%
Winchester 760	44.7	2,245	46.0	2,300	47.2	2,350	48.5	2,405	49.7	2,455	59,700	96%
IMR 4451	44.6	2,220	45.8	2,270	47.0	2,320	48.3	2,380	49.5	2,430	59,900	97%
Shooters World SW4350	46.2	2,210	47.5	2,265	48.8	2,320	50.0	2,370	51.3	2,425	59,100	105%

.30-06 Springfield Ackley Improved

The .30-06 Springfield Ackley Improved began as one of the many "improved" wildcats developed by P.O. Ackley during the 1940s and 1950s. Ackley was a gunsmith and writer. Like other Ackley Improved cartridges it reduces the body taper of the parent case. It also uses a sharp 40-degree shoulder to increase powder capacity. The headspace is unchanged. Standard .30-06 factory ammunition can therefore be fired safely in an Ackley Improved chamber. Firing it there also fireforms the brass to the new shape.

Gains over the standard .30-06 are modest. They are commonly on the order of 100 fps with bullets such as the 180-grain. The cartridge is used for deer, elk and other big game. Handloaders like it because brass is easily formed from inexpensive .30-06 cases. The steeper shoulder also reduces case stretching. C.I.P. standardized it in 2014 as the 30-06 Ackley Improved. It has no SAAMI standard or regular factory ammunition. Rifles are built primarily by custom gunsmiths. Load data has appeared in reloading manuals since about 1960.

Cartridge specifications	
Bullet Diameter	**0.308" (7.82 mm)**
Max Case Length	**2.494" (63.35 mm)**
Case Trim Length	**2.484" (63.09 mm)**
Max COAL	**3.340" (84.84 mm)**
Primer Pocket	**Large Rifle**
Standard Twist	**1:10"**
Case Capacity	**70.8 gr H_2O**
Max Pressure	**4,300 bar / 62,366 psi (C.I.P.)**

110 gr Bullet · 25" barrel

COAL: 2.851" • Bullet length: 0.665" • Seat depth: 0.308" • Usable capacity: 65.5 / 70.8 gr H_2O

Powder	STEP 1 · 90%		STEP 2		STEP 3		STEP 4		STEP 5 · LIMIT			
	gr	fps	gr	fps	gr	fps	gr	fps	gr	fps	psi	Fill
Hodgdon Leverevolution	57.4	3,450	59.0	3,530	60.6	3,610	62.2	3,690	63.8	3,770	62,100	93%
Vihtavuori N540	57.3	3,415	58.9	3,490	60.5	3,570	62.1	3,645	63.7	3,725	62,300	103%
Alliant Reloder 15	57.4	3,375	59.0	3,450	60.6	3,530	62.2	3,610	63.8	3,690	62,200	104%
Hodgdon CFE 223	58.4	3,370	60.0	3,450	61.7	3,530	63.3	3,610	64.9	3,690	62,300	101%
Reload Swiss RS52	57.0	3,365	58.6	3,445	60.1	3,520	61.7	3,600	63.3	3,685	62,100	102%
Accurate 2520	55.4	3,380	57.0	3,460	58.5	3,530	60.0	3,605	61.6	3,680	62,200	97%
Hodgdon BL-C(2)	57.3	3,355	58.9	3,435	60.5	3,515	62.1	3,595	63.7	3,675	62,100	98%
IMR 4895	55.5	3,360	57.0	3,435	58.6	3,515	60.2	3,595	61.7	3,670	62,400	97%
Alliant Power Pro 2000-MR	58.9	3,310	60.5	3,390	62.2	3,475	63.8	3,550	65.4	3,630	61,300	105%
Hodgdon Varget	55.4	3,320	56.9	3,395	58.5	3,475	60.0	3,550	61.5	3,630	62,400	98%
Ramshot TAC	53.3	3,340	54.8	3,415	56.3	3,485	57.7	3,555	59.2	3,630	62,300	96%
Alliant AR-Comp	51.9	3,340	53.4	3,415	54.8	3,485	56.3	3,555	57.7	3,625	62,200	94%
IMR 4064	55.7	3,325	57.3	3,400	58.8	3,475	60.4	3,550	61.9	3,625	62,300	101%
Reload Swiss RS50	56.9	3,310	58.5	3,390	60.0	3,460	61.6	3,540	63.2	3,615	62,200	101%
Accurate 2495	54.2	3,300	55.7	3,375	57.2	3,450	58.7	3,525	60.2	3,600	62,200	92%
Accurate 2700	60.0	3,270	61.7	3,350	63.4	3,435	65.0	3,515	66.7	3,595	62,200	104%
Accurate 4064	55.8	3,285	57.3	3,360	58.9	3,440	60.5	3,520	62.0	3,595	60,900	105%
Winchester StaBALL Match	55.2	3,290	56.7	3,360	58.3	3,440	59.8	3,515	61.3	3,590	59,800	105%
Vihtavuori N133	49.7	3,275	51.1	3,345	52.5	3,415	53.8	3,480	55.2	3,550	62,300	97%
Winchester 760	60.1	3,210	61.8	3,290	63.5	3,370	65.1	3,450	66.8	3,535	60,700	105%

125 gr Bullet · 25" barrel

COAL: 3.150" • Bullet length: 1.100" • Seat depth: 0.444" • Usable capacity: 63.1 / 70.8 gr H_2O

Powder	STEP 1 · 90%		STEP 2		STEP 3		STEP 4		STEP 5 · LIMIT			
	gr	fps	gr	fps	gr	fps	gr	fps	gr	fps	psi	Fill
Hodgdon Leverevolution	54.6	3,245	56.1	3,315	57.7	3,395	59.2	3,465	60.7	3,540	62,200	92%
Reload Swiss RS52	54.4	3,180	55.9	3,255	57.4	3,325	58.9	3,400	60.4	3,475	62,400	101%
Hodgdon CFE 223	55.5	3,170	57.0	3,240	58.6	3,320	60.2	3,395	61.7	3,470	62,200	100%
Vihtavuori N540	54.0	3,190	55.5	3,260	57.0	3,330	58.5	3,400	60.0	3,470	62,300	101%
Hodgdon BL-C(2)	54.7	3,170	56.2	3,240	57.8	3,320	59.3	3,395	60.8	3,465	62,200	97%
Ramshot Big Game	57.9	3,160	59.5	3,235	61.1	3,310	62.7	3,390	64.3	3,465	62,300	104%
Alliant Reloder 15	54.3	3,175	55.8	3,245	57.3	3,315	58.8	3,390	60.3	3,460	62,300	102%
IMR 4895	52.4	3,150	53.9	3,220	55.3	3,290	56.8	3,360	58.2	3,430	62,100	95%
Shooters World Match Rifle	52.5	3,135	54.0	3,210	55.4	3,275	56.8	3,345	58.3	3,420	62,200	95%
Alliant TS 15.5	53.0	3,120	54.5	3,195	56.0	3,270	57.4	3,335	58.9	3,410	62,200	101%
Hodgdon Varget	52.5	3,125	54.0	3,200	55.4	3,270	56.8	3,335	58.3	3,410	62,100	96%
Accurate 4064	53.4	3,120	54.9	3,190	56.3	3,260	57.8	3,335	59.3	3,405	62,300	104%
Hodgdon H4895	50.9	3,130	52.3	3,200	53.7	3,265	55.1	3,335	56.5	3,405	62,200	93%
IMR 4064	52.6	3,120	54.0	3,190	55.5	3,260	57.0	3,330	58.4	3,400	62,100	99%
Reload Swiss RS50	54.2	3,115	55.7	3,185	57.2	3,255	58.7	3,325	60.2	3,400	62,200	100%
Winchester StaBALL Match	53.1	3,115	54.6	3,190	56.0	3,255	57.5	3,330	59.0	3,400	61,500	105%
Ramshot TAC	50.6	3,125	52.0	3,190	53.4	3,260	54.8	3,325	56.2	3,395	62,200	95%
Accurate 2495	51.5	3,105	52.9	3,170	54.4	3,245	55.8	3,315	57.2	3,385	62,100	91%
Norma 202	51.2	3,115	52.6	3,180	54.0	3,250	55.5	3,320	56.9	3,385	62,300	98%
Winchester 760	57.9	3,075	59.5	3,150	61.1	3,225	62.7	3,300	64.3	3,380	62,200	105%

150 gr Bullet · 25" barrel

COAL: 3.000" • Bullet length: 1.118" • Seat depth: 0.612" • Usable capacity: 60.7 / 70.8 gr H_2O

Powder	STEP 1 · 90%		STEP 2		STEP 3		STEP 4		STEP 5 · LIMIT			
	gr	fps	gr	fps	gr	fps	gr	fps	gr	fps	psi	Fill
Winchester StaBALL 6.5	56.8	2,945	58.4	3,015	60.0	3,090	61.5	3,155	63.1	3,230	62,200	105%
Hodgdon Leverevolution	51.0	2,955	52.4	3,025	53.9	3,095	55.3	3,160	56.7	3,225	62,100	89%
Vihtavuori N550	54.3	2,945	55.8	3,010	57.3	3,080	58.8	3,145	60.3	3,215	62,200	104%
Ramshot Big Game	54.4	2,915	55.9	2,980	57.4	3,050	58.9	3,120	60.4	3,185	62,200	101%
Reload Swiss RS52	51.0	2,920	52.4	2,985	53.9	3,055	55.3	3,120	56.7	3,185	62,200	98%
Hodgdon BL-C(2)	51.5	2,915	52.9	2,980	54.4	3,050	55.8	3,115	57.2	3,180	62,200	95%
Hodgdon H4350	56.2	2,890	57.8	2,965	59.3	3,030	60.9	3,105	62.4	3,175	62,400	104%
Hodgdon CFE 223	52.0	2,905	53.5	2,970	54.9	3,035	56.3	3,100	57.8	3,170	62,200	97%
Hodgdon H380	53.4	2,885	54.9	2,950	56.3	3,015	57.8	3,085	59.3	3,155	62,300	104%
Accurate 2700	54.0	2,870	55.5	2,935	57.0	3,005	58.5	3,075	60.0	3,145	62,100	101%
Alliant Reloder 15	50.2	2,890	51.6	2,950	53.0	3,015	54.4	3,080	55.8	3,145	62,200	98%
Vihtavuori N150	50.4	2,875	51.8	2,940	53.2	3,000	54.6	3,065	56.0	3,130	62,200	103%
Winchester 760	54.5	2,855	56.0	2,920	57.5	2,990	59.1	3,065	60.6	3,130	62,300	103%
Hodgdon Varget	49.0	2,865	50.4	2,930	51.7	2,990	53.0	3,050	54.4	3,115	62,100	93%
IMR 4895	48.5	2,860	49.9	2,925	51.2	2,985	52.5	3,045	53.9	3,110	62,200	92%
Vihtavuori N140	49.4	2,860	50.8	2,920	52.1	2,980	53.5	3,045	54.9	3,110	62,200	92%
IMR 4064	48.8	2,850	50.1	2,910	51.5	2,975	52.9	3,035	54.2	3,100	62,300	96%
Ramshot TAC	47.3	2,840	48.6	2,900	50.0	2,965	51.3	3,025	52.6	3,085	62,300	92%
IMR 4007 SSC	53.6	2,795	55.1	2,865	56.5	2,930	58.0	3,000	59.5	3,070	61,200	105%
Alliant Power Pro Varmint	47.7	2,815	49.0	2,875	50.4	2,940	51.7	3,000	53.0	3,060	62,300	92%

165 gr Bullet · 25" barrel

COAL: 3.300" • Bullet length: 1.268" • Seat depth: 0.462" • Usable capacity: 62.6 / 70.8 gr H_2O

Powder	STEP 1 · 90%		STEP 2		STEP 3		STEP 4		STEP 5 · LIMIT			
	gr	fps	gr	fps	gr	fps	gr	fps	gr	fps	psi	Fill
Hodgdon SUPERFORMANCE	58.9	2,820	60.5	2,890	62.2	2,965	63.8	3,035	65.4	3,105	62,100	102%
Winchester StaBALL 6.5	56.5	2,835	58.1	2,905	59.6	2,970	61.2	3,035	62.8	3,105	62,300	101%
Accurate 4350	56.5	2,805	58.1	2,875	59.6	2,940	61.2	3,010	62.8	3,080	59,900	105%
Hodgdon Leverevolution	50.4	2,815	51.8	2,880	53.2	2,945	54.6	3,005	56.0	3,070	62,200	85%
Hodgdon H4350	55.6	2,795	57.1	2,860	58.7	2,930	60.3	3,000	61.8	3,065	62,300	100%
Reload Swiss RS60	54.8	2,785	56.3	2,850	57.8	2,915	59.4	2,990	60.9	3,060	62,300	100%
Ramshot Big Game	53.9	2,795	55.4	2,860	56.9	2,925	58.4	2,990	59.9	3,055	62,100	98%
Hodgdon BL-C(2)	51.2	2,795	52.6	2,855	54.0	2,915	55.5	2,985	56.9	3,045	62,100	91%
Vihtavuori N550	52.8	2,785	54.3	2,850	55.8	2,915	57.2	2,970	58.7	3,035	62,200	99%
Winchester 748	50.9	2,785	52.3	2,845	53.8	2,910	55.2	2,975	56.6	3,035	62,200	93%
IMR 4350	55.1	2,760	56.6	2,825	58.2	2,895	59.7	2,960	61.2	3,030	60,000	105%
Alliant Power Pro 4000-MR	57.1	2,750	58.7	2,815	60.3	2,885	61.8	2,950	63.4	3,020	62,100	103%
Alliant Reloder 17	53.7	2,745	55.2	2,815	56.7	2,880	58.2	2,950	59.7	3,020	62,300	96%
Winchester 760	54.4	2,760	55.9	2,825	57.4	2,890	58.9	2,955	60.4	3,020	62,300	99%
Hodgdon H4831SC	58.7	2,715	60.3	2,780	62.0	2,855	63.6	2,925	65.2	2,995	61,100	105%
Accurate 4064	49.2	2,725	50.6	2,785	52.0	2,850	53.3	2,905	54.7	2,970	62,300	97%
Reload Swiss RS50	50.4	2,715	51.8	2,780	53.2	2,840	54.6	2,900	56.0	2,960	62,100	94%
IMR 4064	48.1	2,715	49.4	2,775	50.8	2,835	52.1	2,890	53.4	2,950	62,200	91%
Vihtavuori N540	48.6	2,720	50.0	2,775	51.3	2,835	52.6	2,890	54.0	2,950	62,200	92%
Accurate 2520	47.0	2,665	48.3	2,720	49.6	2,775	50.9	2,835	52.2	2,890	62,100	86%

180 gr Bullet · 25" barrel

COAL: 3.200" • Bullet length: 1.277" • Seat depth: 0.571" • Usable capacity: 60.6 / 70.8 gr H_2O

Powder	STEP 1 · 90%		STEP 2		STEP 3		STEP 4		STEP 5 · LIMIT			
	gr	fps	gr	fps	gr	fps	gr	fps	gr	fps	psi	Fill
Hodgdon SUPERFORMANCE	56.7	2,710	58.3	2,775	59.9	2,845	61.4	2,910	63.0	2,980	62,300	102%
Accurate 4350	54.7	2,700	56.2	2,765	57.8	2,835	59.3	2,900	60.8	2,965	61,200	105%
Winchester StaBALL 6.5	54.3	2,705	55.8	2,770	57.3	2,830	58.8	2,895	60.3	2,960	62,300	100%
Hodgdon H4350	53.2	2,670	54.7	2,735	56.2	2,800	57.6	2,860	59.1	2,925	62,300	98%
Reload Swiss RS60	52.7	2,670	54.2	2,735	55.6	2,795	57.0	2,860	58.5	2,925	62,100	99%
Reload Swiss RS70	56.7	2,645	58.3	2,715	59.9	2,785	61.4	2,850	63.0	2,920	62,200	105%
IMR 4350	53.3	2,660	54.8	2,725	56.3	2,790	57.7	2,850	59.2	2,915	61,600	105%
Reload Swiss RS52	48.6	2,660	50.0	2,720	51.3	2,780	52.6	2,835	54.0	2,900	62,100	94%
Accurate 2700	51.8	2,645	53.2	2,705	54.6	2,760	56.1	2,830	57.5	2,890	62,300	97%
Hodgdon H4831SC	56.8	2,620	58.4	2,690	60.0	2,755	61.5	2,820	63.1	2,890	62,100	105%
Alliant Reloder 16	51.6	2,645	53.0	2,705	54.5	2,765	55.9	2,825	57.3	2,885	60,600	105%
Hodgdon H414	51.9	2,635	53.4	2,700	54.8	2,760	56.3	2,825	57.7	2,885	62,200	97%
Winchester 760	52.2	2,635	53.7	2,700	55.1	2,760	56.5	2,820	58.0	2,885	62,400	98%
Vihtavuori N550	50.3	2,640	51.7	2,700	53.1	2,755	54.5	2,815	55.9	2,875	62,300	97%
Hodgdon CFE 223	49.2	2,625	50.6	2,685	52.0	2,745	53.3	2,800	54.7	2,865	62,200	92%
Hodgdon H380	50.6	2,625	52.0	2,685	53.4	2,745	54.8	2,805	56.2	2,865	62,300	99%
IMR 4007 SSC	51.7	2,610	53.1	2,670	54.5	2,730	56.0	2,795	57.4	2,855	62,200	102%
Vihtavuori N150	47.2	2,590	48.5	2,645	49.8	2,705	51.1	2,760	52.4	2,815	62,200	97%
Reload Swiss RS50	48.3	2,580	49.6	2,635	51.0	2,695	52.4	2,755	53.7	2,810	62,300	93%
IMR 4064	45.8	2,570	47.1	2,625	48.3	2,680	49.6	2,735	50.9	2,790	62,100	90%

200 gr Bullet · 25" barrel

COAL: 3.340" • Bullet length: 1.397" • Seat depth: 0.551" • Usable capacity: 61.1 / 70.8 gr H_2O

Powder	STEP 1 · 90%		STEP 2		STEP 3		STEP 4		STEP 5 · LIMIT			
	gr	fps	gr	fps	gr	fps	gr	fps	gr	fps	psi	Fill
Hodgdon SUPERFORMANCE	55.6	2,595	57.1	2,655	58.7	2,725	60.3	2,790	61.8	2,850	62,300	99%
Accurate 4350	53.9	2,595	55.4	2,655	56.9	2,720	58.4	2,780	59.9	2,845	62,300	102%
Vihtavuori N555	53.8	2,590	55.3	2,650	56.8	2,715	58.3	2,775	59.8	2,835	61,100	105%
Norma URP	52.0	2,570	53.5	2,630	54.9	2,690	56.3	2,750	57.8	2,815	62,200	104%
Reload Swiss RS62	54.5	2,560	56.0	2,625	57.5	2,685	59.0	2,750	60.5	2,815	62,200	103%
Reload Swiss RS70	55.7	2,545	57.3	2,610	58.8	2,675	60.4	2,740	61.9	2,805	62,100	102%
Winchester StaBALL 6.5	52.9	2,560	54.4	2,620	55.8	2,680	57.3	2,740	58.8	2,800	62,200	97%
IMR 4831	53.8	2,535	55.3	2,595	56.8	2,660	58.3	2,725	59.8	2,785	62,200	105%
IMR 4955	54.6	2,530	56.1	2,590	57.7	2,655	59.2	2,720	60.7	2,780	62,200	100%
Hodgdon H4831SC	55.9	2,525	57.5	2,590	59.0	2,650	60.5	2,710	62.1	2,775	62,300	102%
IMR 4350	52.0	2,535	53.5	2,595	54.9	2,655	56.3	2,715	57.8	2,775	62,200	101%
Alliant Reloder 19	54.4	2,515	55.9	2,580	57.4	2,640	58.9	2,705	60.4	2,765	60,400	105%
Norma MRP	55.5	2,510	57.0	2,570	58.6	2,635	60.2	2,700	61.7	2,760	60,600	105%
Ramshot Big Game	50.3	2,515	51.7	2,570	53.1	2,630	54.5	2,685	55.9	2,745	62,200	93%
Hodgdon H414	50.8	2,510	52.2	2,565	53.6	2,625	55.0	2,685	56.4	2,740	62,300	94%
Winchester 760	50.9	2,500	52.3	2,560	53.8	2,620	55.2	2,680	56.6	2,735	62,100	95%
Alliant Power Pro 2000-MR	49.1	2,505	50.5	2,560	51.8	2,615	53.1	2,670	54.5	2,730	62,200	94%
IMR 4007 SSC	50.7	2,495	52.1	2,550	53.5	2,610	54.9	2,670	56.3	2,725	62,300	99%
Hodgdon H380	49.1	2,480	50.5	2,535	51.8	2,585	53.1	2,640	54.5	2,700	62,300	95%
Vihtavuori N550	48.2	2,470	49.5	2,520	50.9	2,575	52.2	2,630	53.5	2,680	62,200	92%

220 gr Bullet · 25" barrel

COAL: 3.300" • Bullet length: 1.396" • Seat depth: 0.590" • Usable capacity: 60.4 / 70.8 gr H_2O

Powder	STEP 1 · 90%		STEP 2		STEP 3		STEP 4		STEP 5 · LIMIT			
	gr	fps	gr	fps	gr	fps	gr	fps	gr	fps	psi	Fill
Alliant Reloder 26	56.8	2,490	58.4	2,550	60.0	2,615	61.5	2,675	63.1	2,740	60,600	105%
Hodgdon SUPERFORMANCE	53.8	2,475	55.3	2,535	56.8	2,590	58.3	2,650	59.8	2,715	62,100	97%
Accurate 4350	52.1	2,465	53.5	2,520	55.0	2,580	56.5	2,645	57.9	2,700	62,200	100%
Vihtavuori N555	51.8	2,470	53.2	2,525	54.6	2,580	56.1	2,640	57.5	2,695	62,300	102%
Reload Swiss RS62	52.8	2,445	54.3	2,505	55.8	2,565	57.2	2,625	58.7	2,685	62,200	101%
Norma URP	50.2	2,450	51.6	2,505	53.0	2,565	54.4	2,625	55.8	2,680	62,200	101%
Reload Swiss RS70	54.1	2,440	55.6	2,500	57.1	2,560	58.6	2,620	60.1	2,680	62,300	100%
Alliant Reloder 19	53.4	2,435	54.9	2,495	56.3	2,555	57.8	2,615	59.3	2,675	62,300	104%
Alliant Reloder 22	53.7	2,415	55.2	2,475	56.7	2,535	58.2	2,595	59.7	2,655	59,600	105%
Ramshot Hunter	52.3	2,425	53.8	2,485	55.2	2,540	56.6	2,595	58.1	2,655	62,300	102%
Hodgdon H4831SC	54.2	2,410	55.7	2,470	57.2	2,530	58.7	2,590	60.2	2,650	62,200	100%
Winchester StaBALL 6.5	51.0	2,420	52.4	2,475	53.9	2,535	55.3	2,590	56.7	2,645	62,300	95%
Alliant Power Pro 4000-MR	52.3	2,405	53.8	2,465	55.2	2,520	56.6	2,575	58.1	2,635	62,300	98%
IMR 7828	54.6	2,400	56.1	2,455	57.7	2,520	59.2	2,575	60.7	2,635	62,300	101%
IMR 4350	50.0	2,400	51.4	2,455	52.8	2,515	54.2	2,570	55.6	2,625	62,200	99%
Winchester 760	49.2	2,375	50.6	2,430	52.0	2,485	53.3	2,535	54.7	2,595	62,300	93%
Accurate 3100	52.6	2,355	54.0	2,410	55.5	2,470	57.0	2,530	58.4	2,590	60,300	105%
IMR 4007 SSC	49.0	2,370	50.4	2,425	51.7	2,475	53.0	2,530	54.4	2,585	62,200	96%
Ramshot Big Game	48.4	2,375	49.8	2,430	51.1	2,480	52.4	2,530	53.8	2,585	62,300	91%
Vihtavuori N160	51.0	2,365	52.4	2,420	53.9	2,475	55.3	2,530	56.7	2,585	62,300	102%

.30-30 Winchester

The .30-30 Winchester first appeared in Winchester's catalog of August 1895 as the .30 Winchester Smokeless. It was chambered in the Model 1894 lever-action rifle and carbine. Together with the .25-35 Winchester it was among the first American small-bore sporting cartridges designed for smokeless powder. Winchester also called the rimmed round the .30 Winchester Center Fire (.30 WCF). Marlin chambered it in its Model 1893 rifle under the name .30-30. That name reflected the original load of 30 grains of smokeless powder. With Winchester's name appended it became the standard designation.

Common modern loads use 150-grain bullets at about 2,390 fps and 170-grain bullets at about 2,200 fps from a 24-inch barrel. Flat-nose and round-nose bullets are traditional because tubular magazines stack cartridges nose to primer. Soft polymer-tipped bullets now permit more aerodynamic shapes. The .30-30 is the most common cartridge fired in lever-action rifles. It has long been used for deer and black bear at moderate ranges. Rifles and factory ammunition remain widely available.

Cartridge specifications	
Bullet Diameter	**0.308" (7.82 mm)**
Max Case Length	**2.039" (51.79 mm)**
Case Trim Length	**2.029" (51.54 mm)**
Max COAL	**2.550" (64.77 mm)**
Primer Pocket	**Large Rifle**
Standard Twist	**1:12"**
Case Capacity	**45.0 gr H_2O**
Max Pressure	**42,000 psi (SAAMI)**

100 gr Bullet · 25" barrel

COAL: 2.345" • Bullet length: 0.616" • Seat depth: 0.310" • Usable capacity: 39.8 / 45.0 gr H_2O

Powder	STEP 1 · 90%		STEP 2		STEP 3		STEP 4		STEP 5 · LIMIT			
	gr	fps	gr	fps	gr	fps	gr	fps	gr	fps	psi	Fill
Hodgdon CFE BLK	32.2	2,845	33.1	2,905	34.0	2,970	34.9	3,030	35.8	3,095	42,000	93%
Shooters World AR Plus	34.7	2,800	35.7	2,865	36.7	2,930	37.6	2,990	38.6	3,060	41,800	98%
Hodgdon Leverevolution	39.0	2,765	40.1	2,835	41.1	2,900	42.2	2,970	43.3	3,045	41,800	104%
Alliant AR-Comp	35.0	2,755	36.0	2,820	37.0	2,885	37.9	2,945	38.9	3,010	40,800	105%
Accurate 2460	36.4	2,740	37.4	2,805	38.4	2,870	39.4	2,930	40.4	2,995	41,900	102%
Ramshot X-Terminator	34.9	2,715	35.9	2,780	36.8	2,835	37.8	2,900	38.8	2,965	41,800	99%
Norma 200	31.8	2,680	32.7	2,745	33.5	2,800	34.4	2,860	35.3	2,925	41,800	96%
Reload Swiss RS40	33.1	2,670	34.0	2,730	35.0	2,795	35.9	2,860	36.8	2,920	41,900	98%
Vihtavuori N130	30.9	2,660	31.8	2,725	32.6	2,780	33.4	2,835	34.3	2,900	42,000	99%
Accurate 2520	36.3	2,640	37.3	2,705	38.3	2,770	39.3	2,830	40.3	2,895	41,800	104%
Vihtavuori N133	32.7	2,635	33.6	2,695	34.5	2,755	35.4	2,815	36.3	2,875	39,700	105%
Hodgdon H335	34.8	2,600	35.8	2,665	36.8	2,730	37.7	2,790	38.7	2,855	42,000	96%
Accurate LT-32	31.6	2,610	32.5	2,670	33.4	2,730	34.2	2,785	35.1	2,850	41,900	97%
Vihtavuori N135	34.6	2,610	35.5	2,665	36.5	2,730	37.5	2,795	38.4	2,850	41,800	105%
Ramshot TAC	34.3	2,600	35.3	2,665	36.2	2,720	37.1	2,780	38.1	2,845	41,900	102%
Alliant Reloder 10x	31.1	2,595	32.0	2,660	32.9	2,720	33.7	2,780	34.6	2,840	41,700	98%
Hodgdon H4895	35.0	2,585	36.0	2,650	37.0	2,715	37.9	2,775	38.9	2,840	41,800	101%
Alliant Power Pro Varmint	35.4	2,580	36.4	2,645	37.3	2,705	38.3	2,770	39.3	2,835	41,900	104%
Hodgdon H322	32.0	2,590	32.9	2,650	33.8	2,715	34.6	2,770	35.5	2,830	41,800	95%
IMR 3031	33.1	2,555	34.0	2,615	35.0	2,685	35.9	2,745	36.8	2,805	41,800	99%

110 gr Bullet · 25" barrel

COAL: 2.411" • Bullet length: 0.680" • Seat depth: 0.308" • Usable capacity: 39.6 / 45.0 gr H_2O

Powder	STEP 1 · 90%		STEP 2		STEP 3		STEP 4		STEP 5 · LIMIT			
	gr	fps	gr	fps	gr	fps	gr	fps	gr	fps	psi	Fill
Hodgdon Leverevolution	38.3	2,685	39.3	2,750	40.4	2,820	41.5	2,890	42.5	2,950	41,900	103%
Hodgdon CFE BLK	31.4	2,710	32.3	2,770	33.1	2,825	34.0	2,885	34.9	2,945	41,900	91%
Shooters World AR Plus	34.0	2,690	35.0	2,755	35.9	2,815	36.8	2,875	37.8	2,940	42,000	97%
Alliant AR-Comp	34.5	2,670	35.5	2,735	36.4	2,790	37.3	2,850	38.3	2,910	42,000	104%
Vihtavuori N530	34.8	2,630	35.8	2,695	36.8	2,760	37.7	2,815	38.7	2,880	41,900	105%
Accurate 2460	35.2	2,620	36.2	2,685	37.2	2,745	38.1	2,800	39.1	2,860	42,000	99%
Ramshot X-Terminator	33.8	2,595	34.7	2,650	35.6	2,705	36.6	2,770	37.5	2,825	42,000	96%
Accurate 2230	33.8	2,585	34.8	2,645	35.7	2,700	36.6	2,755	37.6	2,815	41,800	96%
Vihtavuori N133	32.6	2,580	33.5	2,640	34.4	2,695	35.3	2,755	36.2	2,810	42,000	105%
Reload Swiss RS40	32.3	2,565	33.2	2,625	34.1	2,685	35.0	2,745	35.9	2,805	41,800	96%
Accurate 2520	35.5	2,555	36.5	2,620	37.5	2,680	38.4	2,735	39.4	2,795	41,800	102%
Vihtavuori N130	30.0	2,550	30.8	2,605	31.6	2,655	32.5	2,720	33.3	2,775	41,900	96%
Hodgdon BL-C(2)	37.3	2,500	38.3	2,565	39.3	2,625	40.4	2,695	41.4	2,760	41,500	105%
Alliant Reloder 7	29.2	2,535	30.0	2,590	30.8	2,645	31.6	2,700	32.4	2,755	41,800	87%
Hodgdon H335	34.0	2,515	35.0	2,575	35.9	2,635	36.8	2,690	37.8	2,755	41,900	94%
Vihtavuori N135	33.7	2,520	34.6	2,575	35.5	2,630	36.5	2,695	37.4	2,750	42,000	102%
Alliant Reloder 10x	30.4	2,505	31.3	2,565	32.1	2,620	32.9	2,675	33.8	2,740	41,800	96%
Ramshot TAC	33.5	2,505	34.4	2,560	35.4	2,625	36.3	2,680	37.2	2,740	41,800	100%
Accurate LT-32	30.9	2,505	31.8	2,565	32.6	2,620	33.4	2,675	34.3	2,735	42,000	95%
IMR 3031	32.4	2,480	33.3	2,535	34.2	2,595	35.1	2,655	36.0	2,715	41,900	97%

130 gr Bullet · 25" barrel

COAL: 2.540" • Bullet length: 0.914" • Seat depth: 0.413" • Usable capacity: 37.4 / 45.0 gr H_2O

Powder	STEP 1 · 90%		STEP 2		STEP 3		STEP 4		STEP 5 · LIMIT			
	gr	fps	gr	fps	gr	fps	gr	fps	gr	fps	psi	Fill
Hodgdon Leverevolution	35.6	2,465	36.6	2,525	37.6	2,590	38.6	2,650	39.6	2,710	41,900	101%
Shooters World AR Plus	31.6	2,440	32.5	2,500	33.4	2,555	34.2	2,605	35.1	2,665	41,900	95%
Hodgdon CFE BLK	29.1	2,435	29.9	2,485	30.7	2,540	31.5	2,595	32.3	2,645	41,900	89%
Vihtavuori N530	32.0	2,415	32.9	2,470	33.8	2,530	34.6	2,580	35.5	2,635	41,800	102%
Alliant AR-Comp	31.8	2,410	32.7	2,465	33.5	2,515	34.4	2,575	35.3	2,630	41,900	101%
Hodgdon BL-C(2)	34.9	2,320	35.9	2,385	36.8	2,440	37.8	2,500	38.8	2,560	41,800	104%
Vihtavuori N140	34.0	2,330	35.0	2,390	35.9	2,445	36.8	2,500	37.8	2,560	41,900	103%
Accurate 2520	32.9	2,330	33.8	2,385	34.8	2,445	35.7	2,500	36.6	2,555	41,800	101%
Ramshot X-Terminator	30.8	2,325	31.7	2,380	32.5	2,425	33.4	2,480	34.2	2,530	42,000	93%
Winchester 748	34.4	2,295	35.4	2,355	36.3	2,410	37.3	2,470	38.2	2,525	41,900	105%
Hodgdon H4895	31.7	2,300	32.6	2,355	33.5	2,415	34.3	2,465	35.2	2,520	41,800	97%
Hodgdon H335	31.6	2,295	32.5	2,350	33.4	2,405	34.2	2,455	35.1	2,515	41,800	93%
Alliant Power Pro Varmint	32.1	2,285	33.0	2,345	33.9	2,400	34.8	2,455	35.7	2,510	41,700	101%
IMR 8208 XBR	31.1	2,285	32.0	2,345	32.9	2,400	33.7	2,450	34.6	2,505	41,800	100%
Shooters World Match Rifle	32.9	2,285	33.8	2,340	34.7	2,395	35.6	2,450	36.5	2,505	41,700	100%
Vihtavuori N130	27.5	2,290	28.3	2,345	29.1	2,400	29.8	2,445	30.6	2,500	41,900	94%
IMR 3031	30.0	2,265	30.8	2,315	31.6	2,370	32.5	2,425	33.3	2,480	41,800	95%
Alliant Reloder 7	26.8	2,270	27.6	2,325	28.3	2,375	29.1	2,425	29.8	2,475	42,000	85%
Shooters World The Creed	33.1	2,235	34.0	2,290	35.0	2,350	35.9	2,405	36.8	2,460	41,700	102%
IMR 4064	32.1	2,220	33.0	2,275	33.9	2,330	34.8	2,385	35.7	2,435	41,900	102%

150 gr Bullet · 25" barrel

COAL: 2.520" • Bullet length: 1.098" • Seat depth: 0.617" • Usable capacity: 34.5 / 45.0 gr H_2O

Powder	STEP 1 · 90%		STEP 2		STEP 3		STEP 4		STEP 5 · LIMIT			
	gr	fps	gr	fps	gr	fps	gr	fps	gr	fps	psi	Fill
Hodgdon Leverevolution	32.9	2,280	33.8	2,335	34.7	2,390	35.6	2,445	36.5	2,500	42,000	101%
Shooters World AR Plus	29.1	2,230	29.9	2,280	30.7	2,330	31.5	2,385	32.3	2,435	42,000	95%
Vihtavuori N530	29.2	2,220	30.0	2,270	30.8	2,320	31.6	2,370	32.4	2,420	41,800	101%
Hodgdon CFE BLK	26.6	2,200	27.4	2,255	28.1	2,300	28.9	2,355	29.6	2,400	41,800	88%
Alliant AR-Comp	29.1	2,195	29.9	2,245	30.7	2,295	31.5	2,345	32.3	2,395	41,900	100%
Hodgdon BL-C(2)	32.2	2,150	33.1	2,205	34.0	2,260	34.9	2,315	35.8	2,370	41,900	104%
Vihtavuori N140	31.2	2,150	32.1	2,205	33.0	2,260	33.8	2,305	34.7	2,360	41,900	103%
Norma 202	30.0	2,155	30.8	2,205	31.6	2,250	32.5	2,305	33.3	2,355	40,600	105%
Accurate 2460	29.3	2,145	30.1	2,195	31.0	2,245	31.8	2,295	32.6	2,345	42,000	95%
Accurate 2520	30.3	2,140	31.2	2,195	32.0	2,245	32.9	2,300	33.7	2,345	41,800	100%
Winchester 748	31.7	2,125	32.6	2,180	33.5	2,235	34.3	2,280	35.2	2,335	41,900	105%
Hodgdon H4895	29.1	2,115	29.9	2,165	30.7	2,215	31.5	2,265	32.3	2,315	41,700	97%
Alliant Power Pro Varmint	29.6	2,110	30.4	2,155	31.3	2,215	32.1	2,260	32.9	2,310	42,000	101%
Hodgdon H335	29.1	2,110	29.9	2,155	30.7	2,205	31.5	2,255	32.3	2,305	41,800	92%
IMR 8208 XBR	28.4	2,095	29.2	2,145	30.0	2,195	30.8	2,245	31.6	2,295	41,800	99%
Shooters World The Patriot	28.0	2,100	28.8	2,150	29.6	2,200	30.3	2,240	31.1	2,290	42,000	94%
Accurate 2230	28.0	2,095	28.8	2,140	29.6	2,190	30.3	2,230	31.1	2,280	41,800	91%
IMR 3031	27.5	2,080	28.3	2,130	29.0	2,175	29.8	2,225	30.5	2,270	41,800	94%
Vihtavuori N130	25.1	2,085	25.8	2,130	26.5	2,180	27.2	2,225	27.9	2,270	41,800	93%
Alliant Reloder 7	24.4	2,055	25.1	2,105	25.8	2,150	26.4	2,195	27.1	2,240	41,800	83%

170 gr Bullet · 25" barrel

COAL: 2.520" • Bullet length: 1.006" • Seat depth: 0.525" • Usable capacity: 36.0 / 45.0 gr H_2O

Powder	STEP 1 · 90%		STEP 2		STEP 3		STEP 4		STEP 5 · LIMIT			
	gr	fps	gr	fps	gr	fps	gr	fps	gr	fps	psi	Fill
Hodgdon Leverevolution	32.7	2,185	33.6	2,235	34.5	2,290	35.4	2,340	36.3	2,395	41,700	96%
Vihtavuori N540	32.0	2,135	32.9	2,185	33.8	2,235	34.6	2,280	35.5	2,330	41,000	105%
Hodgdon BL-C(2)	32.3	2,090	33.2	2,140	34.1	2,195	35.0	2,245	35.9	2,300	42,000	100%
Shooters World AR Plus	28.8	2,110	29.6	2,155	30.4	2,205	31.2	2,250	32.0	2,300	41,900	90%
Hodgdon CFE 223	32.0	2,060	32.9	2,110	33.8	2,160	34.7	2,210	35.6	2,265	41,700	101%
Vihtavuori N140	30.9	2,065	31.8	2,115	32.6	2,160	33.4	2,205	34.3	2,260	41,800	97%
Vihtavuori N530	28.0	2,075	28.8	2,125	29.6	2,170	30.3	2,215	31.1	2,260	41,800	93%
Winchester 748	31.6	2,055	32.5	2,110	33.4	2,160	34.2	2,205	35.1	2,260	41,800	100%
Norma 202	29.8	2,060	30.6	2,105	31.5	2,160	32.3	2,205	33.1	2,250	41,900	100%
Alliant AR-Comp	28.4	2,055	29.2	2,100	29.9	2,140	30.7	2,190	31.5	2,235	41,800	94%
Accurate 2520	30.0	2,040	30.8	2,090	31.6	2,135	32.5	2,185	33.3	2,230	41,800	95%
Alliant Power Pro 2000-MR	32.3	2,015	33.2	2,065	34.1	2,115	35.0	2,170	35.9	2,220	41,200	105%
Hodgdon Varget	29.8	2,015	30.6	2,065	31.5	2,115	32.3	2,165	33.1	2,210	41,900	96%
Alliant Power Pro Varmint	29.3	2,010	30.1	2,060	31.0	2,110	31.8	2,155	32.6	2,205	41,800	96%
Reload Swiss RS50	31.1	2,005	32.0	2,060	32.9	2,110	33.7	2,155	34.6	2,205	41,700	101%
Shooters World The Creed	30.2	1,995	31.1	2,050	31.9	2,095	32.8	2,145	33.6	2,195	41,700	97%
Accurate 2700	32.9	1,985	33.8	2,035	34.8	2,090	35.7	2,140	36.6	2,190	41,900	104%
Ramshot TAC	28.5	1,995	29.3	2,045	30.1	2,090	30.9	2,140	31.7	2,185	42,000	94%
IMR 3031	27.2	1,980	27.9	2,020	28.7	2,070	29.4	2,110	30.2	2,160	41,800	90%
IMR 4895	28.5	1,960	29.3	2,005	30.1	2,055	30.9	2,100	31.7	2,145	41,900	91%

.30-378 Weatherby Magnum

Roy Weatherby developed the .30-378 Weatherby Magnum in 1959 for a U.S. Army contract. Redstone Arsenal had requested a rifle cartridge capable of extremely high velocities with light bullets for armor-testing work. The cartridge was formed by necking the belted .378 Weatherby Magnum case down to .30 caliber. It retains Weatherby's double-radius shoulder. Long-range target shooters later took it up. Weatherby added it to its commercial line in 1996. That was nearly four decades after its development.

Weatherby factory loads include a 165-grain bullet at about 3,500 fps, a 180-grain bullet at about 3,420 fps and a 200-grain bullet at about 3,160 fps. The cartridge is used for big game at long range in North America, Asia and Africa. It has also been used to set records in long-range benchrest competition. Recoil and muzzle blast are substantial. Rifles in this chambering are commonly fitted with muzzle brakes. Weatherby's Mark V rifles in this chambering use a 1-in-10-inch twist.

Cartridge specifications	
Bullet Diameter	**0.308" (7.82 mm)**
Max Case Length	**2.913" (73.99 mm)**
Case Trim Length	**2.903" (73.74 mm)**
Max COAL	**3.750" (95.25 mm)**
Primer Pocket	**Large Rifle**
Standard Twist	**1:10"**
Case Capacity	**128.3 gr H_2O**
Max Pressure	**4,400 bar / 63,817 psi (C.I.P.)**

155 gr Bullet · 25" barrel

COAL: 3.648" • Bullet length: 1.238" • Seat depth: 0.503" • Usable capacity: 119.3 / 128.3 gr H_2O

Powder	STEP 1 · 90%		STEP 2		STEP 3		STEP 4		STEP 5 · LIMIT			
	gr	fps	gr	fps	gr	fps	gr	fps	gr	fps	psi	Fill
Hodgdon Retumbo	105.3	3,360	108.2	3,445	111.2	3,530	114.1	3,615	117.0	3,705	63,600	102%
Ramshot Grand	103.6	3,330	106.5	3,415	109.3	3,495	112.2	3,580	115.1	3,670	63,600	98%
Accurate MagPro	103.1	3,325	105.9	3,405	108.8	3,490	111.7	3,580	114.5	3,665	63,800	98%
Alliant Reloder 26	98.6	3,340	101.3	3,415	104.1	3,500	106.8	3,580	109.6	3,665	63,800	92%
Ramshot Magnum	105.3	3,295	108.2	3,380	111.2	3,465	114.1	3,550	117.0	3,635	63,700	98%
Hodgdon H1000	102.2	3,295	105.0	3,375	107.8	3,460	110.7	3,545	113.5	3,630	63,700	103%
Vihtavuori N570	102.9	3,290	105.8	3,375	108.6	3,460	111.5	3,545	114.3	3,630	63,700	99%
IMR 8133	105.8	3,280	108.7	3,365	111.7	3,455	114.6	3,540	117.5	3,625	63,800	102%
Alliant Reloder 25	100.5	3,280	103.3	3,360	106.1	3,445	108.9	3,525	111.7	3,610	63,800	102%
Reload Swiss RS76	103.7	3,270	106.6	3,350	109.5	3,430	112.3	3,510	115.2	3,595	63,800	97%
Alliant Reloder 22	94.6	3,280	97.2	3,355	99.8	3,430	102.5	3,510	105.1	3,590	63,700	94%
Ramshot LRT	110.6	3,235	113.7	3,325	116.8	3,410	119.8	3,500	122.9	3,590	60,400	105%
Alliant Reloder 23	93.5	3,280	96.1	3,355	98.7	3,430	101.3	3,510	103.9	3,585	63,800	94%
Winchester Supreme 780	96.8	3,245	99.5	3,320	102.2	3,400	104.8	3,475	107.5	3,555	63,800	91%
Hodgdon H4831SC	94.2	3,240	96.8	3,315	99.5	3,390	102.1	3,470	104.7	3,545	63,800	88%
Norma MRP	94.3	3,235	96.9	3,310	99.5	3,380	102.2	3,460	104.8	3,535	63,700	91%
Vihtavuori N560	93.2	3,205	95.8	3,280	98.4	3,350	101.0	3,420	103.6	3,495	63,800	91%
IMR 7828	93.7	3,170	96.3	3,245	98.9	3,320	101.5	3,395	104.1	3,470	63,700	88%
Vihtavuori 24N41	106.4	3,125	109.4	3,210	112.3	3,290	115.3	3,380	118.2	3,465	63,800	101%
Vihtavuori N170	98.1	3,140	100.8	3,210	103.5	3,285	106.3	3,355	109.0	3,430	63,800	95%

165 gr Bullet · 25" barrel

COAL: 3.600" • Bullet length: 1.275" • Seat depth: 0.587" • Usable capacity: 118.0 / 128.3 gr H_2O

Powder	STEP 1 · 90%		STEP 2		STEP 3		STEP 4		STEP 5 · LIMIT			
	gr	fps	gr	fps	gr	fps	gr	fps	gr	fps	psi	Fill
Hodgdon Retumbo	103.2	3,275	106.1	3,355	109.0	3,440	111.8	3,520	114.7	3,605	63,700	101%
Accurate MagPro	101.2	3,245	104.0	3,325	106.8	3,405	109.6	3,490	112.4	3,575	63,700	97%
Ramshot Grand	101.7	3,245	104.5	3,325	107.3	3,405	110.2	3,490	113.0	3,575	63,600	98%
Alliant Reloder 26	96.5	3,250	99.2	3,325	101.8	3,400	104.5	3,480	107.2	3,560	63,800	91%
Ramshot Magnum	103.4	3,220	106.3	3,305	109.2	3,385	112.0	3,470	114.9	3,555	63,800	98%
IMR 8133	103.9	3,205	106.8	3,290	109.7	3,370	112.5	3,455	115.4	3,540	63,800	102%
Hodgdon H1000	100.2	3,215	103.0	3,295	105.8	3,375	108.5	3,455	111.3	3,535	63,800	102%
Vihtavuori N570	100.4	3,210	103.2	3,290	106.0	3,370	108.7	3,450	111.5	3,535	63,800	97%
Vihtavuori N568	103.5	3,175	106.4	3,260	109.3	3,350	112.1	3,435	115.0	3,525	63,700	101%
Alliant Reloder 25	98.6	3,200	101.3	3,275	104.1	3,360	106.8	3,435	109.6	3,520	63,800	101%
Winchester StaBALL HD	103.1	3,195	105.9	3,275	108.8	3,355	111.7	3,435	114.5	3,520	63,800	99%
Alliant Reloder 19	92.0	3,210	94.5	3,285	97.1	3,360	99.7	3,435	102.2	3,510	63,700	92%
Hodgdon Hybrid 100V	87.3	3,215	89.7	3,285	92.2	3,360	94.6	3,430	97.0	3,505	63,700	92%
Alliant Reloder 22	92.5	3,190	95.1	3,265	97.7	3,340	100.2	3,410	102.8	3,485	63,800	93%
Alliant Reloder 23	91.3	3,185	93.8	3,255	96.3	3,325	98.9	3,400	101.4	3,470	63,700	93%
Hodgdon H4831SC	92.2	3,150	94.8	3,225	97.3	3,295	99.9	3,370	102.4	3,440	63,700	87%
Norma MRP	92.3	3,145	94.8	3,215	97.4	3,290	100.0	3,360	102.5	3,435	63,700	90%
Vihtavuori 24N41	104.2	3,060	107.1	3,140	110.0	3,220	112.9	3,305	115.8	3,390	63,700	100%
IMR 7828	91.6	3,085	94.1	3,155	96.7	3,230	99.3	3,305	101.8	3,375	63,700	87%
Vihtavuori N170	95.8	3,045	98.5	3,115	101.1	3,185	103.8	3,255	106.4	3,325	63,700	94%

180 gr Bullet · 25" barrel

COAL: 3.600" • Bullet length: 1.322" • Seat depth: 0.635" • Usable capacity: 117.0 / 128.3 gr H_2O

Powder	STEP 1 · 90%		STEP 2		STEP 3		STEP 4		STEP 5 · LIMIT			
	gr	fps	gr	fps	gr	fps	gr	fps	gr	fps	psi	Fill
Hodgdon Retumbo	100.6	3,150	103.4	3,225	106.2	3,300	109.0	3,380	111.8	3,460	63,700	99%
Accurate MagPro	99.0	3,135	101.8	3,210	104.5	3,290	107.3	3,370	110.0	3,450	63,700	96%
Ramshot LRT	108.2	3,110	111.2	3,190	114.2	3,275	117.2	3,360	120.2	3,445	63,800	105%
Ramshot Grand	99.5	3,130	102.3	3,205	105.0	3,285	107.8	3,360	110.6	3,440	63,800	96%
Ramshot Magnum	101.1	3,115	103.9	3,195	106.7	3,270	109.5	3,350	112.3	3,430	63,800	96%
Vihtavuori N568	101.3	3,095	104.1	3,175	106.9	3,255	109.7	3,340	112.5	3,425	63,800	99%
IMR 8133	101.6	3,095	104.4	3,175	107.3	3,255	110.1	3,335	112.9	3,415	63,600	100%
Hodgdon H1000	97.7	3,095	100.4	3,170	103.1	3,245	105.8	3,320	108.5	3,400	63,800	101%
Alliant Reloder 25	96.4	3,090	99.1	3,160	101.8	3,240	104.4	3,310	107.1	3,390	63,800	100%
Vihtavuori N570	96.9	3,085	99.6	3,160	102.3	3,235	105.0	3,310	107.7	3,385	63,700	95%
Winchester StaBALL HD	100.4	3,070	103.2	3,145	106.0	3,225	108.8	3,300	111.6	3,380	63,700	97%
Alliant Reloder 19	89.7	3,090	92.2	3,160	94.7	3,230	97.2	3,305	99.7	3,375	63,800	90%
Hodgdon H50BMG	108.5	3,050	111.5	3,130	114.5	3,210	117.5	3,290	120.5	3,375	61,400	105%
Hodgdon Hybrid 100V	85.3	3,085	87.7	3,155	90.0	3,220	92.4	3,290	94.8	3,360	63,800	91%
Reload Swiss RS76	99.2	3,060	102.0	3,135	104.7	3,205	107.5	3,280	110.2	3,355	63,800	95%
IMR 7977	96.4	3,045	99.1	3,120	101.8	3,195	104.4	3,270	107.1	3,345	63,800	99%
Alliant Reloder 22	89.8	3,055	92.3	3,125	94.8	3,195	97.3	3,265	99.8	3,335	63,700	91%
Alliant Reloder 23	88.5	3,045	91.0	3,110	93.4	3,180	95.8	3,245	98.3	3,315	63,700	91%
Winchester Supreme 780	91.9	3,030	94.5	3,105	97.0	3,175	99.5	3,245	102.1	3,315	63,800	88%
Vihtavuori 24N41	101.8	2,970	104.6	3,045	107.4	3,125	110.3	3,205	113.1	3,285	63,800	98%

190 gr Bullet · 25" barrel

COAL: 3.625" • Bullet length: 1.353" • Seat depth: 0.641" • Usable capacity: 117.0 / 128.3 gr H_2O

Powder	STEP 1 · 90%		STEP 2		STEP 3		STEP 4		STEP 5 · LIMIT			
	gr	fps	gr	fps	gr	fps	gr	fps	gr	fps	psi	Fill
Accurate MagPro	98.0	3,070	100.7	3,145	103.5	3,220	106.2	3,295	108.9	3,375	63,800	95%
Hodgdon Retumbo	99.3	3,075	102.0	3,145	104.8	3,220	107.5	3,295	110.3	3,375	63,800	98%
Ramshot LRT	107.0	3,045	110.0	3,125	113.0	3,205	115.9	3,285	118.9	3,370	63,800	104%
Ramshot Grand	98.5	3,060	101.2	3,135	104.0	3,210	106.7	3,285	109.4	3,360	63,800	95%
Vihtavuori N568	100.1	3,040	102.9	3,120	105.7	3,200	108.4	3,275	111.2	3,360	63,700	98%
Ramshot Magnum	99.9	3,050	102.7	3,125	105.5	3,200	108.2	3,275	111.0	3,355	63,800	95%
IMR 8133	100.6	3,035	103.4	3,110	106.2	3,190	109.0	3,265	111.8	3,345	63,700	99%
Hodgdon H50BMG	108.5	3,020	111.5	3,095	114.5	3,175	117.5	3,255	120.5	3,340	63,600	105%
Alliant Reloder 26	92.3	3,040	94.9	3,110	97.4	3,180	100.0	3,250	102.6	3,325	63,800	88%
Hodgdon H1000	96.4	3,025	99.1	3,095	101.8	3,170	104.4	3,240	107.1	3,315	63,800	99%
Alliant Reloder 25	95.2	3,015	97.8	3,090	100.5	3,160	103.2	3,235	105.8	3,310	63,700	99%
Vihtavuori N570	95.2	3,010	97.8	3,080	100.5	3,155	103.2	3,230	105.8	3,300	63,800	93%
Winchester StaBALL HD	99.1	3,000	101.8	3,070	104.6	3,145	107.3	3,220	110.1	3,295	63,700	96%
Reload Swiss RS76	97.9	2,985	100.6	3,055	103.3	3,125	106.1	3,200	108.8	3,270	63,700	94%
IMR 7977	95.2	2,975	97.8	3,045	100.5	3,120	103.2	3,195	105.8	3,265	63,800	98%
Reload Swiss RS70	88.4	2,980	90.9	3,045	93.3	3,115	95.8	3,180	98.2	3,250	63,800	85%
Alliant Reloder 33	101.8	2,940	104.6	3,015	107.4	3,090	110.3	3,165	113.1	3,240	60,800	105%
IMR 7828SSC	89.6	2,960	92.1	3,025	94.6	3,095	97.1	3,165	99.6	3,230	63,700	89%
Alliant Reloder 23	87.0	2,960	89.4	3,025	91.8	3,090	94.3	3,160	96.7	3,225	63,800	90%
Vihtavuori 24N41	100.5	2,915	103.3	2,990	106.1	3,065	108.9	3,140	111.7	3,220	63,700	97%

200 gr Bullet · 25" barrel

COAL: 3.630" • Bullet length: 1.489" • Seat depth: 0.772" • Usable capacity: 114.7 / 128.3 gr H_2O

Powder	STEP 1 · 90%		STEP 2		STEP 3		STEP 4		STEP 5 · LIMIT			
	gr	fps	gr	fps	gr	fps	gr	fps	gr	fps	psi	Fill
Accurate MagPro	95.7	2,995	98.3	3,065	101.0	3,140	103.7	3,215	106.3	3,285	63,700	95%
Ramshot LRT	104.5	2,970	107.4	3,050	110.3	3,125	113.2	3,205	116.1	3,285	63,700	103%
Hodgdon Retumbo	96.8	2,990	99.5	3,060	102.2	3,135	104.8	3,205	107.5	3,280	63,800	97%
Vihtavuori N568	97.7	2,975	100.4	3,050	103.1	3,125	105.8	3,205	108.5	3,280	63,700	98%
Ramshot Grand	96.1	2,980	98.8	3,050	101.4	3,125	104.1	3,195	106.8	3,270	63,700	95%
Ramshot Magnum	97.5	2,975	100.2	3,050	102.9	3,120	105.6	3,195	108.3	3,270	63,800	95%
IMR 8133	98.3	2,960	101.0	3,035	103.8	3,110	106.5	3,185	109.2	3,260	63,700	99%
Hodgdon H50BMG	105.9	2,940	108.9	3,020	111.8	3,095	114.8	3,175	117.7	3,255	63,800	105%
Alliant Reloder 26	89.8	2,955	92.3	3,020	94.8	3,090	97.3	3,160	99.8	3,230	63,700	87%
Hodgdon H1000	93.9	2,940	96.5	3,010	99.1	3,080	101.7	3,150	104.3	3,225	63,700	99%
Alliant Reloder 25	92.9	2,940	95.5	3,010	98.1	3,080	100.6	3,150	103.2	3,220	63,700	98%
Vihtavuori N570	92.4	2,930	95.0	3,000	97.6	3,070	100.1	3,135	102.7	3,210	63,800	92%
Winchester StaBALL HD	96.7	2,920	99.4	2,990	102.1	3,065	104.7	3,130	107.4	3,205	63,800	95%
IMR 7977	92.9	2,900	95.5	2,970	98.1	3,040	100.6	3,105	103.2	3,180	63,800	98%
Reload Swiss RS76	95.5	2,905	98.2	2,975	100.8	3,040	103.4	3,110	106.1	3,180	63,800	93%
Alliant Reloder 33	99.8	2,880	102.6	2,950	105.3	3,020	108.1	3,095	110.9	3,170	61,600	105%
Reload Swiss RS62	84.0	2,910	86.3	2,970	88.7	3,040	91.0	3,105	93.3	3,170	63,800	85%
IMR 4831	83.9	2,900	86.2	2,965	88.6	3,030	90.9	3,095	93.2	3,160	63,800	87%
Vihtavuori 24N41	98.0	2,845	100.7	2,920	103.5	2,990	106.2	3,065	108.9	3,140	63,700	97%
IMR 7828	85.3	2,815	87.7	2,880	90.0	2,940	92.4	3,005	94.8	3,070	63,800	83%

220 gr Bullet · 25" barrel

COAL: 3.600" • Bullet length: 1.512" • Seat depth: 0.825" • Usable capacity: 113.6 / 128.3 gr H_2O

Powder	STEP 1 · 90%		STEP 2		STEP 3		STEP 4		STEP 5 · LIMIT			
	gr	fps	gr	fps	gr	fps	gr	fps	gr	fps	psi	Fill
Vihtavuori N568	94.8	2,860	97.4	2,930	100.0	3,000	102.7	3,075	105.3	3,150	63,700	96%
Accurate MagPro	93.1	2,865	95.7	2,935	98.3	3,005	100.8	3,070	103.4	3,140	63,700	93%
Ramshot LRT	101.5	2,840	104.3	2,915	107.2	2,990	110.0	3,060	112.8	3,135	63,700	101%
Ramshot Magnum	94.6	2,845	97.2	2,915	99.8	2,980	102.5	3,055	105.1	3,125	63,700	93%
Ramshot Grand	93.4	2,845	96.0	2,910	98.6	2,980	101.2	3,050	103.8	3,120	63,800	93%
IMR 8133	95.7	2,835	98.3	2,905	101.0	2,975	103.7	3,045	106.3	3,115	63,800	97%
Hodgdon Retumbo	93.3	2,835	95.9	2,905	98.5	2,970	101.1	3,040	103.7	3,105	63,700	95%
Hodgdon H50BMG	102.8	2,810	105.7	2,885	108.5	2,955	111.3	3,025	114.2	3,100	63,700	102%
Alliant Reloder 25	90.2	2,805	92.7	2,870	95.2	2,935	97.7	3,000	100.2	3,070	63,700	96%
Alliant Reloder 26	86.7	2,805	89.1	2,870	91.5	2,935	93.9	3,000	96.3	3,065	63,800	85%
Hodgdon H1000	90.8	2,800	93.3	2,865	95.8	2,930	98.4	2,995	100.9	3,065	63,700	96%
Alliant Reloder 33	98.0	2,780	100.7	2,845	103.5	2,915	106.2	2,985	108.9	3,060	63,700	104%
Vihtavuori N570	88.7	2,790	91.2	2,855	93.6	2,915	96.0	2,980	98.5	3,045	63,800	89%
Winchester StaBALL HD	93.4	2,775	96.0	2,840	98.6	2,910	101.2	2,975	103.8	3,045	63,700	93%
IMR 7977	90.0	2,760	92.5	2,825	95.0	2,890	97.5	2,955	100.0	3,025	63,700	96%
Reload Swiss RS76	92.4	2,760	95.0	2,825	97.6	2,890	100.1	2,950	102.7	3,020	63,700	91%
Vihtavuori 24N41	95.1	2,735	97.8	2,800	100.4	2,870	103.0	2,940	105.7	3,010	63,800	95%
Reload Swiss RS62	81.1	2,760	83.3	2,820	85.6	2,880	87.8	2,940	90.1	3,005	63,700	82%
Reload Swiss RS70	83.1	2,745	85.4	2,805	87.7	2,870	90.0	2,930	92.3	2,990	63,800	82%
IMR 4955	82.4	2,745	84.7	2,805	87.0	2,865	89.2	2,925	91.5	2,985	63,600	81%

230 gr Bullet · 25" barrel

COAL: 3.648" • Bullet length: 1.639" • Seat depth: 0.904" • Usable capacity: 112.3 / 128.3 gr H_2O

Powder	STEP 1 · 90%		STEP 2		STEP 3		STEP 4		STEP 5 · LIMIT			
	gr	fps	gr	fps	gr	fps	gr	fps	gr	fps	psi	Fill
Hodgdon US 869	103.1	2,785	106.0	2,860	108.8	2,930	111.7	3,010	114.6	3,090	60,400	105%
Vihtavuori N568	93.2	2,810	95.8	2,875	98.3	2,945	100.9	3,015	103.5	3,085	63,800	95%
Accurate MagPro	91.5	2,800	94.0	2,870	96.6	2,935	99.2	3,005	101.7	3,075	63,700	92%
Ramshot LRT	99.8	2,780	102.6	2,850	105.3	2,920	108.1	2,995	110.9	3,065	63,700	101%
Ramshot Magnum	92.9	2,785	95.5	2,850	98.1	2,920	100.6	2,985	103.2	3,055	63,700	92%
IMR 8133	94.1	2,775	96.7	2,845	99.3	2,910	101.9	2,980	104.5	3,050	63,700	97%
Ramshot Grand	91.8	2,780	94.3	2,845	96.9	2,910	99.5	2,980	102.0	3,045	63,800	92%
Hodgdon H50BMG	101.0	2,750	103.8	2,820	106.6	2,890	109.4	2,960	112.2	3,030	63,800	102%
Hodgdon Retumbo	91.4	2,765	94.0	2,830	96.5	2,895	99.0	2,960	101.6	3,030	63,700	94%
Alliant Reloder 25	88.6	2,740	91.0	2,805	93.5	2,870	96.0	2,935	98.4	3,000	63,700	96%
Alliant Reloder 26	85.0	2,740	87.3	2,800	89.7	2,865	92.1	2,925	94.4	2,990	63,800	84%
Alliant Reloder 33	96.3	2,715	99.0	2,785	101.7	2,850	104.3	2,920	107.0	2,990	63,700	103%
Hodgdon H1000	89.1	2,735	91.6	2,800	94.0	2,860	96.5	2,925	99.0	2,990	63,700	96%
Winchester StaBALL HD	91.5	2,705	94.0	2,770	96.6	2,835	99.2	2,900	101.7	2,965	63,600	92%
IMR 7977	88.4	2,700	90.9	2,765	93.3	2,825	95.8	2,890	98.2	2,955	63,700	95%
Hodgdon Hybrid 100V	78.4	2,715	80.6	2,775	82.8	2,835	84.9	2,890	87.1	2,950	63,700	87%
Reload Swiss RS76	90.7	2,690	93.2	2,755	95.8	2,820	98.3	2,880	100.8	2,945	63,700	90%
Vihtavuori 24N41	93.4	2,680	96.0	2,745	98.6	2,810	101.2	2,880	103.8	2,945	63,800	94%
IMR 4831	79.8	2,690	82.0	2,750	84.3	2,815	86.5	2,875	88.7	2,930	63,700	85%
Alliant Reloder 22	81.4	2,680	83.7	2,740	85.9	2,795	88.2	2,855	90.4	2,915	63,800	85%

.30-40 Krag

The .30-40 Krag is also known as the .30 Army. The United States Army adopted it in 1892 for the Krag–Jørgensen rifle. It was the first U.S. Army cartridge designed from the outset for smokeless powder. The rimmed and bottlenecked case was standardized in 1894. The load used a 220-grain metal-jacketed round-nose bullet over 40 grains of smokeless powder. This gave a velocity of about 2,000 fps from the Krag's 30-inch barrel. The name reflects this original .30-caliber bullet and 40-grain powder charge.

The cartridge served in the Spanish–American War. In military service it was replaced by the .30-03 and then the .30-06 Springfield. It also became a popular hunting cartridge. Winchester chambered it in the Model 1895 lever-action rifle beginning in 1896. The cartridge was later chambered in a variety of other sporting firearms. Ammunition remains in production. The .30-40 is still used for deer and similar game. Shooters often use surplus Krag rifles and older sporting arms for this.

Cartridge specifications	
Bullet Diameter	**0.308" (7.82 mm)**
Max Case Length	**2.314" (58.78 mm)**
Case Trim Length	**2.304" (58.53 mm)**
Max COAL	**3.089" (78.46 mm)**
Primer Pocket	**Large Rifle**
Standard Twist	**1:10"**
Case Capacity	**58.6 gr H_2O**
Max Pressure	**3,250 bar / 47,137 psi (C.I.P.)**

110 gr Bullet · 25" barrel

COAL: 2.686" • Bullet length: 0.680" • Seat depth: 0.308" • Usable capacity: 53.3 / 58.6 gr H_2O

Powder	STEP 1 · 90%		STEP 2		STEP 3		STEP 4		STEP 5 · LIMIT			
	gr	fps	gr	fps	gr	fps	gr	fps	gr	fps	psi	Fill
Hodgdon Leverevolution	47.5	2,960	48.8	3,030	50.1	3,095	51.5	3,170	52.8	3,240	46,900	95%
Accurate 2520	46.4	2,940	47.7	3,005	49.0	3,070	50.2	3,135	51.5	3,200	47,000	99%
Hodgdon CFE BLK	39.9	2,955	41.0	3,015	42.1	3,080	43.2	3,140	44.3	3,200	47,100	86%
Alliant AR-Comp	43.5	2,930	44.7	2,990	45.9	3,055	47.1	3,120	48.3	3,180	47,100	97%
IMR 4895	46.4	2,905	47.7	2,970	49.0	3,040	50.3	3,105	51.6	3,175	47,100	100%
Vihtavuori N135	44.7	2,915	46.0	2,985	47.2	3,045	48.5	3,115	49.7	3,175	47,000	101%
Vihtavuori N530	43.0	2,910	44.2	2,975	45.4	3,040	46.6	3,105	47.8	3,170	47,100	96%
Alliant Reloder 15	47.2	2,860	48.5	2,925	49.8	2,995	51.1	3,060	52.4	3,130	44,700	105%
Hodgdon H4895	44.4	2,870	45.6	2,935	46.8	2,995	48.1	3,065	49.3	3,130	47,100	96%
Hodgdon BL-C(2)	47.2	2,845	48.5	2,915	49.8	2,980	51.1	3,050	52.4	3,120	47,000	99%
Winchester 748	47.3	2,840	48.6	2,910	49.9	2,980	51.2	3,045	52.5	3,115	47,100	101%
Hodgdon Benchmark	42.7	2,855	43.9	2,920	45.0	2,975	46.2	3,040	47.4	3,105	47,000	98%
Alliant Power Pro Varmint	44.5	2,835	45.7	2,900	47.0	2,965	48.2	3,030	49.4	3,095	47,000	98%
Reload Swiss RS50	46.9	2,825	48.2	2,890	49.5	2,955	50.8	3,025	52.1	3,090	47,000	103%
Hodgdon Varget	45.5	2,815	46.8	2,885	48.0	2,950	49.3	3,020	50.5	3,080	47,000	98%
IMR 3031	42.1	2,820	43.3	2,885	44.5	2,950	45.6	3,010	46.8	3,075	47,000	94%
Ramshot Big Game	49.4	2,790	50.8	2,860	52.1	2,925	53.5	2,995	54.9	3,070	45,300	105%
IMR 4320	45.0	2,775	46.3	2,845	47.5	2,910	48.8	2,980	50.0	3,045	46,900	94%
Hodgdon H322	40.3	2,795	41.4	2,855	42.5	2,915	43.7	2,980	44.8	3,040	47,000	89%
Shooters World Precision Rifle	45.4	2,775	46.6	2,840	47.9	2,910	49.1	2,970	50.4	3,040	47,000	105%

130 gr Bullet · 25" barrel

COAL: 2.865" • Bullet length: 0.880" • Seat depth: 0.329" • Usable capacity: 52.8 / 58.6 gr H_2O

Powder	STEP 1 · 90%		STEP 2		STEP 3		STEP 4		STEP 5 · LIMIT			
	gr	fps	gr	fps	gr	fps	gr	fps	gr	fps	psi	Fill
Hodgdon Leverevolution	45.5	2,760	46.8	2,825	48.0	2,885	49.3	2,950	50.6	3,015	47,000	92%
Vihtavuori N540	45.7	2,745	47.0	2,810	48.3	2,875	49.5	2,930	50.8	2,995	47,000	102%
Accurate 2520	44.2	2,715	45.4	2,770	46.7	2,835	47.9	2,895	49.1	2,955	47,100	96%
Alliant Reloder 15	45.5	2,705	46.8	2,770	48.0	2,830	49.3	2,890	50.6	2,955	47,100	102%
IMR 4895	44.2	2,705	45.4	2,765	46.7	2,830	47.9	2,890	49.1	2,950	47,100	96%
Hodgdon CFE 223	46.3	2,695	47.6	2,755	48.8	2,815	50.1	2,880	51.4	2,945	47,000	99%
Reload Swiss RS52	45.1	2,680	46.4	2,745	47.6	2,805	48.9	2,870	50.1	2,930	47,100	100%
Ramshot Big Game	48.2	2,665	49.5	2,725	50.9	2,795	52.2	2,855	53.5	2,920	46,900	103%
Norma 202	42.8	2,665	44.0	2,725	45.2	2,785	46.4	2,845	47.6	2,900	47,000	98%
Alliant AR-Comp	41.0	2,670	42.1	2,725	43.3	2,785	44.4	2,840	45.5	2,895	47,000	92%
Hodgdon H4895	42.2	2,660	43.4	2,720	44.5	2,775	45.7	2,835	46.9	2,895	46,900	92%
Winchester StaBALL 6.5	49.4	2,630	50.8	2,695	52.1	2,755	53.5	2,825	54.9	2,895	44,800	105%
Ramshot TAC	42.0	2,655	43.2	2,715	44.4	2,775	45.5	2,830	46.7	2,890	47,000	94%
Alliant Power Pro Varmint	42.5	2,635	43.7	2,690	44.9	2,750	46.0	2,805	47.2	2,865	47,000	94%
Shooters World The Creed	44.0	2,615	45.2	2,675	46.5	2,740	47.7	2,800	48.9	2,860	47,100	96%
IMR 4320	43.3	2,605	44.5	2,670	45.7	2,730	46.9	2,790	48.1	2,850	47,000	92%
Hodgdon H414	47.8	2,575	49.1	2,635	50.5	2,705	51.8	2,770	53.1	2,830	46,900	102%
Hodgdon H335	41.1	2,595	42.3	2,655	43.4	2,710	44.6	2,770	45.7	2,825	47,100	86%
Hodgdon H4350	49.4	2,540	50.8	2,610	52.1	2,670	53.5	2,740	54.9	2,810	45,800	105%
Hodgdon H322	38.4	2,575	39.5	2,630	40.5	2,685	41.6	2,740	42.7	2,800	47,000	86%

150 gr Bullet · 25" barrel

COAL: 2.905" • Bullet length: 1.122" • Seat depth: 0.531" • Usable capacity: 49.2 / 58.6 gr H_2O

Powder	STEP 1 · 90%		STEP 2		STEP 3		STEP 4		STEP 5 · LIMIT			
	gr	fps	gr	fps	gr	fps	gr	fps	gr	fps	psi	Fill
Hodgdon Leverevolution	42.2	2,540	43.4	2,600	44.5	2,655	45.7	2,715	46.9	2,775	47,100	91%
Vihtavuori N540	41.9	2,510	43.1	2,565	44.3	2,625	45.4	2,675	46.6	2,735	47,100	101%
IMR 4064	41.5	2,500	42.6	2,555	43.8	2,610	45.0	2,670	46.1	2,725	47,100	100%
Alliant Reloder 15	41.8	2,485	42.9	2,540	44.1	2,600	45.3	2,655	46.4	2,710	46,900	101%
Hodgdon CFE 223	42.8	2,475	44.0	2,535	45.2	2,595	46.4	2,655	47.6	2,710	47,000	99%
IMR 4895	40.7	2,485	41.8	2,540	43.0	2,595	44.1	2,650	45.2	2,705	47,100	95%
Ramshot Big Game	44.7	2,465	46.0	2,530	47.2	2,585	48.5	2,650	49.7	2,705	47,000	103%
Reload Swiss RS52	41.8	2,475	42.9	2,530	44.1	2,590	45.3	2,650	46.4	2,705	46,900	99%
Accurate 2520	40.8	2,485	41.9	2,535	43.0	2,590	44.2	2,650	45.3	2,700	47,100	95%
Winchester 748	42.0	2,465	43.2	2,520	44.4	2,580	45.5	2,635	46.7	2,695	47,000	98%
Vihtavuori N140	41.0	2,460	42.1	2,515	43.3	2,570	44.5	2,630	45.6	2,685	47,000	95%
Hodgdon H380	43.7	2,435	44.9	2,490	46.2	2,555	47.4	2,610	48.6	2,670	46,600	105%
Vihtavuori N150	41.4	2,440	42.5	2,495	43.7	2,555	44.9	2,615	46.0	2,665	45,800	105%
Hodgdon Varget	40.1	2,435	41.2	2,490	42.4	2,550	43.5	2,605	44.6	2,660	47,000	94%
Accurate 4064	40.9	2,430	42.0	2,485	43.1	2,540	44.3	2,600	45.4	2,655	47,000	102%
Shooters World The Creed	40.6	2,410	41.7	2,465	42.9	2,525	44.0	2,580	45.1	2,635	46,900	95%
Hodgdon H414	44.4	2,395	45.6	2,450	46.8	2,510	48.1	2,575	49.3	2,630	46,900	102%
IMR 4320	40.1	2,405	41.2	2,460	42.4	2,520	43.5	2,575	44.6	2,630	47,000	91%
Winchester 760	44.6	2,395	45.8	2,450	47.0	2,510	48.3	2,570	49.5	2,630	46,900	103%
IMR 3031	37.0	2,395	38.0	2,445	39.0	2,495	40.1	2,550	41.1	2,600	47,000	89%

165 gr Bullet · 25" barrel

COAL: 3.025" • Bullet length: 1.253" • Seat depth: 0.542" • Usable capacity: 48.9 / 58.6 gr H_2O

Powder	STEP 1 · 90%		STEP 2		STEP 3		STEP 4		STEP 5 · LIMIT			
	gr	fps	gr	fps	gr	fps	gr	fps	gr	fps	psi	Fill
Hodgdon Leverevolution	41.0	2,420	42.1	2,475	43.3	2,530	44.4	2,585	45.5	2,640	47,000	89%
Vihtavuori N550	43.9	2,415	45.1	2,470	46.3	2,525	47.6	2,585	48.8	2,640	45,900	105%
Winchester StaBALL 6.5	45.6	2,385	46.9	2,445	48.2	2,505	49.4	2,560	50.7	2,620	47,000	104%
Ramshot Big Game	43.6	2,365	44.8	2,420	46.0	2,475	47.2	2,535	48.4	2,590	47,000	101%
Hodgdon CFE 223	41.7	2,365	42.9	2,425	44.0	2,475	45.1	2,530	46.3	2,585	46,900	96%
IMR 4064	40.1	2,375	41.2	2,430	42.3	2,480	43.4	2,535	44.5	2,585	47,000	97%
Reload Swiss RS52	40.7	2,365	41.8	2,420	43.0	2,475	44.1	2,530	45.2	2,585	46,900	97%
Alliant Power Pro 2000-MR	42.4	2,350	43.6	2,410	44.8	2,465	45.9	2,520	47.1	2,575	47,000	101%
Vihtavuori N540	40.2	2,365	41.3	2,415	42.5	2,475	43.6	2,525	44.7	2,575	47,000	97%
Alliant Reloder 15	40.2	2,355	41.3	2,410	42.5	2,465	43.6	2,515	44.7	2,570	46,900	98%
Hodgdon H4350	44.9	2,330	46.1	2,390	47.4	2,450	48.6	2,505	49.9	2,570	46,900	103%
IMR 4895	39.2	2,350	40.3	2,405	41.4	2,460	42.5	2,510	43.6	2,565	47,000	92%
Hodgdon H380	42.7	2,340	43.9	2,395	45.0	2,445	46.2	2,505	47.4	2,560	46,900	103%
Vihtavuori N150	40.5	2,350	41.6	2,400	42.8	2,455	43.9	2,510	45.0	2,560	47,000	103%
Hodgdon SUPERFORMANCE	47.2	2,315	48.5	2,375	49.8	2,435	51.1	2,495	52.4	2,555	46,900	105%
Vihtavuori N140	39.6	2,335	40.7	2,385	41.8	2,440	42.9	2,490	44.0	2,545	46,900	92%
Winchester 760	43.6	2,310	44.8	2,365	46.0	2,420	47.2	2,475	48.4	2,535	47,100	102%
Reload Swiss RS50	40.6	2,310	41.7	2,365	42.9	2,420	44.0	2,470	45.1	2,525	46,900	97%
IMR 4320	39.2	2,305	40.3	2,355	41.4	2,410	42.4	2,460	43.5	2,515	47,000	89%
IMR 3031	35.8	2,265	36.8	2,315	37.8	2,365	38.8	2,415	39.8	2,465	47,000	87%

180 gr Bullet · 25" barrel

COAL: 3.025" • Bullet length: 1.274" • Seat depth: 0.563" • Usable capacity: 48.6 / 58.6 gr H_2O

Powder	STEP 1 · 90%		STEP 2		STEP 3		STEP 4		STEP 5 · LIMIT			
	gr	fps	gr	fps	gr	fps	gr	fps	gr	fps	psi	Fill
Vihtavuori N550	42.6	2,315	43.8	2,365	45.0	2,420	46.1	2,465	47.3	2,520	47,000	102%
Winchester StaBALL 6.5	44.6	2,300	45.8	2,355	47.0	2,405	48.3	2,465	49.5	2,520	47,000	103%
Hodgdon Leverevolution	39.8	2,305	40.9	2,360	42.0	2,410	43.1	2,465	44.2	2,515	47,000	87%
Hodgdon SUPERFORMANCE	46.2	2,250	47.5	2,310	48.8	2,370	50.0	2,425	51.3	2,485	46,900	103%
Ramshot Big Game	42.5	2,270	43.7	2,325	44.9	2,380	46.0	2,430	47.2	2,485	47,100	99%
Hodgdon H4350	43.7	2,255	44.9	2,310	46.1	2,365	47.3	2,420	48.5	2,475	46,900	101%
Reload Swiss RS52	39.7	2,270	40.8	2,320	41.9	2,375	43.0	2,425	44.1	2,475	47,100	95%
Alliant Power Pro 2000-MR	41.3	2,255	42.4	2,310	43.6	2,365	44.8	2,420	45.9	2,470	47,000	99%
Hodgdon CFE 223	40.5	2,260	41.6	2,310	42.8	2,365	43.9	2,415	45.0	2,465	46,900	94%
IMR 4064	38.8	2,265	39.9	2,315	41.0	2,370	42.0	2,415	43.1	2,465	47,100	95%
Hodgdon H380	41.5	2,245	42.6	2,295	43.8	2,350	45.0	2,400	46.1	2,455	46,900	101%
Vihtavuori N150	39.2	2,240	40.3	2,290	41.4	2,340	42.4	2,390	43.5	2,440	47,100	100%
Vihtavuori N540	38.7	2,240	39.8	2,290	40.9	2,340	41.9	2,385	43.0	2,435	47,000	94%
IMR 4895	37.8	2,235	38.8	2,280	39.9	2,335	41.0	2,385	42.0	2,430	46,900	89%
Alliant Power Pro 4000-MR	44.6	2,200	45.8	2,255	47.0	2,310	48.3	2,365	49.5	2,420	46,900	104%
IMR 4320	38.2	2,205	39.3	2,260	40.3	2,305	41.4	2,360	42.4	2,405	47,000	88%
IMR 4955	45.0	2,170	46.3	2,230	47.5	2,285	48.8	2,345	50.0	2,400	47,000	104%
IMR 4007 SSC	41.9	2,180	43.0	2,230	44.2	2,290	45.4	2,345	46.5	2,395	46,900	102%
Hodgdon H4895	36.5	2,200	37.5	2,250	38.5	2,295	39.5	2,345	40.5	2,390	47,100	86%
IMR 3031	34.7	2,155	35.7	2,205	36.7	2,255	37.6	2,295	38.6	2,345	47,100	85%

200 gr Bullet · 25" barrel

COAL: 3.089" • Bullet length: 1.397" • Seat depth: 0.622" • Usable capacity: 47.7 / 58.6 gr H_2O

Powder	STEP 1 · 90%		STEP 2		STEP 3		STEP 4		STEP 5 · LIMIT			
	gr	fps	gr	fps	gr	fps	gr	fps	gr	fps	psi	Fill
Winchester StaBALL 6.5	42.8	2,170	44.0	2,225	45.2	2,275	46.4	2,330	47.6	2,380	46,900	101%
Accurate 4350	43.0	2,160	44.2	2,215	45.4	2,265	46.6	2,320	47.8	2,375	46,300	105%
Hodgdon SUPERFORMANCE	44.6	2,155	45.9	2,210	47.1	2,265	48.4	2,320	49.6	2,375	47,100	102%
Hodgdon Leverevolution	38.1	2,165	39.1	2,210	40.2	2,260	41.3	2,310	42.3	2,360	47,000	85%
Hodgdon H4350	41.9	2,145	43.0	2,195	44.2	2,250	45.4	2,300	46.5	2,350	47,100	98%
Vihtavuori N550	40.2	2,155	41.3	2,200	42.5	2,255	43.6	2,300	44.7	2,350	47,000	99%
IMR 4350	41.9	2,135	43.1	2,190	44.3	2,240	45.4	2,290	46.6	2,345	46,500	105%
Ramshot Big Game	40.8	2,145	41.9	2,195	43.0	2,240	44.2	2,295	45.3	2,345	47,000	97%
Alliant Reloder 16	40.6	2,130	41.7	2,175	42.9	2,230	44.0	2,275	45.1	2,325	45,700	105%
Reload Swiss RS62	43.3	2,105	44.5	2,155	45.7	2,210	46.9	2,265	48.1	2,320	46,800	105%
Hodgdon H380	39.8	2,115	40.9	2,165	42.0	2,215	43.1	2,260	44.2	2,310	47,000	98%
Winchester 760	40.9	2,110	42.0	2,155	43.1	2,205	44.3	2,260	45.4	2,310	47,000	98%
Alliant Power Pro 4000-MR	43.0	2,095	44.2	2,150	45.4	2,200	46.6	2,255	47.8	2,305	47,000	102%
IMR 4064	36.9	2,120	37.9	2,165	39.0	2,215	40.0	2,260	41.0	2,305	47,000	92%
Hodgdon H4831SC	44.6	2,085	45.8	2,135	47.0	2,185	48.3	2,245	49.5	2,295	47,000	104%
Vihtavuori N150	37.2	2,095	38.2	2,140	39.3	2,190	40.3	2,235	41.3	2,280	47,000	97%
IMR 4895	35.9	2,085	36.9	2,130	37.9	2,175	38.9	2,225	39.9	2,270	46,900	86%
Winchester StaBALL Match	37.4	2,085	38.4	2,130	39.5	2,180	40.5	2,225	41.5	2,270	46,900	98%
IMR 4320	36.7	2,075	37.7	2,125	38.8	2,175	39.8	2,220	40.8	2,265	47,100	86%
IMR 4831	41.9	2,040	43.1	2,095	44.3	2,150	45.4	2,200	46.6	2,255	44,900	105%

220 gr Bullet · 25" barrel

COAL: 3.000" • Bullet length: 1.303" • Seat depth: 0.617" • Usable capacity: 47.8 / 58.6 gr H_2O

Powder	STEP 1 · 90%		STEP 2		STEP 3		STEP 4		STEP 5 · LIMIT			
	gr	fps	gr	fps	gr	fps	gr	fps	gr	fps	psi	Fill
Accurate 4350	42.2	2,080	43.4	2,130	44.5	2,175	45.7	2,230	46.9	2,280	46,900	103%
Hodgdon SUPERFORMANCE	43.7	2,075	44.9	2,125	46.1	2,180	47.3	2,230	48.5	2,280	47,000	99%
Winchester StaBALL 6.5	41.8	2,070	42.9	2,115	44.1	2,165	45.3	2,220	46.4	2,265	47,000	98%
Norma URP	40.5	2,045	41.6	2,095	42.8	2,150	43.9	2,200	45.0	2,245	46,900	103%
IMR 4350	41.0	2,050	42.1	2,095	43.3	2,150	44.4	2,195	45.5	2,240	47,100	102%
Ramshot Hunter	42.3	2,040	43.5	2,090	44.6	2,135	45.8	2,185	47.0	2,240	47,100	105%
Reload Swiss RS62	42.5	2,035	43.7	2,085	44.9	2,135	46.0	2,185	47.2	2,235	47,100	103%
Reload Swiss RS70	43.6	2,030	44.8	2,080	46.0	2,130	47.2	2,185	48.4	2,235	47,100	102%
Norma 204	41.4	2,025	42.5	2,070	43.7	2,125	44.9	2,175	46.0	2,225	47,000	101%
Alliant Power Pro 4000-MR	42.1	2,010	43.3	2,065	44.5	2,115	45.6	2,160	46.8	2,210	47,000	100%
IMR 4831	41.9	2,010	43.0	2,055	44.2	2,110	45.4	2,160	46.5	2,210	47,000	105%
Accurate 2700	39.6	2,015	40.7	2,060	41.8	2,110	42.9	2,155	44.0	2,205	47,100	94%
Vihtavuori N160	41.6	2,010	42.8	2,060	43.9	2,105	45.1	2,155	46.2	2,200	46,800	105%
Winchester 760	39.9	2,010	41.0	2,060	42.1	2,105	43.2	2,155	44.3	2,200	47,100	95%
Winchester Supreme 780	44.8	1,985	46.0	2,035	47.3	2,085	48.5	2,135	49.8	2,190	45,800	105%
Hodgdon H380	38.5	2,000	39.6	2,045	40.6	2,090	41.7	2,135	42.8	2,185	46,900	95%
IMR 4064	35.6	1,995	36.6	2,035	37.6	2,080	38.6	2,125	39.6	2,170	47,000	89%
IMR 4451	39.6	1,975	40.7	2,025	41.8	2,070	42.9	2,120	44.0	2,170	47,100	96%
IMR 4320	35.7	1,965	36.7	2,010	37.7	2,055	38.7	2,100	39.7	2,145	46,900	84%
IMR 4895	34.6	1,955	35.5	2,000	36.5	2,045	37.5	2,090	38.4	2,130	47,100	83%

300 Blackout

Advanced Armament Corporation (AAC) worked with Remington Defense to develop the 300 AAC Blackout in 2009 and 2010. The goal was a .30-caliber cartridge for the AR-15 that would approach 7.62x39mm ballistics, use standard magazines and perform well with a suppressor. The case is formed by shortening the .223 Remington case and necking it up to .308 caliber. As a result the standard AR-15 bolt and magazines can be retained. A rifle can be converted by changing the barrel. SAAMI approved the cartridge in January 2011.

The 300 Blackout is loaded in two distinct forms. Supersonic loads commonly use bullets of about 110 to 125 grains at roughly 2,200 to 2,400 fps. Subsonic loads typically use bullets near 220 grains at about 1,000 fps for quiet suppressed use. Special operations units in several countries have adopted it. These include U.S. Special Operations Command with the SIG MCX Rattler. Civilian shooters use it for short-range hunting of deer and hogs and for suppressed shooting. Ammunition is widely available from major manufacturers.

Cartridge specifications	
Bullet Diameter	**0.308" (7.82 mm)**
Max Case Length	**1.368" (34.75 mm)**
Case Trim Length	**1.358" (34.50 mm)**
Max COAL	**2.260" (57.40 mm)**
Primer Pocket	**Small Rifle**
Standard Twist	**1:7"**
Case Capacity	**25.5 gr H_2O**
Max Pressure	**55,000 psi (SAAMI)**

110 gr Bullet · 25" barrel

COAL: 1.790" • Bullet length: 0.811" • Seat depth: 0.389" • Usable capacity: 18.6 / 25.5 gr H_2O

Powder	STEP 1 · 90%		STEP 2		STEP 3		STEP 4		STEP 5 · LIMIT			
	gr	fps	gr	fps	gr	fps	gr	fps	gr	fps	psi	Fill
Accurate No. 11FS	16.9	2,175	17.4	2,235	17.9	2,290	18.3	2,335	18.8	2,390	54,400	102%
Hodgdon H110	16.7	2,180	17.1	2,225	17.6	2,280	18.1	2,335	18.5	2,380	54,400	102%
Accurate 4100	15.6	2,155	16.0	2,200	16.4	2,245	16.9	2,305	17.3	2,350	54,300	98%
Norma R123	15.3	2,140	15.7	2,185	16.1	2,235	16.6	2,295	17.0	2,340	54,900	99%
Vihtavuori N110	14.8	2,095	15.2	2,145	15.6	2,190	16.0	2,240	16.4	2,285	54,400	104%
Accurate No. 9	14.0	2,055	14.4	2,110	14.8	2,165	15.1	2,200	15.5	2,255	54,300	86%
Alliant 2400	14.0	2,035	14.4	2,080	14.8	2,130	15.2	2,180	15.6	2,225	54,700	92%

125 gr Bullet · 25" barrel

COAL: 2.030" • Bullet length: 1.072" • Seat depth: 0.410" • Usable capacity: 18.1 / 25.5 gr H_2O

Powder	STEP 1 · 90%		STEP 2		STEP 3		STEP 4		STEP 5 · LIMIT			
	gr	fps	gr	fps	gr	fps	gr	fps	gr	fps	psi	Fill
Accurate No. 11FS	16.1	2,035	16.6	2,090	17.0	2,135	17.4	2,175	17.9	2,230	54,500	100%
Hodgdon H110	15.8	2,010	16.3	2,065	16.7	2,110	17.2	2,165	17.6	2,210	54,400	100%
Norma R123	14.5	1,980	14.9	2,030	15.3	2,075	15.7	2,125	16.1	2,170	54,600	96%
Accurate 4100	14.9	1,990	15.3	2,035	15.7	2,080	16.1	2,120	16.5	2,165	54,900	96%
Vihtavuori N110	14.0	1,930	14.4	1,975	14.8	2,020	15.2	2,070	15.6	2,115	55,000	101%
Accurate No. 9	13.2	1,905	13.6	1,955	13.9	1,995	14.3	2,045	14.7	2,095	54,300	84%
Hodgdon H4227	14.9	1,885	15.3	1,930	15.7	1,970	16.1	2,015	16.5	2,060	51,600	105%
Alliant 2400	13.3	1,870	13.7	1,920	14.1	1,965	14.4	2,000	14.8	2,045	55,000	90%

135 gr Bullet · 25" barrel

COAL: 2.030" • Bullet length: 0.999" • Seat depth: 0.337" • Usable capacity: 19.6 / 25.5 gr H_2O

Powder	STEP 1 · 90%		STEP 2		STEP 3		STEP 4		STEP 5 · LIMIT			
	gr	fps	gr	fps	gr	fps	gr	fps	gr	fps	psi	Fill
Hodgdon Lil'Gun	16.5	2,065	16.9	2,105	17.4	2,160	17.9	2,210	18.3	2,250	54,800	105%
Accurate No. 11FS	16.6	2,020	17.1	2,075	17.5	2,115	17.9	2,160	18.4	2,210	54,400	95%
Hodgdon H110	16.3	1,990	16.8	2,040	17.2	2,085	17.7	2,135	18.1	2,175	54,300	95%
Norma R123	14.9	1,960	15.3	2,005	15.7	2,050	16.1	2,095	16.5	2,135	54,700	91%
Accurate 4100	15.2	1,930	15.6	1,975	16.0	2,015	16.5	2,065	16.9	2,110	54,600	91%
Hodgdon H4227	15.6	1,885	16.0	1,925	16.4	1,970	16.9	2,020	17.3	2,060	54,300	101%
Vihtavuori N110	14.3	1,885	14.7	1,930	15.1	1,975	15.5	2,015	15.9	2,060	54,500	95%
Alliant 2400	13.6	1,825	14.0	1,870	14.3	1,905	14.7	1,945	15.1	1,990	54,700	85%
Reload Swiss RS30	14.9	1,805	15.3	1,845	15.8	1,900	16.2	1,940	16.6	1,980	54,700	103%

150 gr Bullet · 25" barrel

COAL: 1.900" • Bullet length: 1.120" • Seat depth: 0.588" • Usable capacity: 15.4 / 25.5 gr H_2O

Powder	STEP 1 · 90%		STEP 2		STEP 3		STEP 4		STEP 5 · LIMIT			
	gr	fps	gr	fps	gr	fps	gr	fps	gr	fps	psi	Fill
Accurate No. 11FS	13.9	1,735	14.3	1,780	14.7	1,825	15.0	1,860	15.4	1,905	54,800	101%
Hodgdon H110	13.6	1,705	14.0	1,750	14.3	1,785	14.7	1,830	15.1	1,875	54,400	101%
Norma R123	12.4	1,675	12.8	1,720	13.1	1,760	13.5	1,805	13.8	1,840	54,700	97%
Accurate 4100	12.7	1,675	13.0	1,705	13.4	1,750	13.8	1,795	14.1	1,830	54,700	96%
Accurate No. 9	11.3	1,610	11.6	1,650	11.9	1,690	12.3	1,740	12.6	1,780	54,400	84%
Vihtavuori N110	12.0	1,630	12.3	1,665	12.7	1,715	13.0	1,750	13.3	1,780	54,700	101%
Alliant 2400	11.3	1,570	11.6	1,605	11.9	1,640	12.3	1,685	12.6	1,720	54,400	90%

165 gr Bullet · 25" barrel

COAL: 2.100" • Bullet length: 1.215" • Seat depth: 0.483" • Usable capacity: 16.9 / 25.5 gr H_2O

Powder	STEP 1 · 90%		STEP 2		STEP 3		STEP 4		STEP 5 · LIMIT			
	gr	fps	gr	fps	gr	fps	gr	fps	gr	fps	psi	Fill
Hodgdon Lil'Gun	14.0	1,720	14.4	1,760	14.8	1,800	15.2	1,845	15.6	1,885	54,700	103%
Accurate No. 11FS	14.3	1,705	14.7	1,750	15.1	1,790	15.5	1,835	15.9	1,875	54,800	95%
Hodgdon H110	14.0	1,670	14.4	1,710	14.8	1,755	15.2	1,795	15.6	1,835	54,500	95%
Norma R123	12.8	1,650	13.2	1,690	13.5	1,725	13.8	1,760	14.2	1,800	55,000	91%
Vihtavuori N105	11.3	1,640	11.6	1,675	11.9	1,710	12.2	1,745	12.5	1,780	54,500	81%
Accurate 4100	13.1	1,625	13.4	1,655	13.8	1,695	14.2	1,735	14.5	1,765	54,500	90%
Hodgdon H4227	13.4	1,580	13.8	1,625	14.2	1,665	14.5	1,695	14.9	1,735	54,800	101%
Vihtavuori N110	12.2	1,575	12.5	1,605	12.9	1,650	13.3	1,690	13.6	1,725	54,600	94%
Alliant 2400	11.6	1,520	11.9	1,550	12.3	1,595	12.6	1,630	12.9	1,660	54,500	84%
Reload Swiss RS30	12.8	1,515	13.2	1,555	13.5	1,585	13.8	1,615	14.2	1,655	54,500	102%

180 gr Bullet · 25" barrel

COAL: 2.110" • Bullet length: 1.282" • Seat depth: 0.540" • Usable capacity: 15.9 / 25.5 gr H_2O

Powder	STEP 1 · 90%		STEP 2		STEP 3		STEP 4		STEP 5 · LIMIT			
	gr	fps	gr	fps	gr	fps	gr	fps	gr	fps	psi	Fill
Hodgdon Lil'Gun	13.1	1,590	13.4	1,625	13.8	1,665	14.2	1,705	14.5	1,735	54,300	103%
Accurate No. 11FS	13.3	1,575	13.7	1,615	14.1	1,655	14.4	1,690	14.8	1,730	54,200	94%
Hodgdon H110	13.1	1,545	13.5	1,590	13.8	1,620	14.2	1,660	14.6	1,700	54,600	95%
Norma R123	11.9	1,515	12.2	1,550	12.6	1,595	12.9	1,630	13.2	1,660	54,300	90%
Vihtavuori N105	10.5	1,510	10.8	1,545	11.1	1,580	11.4	1,615	11.7	1,650	55,000	81%
Accurate 4100	12.2	1,495	12.5	1,525	12.9	1,565	13.3	1,610	13.6	1,640	55,000	90%
Hodgdon H4227	12.5	1,460	12.8	1,490	13.2	1,535	13.6	1,575	13.9	1,605	54,600	101%
Vihtavuori N110	11.4	1,455	11.7	1,485	12.1	1,530	12.4	1,560	12.7	1,595	54,700	94%
Reload Swiss RS30	12.0	1,405	12.3	1,435	12.7	1,475	13.0	1,505	13.3	1,535	54,900	102%
Alliant 2400	10.8	1,400	11.1	1,430	11.4	1,465	11.7	1,495	12.0	1,530	54,100	83%

190 gr Bullet · 25" barrel

COAL: 2.185" • Bullet length: 1.341" • Seat depth: 0.524" • Usable capacity: 16.3 / 25.5 gr H_2O

Powder	STEP 1 · 90%		STEP 2		STEP 3		STEP 4		STEP 5 · LIMIT			
	gr	fps	gr	fps	gr	fps	gr	fps	gr	fps	psi	Fill
Accurate No. 11FS	13.3	1,535	13.7	1,580	14.1	1,620	14.4	1,650	14.8	1,690	54,600	92%
Hodgdon H110	13.1	1,510	13.5	1,550	13.8	1,580	14.2	1,620	14.6	1,660	55,000	92%
Norma R123	11.9	1,480	12.2	1,515	12.6	1,555	12.9	1,590	13.2	1,620	54,900	88%
Accurate 4100	12.2	1,450	12.5	1,480	12.8	1,510	13.2	1,550	13.5	1,580	54,500	87%
Hodgdon H4227	12.4	1,415	12.8	1,455	13.1	1,485	13.5	1,520	13.8	1,550	54,300	97%
Vihtavuori N110	11.3	1,405	11.6	1,435	11.9	1,470	12.3	1,510	12.6	1,540	54,500	91%
Alliant 2400	10.8	1,360	11.1	1,390	11.4	1,425	11.7	1,455	12.0	1,485	54,800	81%
Reload Swiss RS30	11.9	1,360	12.2	1,385	12.6	1,425	12.9	1,455	13.2	1,485	54,700	99%

200 gr Bullet · 25" barrel

COAL: 2.160" • Bullet length: 1.401" • Seat depth: 0.609" • Usable capacity: 14.6 / 25.5 gr H_2O

Powder	STEP 1 · 90%		STEP 2		STEP 3		STEP 4		STEP 5 · LIMIT			
	gr	fps	gr	fps	gr	fps	gr	fps	gr	fps	psi	Fill
Accurate No. 11FS	12.3	1,435	12.7	1,475	13.0	1,505	13.3	1,535	13.7	1,580	54,900	95%
Hodgdon Lil'Gun	12.0	1,440	12.3	1,470	12.7	1,510	13.0	1,545	13.3	1,575	54,600	102%
Hodgdon H110	12.1	1,405	12.4	1,440	12.8	1,480	13.1	1,510	13.4	1,540	54,300	94%
Norma R123	10.9	1,370	11.2	1,405	11.5	1,435	11.8	1,470	12.1	1,500	54,100	90%
Vihtavuori N105	9.6	1,360	9.9	1,395	10.1	1,420	10.4	1,455	10.7	1,485	54,800	80%
Accurate 4100	11.2	1,350	11.5	1,380	11.8	1,415	12.1	1,445	12.4	1,475	54,100	89%
Hodgdon H4227	11.5	1,325	11.8	1,355	12.2	1,395	12.5	1,425	12.8	1,455	54,900	101%
Vihtavuori N110	10.4	1,310	10.7	1,340	11.0	1,375	11.3	1,405	11.6	1,435	54,300	93%
Reload Swiss RS30	11.0	1,270	11.3	1,300	11.6	1,330	11.9	1,360	12.2	1,390	54,800	102%
Alliant 2400	9.9	1,260	10.2	1,295	10.4	1,315	10.7	1,350	11.0	1,380	54,000	83%

210 gr Bullet · 25" barrel

COAL: 2.250" • Bullet length: 1.474" • Seat depth: 0.592" • Usable capacity: 14.9 / 25.5 gr H_2O

Powder	STEP 1 · 90%		STEP 2		STEP 3		STEP 4		STEP 5 · LIMIT			
	gr	fps	gr	fps	gr	fps	gr	fps	gr	fps	psi	Fill
Norma R123	10.9	1,340	11.2	1,375	11.5	1,405	11.8	1,435	12.1	1,470	54,800	88%
IMR 4227	12.4	1,315	12.8	1,355	13.1	1,380	13.5	1,420	13.8	1,450	53,900	105%
Accurate 4100	11.2	1,315	11.5	1,345	11.8	1,375	12.1	1,405	12.4	1,435	54,800	87%
Hodgdon H4227	11.4	1,285	11.7	1,315	12.1	1,355	12.4	1,380	12.7	1,410	54,700	98%
Vihtavuori N110	10.4	1,275	10.7	1,310	10.9	1,330	11.2	1,360	11.5	1,390	54,200	91%
Alliant 2400	9.9	1,230	10.2	1,260	10.4	1,285	10.7	1,315	11.0	1,345	54,900	81%
Reload Swiss RS30	10.9	1,230	11.2	1,260	11.5	1,285	11.8	1,315	12.1	1,345	54,800	99%

220 gr Bullet · 25" barrel

COAL: 2.100" • Bullet length: 1.488" • Seat depth: 0.756" • Usable capacity: 11.9 / 25.5 gr H_2O

Powder	STEP 1 · 90%		STEP 2		STEP 3		STEP 4		STEP 5 · LIMIT			
	gr	fps	gr	fps	gr	fps	gr	fps	gr	fps	psi	Fill
Hodgdon H110	10.4	1,230	10.7	1,265	10.9	1,285	11.2	1,320	11.5	1,350	55,000	100%
Norma R123	9.4	1,200	9.7	1,235	9.9	1,255	10.2	1,290	10.4	1,315	54,400	95%
Vihtavuori N105	8.2	1,195	8.4	1,220	8.6	1,240	8.9	1,280	9.1	1,300	54,100	84%
Accurate 4100	9.5	1,175	9.8	1,210	10.1	1,240	10.3	1,260	10.6	1,295	54,100	94%
Accurate No. 9	8.6	1,160	8.8	1,185	9.1	1,225	9.3	1,250	9.5	1,275	54,400	82%
Hodgdon H4227	9.7	1,140	10.0	1,170	10.3	1,205	10.5	1,225	10.8	1,255	53,300	104%
Vihtavuori N110	8.9	1,145	9.2	1,175	9.4	1,200	9.7	1,235	9.9	1,255	54,000	98%
Alliant 2400	8.6	1,120	8.8	1,140	9.1	1,175	9.3	1,200	9.5	1,220	54,900	88%
Reload Swiss RS30	9.2	1,085	9.4	1,105	9.7	1,135	9.9	1,160	10.2	1,190	52,000	105%

230 gr Bullet · 25" barrel

COAL: 2.250" • Bullet length: 1.686" • Seat depth: 0.804" • Usable capacity: 11.0 / 25.5 gr H_2O

Powder	STEP 1 · 90%		STEP 2		STEP 3		STEP 4		STEP 5 · LIMIT			
	gr	fps	gr	fps	gr	fps	gr	fps	gr	fps	psi	Fill
Hodgdon H110	9.7	1,155	10.0	1,185	10.3	1,220	10.5	1,240	10.8	1,275	54,800	101%
Norma R123	8.8	1,125	9.1	1,160	9.3	1,185	9.6	1,220	9.8	1,245	54,600	97%
Vihtavuori N105	7.7	1,130	7.9	1,155	8.2	1,190	8.4	1,215	8.6	1,240	54,600	86%
Accurate 4100	9.0	1,120	9.3	1,150	9.5	1,175	9.8	1,205	10.0	1,230	54,500	96%
Accurate No. 9	8.0	1,080	8.2	1,110	8.4	1,135	8.7	1,170	8.9	1,195	53,900	83%
Vihtavuori N110	8.4	1,085	8.6	1,105	8.9	1,140	9.1	1,165	9.3	1,185	53,800	99%
Hodgdon H4227	9.0	1,065	9.3	1,095	9.5	1,115	9.8	1,150	10.0	1,170	51,400	104%
Alliant 2400	8.0	1,045	8.2	1,070	8.4	1,095	8.7	1,125	8.9	1,150	54,300	89%

.300 H&H Magnum

Holland & Holland of London introduced the .300 Holland & Holland Magnum in 1925. Its original name was “Super-Thirty.” It was created by necking down the belted .375 H&H Magnum case to accept .308-inch bullets. The new cartridge kept the parent’s long and tapered body and its gradual shoulder.

The cartridge gained attention in the United States in 1935. That year Ben Comfort used it to win the 1,000-yard Wimbledon Cup match at Camp Perry. Winchester chambered its Model 70 rifle for the .300 H&H beginning in 1937. Factory loads drove a 180-grain bullet at roughly 2,900 fps. This was faster than the .30-06 Springfield. The .300 H&H never approached the .30-06 in popularity. Even so it is well suited to African plains game and most North American big game. The case also served as the basis for later cartridges. These include the .300 Weatherby Magnum, .270 Weatherby Magnum and .308 Norma Magnum. Ammunition remains available from a limited number of manufacturers.

Cartridge specifications	
Bullet Diameter	**0.308" (7.82 mm)**
Max Case Length	**2.850" (72.39 mm)**
Case Trim Length	**2.840" (72.14 mm)**
Max COAL	**3.600" (91.44 mm)**
Primer Pocket	**Large Rifle**
Standard Twist	**1:10"**
Case Capacity	**86.0 gr H_2O**
Max Pressure	**58,000 psi (SAAMI)**

110 gr Bullet · 25" barrel

COAL: 3.337" • Bullet length: 0.795" • Seat depth: 0.308" • Usable capacity: 80.6 / 86.0 gr H_2O

Powder	STEP 1 · 90%		STEP 2		STEP 3		STEP 4		STEP 5 · LIMIT			
	gr	fps	gr	fps	gr	fps	gr	fps	gr	fps	psi	Fill
IMR 4895	63.4	3,505	65.2	3,580	66.9	3,655	68.7	3,735	70.4	3,810	57,900	90%
Hodgdon H380	68.5	3,465	70.4	3,545	72.3	3,630	74.2	3,710	76.1	3,795	57,900	100%
Accurate 4350	71.4	3,400	73.4	3,490	75.3	3,570	77.3	3,660	79.3	3,750	57,900	103%
Hodgdon Leverevolution	62.3	3,440	64.0	3,515	65.8	3,595	67.5	3,670	69.2	3,745	57,800	82%
IMR 4320	62.9	3,435	64.7	3,515	66.4	3,590	68.2	3,670	69.9	3,745	57,900	87%
IMR 4064	63.0	3,445	64.8	3,520	66.5	3,590	68.3	3,670	70.0	3,740	57,900	93%
Winchester StaBALL 6.5	69.1	3,405	71.0	3,480	72.9	3,560	74.9	3,645	76.8	3,730	57,800	96%
IMR 3031	58.8	3,415	60.4	3,485	62.0	3,555	63.7	3,630	65.3	3,700	57,800	87%
Vihtavuori N550	65.9	3,400	67.7	3,475	69.6	3,550	71.4	3,625	73.2	3,700	57,900	95%
IMR 4350	70.0	3,340	72.0	3,425	73.9	3,510	75.8	3,590	77.8	3,680	57,800	104%
Ramshot Big Game	66.2	3,370	68.0	3,445	69.9	3,525	71.8	3,605	73.6	3,680	57,900	93%
Hodgdon SUPERFORMANCE	72.1	3,320	74.1	3,405	76.1	3,490	78.1	3,580	80.1	3,670	57,900	97%
Alliant Reloder 15	61.7	3,360	63.4	3,435	65.2	3,510	66.9	3,585	68.6	3,655	58,000	91%
Alliant TS 15.5	61.0	3,335	62.7	3,410	64.4	3,485	66.1	3,560	67.8	3,635	57,800	91%
Norma 204	68.9	3,305	70.8	3,385	72.7	3,470	74.6	3,550	76.5	3,635	58,000	100%
Vihtavuori N150	61.7	3,335	63.4	3,410	65.2	3,485	66.9	3,560	68.6	3,630	57,900	95%
Hodgdon H414	66.5	3,300	68.3	3,375	70.2	3,455	72.1	3,535	73.9	3,615	57,900	93%
Hodgdon H4350	68.8	3,275	70.7	3,360	72.6	3,440	74.5	3,525	76.4	3,610	57,900	96%
IMR 4831	70.7	3,255	72.7	3,345	74.6	3,425	76.5	3,510	78.5	3,600	58,000	105%
Alliant Reloder 17	66.0	3,250	67.8	3,330	69.7	3,415	71.5	3,495	73.3	3,575	57,900	91%

125 gr Bullet · 25" barrel

COAL: 3.550" • Bullet length: 1.086" • Seat depth: 0.386" • Usable capacity: 79.0 / 86.0 gr H_2O

Powder	STEP 1 · 90%		STEP 2		STEP 3		STEP 4		STEP 5 · LIMIT			
	gr	fps	gr	fps	gr	fps	gr	fps	gr	fps	psi	Fill
Hodgdon H380	65.8	3,285	67.6	3,355	69.4	3,430	71.3	3,510	73.1	3,585	57,900	98%
Accurate 4350	68.9	3,260	70.8	3,340	72.7	3,420	74.6	3,500	76.5	3,580	57,800	101%
IMR 4895	60.4	3,285	62.1	3,355	63.8	3,430	65.4	3,495	67.1	3,570	57,800	88%
IMR 4320	60.6	3,245	62.3	3,320	64.0	3,390	65.6	3,460	67.3	3,535	57,800	86%
Winchester StaBALL 6.5	66.6	3,235	68.4	3,305	70.3	3,380	72.2	3,460	74.0	3,535	57,900	94%
Hodgdon Leverevolution	59.7	3,235	61.4	3,305	63.0	3,375	64.7	3,450	66.3	3,520	57,800	80%
IMR 4064	60.2	3,245	61.9	3,315	63.6	3,385	65.2	3,450	66.9	3,520	58,000	91%
Hodgdon SUPERFORMANCE	69.7	3,190	71.6	3,270	73.6	3,355	75.5	3,435	77.4	3,515	57,900	96%
IMR 4350	67.3	3,195	69.2	3,275	71.0	3,350	72.9	3,430	74.8	3,510	57,800	102%
Vihtavuori N555	68.9	3,170	70.8	3,245	72.7	3,330	74.6	3,410	76.5	3,490	57,900	104%
IMR 3031	56.3	3,205	57.8	3,270	59.4	3,340	61.0	3,405	62.5	3,470	57,800	84%
Norma 204	66.5	3,155	68.3	3,230	70.2	3,310	72.1	3,390	73.9	3,465	57,900	98%
Ramshot Hunter	67.7	3,155	69.6	3,235	71.5	3,310	73.3	3,385	75.2	3,465	57,800	101%
Vihtavuori N550	62.5	3,190	64.2	3,255	66.0	3,330	67.7	3,395	69.4	3,465	57,900	92%
IMR 4831	68.4	3,130	70.3	3,210	72.2	3,295	74.1	3,375	76.0	3,460	57,900	103%
Hodgdon H4350	65.9	3,140	67.7	3,215	69.6	3,295	71.4	3,370	73.2	3,445	57,800	93%
Accurate 2700	63.3	3,140	65.0	3,210	66.8	3,285	68.5	3,355	70.3	3,430	57,900	91%
Alliant Reloder 17	63.7	3,115	65.5	3,190	67.3	3,265	69.0	3,340	70.8	3,420	57,900	90%
Vihtavuori N150	58.9	3,145	60.5	3,210	62.2	3,280	63.8	3,345	65.4	3,410	58,000	93%
Alliant Reloder 19	68.3	3,045	70.2	3,125	72.1	3,205	74.0	3,285	75.9	3,365	57,800	102%

150 gr Bullet · 25" barrel

COAL: 3.325" • Bullet length: 1.174" • Seat depth: 0.699" • Usable capacity: 74.5 / 86.0 gr H_2O

Powder	STEP 1 · 90%		STEP 2		STEP 3		STEP 4		STEP 5 · LIMIT			
	gr	fps	gr	fps	gr	fps	gr	fps	gr	fps	psi	Fill
Accurate 4350	64.0	3,020	65.8	3,090	67.5	3,160	69.3	3,235	71.1	3,305	57,900	100%
Alliant Reloder 26	69.0	2,965	70.9	3,040	72.8	3,115	74.8	3,195	76.7	3,275	57,800	103%
Hodgdon H380	60.7	3,000	62.4	3,070	64.1	3,135	65.7	3,200	67.4	3,270	58,000	96%
Hodgdon SUPERFORMANCE	64.9	2,970	66.7	3,040	68.5	3,115	70.3	3,185	72.1	3,260	57,900	95%
Vihtavuori N555	63.5	2,960	65.3	3,030	67.0	3,100	68.8	3,170	70.5	3,240	57,800	102%
IMR 4350	62.2	2,960	63.9	3,025	65.7	3,100	67.4	3,165	69.1	3,235	57,900	100%
Winchester StaBALL 6.5	61.7	2,960	63.4	3,030	65.2	3,100	66.9	3,165	68.6	3,235	57,900	93%
IMR 4831	63.8	2,925	65.6	3,000	67.3	3,070	69.1	3,145	70.9	3,225	57,800	102%
Alliant Reloder 23	64.7	2,925	66.5	2,995	68.3	3,065	70.1	3,135	71.9	3,210	57,900	105%
Alliant Reloder 22	65.8	2,900	67.6	2,970	69.4	3,045	71.3	3,120	73.1	3,195	57,900	104%
Alliant Reloder 16	59.7	2,925	61.4	2,990	63.0	3,055	64.7	3,125	66.3	3,185	57,800	99%
Hodgdon H4831SC	65.7	2,890	67.5	2,960	69.3	3,035	71.2	3,110	73.0	3,180	57,800	99%
Alliant Power Pro 4000-MR	63.1	2,895	64.8	2,960	66.6	3,030	68.3	3,100	70.1	3,175	58,000	96%
Alliant Power Pro 2000-MR	57.5	2,905	59.1	2,970	60.7	3,035	62.3	3,100	63.9	3,165	57,800	90%
Alliant Reloder 17	59.2	2,885	60.9	2,955	62.5	3,025	64.2	3,095	65.8	3,160	57,800	89%
Hodgdon H414	59.4	2,890	61.0	2,955	62.7	3,025	64.3	3,090	66.0	3,160	57,900	90%
Alliant Reloder 19	63.7	2,855	65.5	2,930	67.3	3,000	69.0	3,070	70.8	3,145	58,000	101%
Ramshot Grand	69.0	2,810	70.9	2,885	72.8	2,960	74.8	3,040	76.7	3,115	55,100	105%
Vihtavuori N165	65.5	2,835	67.3	2,905	69.2	2,975	71.0	3,045	72.8	3,115	55,400	105%
Vihtavuori N160	61.0	2,825	62.7	2,890	64.4	2,960	66.1	3,025	67.8	3,090	57,900	99%

165 gr Bullet · 25" barrel

COAL: 3.575" • Bullet length: 1.274" • Seat depth: 0.549" • Usable capacity: 76.1 / 86.0 gr H_2O

Powder	STEP 1 · 90%		STEP 2		STEP 3		STEP 4		STEP 5 · LIMIT			
	gr	fps	gr	fps	gr	fps	gr	fps	gr	fps	psi	Fill
Accurate 4350	63.3	2,910	65.0	2,975	66.8	3,045	68.5	3,110	70.3	3,180	57,900	97%
Alliant Reloder 26	68.6	2,890	70.5	2,960	72.4	3,030	74.3	3,105	76.2	3,180	57,800	101%
Vihtavuori N560	67.8	2,885	69.7	2,955	71.5	3,020	73.4	3,090	75.3	3,160	57,900	103%
Hodgdon SUPERFORMANCE	64.3	2,870	66.1	2,940	67.8	3,005	69.6	3,075	71.4	3,145	57,900	92%
IMR 4831	63.5	2,845	65.3	2,915	67.0	2,985	68.8	3,055	70.6	3,130	57,900	100%
Hodgdon H4831	66.6	2,835	68.4	2,905	70.3	2,980	72.2	3,050	74.0	3,120	58,000	104%
Hodgdon H380	59.6	2,860	61.3	2,925	62.9	2,985	64.5	3,045	66.2	3,110	57,900	92%
IMR 4350	61.2	2,840	62.9	2,905	64.6	2,970	66.3	3,035	68.0	3,105	58,000	96%
Alliant Reloder 22	65.3	2,825	67.1	2,890	68.9	2,960	70.7	3,030	72.5	3,100	57,800	101%
Norma URP	60.2	2,825	61.9	2,890	63.6	2,960	65.2	3,025	66.9	3,090	57,900	96%
Ramshot Grand	70.1	2,795	72.0	2,865	74.0	2,940	76.0	3,015	77.9	3,090	57,900	104%
IMR 7828SSC	66.3	2,800	68.2	2,870	70.0	2,940	71.8	3,005	73.7	3,080	57,900	101%
IMR 4955	63.5	2,800	65.3	2,870	67.0	2,935	68.8	3,005	70.5	3,070	57,900	93%
Winchester Supreme 780	67.1	2,775	68.9	2,845	70.8	2,915	72.7	2,990	74.5	3,060	57,800	99%
Alliant Reloder 19	63.3	2,780	65.0	2,850	66.8	2,920	68.5	2,985	70.3	3,055	57,900	98%
Hodgdon H4350	59.7	2,795	61.4	2,860	63.0	2,920	64.7	2,990	66.3	3,050	57,900	88%
Ramshot Magnum	71.6	2,745	73.6	2,820	75.6	2,895	77.6	2,970	79.6	3,045	55,600	105%
Vihtavuori N165	65.7	2,780	67.5	2,845	69.3	2,910	71.2	2,980	73.0	3,045	58,000	103%
Accurate 3100	63.8	2,740	65.6	2,810	67.3	2,875	69.1	2,945	70.9	3,015	57,900	101%
Vihtavuori N160	59.9	2,710	61.6	2,775	63.3	2,835	64.9	2,895	66.6	2,960	57,800	95%

180 gr Bullet · 25" barrel

COAL: 3.545" • Bullet length: 1.331" • Seat depth: 0.636" • Usable capacity: 74.6 / 86.0 gr H_2O

Powder	STEP 1 · 90%		STEP 2		STEP 3		STEP 4		STEP 5 · LIMIT			
	gr	fps	gr	fps	gr	fps	gr	fps	gr	fps	psi	Fill
Alliant Reloder 26	66.5	2,785	68.3	2,855	70.2	2,925	72.1	2,995	73.9	3,065	58,000	99%
Accurate 4350	61.1	2,785	62.8	2,845	64.5	2,910	66.2	2,975	67.9	3,040	57,800	95%
Hodgdon SUPERFORMANCE	62.2	2,755	63.9	2,820	65.7	2,890	67.4	2,955	69.1	3,015	57,900	91%
IMR 4831	61.7	2,745	63.4	2,810	65.1	2,875	66.8	2,945	68.5	3,010	57,900	99%
Vihtavuori N560	65.0	2,755	66.8	2,820	68.6	2,880	70.4	2,945	72.2	3,010	57,800	101%
Hodgdon H4831	64.4	2,730	66.2	2,795	68.0	2,865	69.8	2,930	71.6	3,000	58,000	103%
Alliant Reloder 22	63.2	2,720	65.0	2,785	66.7	2,850	68.5	2,920	70.2	2,985	57,900	100%
Reload Swiss RS62	61.0	2,720	62.7	2,785	64.4	2,850	66.1	2,915	67.8	2,980	58,000	95%
Ramshot Magnum	70.2	2,685	72.2	2,760	74.1	2,825	76.0	2,895	78.0	2,970	57,000	105%
Alliant Reloder 23	61.9	2,710	63.6	2,770	65.3	2,835	67.1	2,905	68.8	2,965	57,800	100%
Vihtavuori N565	67.1	2,695	68.9	2,760	70.8	2,830	72.7	2,900	74.5	2,965	55,100	105%
IMR 4350	58.9	2,715	60.5	2,775	62.2	2,840	63.8	2,900	65.4	2,960	57,800	94%
IMR 4955	61.5	2,695	63.2	2,760	64.9	2,820	66.6	2,885	68.3	2,950	57,900	92%
Winchester Supreme 780	65.0	2,685	66.8	2,750	68.6	2,815	70.4	2,885	72.2	2,950	58,000	97%
Alliant Reloder 19	61.3	2,680	63.0	2,745	64.7	2,810	66.4	2,875	68.1	2,940	57,800	97%
IMR 7828	63.7	2,665	65.5	2,735	67.3	2,800	69.0	2,860	70.8	2,930	57,800	96%
Hodgdon H4350	57.4	2,670	59.0	2,730	60.6	2,795	62.2	2,855	63.8	2,915	57,900	86%
Vihtavuori N165	63.3	2,660	65.0	2,720	66.8	2,785	68.5	2,850	70.3	2,915	58,000	101%
Vihtavuori N170	66.8	2,660	68.7	2,720	70.5	2,780	72.3	2,845	74.2	2,910	57,900	103%
Accurate MagPro	66.3	2,625	68.2	2,695	70.0	2,760	71.8	2,825	73.7	2,900	57,900	101%

190 gr Bullet · 25" barrel

COAL: 3.580" • Bullet length: 1.363" • Seat depth: 0.633" • Usable capacity: 74.7 / 86.0 gr H_2O

Powder	STEP 1 · 90%		STEP 2		STEP 3		STEP 4		STEP 5 · LIMIT			
	gr	fps	gr	fps	gr	fps	gr	fps	gr	fps	psi	Fill
Alliant Reloder 26	65.6	2,725	67.4	2,790	69.3	2,860	71.1	2,925	72.9	2,995	57,800	98%
Accurate 4350	60.3	2,715	62.0	2,780	63.6	2,840	65.3	2,900	67.0	2,965	57,900	94%
Vihtavuori N565	67.1	2,685	69.0	2,755	70.8	2,815	72.7	2,885	74.6	2,955	57,600	105%
Hodgdon SUPERFORMANCE	61.4	2,695	63.1	2,755	64.8	2,820	66.5	2,880	68.2	2,945	57,900	89%
IMR 4831	61.0	2,685	62.7	2,750	64.4	2,815	66.1	2,880	67.8	2,945	58,000	97%
Ramshot Magnum	69.9	2,655	71.9	2,725	73.8	2,795	75.8	2,865	77.7	2,935	57,900	104%
Hodgdon H4831	63.5	2,670	65.3	2,735	67.0	2,795	68.8	2,865	70.6	2,930	57,800	101%
Vihtavuori N560	63.7	2,680	65.5	2,740	67.3	2,805	69.0	2,860	70.8	2,925	57,900	99%
Ramshot Grand	67.5	2,650	69.4	2,715	71.3	2,785	73.1	2,850	75.0	2,920	57,900	102%
Alliant Reloder 22	62.4	2,660	64.1	2,725	65.8	2,785	67.6	2,855	69.3	2,915	57,900	99%
Hodgdon H4831SC	62.5	2,645	64.2	2,705	66.0	2,770	67.7	2,835	69.4	2,895	57,900	93%
IMR 7828SSC	63.1	2,640	64.8	2,700	66.6	2,765	68.3	2,825	70.1	2,895	57,900	98%
Winchester StaBALL HD	69.2	2,615	71.1	2,680	73.1	2,750	75.0	2,820	76.9	2,890	57,500	105%
Norma MRP	62.2	2,630	63.9	2,690	65.7	2,760	67.4	2,820	69.1	2,880	57,900	96%
IMR 7828	62.8	2,610	64.5	2,670	66.3	2,740	68.0	2,800	69.8	2,865	57,900	94%
Alliant Reloder 25	64.6	2,590	66.4	2,655	68.2	2,720	70.0	2,785	71.8	2,850	56,500	105%
Hodgdon H4350	56.4	2,600	58.0	2,660	59.5	2,715	61.1	2,775	62.7	2,835	57,800	85%
Vihtavuori N165	62.2	2,595	63.9	2,650	65.7	2,715	67.4	2,775	69.1	2,835	57,900	99%
Hodgdon H1000	65.0	2,570	66.8	2,635	68.6	2,700	70.4	2,765	72.2	2,830	55,200	105%
Vihtavuori N170	65.6	2,585	67.4	2,645	69.3	2,705	71.1	2,765	72.9	2,825	57,800	101%

200 gr Bullet · 25" barrel

COAL: 3.580" • Bullet length: 1.489" • Seat depth: 0.759" • Usable capacity: 72.4 / 86.0 gr H_2O

Powder	STEP 1 · 90%		STEP 2		STEP 3		STEP 4		STEP 5 · LIMIT			
	gr	fps	gr	fps	gr	fps	gr	fps	gr	fps	psi	Fill
Alliant Reloder 26	63.6	2,650	65.4	2,715	67.2	2,780	68.9	2,840	70.7	2,910	58,000	98%
Vihtavuori N565	65.1	2,620	66.9	2,685	68.7	2,750	70.5	2,815	72.3	2,880	57,900	105%
Accurate 4350	58.3	2,625	59.9	2,685	61.5	2,745	63.2	2,810	64.8	2,870	57,900	93%
Ramshot Magnum	67.9	2,590	69.8	2,655	71.7	2,725	73.5	2,790	75.4	2,860	57,900	104%
IMR 4831	59.1	2,605	60.8	2,670	62.4	2,730	64.0	2,790	65.7	2,855	57,900	97%
Hodgdon SUPERFORMANCE	59.4	2,610	61.0	2,665	62.7	2,730	64.3	2,790	66.0	2,850	57,800	89%
Hodgdon H4831	61.6	2,595	63.3	2,655	65.0	2,715	66.7	2,780	68.4	2,845	58,000	101%
Ramshot Grand	65.5	2,575	67.3	2,640	69.2	2,705	71.0	2,770	72.8	2,840	58,000	102%
Alliant Reloder 22	60.4	2,580	62.1	2,645	63.8	2,705	65.4	2,765	67.1	2,830	57,900	98%
Reload Swiss RS76	66.6	2,570	68.4	2,630	70.3	2,695	72.2	2,765	74.0	2,825	57,800	103%
Hodgdon H4831SC	60.5	2,565	62.2	2,625	63.9	2,685	65.5	2,745	67.2	2,805	57,800	93%
Winchester Supreme 780	62.1	2,555	63.8	2,615	65.5	2,680	67.3	2,745	69.0	2,805	57,900	96%
IMR 4350	56.0	2,555	57.5	2,610	59.1	2,670	60.7	2,730	62.2	2,785	58,000	92%
Vihtavuori N555	55.8	2,555	57.3	2,610	58.9	2,670	60.5	2,730	62.0	2,785	57,900	92%
IMR 7828	60.8	2,535	62.5	2,600	64.2	2,660	65.8	2,715	67.5	2,780	58,000	94%
Alliant Reloder 25	62.7	2,520	64.5	2,585	66.2	2,645	68.0	2,710	69.7	2,775	56,800	105%
Alliant Power Pro 4000-MR	57.9	2,535	59.5	2,595	61.1	2,655	62.7	2,710	64.3	2,770	57,900	90%
Hodgdon H4350	54.5	2,515	56.0	2,570	57.5	2,630	59.1	2,690	60.6	2,745	58,000	84%
Vihtavuori N165	60.0	2,505	61.7	2,565	63.4	2,625	65.0	2,680	66.7	2,740	57,800	99%
Vihtavuori N170	63.5	2,505	65.3	2,560	67.0	2,620	68.8	2,680	70.5	2,735	58,000	101%

210 gr Bullet · 25" barrel

COAL: 3.600" • Bullet length: 1.464" • Seat depth: 0.714" • Usable capacity: 73.1 / 86.0 gr H_2O

Powder	STEP 1 · 90%		STEP 2		STEP 3		STEP 4		STEP 5 · LIMIT			
	gr	fps	gr	fps	gr	fps	gr	fps	gr	fps	psi	Fill
Alliant Reloder 26	63.1	2,595	64.8	2,655	66.6	2,720	68.3	2,785	70.1	2,850	57,800	96%
Vihtavuori N570	67.1	2,570	68.9	2,635	70.8	2,700	72.7	2,770	74.5	2,835	56,800	105%
Ramshot Magnum	67.6	2,550	69.5	2,620	71.3	2,680	73.2	2,750	75.1	2,815	58,000	103%
Vihtavuori N565	64.1	2,570	65.9	2,630	67.7	2,690	69.4	2,750	71.2	2,815	58,000	102%
Hodgdon Retumbo	66.4	2,550	68.3	2,615	70.1	2,680	72.0	2,745	73.8	2,810	57,800	105%
Accurate 4350	57.8	2,570	59.4	2,625	61.0	2,685	62.6	2,740	64.2	2,800	58,000	92%
IMR 4831	58.8	2,555	60.4	2,615	62.0	2,675	63.7	2,740	65.3	2,800	57,800	96%
Reload Swiss RS76	66.2	2,520	68.0	2,580	69.9	2,645	71.8	2,710	73.6	2,775	57,800	102%
Alliant Reloder 22	59.9	2,530	61.6	2,590	63.3	2,650	64.9	2,710	66.6	2,770	57,900	97%
Reload Swiss RS70	59.6	2,525	61.3	2,585	62.9	2,645	64.5	2,700	66.2	2,765	57,900	91%
Hodgdon H4831SC	60.0	2,510	61.7	2,570	63.4	2,630	65.0	2,685	66.7	2,750	57,800	92%
Vihtavuori N560	60.6	2,525	62.3	2,580	64.0	2,640	65.6	2,695	67.3	2,750	58,000	96%
Alliant Reloder 25	62.9	2,495	64.7	2,560	66.4	2,620	68.2	2,685	69.9	2,745	57,900	104%
IMR 7828SSC	60.4	2,505	62.1	2,565	63.8	2,625	65.4	2,685	67.1	2,745	57,900	95%
Alliant Reloder 23	58.6	2,510	60.2	2,565	61.8	2,625	63.5	2,685	65.1	2,740	57,800	97%
Norma MRP	59.7	2,500	61.4	2,560	63.0	2,615	64.7	2,675	66.3	2,730	57,900	94%
IMR 7828	60.1	2,485	61.8	2,545	63.5	2,605	65.1	2,660	66.8	2,720	57,900	92%
IMR 4350	55.4	2,495	56.9	2,550	58.5	2,610	60.0	2,660	61.5	2,715	58,000	90%
Ramshot Hunter	57.1	2,490	58.7	2,550	60.3	2,605	61.8	2,660	63.4	2,715	57,800	92%
Alliant Power Pro 4000-MR	57.4	2,480	59.0	2,535	60.6	2,595	62.2	2,650	63.8	2,710	57,900	89%

220 gr Bullet · 25" barrel

COAL: 3.550" • Bullet length: 1.536" • Seat depth: 0.836" • Usable capacity: 71.1 / 86.0 gr H_2O

Powder	STEP 1 · 90%		STEP 2		STEP 3		STEP 4		STEP 5 · LIMIT			
	gr	fps	gr	fps	gr	fps	gr	fps	gr	fps	psi	Fill
Alliant Reloder 26	61.3	2,525	63.0	2,585	64.7	2,650	66.4	2,710	68.1	2,770	57,900	96%
Vihtavuori N570	65.3	2,515	67.1	2,580	68.9	2,640	70.7	2,705	72.5	2,770	57,000	105%
Ramshot Magnum	65.7	2,485	67.5	2,550	69.3	2,610	71.2	2,680	73.0	2,745	57,900	103%
Hodgdon Retumbo	64.6	2,485	66.4	2,545	68.2	2,605	70.0	2,670	71.8	2,735	57,900	105%
Vihtavuori N565	62.0	2,495	63.7	2,555	65.5	2,615	67.2	2,675	68.9	2,735	57,900	102%
IMR 4831	57.2	2,490	58.8	2,545	60.4	2,605	61.9	2,660	63.5	2,720	57,900	96%
Accurate 4350	56.0	2,490	57.5	2,540	59.1	2,600	60.7	2,660	62.2	2,715	57,800	91%
Alliant Reloder 22	58.1	2,460	59.7	2,515	61.3	2,570	63.0	2,635	64.6	2,690	57,800	96%
IMR 8133	64.6	2,425	66.4	2,490	68.2	2,550	70.0	2,615	71.8	2,680	57,800	105%
Winchester Supreme 780	59.9	2,445	61.5	2,500	63.2	2,560	64.8	2,615	66.5	2,680	58,000	94%
Hodgdon H1000	61.9	2,430	63.6	2,490	65.3	2,550	67.1	2,610	68.8	2,675	57,800	105%
Alliant Reloder 25	61.1	2,430	62.8	2,490	64.5	2,550	66.2	2,610	67.9	2,670	57,800	104%
Hodgdon H4831SC	58.3	2,440	59.9	2,495	61.5	2,555	63.2	2,615	64.8	2,670	57,900	92%
Vihtavuori N560	58.6	2,445	60.2	2,500	61.8	2,555	63.5	2,610	65.1	2,665	57,900	96%
Alliant Reloder 23	56.9	2,440	58.5	2,495	60.0	2,545	61.6	2,605	63.2	2,660	57,800	96%
IMR 7828SSC	58.5	2,435	60.1	2,490	61.8	2,550	63.4	2,605	65.0	2,660	57,800	95%
Accurate MagPro	61.7	2,410	63.4	2,470	65.2	2,535	66.9	2,595	68.6	2,655	57,800	98%
IMR 7828	58.2	2,410	59.8	2,465	61.5	2,525	63.1	2,585	64.7	2,640	57,800	92%
Alliant Power Pro 4000-MR	55.7	2,405	57.3	2,465	58.8	2,515	60.4	2,575	61.9	2,630	57,800	89%
IMR 4350	53.6	2,415	55.1	2,470	56.5	2,520	58.0	2,575	59.5	2,630	57,800	90%

.300 Norma Magnum

The Swedish ammunition manufacturer Norma developed the .300 Norma Magnum in 2012. It did so by necking its .338 Norma Magnum case down to .30 caliber. The cartridge was intended for long-range shooting with long and heavy bullets of high ballistic coefficient. It is standardized by C.I.P. SAAMI accepted it in 2021.

Match loads drive bullets of 215 to 240 grains at roughly 2,900 to 3,000 fps. SAAMI's reference load uses a 230-grain bullet at 2,890 fps. In March 2019 the U.S. Special Operations Command (USSOCOM) awarded Barrett a contract for its Advanced Sniper Rifle. This multi-caliber design is based on the Barrett MRAD. It is chambered for 7.62x51mm NATO, .300 Norma Magnum and .338 Norma Magnum. The rifle entered service as the MK22. Other U.S. services later ordered it. Among civilians the .300 Norma Magnum is popular for long-range target shooting. It is also used for long-range hunting of large game.

Cartridge specifications	
Bullet Diameter	**0.308" (7.82 mm)**
Max Case Length	**2.492" (63.30 mm)**
Case Trim Length	**2.482" (63.04 mm)**
Max COAL	**3.681" (93.50 mm)**
Primer Pocket	**Large Rifle**
Standard Twist	**1:10"**
Case Capacity	**103.8 gr H_2O**
Max Pressure	**61,000 psi (SAAMI)**

175 gr Bullet · 25" barrel

COAL: 3.430" • Bullet length: 1.384" • Seat depth: 0.446" • Usable capacity: 96.0 / 103.8 gr H_2O

Powder	STEP 1 · 90%		STEP 2		STEP 3		STEP 4		STEP 5 · LIMIT			
	gr	fps	gr	fps	gr	fps	gr	fps	gr	fps	psi	Fill
Vihtavuori N570	82.4	2,960	84.7	3,030	87.0	3,105	89.2	3,180	91.5	3,255	61,000	98%
Alliant Reloder 26	76.9	2,960	79.0	3,030	81.2	3,100	83.3	3,170	85.4	3,240	60,900	89%
Ramshot Grand	80.7	2,935	83.0	3,010	85.2	3,080	87.5	3,155	89.7	3,225	60,900	95%
Accurate MagPro	79.9	2,910	82.1	2,980	84.3	3,055	86.6	3,130	88.8	3,200	61,000	94%
Hodgdon Retumbo	80.2	2,900	82.4	2,970	84.7	3,040	86.9	3,110	89.1	3,180	60,900	97%
Alliant Reloder 23	72.8	2,915	74.8	2,980	76.8	3,045	78.9	3,110	80.9	3,175	60,800	91%
Reload Swiss RS76	80.9	2,890	83.2	2,960	85.4	3,030	87.7	3,100	89.9	3,170	60,900	94%
Alliant Reloder 25	77.7	2,880	79.8	2,950	82.0	3,020	84.2	3,090	86.3	3,160	60,900	98%
Winchester StaBALL HD	81.6	2,875	83.9	2,945	86.2	3,015	88.4	3,085	90.7	3,160	60,900	96%
Ramshot Magnum	80.5	2,850	82.7	2,920	85.0	2,995	87.2	3,065	89.4	3,135	61,000	93%
Vihtavuori N565	75.9	2,865	78.0	2,930	80.1	2,995	82.2	3,065	84.3	3,130	61,000	92%
Hodgdon H1000	77.7	2,850	79.8	2,915	82.0	2,985	84.2	3,055	86.3	3,125	60,800	98%
IMR 7828SSC	73.8	2,860	75.8	2,925	77.9	2,990	80.0	3,060	82.0	3,125	60,900	89%
Vihtavuori N568	81.8	2,810	84.1	2,885	86.3	2,960	88.6	3,035	90.9	3,115	61,000	98%
IMR 7977	77.6	2,830	79.8	2,905	81.9	2,970	84.0	3,035	86.2	3,110	60,900	97%
Ramshot LRT	85.8	2,815	88.2	2,890	90.5	2,960	92.9	3,035	95.3	3,110	60,800	101%
Hodgdon H4831	72.6	2,835	74.6	2,900	76.7	2,965	78.7	3,030	80.7	3,095	61,000	90%
Accurate 3100	71.7	2,820	73.7	2,885	75.7	2,950	77.7	3,015	79.7	3,085	61,000	90%
Hodgdon H50BMG	86.3	2,770	88.7	2,845	91.1	2,915	93.5	2,990	95.9	3,060	60,900	102%
IMR 8133	78.3	2,755	80.5	2,825	82.7	2,895	84.8	2,960	87.0	3,030	61,000	94%

190 gr Bullet · 25" barrel

COAL: 3.430" • Bullet length: 1.329" • Seat depth: 0.391" • Usable capacity: 97.2 / 103.8 gr H_2O

Powder	STEP 1 · 90%		STEP 2		STEP 3		STEP 4		STEP 5 · LIMIT			
	gr	fps	gr	fps	gr	fps	gr	fps	gr	fps	psi	Fill
Vihtavuori N570	80.6	2,865	82.8	2,935	85.0	3,000	87.3	3,075	89.5	3,145	61,000	95%
Ramshot Grand	79.9	2,845	82.1	2,910	84.3	2,980	86.6	3,050	88.8	3,120	60,900	93%
Alliant Reloder 26	75.5	2,850	77.6	2,915	79.7	2,985	81.8	3,050	83.9	3,115	60,900	87%
Accurate MagPro	79.1	2,830	81.3	2,895	83.5	2,965	85.7	3,035	87.9	3,105	60,900	92%
Hodgdon Retumbo	79.1	2,805	81.3	2,870	83.5	2,940	85.7	3,005	87.9	3,075	60,900	94%
Reload Swiss RS76	79.9	2,795	82.1	2,860	84.3	2,925	86.6	2,990	88.8	3,060	61,000	92%
Alliant Reloder 25	76.8	2,795	78.9	2,855	81.0	2,920	83.2	2,990	85.3	3,055	60,800	96%
Alliant Reloder 23	71.5	2,800	73.5	2,865	75.5	2,925	77.4	2,985	79.4	3,050	61,000	89%
Vihtavuori N568	80.9	2,755	83.2	2,830	85.4	2,900	87.7	2,975	89.9	3,050	60,900	96%
Winchester StaBALL HD	80.6	2,785	82.8	2,850	85.0	2,915	87.3	2,985	89.5	3,050	60,900	94%
Ramshot Magnum	79.6	2,775	81.8	2,840	84.0	2,905	86.2	2,975	88.4	3,045	61,000	91%
Alliant Reloder 22	72.0	2,790	74.0	2,855	76.0	2,915	78.0	2,980	80.0	3,040	61,000	87%
Hodgdon H1000	76.7	2,760	78.8	2,825	81.0	2,895	83.1	2,960	85.2	3,025	60,900	95%
Ramshot LRT	85.0	2,745	87.3	2,810	89.7	2,880	92.1	2,955	94.4	3,025	60,900	99%
Winchester Supreme 780	73.7	2,755	75.8	2,825	77.8	2,885	79.9	2,955	81.9	3,015	61,000	85%
IMR 7977	76.7	2,745	78.8	2,810	81.0	2,880	83.1	2,945	85.2	3,010	60,800	95%
IMR 7828SSC	72.5	2,755	74.5	2,820	76.5	2,880	78.5	2,945	80.5	3,005	61,000	86%
Hodgdon H50BMG	85.4	2,700	87.8	2,765	90.2	2,835	92.5	2,905	94.9	2,975	60,900	99%
IMR 8133	77.5	2,680	79.7	2,750	81.8	2,810	83.9	2,875	86.1	2,945	60,900	92%
Vihtavuori 24N41	81.4	2,665	83.7	2,735	85.9	2,800	88.2	2,870	90.4	2,940	60,800	95%

200 gr Bullet · 25" barrel

COAL: 3.400" • Bullet length: 1.543" • Seat depth: 0.636" • Usable capacity: 92.6 / 103.8 gr H_2O

Powder	STEP 1 · 90%		STEP 2		STEP 3		STEP 4		STEP 5 · LIMIT			
	gr	fps	gr	fps	gr	fps	gr	fps	gr	fps	psi	Fill
Vihtavuori N570	77.2	2,785	79.3	2,850	81.5	2,915	83.7	2,985	85.8	3,055	60,900	95%
Ramshot Grand	76.7	2,755	78.8	2,820	81.0	2,890	83.1	2,955	85.2	3,025	60,800	94%
Alliant Reloder 26	72.4	2,765	74.4	2,825	76.4	2,890	78.4	2,955	80.4	3,020	60,800	87%
Accurate MagPro	76.0	2,745	78.1	2,810	80.2	2,880	82.3	2,945	84.4	3,015	60,900	93%
Hodgdon Retumbo	76.0	2,720	78.1	2,785	80.2	2,850	82.3	2,915	84.4	2,980	60,900	95%
Alliant Reloder 25	73.6	2,705	75.6	2,765	77.7	2,835	79.8	2,900	81.8	2,965	60,900	96%
Vihtavuori N568	77.7	2,690	79.8	2,755	82.0	2,825	84.2	2,900	86.3	2,965	60,900	96%
Reload Swiss RS76	76.7	2,705	78.8	2,770	81.0	2,835	83.1	2,900	85.2	2,960	60,900	93%
Winchester StaBALL HD	77.3	2,695	79.5	2,765	81.6	2,825	83.8	2,895	85.9	2,960	60,800	94%
Ramshot Magnum	76.3	2,690	78.4	2,755	80.5	2,820	82.7	2,885	84.8	2,955	61,000	92%
Ramshot LRT	81.6	2,665	83.9	2,730	86.2	2,800	88.4	2,865	90.7	2,935	61,000	100%
Hodgdon H1000	73.5	2,675	75.5	2,735	77.6	2,800	79.7	2,870	81.7	2,930	61,000	96%
Winchester Supreme 780	70.7	2,675	72.7	2,740	74.6	2,800	76.5	2,860	78.5	2,920	61,000	85%
IMR 7977	73.5	2,660	75.5	2,720	77.6	2,785	79.7	2,850	81.7	2,915	60,800	96%
IMR 7828SSC	69.3	2,665	71.2	2,725	73.2	2,790	75.1	2,850	77.0	2,910	60,900	86%
Vihtavuori N565	70.4	2,670	72.4	2,730	74.3	2,790	76.3	2,850	78.2	2,910	60,900	89%
Hodgdon H50BMG	81.9	2,615	84.2	2,685	86.5	2,750	88.7	2,815	91.0	2,885	60,800	100%
Vihtavuori N560	67.8	2,640	69.7	2,695	71.5	2,750	73.4	2,810	75.3	2,865	60,900	85%
IMR 8133	74.3	2,600	76.4	2,665	78.4	2,725	80.5	2,790	82.6	2,855	60,900	93%
Vihtavuori 24N41	77.9	2,590	80.1	2,655	82.3	2,720	84.4	2,785	86.6	2,855	60,900	95%

210 gr Bullet · 25" barrel

COAL: 3.455" • Bullet length: 1.478" • Seat depth: 0.515" • Usable capacity: 94.7 / 103.8 gr H_2O

Powder	STEP 1 · 90%		STEP 2		STEP 3		STEP 4		STEP 5 · LIMIT			
	gr	fps	gr	fps	gr	fps	gr	fps	gr	fps	psi	Fill
Vihtavuori N570	76.3	2,720	78.4	2,780	80.5	2,845	82.7	2,910	84.8	2,975	60,900	92%
Ramshot Grand	76.9	2,705	79.0	2,770	81.2	2,835	83.3	2,900	85.4	2,965	60,900	92%
Accurate MagPro	76.1	2,700	78.2	2,760	80.3	2,825	82.5	2,895	84.6	2,960	61,000	91%
Alliant Reloder 33	82.4	2,680	84.7	2,750	87.0	2,815	89.3	2,885	91.6	2,955	59,800	105%
Alliant Reloder 26	72.0	2,695	74.0	2,760	76.0	2,820	78.0	2,885	80.0	2,945	60,900	85%
Vihtavuori N568	77.7	2,655	79.8	2,720	82.0	2,790	84.2	2,860	86.3	2,925	60,800	94%
Hodgdon Retumbo	75.8	2,665	77.9	2,725	80.0	2,790	82.1	2,850	84.2	2,915	60,900	92%
Alliant Reloder 25	73.7	2,655	75.8	2,720	77.8	2,780	79.9	2,845	81.9	2,905	60,900	94%
Ramshot Magnum	76.3	2,640	78.4	2,705	80.5	2,770	82.7	2,835	84.8	2,900	60,900	90%
Reload Swiss RS76	76.6	2,650	78.7	2,710	80.8	2,770	83.0	2,835	85.1	2,895	60,900	91%
Winchester StaBALL HD	77.2	2,645	79.3	2,705	81.5	2,770	83.7	2,835	85.8	2,895	60,900	92%
Ramshot LRT	81.7	2,620	84.0	2,685	86.3	2,750	88.5	2,815	90.8	2,885	60,900	98%
Hodgdon H1000	73.4	2,625	75.5	2,685	77.5	2,745	79.5	2,805	81.6	2,870	61,000	93%
Alliant Reloder 23	68.0	2,635	69.9	2,695	71.8	2,755	73.6	2,810	75.5	2,865	60,900	87%
IMR 7977	73.6	2,610	75.6	2,670	77.7	2,735	79.8	2,800	81.8	2,860	60,900	94%
IMR 7828SSC	69.0	2,605	70.9	2,665	72.8	2,720	74.8	2,780	76.7	2,840	61,000	84%
Hodgdon H50BMG	82.0	2,575	84.3	2,640	86.5	2,700	88.8	2,765	91.1	2,835	60,900	98%
IMR 8133	74.5	2,560	76.6	2,620	78.7	2,685	80.7	2,745	82.8	2,810	61,000	91%
Vihtavuori 24N41	77.9	2,550	80.1	2,615	82.3	2,680	84.4	2,745	86.6	2,810	60,900	93%
Accurate 3100	67.2	2,575	69.1	2,635	71.0	2,695	72.8	2,750	74.7	2,805	61,000	86%

220 gr Bullet · 25" barrel

COAL: 3.300" • Bullet length: 1.606" • Seat depth: 0.798" • Usable capacity: 89.5 / 103.8 gr H_2O

Powder	STEP 1 · 90%		STEP 2		STEP 3		STEP 4		STEP 5 · LIMIT			
	gr	fps	gr	fps	gr	fps	gr	fps	gr	fps	psi	Fill
Vihtavuori N570	73.4	2,655	75.4	2,715	77.5	2,780	79.5	2,840	81.5	2,905	61,000	94%
Ramshot Grand	73.5	2,625	75.5	2,685	77.6	2,750	79.7	2,815	81.7	2,880	60,900	93%
Accurate MagPro	72.8	2,620	74.8	2,680	76.8	2,745	78.9	2,810	80.9	2,875	60,900	92%
Alliant Reloder 26	68.9	2,620	70.8	2,680	72.8	2,740	74.7	2,800	76.6	2,860	61,000	86%
Vihtavuori N568	74.4	2,585	76.5	2,655	78.6	2,720	80.6	2,785	82.7	2,850	61,000	96%
Alliant Reloder 33	77.9	2,575	80.1	2,640	82.3	2,705	84.4	2,770	86.6	2,835	58,100	105%
Hodgdon Retumbo	72.6	2,590	74.6	2,645	76.7	2,710	78.7	2,770	80.7	2,830	60,900	94%
Alliant Reloder 25	70.5	2,580	72.5	2,640	74.4	2,700	76.3	2,760	78.3	2,820	60,900	95%
Ramshot Magnum	73.1	2,570	75.1	2,630	77.2	2,695	79.2	2,755	81.2	2,820	61,000	91%
Winchester StaBALL HD	74.0	2,570	76.0	2,630	78.1	2,690	80.2	2,755	82.2	2,815	60,900	94%
Reload Swiss RS76	73.4	2,570	75.4	2,630	77.5	2,690	79.5	2,750	81.5	2,810	60,900	92%
Ramshot LRT	78.2	2,545	80.4	2,610	82.6	2,670	84.7	2,735	86.9	2,800	60,800	99%
Alliant Reloder 23	65.1	2,560	66.9	2,615	68.7	2,670	70.5	2,730	72.3	2,785	60,900	88%
Hodgdon H1000	70.2	2,545	72.2	2,605	74.1	2,665	76.0	2,725	78.0	2,785	60,900	95%
IMR 7977	70.4	2,535	72.4	2,595	74.3	2,655	76.3	2,715	78.2	2,775	60,900	95%
IMR 4955	64.5	2,540	66.3	2,600	68.1	2,655	69.9	2,715	71.7	2,770	60,900	81%
Vihtavuori N565	66.5	2,530	68.3	2,585	70.2	2,645	72.1	2,700	73.9	2,755	60,900	87%
Hodgdon H50BMG	78.5	2,500	80.7	2,565	82.8	2,625	85.0	2,685	87.2	2,750	60,900	99%
Vihtavuori 24N41	74.5	2,480	76.6	2,545	78.7	2,610	80.7	2,670	82.8	2,735	61,000	94%
IMR 8133	71.2	2,485	73.2	2,545	75.2	2,605	77.1	2,660	79.1	2,725	60,900	92%

230 gr Bullet · 25" barrel

COAL: 3.406" • Bullet length: 1.681" • Seat depth: 0.767" • Usable capacity: 90.1 / 103.8 gr H_2O

Powder	STEP 1 · 90%		STEP 2		STEP 3		STEP 4		STEP 5 · LIMIT			
	gr	fps	gr	fps	gr	fps	gr	fps	gr	fps	psi	Fill
Vihtavuori N570	72.1	2,590	74.1	2,650	76.1	2,710	78.1	2,770	80.1	2,830	61,000	91%
Accurate MagPro	72.4	2,575	74.4	2,635	76.4	2,695	78.4	2,760	80.4	2,820	60,900	91%
Ramshot Grand	73.0	2,575	75.0	2,635	77.0	2,695	79.1	2,760	81.1	2,820	60,800	92%
Alliant Reloder 33	78.4	2,560	80.6	2,625	82.8	2,690	84.9	2,750	87.1	2,815	60,200	105%
Vihtavuori N568	73.8	2,550	75.8	2,610	77.9	2,675	80.0	2,740	82.0	2,805	60,800	94%
Alliant Reloder 26	68.0	2,555	69.9	2,615	71.8	2,675	73.7	2,735	75.6	2,790	60,900	84%
Hodgdon Retumbo	71.9	2,535	73.9	2,590	75.9	2,650	77.9	2,710	79.9	2,770	60,900	92%
Alliant Reloder 25	69.9	2,525	71.9	2,585	73.8	2,645	75.8	2,705	77.7	2,765	60,900	94%
Ramshot Magnum	72.5	2,525	74.5	2,585	76.5	2,645	78.5	2,705	80.5	2,765	60,900	90%
Winchester StaBALL HD	73.4	2,520	75.4	2,575	77.5	2,635	79.5	2,695	81.5	2,755	61,000	92%
Ramshot LRT	77.7	2,500	79.8	2,560	82.0	2,625	84.2	2,690	86.3	2,750	60,800	98%
Reload Swiss RS76	72.7	2,515	74.7	2,570	76.8	2,635	78.8	2,690	80.8	2,750	60,900	90%
Hodgdon H1000	69.6	2,495	71.5	2,550	73.4	2,610	75.4	2,670	77.3	2,725	61,000	93%
IMR 7977	69.8	2,485	71.8	2,545	73.7	2,600	75.6	2,660	77.6	2,720	61,000	93%
Alliant Reloder 23	64.2	2,495	66.0	2,550	67.8	2,605	69.5	2,655	71.3	2,710	60,900	86%
Hodgdon H50BMG	77.9	2,455	80.1	2,515	82.2	2,575	84.3	2,635	86.5	2,700	60,900	98%
Vihtavuori N565	65.3	2,470	67.1	2,520	68.9	2,575	70.7	2,630	72.5	2,685	60,900	85%
Vihtavuori 24N41	73.8	2,440	75.8	2,500	77.9	2,560	80.0	2,620	82.0	2,680	60,800	93%
IMR 8133	70.7	2,440	72.7	2,500	74.7	2,560	76.6	2,615	78.6	2,675	60,900	91%
Vihtavuori N560	63.1	2,420	64.8	2,470	66.6	2,520	68.3	2,570	70.1	2,625	60,900	81%

250 gr Bullet · 25" barrel

COAL: 3.634" • Bullet length: 1.823" • Seat depth: 0.681" • Usable capacity: 91.7 / 103.8 gr H_2O

Powder	STEP 1 · 90%		STEP 2		STEP 3		STEP 4		STEP 5 · LIMIT			
	gr	fps	gr	fps	gr	fps	gr	fps	gr	fps	psi	Fill
Hodgdon US 869	84.2	2,530	86.5	2,595	88.8	2,665	91.2	2,735	93.5	2,800	60,200	105%
Alliant Reloder 33	77.9	2,480	80.1	2,540	82.3	2,600	84.4	2,660	86.6	2,720	61,000	102%
Vihtavuori N568	72.9	2,475	74.9	2,535	77.0	2,600	79.0	2,655	81.0	2,720	61,000	91%
Accurate MagPro	71.6	2,485	73.6	2,540	75.5	2,600	77.5	2,655	79.5	2,715	60,900	88%
Ramshot Grand	72.2	2,475	74.2	2,535	76.2	2,590	78.2	2,650	80.2	2,710	61,000	89%
Vihtavuori N570	69.8	2,470	71.7	2,525	73.7	2,580	75.6	2,635	77.5	2,690	60,900	87%
Alliant Reloder 26	66.5	2,440	68.3	2,495	70.2	2,550	72.1	2,605	73.9	2,660	60,900	81%
Ramshot Magnum	71.5	2,430	73.5	2,490	75.5	2,550	77.4	2,605	79.4	2,660	60,900	87%
Alliant Reloder 25	69.0	2,430	70.9	2,485	72.8	2,540	74.8	2,600	76.7	2,655	60,900	91%
Hodgdon Retumbo	70.6	2,425	72.5	2,480	74.5	2,535	76.5	2,595	78.4	2,650	60,900	89%
Ramshot LRT	76.8	2,415	78.9	2,475	81.0	2,530	83.2	2,590	85.3	2,650	61,000	95%
Winchester StaBALL HD	72.1	2,415	74.1	2,470	76.1	2,525	78.1	2,580	80.1	2,635	61,000	89%
Alliant Reloder 19	63.5	2,415	65.3	2,470	67.0	2,520	68.8	2,575	70.5	2,625	60,800	82%
Hodgdon H1000	68.4	2,395	70.3	2,445	72.2	2,500	74.1	2,555	76.0	2,610	61,000	90%
IMR 7977	68.9	2,390	70.8	2,445	72.7	2,500	74.6	2,555	76.5	2,610	61,000	91%
Hodgdon Hybrid 100V	60.5	2,400	62.2	2,455	63.9	2,505	65.5	2,555	67.2	2,605	60,900	82%
Hodgdon H50BMG	76.8	2,365	78.9	2,420	81.0	2,480	83.2	2,535	85.3	2,595	60,800	95%
Alliant Reloder 23	62.6	2,370	64.3	2,420	66.0	2,470	67.8	2,525	69.5	2,575	61,000	82%
IMR 8133	69.9	2,355	71.9	2,410	73.8	2,465	75.8	2,520	77.7	2,575	60,900	88%
IMR 7828SSC	63.8	2,360	65.6	2,410	67.3	2,460	69.1	2,515	70.9	2,565	60,800	80%

300 PRC

Hornady developed the 300 Precision Rifle Cartridge (PRC). SAAMI accepted it in 2018. C.I.P. standardization followed in 2019. The cartridge uses the beltless .375 Ruger case as its parent. That case is necked down to accept .308-inch bullets and fitted with a 30-degree shoulder. Hornady designed it around long and heavy high-ballistic-coefficient bullets. The chamber throat and magazine length are intended to keep those bullets seated out of the powder space. At the same time the cartridge fits long magnum actions with a standard magnum bolt face.

Hornady's original factory loads are a 212-grain ELD-X bullet at 2,860 fps and a 225-grain ELD Match bullet at 2,810 fps. Both figures come from a 24-inch barrel. The case headspaces on its shoulder rather than on a belt. This gives consistent chamber alignment for precision shooting. The 300 PRC is used in long-range target competition. Hunters also use it for elk and other large game at extended ranges. Rifles and ammunition are now offered by several major manufacturers.

Cartridge specifications	
Bullet Diameter	**0.308" (7.82 mm)**
Max Case Length	**2.580" (65.53 mm)**
Case Trim Length	**2.570" (65.28 mm)**
Max COAL	**3.700" (93.98 mm)**
Primer Pocket	**Large Rifle**
Standard Twist	**1:10"**
Case Capacity	**94.7 gr H_2O**
Max Pressure	**65,000 psi (SAAMI)**

155 gr Bullet · 25" barrel

COAL: 3.425" • Bullet length: 1.270" • Seat depth: 0.425" • Usable capacity: 87.2 / 94.7 gr H_2O

Powder	STEP 1 · 90%		STEP 2		STEP 3		STEP 4		STEP 5 · LIMIT			
	gr	fps	gr	fps	gr	fps	gr	fps	gr	fps	psi	Fill
Alliant Reloder 26	77.8	3,145	80.0	3,225	82.1	3,300	84.3	3,385	86.4	3,460	65,000	99%
Vihtavuori N560	77.0	3,145	79.2	3,220	81.3	3,295	83.4	3,370	85.6	3,445	64,800	103%
Alliant Reloder 23	73.7	3,110	75.8	3,185	77.8	3,260	79.9	3,335	81.9	3,410	64,800	102%
Accurate 4350	70.6	3,115	72.5	3,185	74.5	3,260	76.5	3,335	78.4	3,405	64,900	94%
Reload Swiss RS76	81.7	3,080	84.0	3,160	86.3	3,240	88.5	3,315	90.8	3,400	64,300	105%
Norma MRP	75.2	3,090	77.3	3,165	79.4	3,245	81.5	3,320	83.6	3,395	64,900	100%
Alliant Reloder 22	74.3	3,085	76.3	3,155	78.4	3,235	80.5	3,310	82.5	3,385	64,800	100%
Ramshot Grand	79.5	3,055	81.7	3,130	83.9	3,210	86.1	3,290	88.3	3,375	65,000	103%
Hodgdon H4831	74.9	3,065	77.0	3,140	79.1	3,215	81.1	3,290	83.2	3,370	65,000	102%
IMR 7828SSC	75.5	3,060	77.6	3,135	79.7	3,210	81.8	3,285	83.9	3,365	64,900	100%
Accurate MagPro	79.2	3,030	81.4	3,110	83.6	3,190	85.8	3,270	88.0	3,350	64,900	103%
Shooters World SW4350	71.9	3,060	73.9	3,135	75.9	3,205	77.9	3,275	79.9	3,350	64,800	99%
Vihtavuori N565	78.4	3,035	80.6	3,115	82.8	3,190	84.9	3,265	87.1	3,350	63,700	105%
Hodgdon H4831SC	73.7	3,045	75.8	3,120	77.8	3,190	79.9	3,270	81.9	3,340	64,900	94%
IMR 4955	71.8	3,040	73.8	3,110	75.8	3,185	77.8	3,260	79.8	3,335	64,900	92%
Ramshot Magnum	81.1	3,000	83.3	3,080	85.6	3,160	87.8	3,240	90.1	3,320	65,000	104%
IMR 7828	74.9	3,015	77.0	3,090	79.1	3,165	81.1	3,235	83.2	3,315	64,900	96%
Vihtavuori N165	74.6	3,025	76.7	3,100	78.8	3,170	80.8	3,240	82.9	3,315	65,000	102%
Alliant Reloder 16	66.4	3,030	68.3	3,095	70.1	3,160	72.0	3,230	73.8	3,295	64,800	94%
Vihtavuori N160	69.8	3,005	71.7	3,075	73.7	3,145	75.6	3,210	77.5	3,280	64,800	96%

165 gr Bullet · 25" barrel

COAL: 3.325" • Bullet length: 1.243" • Seat depth: 0.498" • Usable capacity: 85.8 / 94.7 gr H_2O

Powder	STEP 1 · 90%		STEP 2		STEP 3		STEP 4		STEP 5 · LIMIT			
	gr	fps	gr	fps	gr	fps	gr	fps	gr	fps	psi	Fill
Alliant Reloder 26	76.0	3,065	78.1	3,140	80.2	3,215	82.3	3,295	84.4	3,370	64,800	99%
Vihtavuori N560	75.0	3,055	77.1	3,125	79.2	3,200	81.2	3,270	83.3	3,340	64,900	101%
Reload Swiss RS76	80.3	3,015	82.5	3,090	84.8	3,165	87.0	3,245	89.2	3,325	65,000	105%
Alliant Reloder 23	72.0	3,025	74.0	3,095	76.0	3,170	78.0	3,240	80.0	3,315	64,800	101%
Norma MRP	73.5	3,010	75.5	3,085	77.6	3,155	79.7	3,235	81.7	3,305	64,900	99%
Accurate 4350	68.9	3,025	70.8	3,095	72.7	3,165	74.6	3,235	76.5	3,300	64,800	93%
Alliant Reloder 22	72.6	3,005	74.6	3,080	76.7	3,155	78.7	3,225	80.7	3,300	65,000	100%
Vihtavuori N565	77.0	2,990	79.1	3,060	81.3	3,140	83.4	3,215	85.5	3,290	64,800	105%
Alliant Reloder 19	71.1	2,990	73.1	3,060	75.0	3,130	77.0	3,205	79.0	3,280	64,900	98%
IMR 7828SSC	73.7	2,985	75.8	3,055	77.8	3,130	79.9	3,205	81.9	3,275	65,000	99%
Hodgdon H4831SC	72.1	2,970	74.1	3,040	76.1	3,110	78.1	3,180	80.1	3,255	65,000	94%
Shooters World SW4350	70.3	2,975	72.3	3,045	74.2	3,115	76.1	3,180	78.1	3,255	64,900	99%
IMR 4955	70.2	2,960	72.2	3,035	74.1	3,100	76.0	3,170	78.0	3,245	64,800	91%
Ramshot Magnum	79.4	2,935	81.6	3,015	83.8	3,090	86.0	3,170	88.2	3,245	64,900	103%
Winchester StaBALL HD	79.6	2,935	81.8	3,010	84.0	3,090	86.2	3,165	88.4	3,245	64,800	105%
IMR 7828	73.0	2,940	75.0	3,010	77.0	3,080	79.1	3,155	81.1	3,225	64,800	95%
Vihtavuori N165	72.7	2,940	74.7	3,010	76.8	3,080	78.8	3,150	80.8	3,220	65,000	101%
Accurate 3100	71.0	2,925	73.0	2,995	75.0	3,065	76.9	3,135	78.9	3,210	65,000	100%
Vihtavuori N170	76.2	2,920	78.3	2,985	80.5	3,060	82.6	3,125	84.7	3,195	64,900	103%
Alliant Reloder 16	64.6	2,935	66.4	2,995	68.2	3,060	70.0	3,125	71.8	3,190	64,800	93%

180 gr Bullet · 25" barrel

COAL: 3.320" • Bullet length: 1.383" • Seat depth: 0.643" • Usable capacity: 83.2 / 94.7 gr H_2O

Powder	STEP 1 · 90%		STEP 2		STEP 3		STEP 4		STEP 5 · LIMIT			
	gr	fps	gr	fps	gr	fps	gr	fps	gr	fps	psi	Fill
Alliant Reloder 26	73.1	2,945	75.1	3,015	77.2	3,090	79.2	3,160	81.2	3,235	65,000	98%
Reload Swiss RS76	77.3	2,890	79.5	2,965	81.6	3,035	83.8	3,110	85.9	3,185	64,900	104%
Vihtavuori N560	71.6	2,910	73.6	2,980	75.5	3,045	77.5	3,110	79.5	3,180	64,800	100%
Alliant Reloder 23	69.2	2,895	71.1	2,965	73.1	3,035	75.0	3,100	76.9	3,170	64,900	100%
Norma MRP	70.7	2,890	72.7	2,960	74.6	3,025	76.5	3,090	78.5	3,165	65,000	98%
Alliant Reloder 22	69.8	2,885	71.7	2,950	73.7	3,025	75.6	3,090	77.5	3,160	64,900	99%
Ramshot Grand	75.1	2,865	77.2	2,940	79.3	3,010	81.3	3,085	83.4	3,160	64,900	102%
Vihtavuori N565	73.6	2,875	75.6	2,945	77.7	3,015	79.8	3,090	81.8	3,160	65,000	103%
Vihtavuori N570	76.3	2,855	78.4	2,925	80.5	3,000	82.7	3,080	84.8	3,155	64,800	105%
Hodgdon Retumbo	75.6	2,855	77.7	2,930	79.8	3,000	81.9	3,075	84.0	3,150	64,200	105%
Hodgdon H4831	70.1	2,855	72.0	2,925	74.0	2,995	76.0	3,065	77.9	3,135	64,800	101%
IMR 7828SSC	70.7	2,860	72.7	2,930	74.6	3,000	76.5	3,065	78.5	3,135	65,000	98%
Ramshot Magnum	76.5	2,835	78.6	2,905	80.8	2,980	82.9	3,055	85.0	3,130	64,800	103%
Winchester StaBALL HD	76.7	2,825	78.8	2,895	81.0	2,970	83.1	3,045	85.2	3,115	64,800	104%
IMR 4955	67.5	2,840	69.4	2,905	71.3	2,975	73.1	3,040	75.0	3,110	64,800	91%
Ramshot Hunter	66.3	2,840	68.2	2,905	70.0	2,970	71.8	3,035	73.7	3,100	64,800	94%
Vihtavuori N555	64.1	2,840	65.9	2,900	67.7	2,965	69.4	3,025	71.2	3,090	64,900	92%
Accurate 3100	68.2	2,805	70.1	2,875	72.0	2,940	73.9	3,010	75.8	3,080	65,000	99%
IMR 7977	72.4	2,770	74.4	2,840	76.4	2,910	78.4	2,980	80.4	3,050	64,800	105%
Vihtavuori N170	72.9	2,785	74.9	2,845	77.0	2,915	79.0	2,975	81.0	3,045	64,800	101%

190 gr Bullet · 25" barrel

COAL: 3.430" • Bullet length: 1.470" • Seat depth: 0.620" • Usable capacity: 83.7 / 94.7 gr H_2O

Powder	STEP 1 · 90%		STEP 2		STEP 3		STEP 4		STEP 5 · LIMIT			
	gr	fps	gr	fps	gr	fps	gr	fps	gr	fps	psi	Fill
Alliant Reloder 26	72.3	2,880	74.3	2,950	76.3	3,020	78.3	3,090	80.3	3,160	64,800	96%
Reload Swiss RS76	76.8	2,835	78.9	2,900	81.0	2,970	83.2	3,045	85.3	3,115	64,900	103%
Ramshot Grand	74.6	2,810	76.7	2,885	78.8	2,955	80.8	3,025	82.9	3,100	64,900	101%
Vihtavuori N570	75.5	2,810	77.6	2,880	79.7	2,955	81.8	3,025	83.9	3,100	64,900	103%
Accurate MagPro	74.4	2,810	76.5	2,880	78.6	2,955	80.6	3,025	82.7	3,095	64,900	101%
Hodgdon Retumbo	75.3	2,815	77.4	2,880	79.5	2,955	81.6	3,025	83.7	3,095	64,900	104%
Alliant Reloder 23	68.4	2,825	70.3	2,890	72.2	2,955	74.1	3,025	76.0	3,090	64,900	98%
Ramshot Magnum	76.1	2,790	78.2	2,860	80.3	2,930	82.4	3,005	84.5	3,075	65,000	101%
Vihtavuori N565	72.2	2,805	74.2	2,875	76.2	2,940	78.2	3,010	80.2	3,075	64,900	101%
Hodgdon Hybrid 100V	64.1	2,815	65.9	2,880	67.7	2,945	69.4	3,005	71.2	3,070	64,900	95%
Alliant Reloder 25	72.5	2,785	74.5	2,855	76.5	2,925	78.5	2,995	80.5	3,065	62,300	105%
IMR 7828SSC	69.8	2,795	71.7	2,860	73.7	2,930	75.6	2,995	77.5	3,060	64,800	96%
Winchester Supreme 780	70.8	2,790	72.8	2,860	74.8	2,925	76.7	2,990	78.7	3,060	64,900	95%
Winchester StaBALL HD	76.1	2,770	78.2	2,840	80.3	2,910	82.5	2,985	84.6	3,055	64,800	103%
Hodgdon H1000	72.9	2,770	74.9	2,835	77.0	2,905	79.0	2,975	81.0	3,045	62,100	105%
IMR 8133	75.7	2,755	77.8	2,825	79.9	2,895	82.0	2,970	84.1	3,040	64,800	104%
IMR 7828	69.2	2,760	71.1	2,825	73.1	2,895	75.0	2,960	76.9	3,025	65,000	92%
Shooters World SW4350	66.9	2,770	68.8	2,835	70.6	2,895	72.5	2,960	74.3	3,025	64,800	96%
Accurate 3100	67.5	2,745	69.4	2,815	71.3	2,880	73.1	2,940	75.0	3,010	64,900	97%
Vihtavuori N165	68.6	2,735	70.5	2,795	72.4	2,860	74.3	2,920	76.2	2,985	64,800	98%

200 gr Bullet · 25" barrel

COAL: 3.450" • Bullet length: 1.489" • Seat depth: 0.619" • Usable capacity: 83.7 / 94.7 gr H_2O

Powder	STEP 1 · 90%		STEP 2		STEP 3		STEP 4		STEP 5 · LIMIT			
	gr	fps	gr	fps	gr	fps	gr	fps	gr	fps	psi	Fill
Alliant Reloder 26	71.2	2,810	73.2	2,875	75.2	2,945	77.1	3,010	79.1	3,080	64,800	95%
Reload Swiss RS76	75.8	2,765	77.9	2,835	80.0	2,900	82.1	2,970	84.2	3,040	64,900	101%
Vihtavuori N570	74.3	2,755	76.3	2,825	78.4	2,895	80.5	2,965	82.5	3,035	65,000	101%
Accurate MagPro	73.6	2,750	75.6	2,820	77.7	2,890	79.8	2,965	81.8	3,030	65,000	100%
Alliant Reloder 25	72.5	2,755	74.5	2,820	76.5	2,890	78.5	2,960	80.5	3,025	64,400	105%
Hodgdon Retumbo	74.3	2,750	76.4	2,815	78.4	2,885	80.5	2,955	82.6	3,025	64,900	103%
Ramshot Grand	73.7	2,750	75.8	2,820	77.8	2,885	79.9	2,955	81.9	3,025	64,800	100%
Hodgdon H1000	72.8	2,735	74.8	2,800	76.8	2,870	78.9	2,940	80.9	3,010	64,200	105%
Ramshot Magnum	75.1	2,730	77.2	2,800	79.3	2,870	81.3	2,940	83.4	3,010	64,800	100%
Alliant Reloder 19	67.0	2,750	68.8	2,810	70.7	2,875	72.6	2,945	74.4	3,005	65,000	94%
Alliant Reloder 23	67.2	2,745	69.1	2,810	71.0	2,875	72.8	2,935	74.7	3,000	64,800	97%
Reload Swiss RS70	67.6	2,740	69.5	2,805	71.3	2,865	73.2	2,935	75.1	3,000	65,000	91%
Vihtavuori N568	76.0	2,705	78.1	2,775	80.2	2,850	82.3	2,925	84.4	3,000	65,000	104%
Vihtavuori N560	68.9	2,745	70.8	2,805	72.7	2,870	74.6	2,930	76.5	2,990	64,800	96%
IMR 7828SSC	68.7	2,725	70.6	2,790	72.5	2,855	74.4	2,920	76.3	2,985	65,000	95%
Vihtavuori N565	70.4	2,730	72.4	2,795	74.3	2,855	76.3	2,925	78.2	2,985	64,800	98%
Winchester StaBALL HD	75.2	2,715	77.3	2,780	79.3	2,845	81.4	2,915	83.5	2,985	64,800	102%
Hodgdon H4831	68.3	2,725	70.2	2,785	72.1	2,850	74.0	2,915	75.9	2,980	64,900	97%
Norma URP	62.1	2,730	63.8	2,790	65.5	2,850	67.3	2,910	69.0	2,975	64,900	90%
Accurate 3100	66.4	2,675	68.3	2,740	70.1	2,805	72.0	2,870	73.8	2,930	64,800	96%

220 gr Bullet · 25" barrel

COAL: 3.545" • Bullet length: 1.589" • Seat depth: 0.624" • Usable capacity: 83.7 / 94.7 gr H_2O

Powder	STEP 1 · 90%		STEP 2		STEP 3		STEP 4		STEP 5 · LIMIT			
	gr	fps	gr	fps	gr	fps	gr	fps	gr	fps	psi	Fill
Alliant Reloder 26	69.1	2,680	71.0	2,740	72.9	2,800	74.9	2,870	76.8	2,930	64,800	92%
Accurate MagPro	72.1	2,650	74.1	2,715	76.1	2,780	78.1	2,845	80.1	2,915	64,900	98%
Alliant Reloder 25	71.1	2,650	73.1	2,715	75.0	2,775	77.0	2,845	79.0	2,910	65,000	103%
Reload Swiss RS76	74.1	2,645	76.1	2,710	78.2	2,775	80.3	2,840	82.3	2,905	65,000	99%
Vihtavuori N568	74.3	2,625	76.4	2,695	78.4	2,765	80.5	2,835	82.6	2,905	64,900	102%
Ramshot Grand	72.3	2,640	74.3	2,705	76.3	2,770	78.3	2,835	80.3	2,900	65,000	98%
Vihtavuori N570	71.7	2,640	73.7	2,705	75.7	2,770	77.7	2,835	79.7	2,900	64,800	98%
Ramshot Magnum	73.4	2,630	75.5	2,695	77.5	2,760	79.5	2,825	81.6	2,895	64,800	98%
Hodgdon H1000	71.4	2,635	73.4	2,700	75.3	2,760	77.3	2,825	79.3	2,890	64,900	103%
Hodgdon Retumbo	72.5	2,635	74.5	2,695	76.5	2,760	78.6	2,825	80.6	2,890	64,900	100%
Alliant Reloder 19	65.3	2,630	67.1	2,690	68.9	2,750	70.7	2,810	72.5	2,870	64,900	92%
IMR 8133	73.4	2,600	75.5	2,670	77.5	2,735	79.5	2,800	81.6	2,870	65,000	101%
Winchester StaBALL HD	73.4	2,600	75.5	2,665	77.5	2,730	79.5	2,790	81.6	2,860	64,900	99%
Norma MRP	66.9	2,615	68.8	2,675	70.6	2,735	72.5	2,795	74.3	2,855	65,000	92%
Alliant Reloder 23	65.2	2,610	67.0	2,670	68.8	2,730	70.6	2,785	72.4	2,845	64,800	94%
Winchester Supreme 780	67.7	2,600	69.6	2,665	71.5	2,725	73.3	2,785	75.2	2,845	64,900	90%
IMR 7828SSC	66.6	2,600	68.4	2,655	70.3	2,715	72.2	2,780	74.0	2,840	64,900	92%
Vihtavuori N565	67.4	2,595	69.3	2,655	71.2	2,715	73.0	2,770	74.9	2,830	64,900	94%
Shooters World SW4350	64.2	2,560	66.0	2,620	67.8	2,675	69.5	2,730	71.3	2,790	65,000	92%
Vihtavuori 24N41	74.3	2,525	76.3	2,585	78.4	2,650	80.5	2,720	82.5	2,785	64,900	100%

230 gr Bullet · 25" barrel

COAL: 3.596" • Bullet length: 1.728" • Seat depth: 0.712" • Usable capacity: 82.0 / 94.7 gr H_2O

Powder	STEP 1 · 90%		STEP 2		STEP 3		STEP 4		STEP 5 · LIMIT			
	gr	fps	gr	fps	gr	fps	gr	fps	gr	fps	psi	Fill
Alliant Reloder 26	67.5	2,615	69.4	2,675	71.3	2,735	73.1	2,795	75.0	2,860	65,000	92%
Vihtavuori N568	72.7	2,580	74.7	2,645	76.8	2,715	78.8	2,780	80.8	2,850	64,900	102%
Accurate MagPro	70.6	2,590	72.5	2,655	74.5	2,720	76.5	2,785	78.4	2,845	65,000	98%
Alliant Reloder 25	69.5	2,590	71.4	2,650	73.3	2,710	75.3	2,775	77.2	2,840	64,900	103%
Ramshot Grand	70.7	2,580	72.7	2,640	74.6	2,705	76.5	2,765	78.5	2,830	64,900	97%
Reload Swiss RS76	72.4	2,580	74.4	2,640	76.4	2,705	78.4	2,765	80.4	2,830	64,900	99%
Vihtavuori N570	69.9	2,580	71.9	2,645	73.8	2,705	75.8	2,770	77.7	2,830	64,800	97%
Hodgdon H1000	69.8	2,575	71.7	2,635	73.7	2,695	75.6	2,760	77.5	2,820	65,000	103%
Hodgdon Retumbo	70.9	2,570	72.9	2,635	74.8	2,695	76.8	2,760	78.8	2,820	64,900	100%
IMR 8133	71.8	2,545	73.8	2,610	75.8	2,670	77.8	2,735	79.8	2,800	65,000	101%
Alliant Reloder 22	64.4	2,555	66.2	2,610	68.0	2,670	69.8	2,730	71.6	2,790	64,900	93%
Winchester StaBALL HD	71.8	2,540	73.8	2,600	75.8	2,665	77.8	2,725	79.8	2,790	64,900	99%
Norma MRP	65.2	2,545	67.0	2,605	68.8	2,660	70.6	2,720	72.4	2,780	64,900	92%
Winchester Supreme 780	66.0	2,535	67.8	2,595	69.7	2,655	71.5	2,715	73.3	2,770	64,900	90%
Hodgdon H4831	64.7	2,530	66.5	2,585	68.3	2,645	70.1	2,700	71.9	2,760	64,900	94%
IMR 7828SSC	64.9	2,530	66.7	2,590	68.5	2,645	70.3	2,705	72.1	2,760	64,800	91%
Vihtavuori N565	65.5	2,525	67.3	2,585	69.2	2,640	71.0	2,700	72.8	2,755	64,800	93%
Vihtavuori N560	64.5	2,525	66.3	2,580	68.1	2,635	69.9	2,690	71.7	2,745	65,000	91%
IMR 7977	67.9	2,495	69.8	2,555	71.7	2,615	73.5	2,675	75.4	2,735	64,900	100%
Vihtavuori 24N41	72.5	2,470	74.5	2,530	76.5	2,595	78.6	2,660	80.6	2,725	65,000	100%

.300 Remington SAUM

Remington introduced the .300 Remington Short Action Ultra Magnum (.300 RSAUM) in 2001. It arrived shortly after Winchester launched its .300 Winchester Short Magnum (WSM). The case is a shortened version of the beltless rebated-rim .300 Remington Ultra Magnum. It is cut to a length of 2.015 inches so that the cartridge fits short bolt actions such as the Remington Model 700. The cartridge is standardized by SAAMI.

Remington offered factory loads with 150- to 200-grain bullets. Its 180-grain load is listed at about 2,950 fps from a 24-inch barrel. In practical terms the .300 RSAUM and .300 WSM perform almost identically. The WSM reached the market first and won wider acceptance. It also has far better availability of rifles, ammunition and components. The .300 RSAUM remains a niche cartridge that is supported mainly by handloaders.

Cartridge specifications	
Bullet Diameter	**0.308" (7.82 mm)**
Max Case Length	**2.015" (51.18 mm)**
Case Trim Length	**2.005" (50.93 mm)**
Max COAL	**2.825" (71.76 mm)**
Primer Pocket	**Large Rifle**
Standard Twist	**1:10"**
Case Capacity	**73.6 gr H_2O**
Max Pressure	**65,000 psi (SAAMI)**

110 gr Bullet · 25" barrel

COAL: 2.518" • Bullet length: 0.811" • Seat depth: 0.308" • Usable capacity: 68.1 / 73.6 gr H_2O

Powder	STEP 1 · 90%		STEP 2		STEP 3		STEP 4		STEP 5 · LIMIT			
	gr	fps	gr	fps	gr	fps	gr	fps	gr	fps	psi	Fill
Hodgdon Leverevolution	60.7	3,530	62.4	3,610	64.1	3,695	65.7	3,770	67.4	3,855	64,800	95%
Reload Swiss RS52	60.3	3,450	62.0	3,535	63.6	3,610	65.3	3,695	67.0	3,780	64,900	103%
Hodgdon CFE 223	61.7	3,450	63.4	3,530	65.1	3,610	66.8	3,695	68.5	3,775	65,000	102%
Hodgdon BL-C(2)	60.7	3,445	62.4	3,525	64.1	3,610	65.7	3,690	67.4	3,770	64,800	99%
Norma 201	56.8	3,435	58.4	3,515	60.0	3,595	61.5	3,670	63.1	3,755	64,900	103%
Accurate 2520	58.4	3,445	60.0	3,520	61.7	3,600	63.3	3,675	64.9	3,750	64,900	98%
Vihtavuori N540	59.5	3,440	61.1	3,515	62.8	3,595	64.4	3,670	66.1	3,750	64,800	103%
Vihtavuori N140	59.4	3,425	61.0	3,500	62.7	3,580	64.3	3,655	66.0	3,740	64,800	99%
IMR 4064	59.3	3,420	61.0	3,500	62.6	3,580	64.3	3,660	65.9	3,735	64,900	104%
IMR 4895	58.2	3,420	59.8	3,495	61.5	3,575	63.1	3,655	64.7	3,730	64,900	98%
Shooters World Match Rifle	58.3	3,410	59.9	3,490	61.5	3,565	63.2	3,650	64.8	3,730	64,800	98%
Alliant Reloder 15	59.5	3,400	61.1	3,475	62.8	3,560	64.4	3,635	66.1	3,715	64,900	104%
Hodgdon H4895	56.8	3,415	58.4	3,490	60.0	3,565	61.5	3,640	63.1	3,715	64,800	96%
Hodgdon Varget	58.4	3,395	60.0	3,470	61.7	3,555	63.3	3,630	64.9	3,710	64,700	99%
Winchester 748	59.6	3,380	61.3	3,460	62.9	3,535	64.5	3,615	66.2	3,695	65,000	100%
Alliant AR-Comp	54.8	3,400	56.3	3,470	57.8	3,545	59.4	3,620	60.9	3,690	64,800	96%
Alliant Power Pro Varmint	57.1	3,380	58.7	3,460	60.3	3,535	61.8	3,605	63.4	3,685	64,900	98%
Shooters World The Creed	59.1	3,365	60.8	3,450	62.4	3,525	64.0	3,600	65.7	3,685	64,900	100%
Hodgdon Benchmark	54.6	3,380	56.1	3,450	57.7	3,525	59.2	3,600	60.7	3,670	64,900	98%
Shooters World Tactical Rifle	55.3	3,335	56.8	3,410	58.3	3,480	59.9	3,560	61.4	3,635	64,900	93%

125 gr Bullet · 25" barrel

COAL: 2.700" • Bullet length: 1.086" • Seat depth: 0.401" • Usable capacity: 66.4 / 73.6 gr H_2O

Powder	STEP 1 · 90%		STEP 2		STEP 3		STEP 4		STEP 5 · LIMIT			
	gr	fps	gr	fps	gr	fps	gr	fps	gr	fps	psi	Fill
Hodgdon Leverevolution	58.1	3,325	59.7	3,400	61.3	3,475	63.0	3,555	64.6	3,630	64,800	93%
Reload Swiss RS52	58.0	3,270	59.6	3,345	61.2	3,420	62.8	3,500	64.4	3,575	64,900	102%
Hodgdon BL-C(2)	58.4	3,260	60.0	3,335	61.7	3,415	63.3	3,495	64.9	3,570	65,000	98%
Hodgdon CFE 223	59.1	3,255	60.8	3,335	62.4	3,405	64.0	3,480	65.7	3,560	64,800	101%
Norma 201	54.4	3,255	55.9	3,330	57.4	3,400	58.9	3,475	60.4	3,550	64,900	101%
Alliant Power Pro 2000-MR	59.7	3,220	61.4	3,295	63.0	3,370	64.7	3,450	66.3	3,525	63,600	105%
IMR 4064	56.5	3,225	58.1	3,300	59.6	3,370	61.2	3,440	62.8	3,515	64,900	101%
Hodgdon Varget	56.0	3,215	57.5	3,285	59.1	3,360	60.7	3,435	62.2	3,505	64,900	97%
Hodgdon H414	61.6	3,180	63.3	3,260	65.0	3,340	66.7	3,420	68.4	3,500	64,300	105%
IMR 4895	55.4	3,210	57.0	3,285	58.5	3,355	60.0	3,425	61.6	3,500	65,000	96%
Vihtavuori N540	56.4	3,220	58.0	3,290	59.5	3,355	61.1	3,430	62.7	3,500	64,800	100%
Winchester 748	57.2	3,200	58.8	3,275	60.4	3,350	61.9	3,420	63.5	3,495	64,800	98%
Alliant Reloder 15	56.6	3,205	58.2	3,275	59.8	3,350	61.3	3,420	62.9	3,490	64,900	101%
Hodgdon H4895	54.2	3,205	55.7	3,275	57.2	3,345	58.7	3,415	60.2	3,485	64,800	94%
Shooters World The Creed	56.6	3,185	58.2	3,260	59.8	3,335	61.3	3,405	62.9	3,480	64,900	98%
Reload Swiss RS40	50.9	3,180	52.3	3,250	53.8	3,320	55.2	3,385	56.6	3,455	64,800	90%
Alliant AR-Comp	52.1	3,170	53.5	3,235	55.0	3,305	56.5	3,375	57.9	3,440	64,900	93%
Hodgdon H4350	62.2	3,115	63.9	3,195	65.7	3,280	67.4	3,360	69.1	3,440	62,700	105%
Reload Swiss RS60	60.9	3,110	62.6	3,190	64.3	3,275	66.0	3,355	67.7	3,440	61,800	105%
Alliant Reloder 17	58.5	3,025	60.1	3,100	61.8	3,180	63.4	3,255	65.0	3,330	64,800	98%

150 gr Bullet · 25" barrel

COAL: 2.545" • Bullet length: 1.174" • Seat depth: 0.644" • Usable capacity: 62.8 / 73.6 gr H_2O

Powder	STEP 1 · 90%		STEP 2		STEP 3		STEP 4		STEP 5 · LIMIT			
	gr	fps	gr	fps	gr	fps	gr	fps	gr	fps	psi	Fill
Hodgdon Leverevolution	53.8	3,020	55.3	3,085	56.8	3,155	58.3	3,225	59.8	3,290	64,900	91%
Winchester StaBALL 6.5	58.9	2,975	60.5	3,045	62.2	3,120	63.8	3,190	65.4	3,260	62,100	105%
Hodgdon BL-C(2)	54.4	2,980	55.9	3,050	57.4	3,120	58.9	3,185	60.4	3,255	65,000	96%
Reload Swiss RS52	53.8	2,980	55.3	3,050	56.8	3,120	58.3	3,190	59.8	3,255	64,700	100%
Alliant Power Pro 2000-MR	55.8	2,960	57.3	3,030	58.9	3,100	60.5	3,170	62.0	3,240	64,800	104%
Hodgdon CFE 223	54.8	2,960	56.3	3,030	57.8	3,095	59.4	3,170	60.9	3,235	65,000	99%
Norma 201	50.2	2,970	51.6	3,035	53.0	3,100	54.4	3,170	55.8	3,235	65,000	99%
Hodgdon H4350	58.2	2,920	59.8	2,990	61.5	3,070	63.1	3,140	64.7	3,215	64,800	104%
Hodgdon Varget	51.7	2,925	53.1	2,985	54.5	3,050	56.0	3,120	57.4	3,185	64,900	95%
IMR 4064	51.9	2,925	53.4	2,995	54.8	3,055	56.3	3,125	57.7	3,185	65,000	98%
Winchester StaBALL Match	52.8	2,920	54.3	2,985	55.8	3,055	57.2	3,115	58.7	3,185	64,900	105%
Reload Swiss RS50	53.6	2,905	55.1	2,970	56.6	3,035	58.1	3,105	59.6	3,170	65,000	100%
Alliant Reloder 15	51.9	2,900	53.4	2,970	54.8	3,030	56.3	3,095	57.7	3,160	65,000	98%
IMR 4895	50.9	2,905	52.3	2,970	53.7	3,035	55.1	3,095	56.5	3,160	65,000	93%
Ramshot Big Game	55.1	2,885	56.6	2,950	58.2	3,020	59.7	3,085	61.2	3,150	64,800	99%
Hodgdon H4895	49.9	2,900	51.3	2,960	52.6	3,020	54.0	3,085	55.4	3,145	65,000	91%
Ramshot TAC	50.0	2,895	51.4	2,960	52.8	3,025	54.1	3,080	55.5	3,145	64,900	94%
Vihtavuori N540	51.6	2,895	53.0	2,955	54.5	3,020	55.9	3,085	57.3	3,145	64,800	97%
Norma 202	49.9	2,865	51.3	2,925	52.6	2,985	54.0	3,045	55.4	3,110	64,800	96%
Alliant Reloder 17	54.6	2,810	56.1	2,875	57.7	2,950	59.2	3,020	60.7	3,090	65,000	97%

165 gr Bullet · 25" barrel

COAL: 2.725" • Bullet length: 1.274" • Seat depth: 0.564" • Usable capacity: 63.5 / 73.6 gr H_2O

Powder	STEP 1 · 90%		STEP 2		STEP 3		STEP 4		STEP 5 · LIMIT			
	gr	fps	gr	fps	gr	fps	gr	fps	gr	fps	psi	Fill
Hodgdon SUPERFORMANCE	61.3	2,885	63.0	2,955	64.7	3,030	66.4	3,105	68.1	3,180	64,900	105%
Winchester StaBALL 6.5	58.9	2,895	60.5	2,960	62.2	3,030	63.8	3,100	65.4	3,170	64,900	104%
Vihtavuori N550	56.1	2,880	57.6	2,945	59.2	3,010	60.8	3,075	62.3	3,140	65,000	103%
Hodgdon Leverevolution	52.7	2,875	54.2	2,940	55.6	3,000	57.0	3,065	58.5	3,130	65,000	88%
Reload Swiss RS60	57.2	2,850	58.8	2,920	60.4	2,990	61.9	3,060	63.5	3,130	64,800	103%
Reload Swiss RS52	53.0	2,855	54.5	2,920	56.0	2,990	57.4	3,050	58.9	3,115	65,000	97%
Hodgdon BL-C(2)	53.5	2,850	55.0	2,915	56.5	2,980	57.9	3,045	59.4	3,110	64,700	94%
Alliant Power Pro 2000-MR	54.9	2,840	56.4	2,905	58.0	2,970	59.5	3,035	61.0	3,105	64,900	101%
Winchester 760	56.7	2,815	58.3	2,885	59.9	2,955	61.4	3,020	63.0	3,090	64,700	102%
Alliant Power Pro 4000-MR	58.9	2,785	60.5	2,850	62.2	2,925	63.8	2,995	65.4	3,065	63,000	105%
IMR 4955	59.6	2,775	61.3	2,850	62.9	2,915	64.5	2,985	66.2	3,060	63,200	105%
Vihtavuori N150	51.7	2,785	53.1	2,845	54.5	2,905	56.0	2,970	57.4	3,035	64,800	101%
Hodgdon Varget	50.6	2,785	52.0	2,850	53.4	2,910	54.8	2,970	56.2	3,030	64,900	92%
IMR 4064	50.7	2,785	52.1	2,845	53.5	2,905	54.9	2,965	56.3	3,030	64,800	95%
Shooters World The Creed	51.1	2,765	52.5	2,825	54.0	2,890	55.4	2,950	56.8	3,010	65,000	93%
Vihtavuori N140	50.8	2,765	52.2	2,825	53.6	2,885	55.0	2,950	56.4	3,010	64,900	91%
Alliant Reloder 15	50.5	2,755	51.9	2,815	53.3	2,875	54.7	2,935	56.1	2,995	64,800	94%
Shooters World Long Rifle	53.4	2,740	54.9	2,805	56.3	2,865	57.8	2,930	59.3	2,995	64,900	102%
Alliant Reloder 17	53.9	2,720	55.4	2,785	56.9	2,850	58.4	2,915	59.9	2,980	64,800	95%
Hodgdon H4895	48.6	2,745	50.0	2,805	51.3	2,865	52.6	2,920	54.0	2,980	64,900	88%

180 gr Bullet · 25" barrel

COAL: 2.720" • Bullet length: 1.322" • Seat depth: 0.617" • Usable capacity: 62.5 / 73.6 gr H_2O

Powder	STEP 1 · 90%		STEP 2		STEP 3		STEP 4		STEP 5 · LIMIT			
	gr	fps	gr	fps	gr	fps	gr	fps	gr	fps	psi	Fill
Hodgdon SUPERFORMANCE	59.7	2,780	61.4	2,850	63.0	2,920	64.7	2,990	66.3	3,060	65,000	104%
Winchester StaBALL 6.5	57.1	2,765	58.7	2,830	60.3	2,895	61.8	2,960	63.4	3,025	64,800	102%
Reload Swiss RS60	55.6	2,740	57.1	2,805	58.7	2,875	60.3	2,945	61.8	3,010	64,900	102%
Accurate 4350	56.5	2,725	58.1	2,790	59.6	2,855	61.2	2,920	62.8	2,990	61,800	105%
IMR 4955	58.5	2,700	60.1	2,765	61.8	2,840	63.4	2,905	65.0	2,975	64,800	105%
Vihtavuori N550	53.8	2,730	55.3	2,790	56.8	2,850	58.3	2,915	59.8	2,975	65,000	100%
Hodgdon H414	55.0	2,710	56.5	2,775	58.0	2,835	59.6	2,905	61.1	2,970	64,800	100%
Accurate 2700	54.6	2,705	56.1	2,770	57.7	2,835	59.2	2,900	60.7	2,960	65,000	99%
Hodgdon H4350	55.2	2,700	56.7	2,765	58.3	2,830	59.8	2,895	61.3	2,960	64,700	99%
Winchester 760	55.1	2,700	56.6	2,765	58.2	2,830	59.7	2,895	61.2	2,960	64,900	101%
IMR 4007 SSC	54.5	2,675	56.0	2,740	57.5	2,800	59.1	2,870	60.6	2,935	64,900	104%
IMR 4350	55.0	2,680	56.5	2,745	58.0	2,805	59.6	2,875	61.1	2,935	61,800	105%
Norma 204	55.0	2,645	56.5	2,705	58.0	2,770	59.6	2,835	61.1	2,900	64,900	103%
Winchester 748	50.4	2,660	51.8	2,720	53.2	2,780	54.6	2,840	56.0	2,900	64,800	92%
Alliant Reloder 16	53.1	2,655	54.6	2,715	56.0	2,770	57.5	2,835	59.0	2,895	65,000	105%
Ramshot Hunter	55.6	2,635	57.1	2,695	58.7	2,760	60.3	2,830	61.8	2,890	61,800	105%
Hodgdon Varget	48.8	2,650	50.1	2,705	51.5	2,765	52.9	2,825	54.2	2,880	64,800	90%
Vihtavuori N150	49.8	2,650	51.2	2,705	52.5	2,760	53.9	2,820	55.3	2,880	64,900	99%
IMR 4064	48.9	2,650	50.3	2,710	51.6	2,765	52.9	2,820	54.3	2,875	64,900	93%
Alliant Reloder 15	48.6	2,615	50.0	2,675	51.3	2,730	52.6	2,785	54.0	2,845	65,000	92%

200 gr Bullet · 25" barrel

COAL: 2.825" • Bullet length: 1.431" • Seat depth: 0.621" • Usable capacity: 62.6 / 73.6 gr H_2O

Powder	STEP 1 · 90%		STEP 2		STEP 3		STEP 4		STEP 5 · LIMIT			
	gr	fps	gr	fps	gr	fps	gr	fps	gr	fps	psi	Fill
Hodgdon SUPERFORMANCE	58.2	2,650	59.8	2,715	61.5	2,785	63.1	2,850	64.7	2,915	64,900	101%
Accurate 4350	56.0	2,630	57.5	2,690	59.1	2,755	60.7	2,820	62.2	2,885	64,900	104%
Reload Swiss RS62	56.8	2,610	58.4	2,675	60.0	2,740	61.5	2,800	63.1	2,870	64,000	105%
Reload Swiss RS70	58.3	2,605	59.9	2,665	61.5	2,730	63.2	2,800	64.8	2,870	64,800	104%
Reload Swiss RS60	54.3	2,615	55.8	2,680	57.3	2,740	58.8	2,800	60.3	2,865	64,900	99%
Norma URP	53.8	2,595	55.3	2,660	56.8	2,720	58.3	2,785	59.8	2,850	62,500	105%
Winchester StaBALL 6.5	55.4	2,610	56.9	2,670	58.5	2,730	60.0	2,790	61.5	2,850	64,800	99%
Alliant Power Pro 4000-MR	56.5	2,575	58.1	2,640	59.6	2,700	61.2	2,765	62.8	2,830	65,000	102%
IMR 4350	54.2	2,575	55.7	2,635	57.2	2,695	58.7	2,755	60.2	2,820	64,900	103%
Hodgdon H414	53.5	2,570	55.0	2,630	56.5	2,690	57.9	2,750	59.4	2,810	64,800	97%
IMR 7828	58.7	2,545	60.3	2,610	62.0	2,675	63.6	2,740	65.2	2,805	63,200	105%
Hodgdon H4350	53.4	2,560	54.9	2,620	56.3	2,675	57.8	2,735	59.3	2,800	64,800	96%
Ramshot Hunter	55.2	2,545	56.7	2,605	58.3	2,670	59.8	2,730	61.3	2,790	64,800	104%
Reload Swiss RS52	49.8	2,565	51.2	2,620	52.5	2,675	53.9	2,735	55.3	2,790	64,800	93%
IMR 4007 SSC	53.1	2,545	54.6	2,605	56.0	2,660	57.5	2,720	59.0	2,785	64,700	101%
Vihtavuori N550	51.4	2,545	52.8	2,600	54.3	2,660	55.7	2,715	57.1	2,770	64,900	96%
Hodgdon H380	51.4	2,520	52.8	2,575	54.3	2,635	55.7	2,690	57.1	2,750	64,900	97%
Alliant Reloder 17	51.1	2,485	52.5	2,545	54.0	2,605	55.4	2,665	56.8	2,725	64,800	91%
Alliant Reloder 16	51.1	2,495	52.5	2,550	54.0	2,605	55.4	2,665	56.8	2,720	64,900	101%
IMR 4451	52.0	2,475	53.5	2,535	54.9	2,590	56.3	2,650	57.8	2,710	64,800	96%

210 gr Bullet · 25" barrel

COAL: 2.825" • Bullet length: 1.469" • Seat depth: 0.659" • Usable capacity: 61.8 / 73.6 gr H_2O

Powder	STEP 1 · 90%		STEP 2		STEP 3		STEP 4		STEP 5 · LIMIT			
	gr	fps	gr	fps	gr	fps	gr	fps	gr	fps	psi	Fill
Hodgdon SUPERFORMANCE	57.1	2,590	58.7	2,655	60.3	2,720	61.8	2,780	63.4	2,845	64,800	100%
Reload Swiss RS62	56.0	2,560	57.5	2,620	59.1	2,685	60.7	2,750	62.2	2,815	64,700	105%
Accurate 4350	54.8	2,560	56.3	2,620	57.8	2,680	59.4	2,745	60.9	2,805	64,700	103%
Reload Swiss RS70	57.2	2,545	58.8	2,610	60.4	2,670	62.0	2,735	63.6	2,805	64,800	104%
Norma URP	53.2	2,555	54.7	2,620	56.2	2,680	57.6	2,740	59.1	2,800	64,000	105%
Reload Swiss RS60	53.2	2,550	54.7	2,610	56.2	2,675	57.6	2,730	59.1	2,795	64,800	98%
Vihtavuori N555	54.4	2,560	55.9	2,615	57.4	2,675	58.9	2,735	60.4	2,795	62,100	105%
Winchester StaBALL 6.5	54.3	2,540	55.8	2,600	57.3	2,660	58.8	2,715	60.3	2,775	65,000	98%
Alliant Power Pro 4000-MR	55.4	2,515	57.0	2,575	58.5	2,635	60.0	2,695	61.6	2,760	64,900	102%
IMR 4350	53.0	2,510	54.5	2,570	56.0	2,630	57.4	2,685	58.9	2,745	65,000	102%
IMR 4831	54.4	2,495	55.9	2,555	57.4	2,620	58.9	2,680	60.4	2,740	61,600	105%
Hodgdon H414	52.4	2,505	53.9	2,565	55.3	2,620	56.8	2,680	58.2	2,735	64,900	96%
Hodgdon H4350	52.2	2,495	53.7	2,555	55.1	2,610	56.5	2,665	58.0	2,725	64,800	95%
Winchester 760	52.5	2,495	54.0	2,555	55.4	2,610	56.8	2,665	58.3	2,725	64,900	97%
Ramshot Hunter	54.1	2,485	55.6	2,540	57.1	2,600	58.6	2,660	60.1	2,720	64,800	103%
Vihtavuori N160	53.7	2,455	55.2	2,515	56.7	2,575	58.2	2,630	59.7	2,690	62,400	105%
Norma 204	52.7	2,455	54.2	2,515	55.6	2,570	57.0	2,625	58.5	2,685	64,900	100%
Vihtavuori N550	50.1	2,470	51.5	2,525	52.9	2,575	54.3	2,630	55.7	2,685	65,000	95%
Hodgdon H4831SC	55.2	2,435	56.7	2,495	58.3	2,555	59.8	2,615	61.3	2,675	64,800	100%
Alliant Reloder 17	50.1	2,425	51.5	2,485	52.9	2,540	54.3	2,600	55.7	2,655	64,800	90%

220 gr Bullet · 25" barrel

COAL: 2.700" • Bullet length: 1.488" • Seat depth: 0.803" • Usable capacity: 59.2 / 73.6 gr H_2O

Powder	STEP 1 · 90%		STEP 2		STEP 3		STEP 4		STEP 5 · LIMIT			
	gr	fps	gr	fps	gr	fps	gr	fps	gr	fps	psi	Fill
Hodgdon SUPERFORMANCE	55.0	2,505	56.5	2,565	58.0	2,625	59.6	2,690	61.1	2,755	64,800	101%
Accurate 4350	52.8	2,480	54.3	2,540	55.8	2,600	57.2	2,655	58.7	2,720	64,900	104%
Reload Swiss RS62	53.7	2,470	55.2	2,530	56.7	2,590	58.2	2,650	59.7	2,715	64,100	105%
Reload Swiss RS70	55.1	2,465	56.6	2,525	58.2	2,590	59.7	2,650	61.2	2,710	64,700	104%
Reload Swiss RS60	51.2	2,470	52.6	2,525	54.0	2,580	55.5	2,645	56.9	2,705	64,700	99%
Norma URP	50.9	2,465	52.3	2,520	53.8	2,585	55.2	2,645	56.6	2,700	63,200	105%
Vihtavuori N555	52.1	2,470	53.5	2,525	55.0	2,585	56.5	2,645	57.9	2,700	61,400	105%
IMR 4955	54.1	2,450	55.6	2,510	57.1	2,570	58.6	2,630	60.1	2,690	64,900	102%
Winchester StaBALL 6.5	52.3	2,455	53.8	2,515	55.2	2,570	56.6	2,625	58.1	2,685	65,000	99%
IMR 7828	55.5	2,420	57.0	2,480	58.6	2,540	60.2	2,605	61.7	2,665	64,100	105%
IMR 4350	50.9	2,420	52.3	2,480	53.8	2,540	55.2	2,595	56.6	2,650	64,900	103%
Hodgdon H4350	50.2	2,410	51.6	2,465	53.0	2,525	54.4	2,580	55.8	2,635	65,000	95%
Ramshot Hunter	52.1	2,405	53.5	2,460	55.0	2,515	56.5	2,575	57.9	2,635	64,800	104%
Winchester 760	50.5	2,410	51.9	2,465	53.3	2,520	54.7	2,580	56.1	2,635	64,900	97%
IMR 4007 SSC	50.1	2,400	51.5	2,455	52.9	2,510	54.3	2,570	55.7	2,625	64,800	101%
Norma 204	50.7	2,375	52.1	2,430	53.5	2,485	54.9	2,540	56.3	2,595	64,800	100%
Vihtavuori N160	51.6	2,370	53.0	2,425	54.5	2,485	55.9	2,540	57.3	2,595	62,100	105%
Hodgdon H4831SC	53.2	2,360	54.7	2,420	56.2	2,475	57.6	2,535	59.1	2,590	65,000	100%
Vihtavuori N550	48.2	2,385	49.5	2,435	50.9	2,490	52.2	2,540	53.5	2,590	64,700	95%
Alliant Reloder 17	48.2	2,345	49.6	2,405	50.9	2,455	52.3	2,515	53.6	2,570	64,700	91%

230 gr Bullet · 25" barrel

COAL: 2.825" • Bullet length: 1.681" • Seat depth: 0.871" • Usable capacity: 58.2 / 73.6 gr H_2O

Powder	STEP 1 · 90%		STEP 2		STEP 3		STEP 4		STEP 5 · LIMIT			
	gr	fps	gr	fps	gr	fps	gr	fps	gr	fps	psi	Fill
Hodgdon SUPERFORMANCE	53.8	2,445	55.3	2,505	56.8	2,565	58.3	2,625	59.8	2,685	64,800	101%
Reload Swiss RS62	52.8	2,420	54.3	2,480	55.8	2,540	57.2	2,600	58.7	2,660	64,800	105%
Accurate 4350	51.7	2,420	53.1	2,475	54.5	2,530	56.0	2,590	57.4	2,645	64,900	103%
Norma URP	50.0	2,415	51.4	2,475	52.8	2,530	54.2	2,590	55.6	2,645	64,100	105%
Reload Swiss RS70	53.9	2,405	55.4	2,465	56.9	2,525	58.4	2,585	59.9	2,645	64,700	104%
Vihtavuori N555	51.2	2,420	52.6	2,475	54.0	2,530	55.5	2,590	56.9	2,645	62,800	105%
Reload Swiss RS60	50.1	2,405	51.5	2,465	52.9	2,520	54.3	2,580	55.7	2,635	64,800	99%
IMR 7828	54.5	2,375	56.0	2,430	57.5	2,490	59.0	2,550	60.5	2,610	64,800	105%
Winchester StaBALL 6.5	51.0	2,385	52.4	2,440	53.9	2,500	55.3	2,555	56.7	2,610	64,800	98%
Hodgdon H414	49.2	2,350	50.6	2,410	52.0	2,465	53.3	2,515	54.7	2,575	64,700	96%
IMR 4350	49.7	2,360	51.1	2,415	52.5	2,470	53.8	2,520	55.2	2,575	64,800	102%
Ramshot Hunter	51.0	2,345	52.4	2,400	53.9	2,455	55.3	2,510	56.7	2,570	65,000	103%
Hodgdon H4350	49.0	2,350	50.4	2,405	51.7	2,455	53.0	2,505	54.4	2,565	64,800	94%
Winchester 760	49.3	2,345	50.7	2,400	52.0	2,450	53.4	2,505	54.8	2,565	64,800	97%
Accurate 2700	49.0	2,345	50.4	2,400	51.7	2,450	53.0	2,505	54.4	2,560	64,900	95%
Vihtavuori N160	50.7	2,320	52.1	2,375	53.5	2,430	54.9	2,485	56.3	2,540	63,200	105%
Alliant Power Pro 2000-MR	47.3	2,330	48.6	2,380	49.9	2,430	51.2	2,485	52.5	2,535	64,900	95%
Hodgdon H4831SC	52.0	2,300	53.5	2,360	54.9	2,415	56.3	2,470	57.8	2,530	64,900	100%
Alliant Reloder 17	47.3	2,295	48.6	2,345	49.9	2,400	51.2	2,455	52.5	2,505	64,900	91%
IMR 4451	48.0	2,275	49.3	2,325	50.6	2,380	52.0	2,435	53.3	2,485	64,900	95%

.300 Remington Ultra Magnum

Remington introduced the .300 Remington Ultra Magnum (.300 RUM) in 1999 as the first of its Ultra Magnum cartridges. The beltless rebated-rim case traces back to the .404 Jeffery. The link runs through earlier work on the Canadian Magnum cartridges by Aubrey White and Noburo Uno of North American Shooting Systems. The case is full magnum length and requires a long action.

Remington's full-power Swift Scirocco loads drive a 150-grain bullet at about 3,450 fps and a 180-grain bullet at about 3,250 fps. The cartridge is used mainly for long-range hunting of elk, moose and other large game. Remington also offered reduced-power loadings to tame recoil. The same case design was adapted to other calibers. These include the 7mm, .338 and .375 Remington Ultra Magnums. The case also served as the parent of the Nosler family of cartridges. Ammunition remains in production.

Cartridge specifications	
Bullet Diameter	**0.308" (7.82 mm)**
Max Case Length	**2.850" (72.39 mm)**
Case Trim Length	**2.840" (72.14 mm)**
Max COAL	**3.600" (91.44 mm)**
Primer Pocket	**Large Rifle**
Standard Twist	**1:10"**
Case Capacity	**115.7 gr H_2O**
Max Pressure	**65,000 psi (SAAMI)**

125 gr Bullet · 25" barrel

COAL: 3.575" • Bullet length: 1.083" • Seat depth: 0.357" • Usable capacity: 109.3 / 115.7 gr H_2O

Powder	STEP 1 · 90%		STEP 2		STEP 3		STEP 4		STEP 5 · LIMIT			
	gr	fps	gr	fps	gr	fps	gr	fps	gr	fps	psi	Fill
Vihtavuori N560	93.2	3,525	95.8	3,610	98.4	3,695	101.0	3,780	103.6	3,865	64,900	99%
Alliant Reloder 26	93.2	3,485	95.8	3,570	98.3	3,655	100.9	3,745	103.5	3,835	65,000	95%
Hodgdon Retumbo	98.3	3,465	101.0	3,550	103.8	3,645	106.5	3,735	109.2	3,830	65,000	104%
Alliant Reloder 22	90.4	3,460	92.9	3,545	95.4	3,630	97.9	3,715	100.4	3,805	64,900	98%
Accurate 4350	84.7	3,475	87.0	3,550	89.4	3,630	91.8	3,710	94.1	3,790	65,000	90%
Alliant Reloder 23	88.3	3,460	90.8	3,540	93.2	3,620	95.6	3,700	98.1	3,785	64,900	97%
Hodgdon SUPERFORMANCE	86.6	3,455	89.0	3,540	91.4	3,620	93.8	3,705	96.2	3,785	64,900	86%
Reload Swiss RS76	97.4	3,410	100.1	3,500	102.8	3,585	105.5	3,670	108.2	3,760	64,900	100%
Vihtavuori N170	96.2	3,420	98.9	3,500	101.6	3,580	104.2	3,660	106.9	3,745	64,900	102%
Alliant Reloder 25	94.1	3,385	96.7	3,470	99.3	3,560	101.9	3,645	104.5	3,735	64,900	104%
IMR 4831	85.2	3,405	87.6	3,490	90.0	3,570	92.3	3,650	94.7	3,735	64,900	93%
Hodgdon H1000	95.1	3,370	97.8	3,460	100.4	3,545	103.0	3,635	105.7	3,730	64,300	105%
Norma MRP	89.2	3,395	91.7	3,480	94.2	3,560	96.6	3,640	99.1	3,725	64,900	94%
Ramshot Hunter	84.9	3,415	87.3	3,495	89.6	3,570	92.0	3,650	94.3	3,725	64,900	92%
Hodgdon H4831SC	88.3	3,380	90.8	3,460	93.2	3,540	95.6	3,620	98.1	3,705	64,800	90%
Vihtavuori N165	90.1	3,380	92.6	3,460	95.1	3,540	97.6	3,620	100.1	3,705	64,900	98%
Winchester Supreme 780	91.5	3,360	94.0	3,445	96.6	3,530	99.2	3,620	101.7	3,705	65,000	94%
Hodgdon H4831	89.2	3,370	91.7	3,450	94.2	3,535	96.6	3,615	99.1	3,700	65,000	97%
IMR 7828	90.5	3,340	93.0	3,425	95.5	3,510	98.1	3,595	100.6	3,680	64,800	93%
Vihtavuori N160	84.2	3,360	86.5	3,430	88.9	3,510	91.3	3,590	93.6	3,665	64,800	93%

150 gr Bullet · 25" barrel

COAL: 3.355" • Bullet length: 1.218" • Seat depth: 0.713" • Usable capacity: 104.0 / 115.7 gr H_2O

Powder	STEP 1 · 90%		STEP 2		STEP 3		STEP 4		STEP 5 · LIMIT			
	gr	fps	gr	fps	gr	fps	gr	fps	gr	fps	psi	Fill
Hodgdon Retumbo	92.5	3,245	95.1	3,330	97.7	3,410	100.2	3,490	102.8	3,580	64,800	103%
Alliant Reloder 26	87.2	3,255	89.6	3,330	92.1	3,415	94.5	3,490	96.9	3,570	64,900	94%
Vihtavuori N560	86.4	3,255	88.8	3,330	91.2	3,405	93.6	3,480	96.0	3,555	64,900	96%
Alliant Reloder 22	84.6	3,235	86.9	3,305	89.3	3,385	91.7	3,465	94.0	3,540	64,900	96%
Vihtavuori N570	92.5	3,200	95.1	3,285	97.7	3,370	100.2	3,455	102.8	3,540	65,000	102%
Alliant Reloder 23	82.5	3,210	84.8	3,280	87.1	3,355	89.4	3,430	91.7	3,505	64,800	96%
Hodgdon H1000	89.7	3,180	92.2	3,260	94.7	3,340	97.2	3,425	99.7	3,505	65,000	104%
Hodgdon Hybrid 100V	77.8	3,215	80.0	3,290	82.1	3,360	84.3	3,435	86.4	3,505	64,900	93%
Reload Swiss RS76	91.6	3,185	94.1	3,265	96.7	3,345	99.3	3,425	101.8	3,505	64,900	99%
Alliant Reloder 25	88.5	3,180	91.0	3,260	93.4	3,340	95.8	3,420	98.3	3,500	64,900	103%
IMR 7977	89.6	3,170	92.1	3,250	94.6	3,330	97.1	3,410	99.6	3,495	65,000	104%
Ramshot Magnum	92.3	3,165	94.9	3,245	97.4	3,325	100.0	3,410	102.6	3,495	64,900	99%
Norma URP	77.0	3,185	79.1	3,260	81.3	3,335	83.4	3,405	85.5	3,475	64,800	90%
Vihtavuori N565	87.1	3,155	89.5	3,230	91.9	3,310	94.4	3,390	96.8	3,470	64,800	98%
Hodgdon H4831	83.3	3,145	85.6	3,220	87.9	3,290	90.2	3,365	92.5	3,445	64,900	95%
Ramshot Hunter	79.4	3,160	81.6	3,230	83.8	3,300	86.0	3,375	88.2	3,445	65,000	90%
IMR 7828	84.4	3,135	86.8	3,210	89.1	3,285	91.5	3,365	93.8	3,440	64,900	91%
Winchester StaBALL HD	90.9	3,120	93.4	3,195	96.0	3,275	98.5	3,355	101.0	3,435	64,900	99%
Vihtavuori N165	83.8	3,130	86.1	3,200	88.4	3,275	90.8	3,350	93.1	3,420	64,900	96%
IMR 8133	90.8	3,090	93.3	3,165	95.8	3,245	98.4	3,335	100.9	3,415	65,000	101%

165 gr Bullet · 25" barrel

COAL: 3.565" • Bullet length: 1.261" • Seat depth: 0.546" • Usable capacity: 105.9 / 115.7 gr H_2O

Powder	STEP 1 · 90%		STEP 2		STEP 3		STEP 4		STEP 5 · LIMIT			
	gr	fps	gr	fps	gr	fps	gr	fps	gr	fps	psi	Fill
Hodgdon Retumbo	91.6	3,135	94.1	3,210	96.7	3,290	99.3	3,370	101.8	3,450	64,900	100%
Alliant Reloder 26	86.0	3,130	88.4	3,205	90.8	3,280	93.1	3,350	95.5	3,430	64,900	91%
Vihtavuori N570	90.7	3,100	93.2	3,175	95.8	3,255	98.3	3,335	100.8	3,415	64,800	98%
Alliant Reloder 22	83.4	3,110	85.7	3,180	88.1	3,255	90.4	3,325	92.7	3,400	64,900	93%
Ramshot Magnum	91.7	3,075	94.3	3,155	96.8	3,230	99.4	3,310	101.9	3,390	64,900	96%
Alliant Reloder 25	87.8	3,080	90.3	3,155	92.7	3,230	95.1	3,305	97.6	3,385	64,800	101%
Hodgdon H1000	88.8	3,075	91.3	3,150	93.8	3,230	96.2	3,305	98.7	3,385	64,800	101%
IMR 7977	89.0	3,070	91.5	3,145	94.0	3,225	96.4	3,300	98.9	3,380	65,000	101%
Ramshot LRT	97.7	3,050	100.4	3,130	103.1	3,210	105.8	3,290	108.5	3,375	65,000	104%
Reload Swiss RS76	90.8	3,075	93.3	3,145	95.8	3,220	98.4	3,300	100.9	3,375	65,000	96%
Alliant Reloder 19	81.5	3,085	83.8	3,155	86.0	3,225	88.3	3,300	90.5	3,370	64,900	91%
Alliant Reloder 23	81.2	3,075	83.5	3,145	85.7	3,210	88.0	3,285	90.2	3,350	64,900	92%
IMR 4831	79.4	3,065	81.6	3,135	83.8	3,205	86.0	3,280	88.2	3,350	64,900	89%
Vihtavuori N568	92.0	3,005	94.5	3,085	97.1	3,170	99.7	3,255	102.2	3,335	64,900	100%
Accurate MagPro	86.8	3,010	89.2	3,085	91.6	3,155	94.0	3,230	96.4	3,310	65,000	93%
Hodgdon H4831SC	81.7	3,025	84.0	3,100	86.3	3,170	88.5	3,235	90.8	3,310	65,000	86%
Hodgdon H4831	82.1	3,025	84.4	3,095	86.7	3,165	88.9	3,235	91.2	3,305	64,900	92%
IMR 7828	83.2	3,025	85.5	3,095	87.8	3,165	90.1	3,235	92.4	3,305	65,000	88%
Vihtavuori N170	87.8	3,015	90.3	3,085	92.7	3,150	95.1	3,220	97.6	3,295	65,000	96%
Vihtavuori N165	82.3	3,000	84.6	3,065	86.8	3,130	89.1	3,200	91.4	3,265	65,000	93%

180 gr Bullet · 25" barrel

COAL: 3.550" • Bullet length: 1.321" • Seat depth: 0.621" • Usable capacity: 104.6 / 115.7 gr H_2O

Powder	STEP 1 · 90%		STEP 2		STEP 3		STEP 4		STEP 5 · LIMIT			
	gr	fps	gr	fps	gr	fps	gr	fps	gr	fps	psi	Fill
Hodgdon Retumbo	89.2	3,020	91.7	3,095	94.2	3,170	96.6	3,240	99.1	3,315	64,900	98%
Alliant Reloder 26	83.3	3,005	85.6	3,075	87.9	3,145	90.3	3,220	92.6	3,290	64,900	89%
Vihtavuori N570	87.7	2,990	90.1	3,065	92.6	3,140	95.0	3,215	97.4	3,285	64,900	96%
Ramshot Magnum	89.4	2,975	91.9	3,050	94.3	3,120	96.8	3,195	99.3	3,275	64,900	95%
Alliant Reloder 25	85.7	2,975	88.1	3,045	90.5	3,120	92.8	3,190	95.2	3,265	65,000	99%
Alliant Reloder 22	80.9	2,985	83.2	3,055	85.4	3,120	87.7	3,190	89.9	3,260	64,900	91%
Hodgdon H1000	86.5	2,970	88.9	3,040	91.3	3,115	93.7	3,185	96.1	3,260	64,900	100%
Ramshot LRT	95.3	2,950	98.0	3,025	100.6	3,105	103.3	3,185	105.9	3,260	64,900	103%
IMR 7977	86.8	2,965	89.2	3,035	91.6	3,110	94.0	3,180	96.4	3,255	65,000	100%
Reload Swiss RS76	88.4	2,955	90.9	3,030	93.3	3,095	95.8	3,170	98.2	3,240	64,900	95%
Hodgdon H50BMG	96.1	2,910	98.8	2,985	101.4	3,060	104.1	3,140	106.8	3,220	64,900	104%
Alliant Reloder 23	78.6	2,940	80.8	3,010	82.9	3,070	85.1	3,135	87.3	3,205	64,900	91%
Accurate MagPro	84.6	2,910	86.9	2,975	89.3	3,050	91.7	3,125	94.0	3,195	64,900	92%
Winchester StaBALL HD	87.7	2,910	90.1	2,975	92.6	3,050	95.0	3,120	97.4	3,190	65,000	95%
IMR 7828	80.6	2,905	82.8	2,975	85.0	3,040	87.3	3,110	89.5	3,175	64,900	86%
Hodgdon H4831	79.6	2,905	81.8	2,970	84.0	3,035	86.2	3,100	88.4	3,170	64,900	91%
Hodgdon H4831SC	79.3	2,905	81.5	2,970	83.7	3,040	85.9	3,105	88.1	3,170	64,800	85%
IMR 7828SSC	79.7	2,895	81.9	2,960	84.1	3,025	86.3	3,095	88.5	3,160	64,900	88%
Accurate 3100	78.5	2,890	80.7	2,955	82.8	3,020	85.0	3,090	87.2	3,155	65,000	90%
Vihtavuori N170	85.0	2,885	87.3	2,945	89.7	3,015	92.1	3,080	94.4	3,145	64,900	94%

190 gr Bullet · 25" barrel

COAL: 3.555" • Bullet length: 1.363" • Seat depth: 0.657" • Usable capacity: 104.0 / 115.7 gr H_2O

Powder	STEP 1 · 90%		STEP 2		STEP 3		STEP 4		STEP 5 · LIMIT			
	gr	fps	gr	fps	gr	fps	gr	fps	gr	fps	psi	Fill
Hodgdon Retumbo	87.8	2,950	90.2	3,020	92.7	3,090	95.1	3,165	97.5	3,235	64,900	97%
Vihtavuori N570	85.8	2,920	88.2	2,990	90.5	3,060	92.9	3,130	95.3	3,205	65,000	94%
Alliant Reloder 26	81.7	2,930	84.0	2,995	86.3	3,065	88.5	3,130	90.8	3,200	64,800	88%
Ramshot Magnum	88.0	2,910	90.5	2,985	92.9	3,055	95.3	3,125	97.8	3,200	64,800	94%
Ramshot LRT	94.0	2,890	96.6	2,965	99.2	3,040	101.8	3,115	104.4	3,190	64,900	102%
Vihtavuori N568	88.4	2,885	90.9	2,960	93.3	3,035	95.8	3,115	98.2	3,190	64,900	98%
Alliant Reloder 25	84.3	2,905	86.7	2,975	89.0	3,045	91.3	3,115	93.7	3,185	64,900	98%
Hodgdon H1000	85.1	2,900	87.4	2,970	89.8	3,040	92.2	3,110	94.5	3,180	64,900	99%
IMR 7977	85.4	2,895	87.8	2,965	90.2	3,035	92.5	3,105	94.9	3,180	64,900	99%
Alliant Reloder 22	79.4	2,905	81.6	2,975	83.8	3,040	86.0	3,105	88.2	3,170	64,900	90%
Reload Swiss RS76	87.0	2,885	89.4	2,950	91.8	3,020	94.3	3,090	96.7	3,160	65,000	94%
Hodgdon H50BMG	94.8	2,850	97.4	2,925	100.0	2,995	102.7	3,075	105.3	3,150	65,000	103%
IMR 8133	86.9	2,850	89.3	2,920	91.7	2,990	94.1	3,060	96.5	3,135	64,900	96%
Accurate MagPro	83.4	2,845	85.7	2,915	88.1	2,985	90.4	3,055	92.7	3,125	65,000	91%
Alliant Reloder 33	90.5	2,835	93.0	2,905	95.5	2,975	98.1	3,050	100.6	3,125	63,300	105%
Winchester StaBALL HD	86.2	2,840	88.6	2,905	91.0	2,975	93.4	3,045	95.8	3,115	64,900	94%
IMR 7828SSC	78.1	2,820	80.3	2,885	82.4	2,945	84.6	3,010	86.8	3,075	64,800	87%
Vihtavuori 24N41	88.8	2,775	91.3	2,850	93.8	2,920	96.2	2,990	98.7	3,065	64,900	97%
Vihtavuori N170	83.3	2,805	85.6	2,865	87.9	2,925	90.2	2,990	92.5	3,055	64,800	92%
Vihtavuori N165	77.9	2,785	80.1	2,850	82.3	2,910	84.4	2,970	86.6	3,035	64,900	89%

200 gr Bullet · 25" barrel

COAL: 3.535" • Bullet length: 1.489" • Seat depth: 0.804" • Usable capacity: 101.7 / 115.7 gr H_2O

Powder	STEP 1 · 90%		STEP 2		STEP 3		STEP 4		STEP 5 · LIMIT			
	gr	fps	gr	fps	gr	fps	gr	fps	gr	fps	psi	Fill
Hodgdon Retumbo	85.4	2,870	87.8	2,940	90.2	3,010	92.5	3,075	94.9	3,145	64,800	97%
Ramshot Magnum	85.8	2,840	88.2	2,910	90.5	2,980	92.9	3,050	95.3	3,120	64,900	94%
Vihtavuori N568	86.1	2,825	88.5	2,895	90.9	2,970	93.3	3,045	95.7	3,120	64,900	97%
Vihtavuori N570	83.2	2,845	85.5	2,910	87.8	2,980	90.1	3,045	92.4	3,115	65,000	93%
Alliant Reloder 26	79.4	2,845	81.6	2,910	83.8	2,975	86.0	3,045	88.2	3,110	64,800	87%
Ramshot LRT	91.6	2,820	94.1	2,890	96.7	2,965	99.3	3,040	101.8	3,110	64,900	102%
Alliant Reloder 25	82.2	2,830	84.5	2,900	86.8	2,965	89.0	3,030	91.3	3,100	64,900	98%
Hodgdon H1000	82.8	2,825	85.1	2,890	87.4	2,960	89.7	3,025	92.0	3,095	64,900	98%
IMR 7977	83.2	2,820	85.5	2,885	87.8	2,955	90.1	3,020	92.4	3,090	64,800	99%
Alliant Reloder 22	77.1	2,825	79.3	2,890	81.4	2,950	83.5	3,015	85.7	3,080	64,900	89%
Ramshot Grand	82.9	2,810	85.2	2,875	87.5	2,940	89.8	3,010	92.1	3,080	64,800	92%
Hodgdon H50BMG	92.3	2,780	94.9	2,850	97.4	2,920	100.0	2,995	102.6	3,070	65,000	103%
Reload Swiss RS76	84.7	2,805	87.0	2,870	89.4	2,935	91.8	3,005	94.1	3,070	64,900	93%
Alliant Reloder 33	88.6	2,775	91.0	2,840	93.5	2,910	96.0	2,985	98.4	3,055	64,000	105%
IMR 8133	84.7	2,780	87.0	2,845	89.4	2,915	91.8	2,985	94.1	3,055	64,900	96%
Accurate MagPro	81.3	2,775	83.5	2,840	85.8	2,910	88.0	2,975	90.3	3,045	64,900	91%
Winchester StaBALL HD	84.0	2,765	86.3	2,830	88.7	2,895	91.0	2,965	93.3	3,030	64,900	93%
IMR 7828	76.8	2,755	78.9	2,815	81.0	2,880	83.2	2,945	85.3	3,005	64,900	84%
Vihtavuori 24N41	86.4	2,710	88.8	2,780	91.2	2,850	93.6	2,920	96.0	2,990	64,800	96%
Vihtavuori N165	75.6	2,700	77.7	2,760	79.8	2,820	81.9	2,880	84.0	2,940	64,900	89%

210 gr Bullet · 25" barrel

COAL: 3.595" • Bullet length: 1.469" • Seat depth: 0.724" • Usable capacity: 102.7 / 115.7 gr H_2O

Powder	STEP 1 · 90%		STEP 2		STEP 3		STEP 4		STEP 5 · LIMIT			
	gr	fps	gr	fps	gr	fps	gr	fps	gr	fps	psi	Fill
Hodgdon Retumbo	84.7	2,805	87.0	2,870	89.4	2,935	91.8	3,005	94.1	3,070	65,000	95%
Vihtavuori N568	85.6	2,780	88.0	2,855	90.3	2,920	92.7	2,995	95.1	3,065	64,900	96%
Ramshot Magnum	85.2	2,785	87.6	2,855	90.0	2,920	92.3	2,990	94.7	3,060	64,900	93%
Ramshot LRT	91.1	2,765	93.6	2,835	96.2	2,905	98.7	2,975	101.2	3,050	64,900	100%
Hodgdon US 869	94.2	2,740	96.8	2,810	99.5	2,890	102.1	2,965	104.7	3,040	62,100	105%
Alliant Reloder 25	81.6	2,770	83.9	2,835	86.2	2,900	88.4	2,965	90.7	3,035	64,800	96%
Alliant Reloder 26	78.6	2,775	80.8	2,840	82.9	2,905	85.1	2,965	87.3	3,030	65,000	85%
Vihtavuori N570	81.7	2,770	84.0	2,835	86.3	2,900	88.5	2,965	90.8	3,030	64,800	91%
IMR 7977	82.6	2,760	84.9	2,825	87.2	2,890	89.5	2,955	91.8	3,025	64,900	97%
Hodgdon H1000	82.1	2,760	84.4	2,825	86.7	2,890	88.9	2,955	91.2	3,020	64,800	96%
Ramshot Grand	82.4	2,750	84.7	2,815	87.0	2,880	89.3	2,945	91.6	3,010	64,900	91%
Alliant Reloder 33	88.6	2,735	91.0	2,800	93.5	2,870	96.0	2,940	98.4	3,005	65,000	104%
Hodgdon H50BMG	91.7	2,725	94.3	2,795	96.8	2,860	99.4	2,930	101.9	3,005	64,800	101%
Reload Swiss RS76	84.1	2,740	86.4	2,805	88.8	2,870	91.1	2,935	93.4	3,000	64,900	92%
IMR 8133	84.2	2,725	86.5	2,790	88.9	2,860	91.3	2,925	93.6	2,995	64,900	95%
Winchester StaBALL HD	83.3	2,700	85.6	2,765	87.9	2,830	90.2	2,895	92.5	2,960	65,000	92%
Vihtavuori 24N41	85.9	2,670	88.3	2,735	90.7	2,805	93.0	2,870	95.4	2,935	65,000	95%
IMR 7828	76.0	2,690	78.1	2,750	80.2	2,810	82.3	2,870	84.4	2,930	64,900	83%
IMR 7828SSC	75.1	2,675	77.2	2,735	79.3	2,795	81.3	2,855	83.4	2,915	64,800	84%
Vihtavuori N170	79.9	2,645	82.1	2,700	84.3	2,760	86.6	2,820	88.8	2,880	64,900	90%

220 gr Bullet · 25" barrel

COAL: 3.550" • Bullet length: 1.536" • Seat depth: 0.836" • Usable capacity: 100.8 / 115.7 gr H_2O

Powder	STEP 1 · 90%		STEP 2		STEP 3		STEP 4		STEP 5 · LIMIT			
	gr	fps	gr	fps	gr	fps	gr	fps	gr	fps	psi	Fill
Vihtavuori N568	83.7	2,725	86.0	2,795	88.3	2,860	90.7	2,935	93.0	3,000	64,900	95%
Hodgdon Retumbo	82.7	2,735	85.0	2,795	87.3	2,860	89.6	2,925	91.9	2,990	64,900	95%
Ramshot Magnum	83.3	2,720	85.6	2,785	87.9	2,850	90.3	2,920	92.6	2,990	64,900	92%
Hodgdon US 869	92.5	2,690	95.1	2,765	97.7	2,840	100.2	2,910	102.8	2,985	62,500	105%
Ramshot LRT	89.2	2,705	91.7	2,775	94.2	2,840	96.6	2,910	99.1	2,980	65,000	100%
Alliant Reloder 25	79.8	2,705	82.0	2,765	84.3	2,830	86.5	2,895	88.7	2,960	65,000	96%
Vihtavuori N570	79.6	2,705	81.8	2,765	84.0	2,825	86.2	2,890	88.4	2,955	64,900	90%
Alliant Reloder 26	76.6	2,705	78.7	2,765	80.8	2,825	83.0	2,890	85.1	2,950	65,000	85%
IMR 7977	80.8	2,690	83.0	2,755	85.3	2,820	87.5	2,885	89.8	2,950	65,000	97%
Hodgdon H1000	80.2	2,690	82.4	2,755	84.7	2,820	86.9	2,880	89.1	2,945	64,900	96%
Alliant Reloder 33	86.6	2,665	89.0	2,735	91.4	2,800	93.8	2,865	96.2	2,935	65,000	104%
Ramshot Grand	80.6	2,680	82.8	2,745	85.1	2,810	87.3	2,870	89.6	2,935	64,900	91%
Hodgdon H50BMG	89.7	2,660	92.2	2,725	94.7	2,795	97.2	2,865	99.7	2,930	64,900	101%
IMR 8133	82.4	2,665	84.7	2,725	87.0	2,790	89.3	2,860	91.6	2,925	64,900	94%
Reload Swiss RS76	82.2	2,670	84.5	2,735	86.8	2,795	89.0	2,855	91.3	2,920	65,000	91%
Winchester StaBALL HD	81.3	2,635	83.5	2,695	85.8	2,755	88.0	2,815	90.3	2,880	64,900	91%
Winchester Supreme 780	75.2	2,630	77.3	2,695	79.3	2,750	81.4	2,815	83.5	2,875	64,900	83%
Vihtavuori 24N41	83.8	2,610	86.1	2,670	88.4	2,735	90.8	2,805	93.1	2,870	64,800	94%
IMR 7828	74.1	2,620	76.1	2,675	78.2	2,735	80.3	2,795	82.3	2,855	64,900	82%
Vihtavuori N170	77.9	2,570	80.1	2,625	82.2	2,680	84.3	2,735	86.5	2,795	64,900	89%

230 gr Bullet · 25" barrel

COAL: 3.600" • Bullet length: 1.681" • Seat depth: 0.931" • Usable capacity: 99.6 / 115.7 gr H_2O

Powder	STEP 1 · 90%		STEP 2		STEP 3		STEP 4		STEP 5 · LIMIT			
	gr	fps	gr	fps	gr	fps	gr	fps	gr	fps	psi	Fill
Hodgdon US 869	91.4	2,655	94.0	2,730	96.5	2,800	99.0	2,870	101.6	2,945	63,300	105%
Vihtavuori N568	82.3	2,680	84.6	2,745	86.8	2,810	89.1	2,880	91.4	2,945	65,000	95%
Ramshot Magnum	81.8	2,665	84.1	2,730	86.3	2,795	88.6	2,860	90.9	2,925	64,900	92%
Hodgdon Retumbo	81.1	2,670	83.3	2,730	85.6	2,795	87.8	2,855	90.1	2,920	64,900	94%
Ramshot LRT	87.6	2,650	90.0	2,715	92.4	2,780	94.9	2,850	97.3	2,915	64,900	100%
Alliant Reloder 25	78.4	2,645	80.6	2,710	82.8	2,770	84.9	2,830	87.1	2,895	65,000	95%
Vihtavuori N570	77.8	2,640	80.0	2,705	82.1	2,760	84.3	2,825	86.4	2,885	64,900	89%
Alliant Reloder 26	75.0	2,640	77.1	2,700	79.2	2,760	81.2	2,820	83.3	2,880	64,900	84%
Hodgdon H1000	78.7	2,635	80.9	2,695	83.1	2,755	85.2	2,815	87.4	2,880	65,000	95%
IMR 7977	79.3	2,635	81.5	2,695	83.7	2,755	85.9	2,820	88.1	2,880	64,900	96%
Hodgdon H50BMG	88.1	2,605	90.5	2,670	93.0	2,735	95.5	2,800	97.9	2,870	65,000	100%
Ramshot Grand	79.2	2,625	81.4	2,685	83.6	2,745	85.8	2,810	88.0	2,870	64,900	90%
Alliant Reloder 33	85.0	2,610	87.3	2,670	89.7	2,735	92.1	2,805	94.4	2,865	64,900	103%
IMR 8133	81.0	2,610	83.3	2,675	85.5	2,735	87.8	2,800	90.0	2,860	64,900	94%
Reload Swiss RS76	80.6	2,610	82.8	2,665	85.1	2,730	87.3	2,790	89.6	2,855	65,000	91%
Winchester StaBALL HD	79.7	2,570	81.9	2,630	84.2	2,695	86.4	2,755	88.6	2,815	64,900	91%
Vihtavuori 24N41	82.3	2,560	84.6	2,620	86.8	2,685	89.1	2,745	91.4	2,810	65,000	93%
Vihtavuori N560	72.4	2,570	74.4	2,625	76.4	2,680	78.4	2,735	80.4	2,790	65,000	84%
IMR 7828	72.5	2,555	74.5	2,610	76.5	2,670	78.6	2,730	80.6	2,785	64,900	81%
Vihtavuori N170	76.2	2,500	78.3	2,555	80.5	2,615	82.6	2,670	84.7	2,725	64,900	88%

.300 Ruger Compact Magnum

Hornady and Ruger developed the .300 Ruger Compact Magnum (RCM). It was designed in 2007 and released commercially in 2008. The cartridge is based on a shortened .375 Ruger case. That beltless design has a rim that matches the diameter of the case body. The case therefore fits a standard magnum bolt face. As a result the Ruger M77 Hawkeye required little redesign. The aim was to come close to .300 Winchester Magnum performance from a short-action rifle with a relatively short barrel.

Hornady's Superformance loads are rated at about 3,310 fps with 150-grain bullets and 3,040 fps with 180-grain bullets. Standard loads are somewhat slower. The cartridge suits deer, elk and similar game. Its compact rifles appeal to hunters who carry a rifle long distances. Yet the cartridge has remained uncommon. Factory rifles and ammunition can be hard to find in the United States and elsewhere. That leaves the .300 RCM largely to handloaders and owners of existing rifles.

Cartridge specifications	
Bullet Diameter	**0.308" (7.82 mm)**
Max Case Length	**2.100" (53.34 mm)**
Case Trim Length	**2.090" (53.09 mm)**
Max COAL	**2.840" (72.14 mm)**
Primer Pocket	**Large Rifle**
Standard Twist	**1:10"**
Case Capacity	**72.8 gr H_2O**
Max Pressure	**65,000 psi (SAAMI)**

110 gr Bullet · 25" barrel

COAL: 2.664" • Bullet length: 0.872" • Seat depth: 0.308" • Usable capacity: 69.5 / 75.2 gr H_2O

Powder	STEP 1 · 90%		STEP 2		STEP 3		STEP 4		STEP 5 · LIMIT			
	gr	fps	gr	fps	gr	fps	gr	fps	gr	fps	psi	Fill
Hodgdon Leverevolution	59.3	3,445	61.0	3,530	62.6	3,605	64.3	3,685	65.9	3,760	64,800	91%
Ramshot Big Game	63.8	3,395	65.6	3,480	67.3	3,555	69.1	3,640	70.9	3,725	64,800	104%
IMR 4895	58.1	3,400	59.7	3,475	61.3	3,550	63.0	3,630	64.6	3,705	64,800	96%
Vihtavuori N540	58.8	3,395	60.4	3,465	62.0	3,540	63.7	3,620	65.3	3,695	64,900	100%
Winchester StaBALL 6.5	65.1	3,360	66.9	3,440	68.7	3,525	70.5	3,610	72.3	3,695	64,100	105%
Hodgdon CFE 223	60.4	3,375	62.1	3,450	63.8	3,530	65.4	3,605	67.1	3,685	64,900	98%
Reload Swiss RS52	59.0	3,375	60.6	3,450	62.3	3,530	63.9	3,610	65.5	3,685	64,800	99%
Alliant Reloder 15	58.8	3,355	60.4	3,430	62.0	3,505	63.7	3,585	65.3	3,660	64,900	100%
Accurate 2520	57.0	3,365	58.6	3,440	60.1	3,510	61.7	3,580	63.3	3,655	65,000	94%
Alliant Power Pro 2000-MR	61.3	3,340	63.0	3,415	64.7	3,495	66.4	3,575	68.1	3,655	65,000	103%
Hodgdon H380	61.8	3,305	63.5	3,385	65.3	3,470	67.0	3,550	68.7	3,630	62,800	105%
Reload Swiss RS50	58.9	3,315	60.5	3,385	62.2	3,465	63.8	3,540	65.4	3,615	64,900	99%
IMR 4064	57.3	3,315	58.9	3,390	60.5	3,460	62.1	3,535	63.7	3,610	64,700	98%
Hodgdon Varget	56.6	3,290	58.2	3,370	59.8	3,445	61.3	3,515	62.9	3,595	64,800	94%
Winchester StaBALL Match	57.2	3,295	58.8	3,370	60.4	3,445	62.0	3,520	63.6	3,595	64,900	103%
Alliant Power Pro Varmint	55.6	3,295	57.1	3,365	58.7	3,440	60.3	3,515	61.8	3,585	64,800	94%
Hodgdon H414	62.6	3,255	64.3	3,335	66.0	3,415	67.8	3,500	69.5	3,580	64,800	102%
Hodgdon H4350	65.1	3,235	66.9	3,320	68.7	3,405	70.5	3,495	72.3	3,580	64,600	105%
Hodgdon SUPERFORMANCE	67.1	3,220	68.9	3,305	70.8	3,395	72.7	3,485	74.5	3,570	64,300	105%
Winchester 760	62.0	3,215	63.7	3,290	65.5	3,375	67.2	3,455	68.9	3,535	65,000	102%

125 gr Bullet · 25" barrel

COAL: 2.800" • Bullet length: 1.074" • Seat depth: 0.374" • Usable capacity: 68.5 / 75.2 gr H_2O

Powder	STEP 1 · 90%		STEP 2		STEP 3		STEP 4		STEP 5 · LIMIT			
	gr	fps	gr	fps	gr	fps	gr	fps	gr	fps	psi	Fill
Hodgdon Leverevolution	57.2	3,255	58.8	3,330	60.4	3,405	61.9	3,475	63.5	3,545	64,900	89%
Ramshot Big Game	61.7	3,230	63.4	3,305	65.2	3,385	66.9	3,465	68.6	3,540	64,900	102%
Winchester StaBALL 6.5	63.3	3,215	65.0	3,290	66.8	3,370	68.5	3,445	70.3	3,530	64,800	103%
Vihtavuori N550	60.8	3,230	62.5	3,300	64.2	3,375	65.9	3,450	67.6	3,525	64,800	104%
Accurate 4064	57.8	3,220	59.4	3,295	61.0	3,365	62.6	3,440	64.2	3,515	64,700	104%
Accurate 2700	61.7	3,195	63.4	3,275	65.2	3,355	66.9	3,435	68.6	3,510	64,900	102%
Reload Swiss RS52	57.1	3,205	58.7	3,280	60.3	3,350	61.8	3,420	63.4	3,495	65,000	97%
Hodgdon BL-C(2)	57.5	3,195	59.1	3,270	60.7	3,345	62.3	3,415	63.9	3,490	64,900	94%
Hodgdon CFE 223	58.2	3,190	59.8	3,260	61.5	3,335	63.1	3,410	64.7	3,480	64,800	96%
Alliant Power Pro 2000-MR	59.2	3,170	60.9	3,250	62.5	3,320	64.2	3,395	65.8	3,470	64,900	101%
Hodgdon SUPERFORMANCE	65.3	3,120	67.1	3,200	68.9	3,280	70.8	3,370	72.6	3,450	64,900	104%
Alliant Reloder 15	56.3	3,170	57.8	3,235	59.4	3,305	61.0	3,380	62.5	3,445	65,000	97%
Hodgdon H414	60.6	3,115	62.3	3,190	64.0	3,265	65.6	3,340	67.3	3,415	64,800	100%
IMR 4064	55.0	3,135	56.5	3,205	58.0	3,270	59.6	3,340	61.1	3,410	65,000	95%
Hodgdon Varget	54.5	3,120	56.0	3,190	57.5	3,260	59.0	3,325	60.5	3,395	64,700	92%
Winchester StaBALL Match	55.3	3,115	56.8	3,185	58.3	3,250	59.9	3,325	61.4	3,395	64,900	101%
Norma 202	53.4	3,115	54.9	3,185	56.3	3,245	57.8	3,315	59.3	3,380	65,000	94%
Alliant Power Pro Varmint	53.6	3,110	55.1	3,175	56.5	3,240	58.0	3,310	59.5	3,375	65,000	92%
Norma 204	61.6	3,065	63.3	3,140	65.0	3,220	66.7	3,295	68.4	3,375	61,900	105%
Winchester 760	60.0	3,070	61.7	3,145	63.4	3,225	65.0	3,295	66.7	3,370	64,800	100%

150 gr Bullet · 25" barrel

COAL: 2.615" • Bullet length: 1.197" • Seat depth: 0.682" • Usable capacity: 63.8 / 75.2 gr H_2O

Powder	STEP 1 · 90%		STEP 2		STEP 3		STEP 4		STEP 5 · LIMIT			
	gr	fps	gr	fps	gr	fps	gr	fps	gr	fps	psi	Fill
Ramshot Big Game	56.9	2,955	58.5	3,020	60.0	3,090	61.6	3,160	63.2	3,230	64,900	101%
Winchester StaBALL 6.5	58.4	2,945	60.0	3,010	61.7	3,085	63.3	3,155	64.9	3,225	64,900	103%
Accurate 2700	57.0	2,930	58.6	3,000	60.1	3,065	61.7	3,140	63.3	3,210	64,900	101%
Hodgdon Leverevolution	52.4	2,945	53.9	3,015	55.3	3,080	56.8	3,145	58.2	3,210	64,900	87%
Hodgdon SUPERFORMANCE	60.5	2,900	62.2	2,970	63.9	3,045	65.5	3,120	67.2	3,195	64,900	103%
Accurate 4064	52.8	2,920	54.3	2,985	55.8	3,050	57.2	3,115	58.7	3,185	64,800	102%
Vihtavuori N550	55.3	2,925	56.8	2,985	58.3	3,050	59.9	3,120	61.4	3,180	64,900	101%
Hodgdon H380	55.4	2,900	57.0	2,970	58.5	3,035	60.0	3,100	61.6	3,175	65,000	103%
Hodgdon H4350	57.7	2,890	59.3	2,960	60.9	3,030	62.5	3,105	64.1	3,175	64,900	101%
IMR 4895	50.7	2,890	52.1	2,955	53.5	3,015	54.9	3,080	56.3	3,140	65,000	91%
Hodgdon H414	55.9	2,860	57.5	2,930	59.0	2,995	60.5	3,065	62.1	3,135	64,900	99%
Alliant Reloder 15	51.1	2,860	52.5	2,920	54.0	2,985	55.4	3,050	56.8	3,110	65,000	95%
Shooters World Match Rifle	50.5	2,860	51.9	2,920	53.3	2,985	54.7	3,050	56.1	3,110	64,900	91%
IMR 4955	59.5	2,810	61.1	2,880	62.8	2,955	64.4	3,025	66.1	3,105	64,900	104%
IMR 4007 SSC	55.5	2,815	57.0	2,880	58.6	2,955	60.2	3,025	61.7	3,095	64,900	104%
IMR 4350	56.2	2,820	57.8	2,890	59.3	2,955	60.9	3,025	62.4	3,090	64,900	105%
Winchester 760	55.4	2,825	56.9	2,890	58.5	2,960	60.0	3,025	61.5	3,090	64,900	99%
IMR 4064	50.0	2,835	51.4	2,895	52.8	2,960	54.1	3,015	55.5	3,075	64,800	93%
Ramshot TAC	48.5	2,820	49.9	2,885	51.2	2,940	52.5	3,000	53.9	3,065	64,800	90%
IMR 4451	54.5	2,740	56.0	2,810	57.5	2,875	59.1	2,945	60.6	3,010	64,900	99%

165 gr Bullet · 25" barrel

COAL: 2.820" • Bullet length: 1.281" • Seat depth: 0.560" • Usable capacity: 65.1 / 75.2 gr H_2O

Powder	STEP 1 · 90%		STEP 2		STEP 3		STEP 4		STEP 5 · LIMIT			
	gr	fps	gr	fps	gr	fps	gr	fps	gr	fps	psi	Fill
Accurate 4350	58.7	2,845	60.3	2,910	62.0	2,980	63.6	3,050	65.2	3,120	65,000	105%
Hodgdon SUPERFORMANCE	60.0	2,815	61.7	2,885	63.4	2,955	65.0	3,025	66.7	3,100	64,700	100%
Ramshot Big Game	56.2	2,835	57.8	2,900	59.3	2,960	60.9	3,030	62.4	3,095	64,900	98%
Winchester StaBALL 6.5	57.8	2,830	59.4	2,900	61.0	2,965	62.6	3,030	64.2	3,095	65,000	99%
Accurate 2700	56.5	2,820	58.1	2,890	59.6	2,950	61.2	3,020	62.8	3,090	65,000	98%
Hodgdon H4350	56.8	2,790	58.4	2,860	60.0	2,925	61.5	2,990	63.1	3,060	64,900	98%
Reload Swiss RS62	59.0	2,780	60.6	2,845	62.3	2,920	63.9	2,990	65.5	3,060	64,800	105%
Reload Swiss RS60	56.1	2,790	57.6	2,850	59.2	2,920	60.8	2,990	62.3	3,055	64,800	98%
Norma 204	57.5	2,775	59.1	2,845	60.7	2,910	62.3	2,980	63.9	3,050	64,800	103%
Alliant Reloder 16	55.4	2,780	57.0	2,845	58.5	2,910	60.0	2,970	61.6	3,040	64,200	105%
Reload Swiss RS52	51.8	2,790	53.3	2,855	54.7	2,915	56.1	2,975	57.6	3,040	64,900	93%
Hodgdon H414	55.4	2,760	56.9	2,825	58.5	2,890	60.0	2,955	61.5	3,020	64,900	96%
Vihtavuori N550	53.6	2,765	55.1	2,825	56.6	2,890	58.1	2,950	59.6	3,010	64,800	96%
Winchester 760	54.8	2,720	56.3	2,785	57.8	2,845	59.4	2,915	60.9	2,980	65,000	96%
IMR 4350	55.4	2,720	56.9	2,785	58.5	2,850	60.0	2,915	61.5	2,975	64,800	101%
IMR 7828	61.1	2,685	62.8	2,755	64.5	2,825	66.2	2,895	67.9	2,965	62,600	105%
Alliant Reloder 15	50.0	2,720	51.4	2,780	52.8	2,840	54.1	2,895	55.5	2,955	64,900	91%
Alliant Reloder 19	57.9	2,675	59.5	2,745	61.1	2,810	62.7	2,880	64.3	2,950	64,000	105%
Shooters World SW4350	56.7	2,680	58.3	2,745	59.9	2,815	61.4	2,875	63.0	2,940	64,200	105%
Alliant Reloder 17	52.4	2,640	53.9	2,705	55.3	2,765	56.8	2,830	58.2	2,890	64,900	90%

180 gr Bullet · 25" barrel

COAL: 2.800" • Bullet length: 1.335" • Seat depth: 0.635" • Usable capacity: 63.8 / 75.2 gr H_2O

Powder	STEP 1 · 90%		STEP 2		STEP 3		STEP 4		STEP 5 · LIMIT			
	gr	fps	gr	fps	gr	fps	gr	fps	gr	fps	psi	Fill
Accurate 4350	56.8	2,725	58.4	2,790	60.0	2,860	61.5	2,920	63.1	2,990	64,900	103%
Hodgdon SUPERFORMANCE	58.2	2,710	59.8	2,775	61.5	2,845	63.1	2,910	64.7	2,975	64,900	99%
Winchester StaBALL 6.5	55.8	2,700	57.3	2,760	58.9	2,825	60.5	2,890	62.0	2,955	64,900	98%
Norma URP	54.8	2,685	56.3	2,750	57.8	2,815	59.4	2,885	60.9	2,950	64,800	105%
Accurate 2700	54.6	2,695	56.1	2,755	57.7	2,820	59.2	2,885	60.7	2,945	64,800	97%
Ramshot Big Game	54.2	2,700	55.7	2,760	57.2	2,820	58.7	2,885	60.2	2,945	64,900	96%
Reload Swiss RS62	57.2	2,675	58.8	2,740	60.4	2,810	62.0	2,875	63.6	2,945	65,000	104%
Reload Swiss RS60	54.4	2,680	55.9	2,745	57.4	2,805	58.9	2,870	60.4	2,935	64,900	97%
Ramshot Hunter	56.8	2,670	58.4	2,735	60.0	2,805	61.5	2,865	63.1	2,930	62,400	105%
Hodgdon H4350	54.7	2,670	56.2	2,730	57.8	2,800	59.3	2,860	60.8	2,925	64,900	96%
IMR 4955	57.4	2,645	59.0	2,710	60.6	2,775	62.2	2,840	63.8	2,910	64,800	101%
Hodgdon Hybrid 100V	53.7	2,640	55.2	2,705	56.7	2,770	58.2	2,835	59.7	2,900	62,000	105%
Hodgdon H380	52.6	2,645	54.0	2,700	55.5	2,765	57.0	2,825	58.4	2,885	64,900	97%
Alliant Power Pro 2000-MR	51.8	2,640	53.3	2,705	54.7	2,760	56.1	2,820	57.6	2,880	64,800	95%
Hodgdon H414	53.5	2,640	55.0	2,700	56.5	2,760	57.9	2,820	59.4	2,880	64,800	95%
Norma MRP	58.0	2,610	59.6	2,670	61.2	2,735	62.8	2,800	64.4	2,865	61,800	105%
Vihtavuori N550	51.3	2,620	52.7	2,675	54.1	2,730	55.6	2,790	57.0	2,850	64,900	94%
IMR 4350	53.4	2,605	54.9	2,665	56.3	2,725	57.8	2,785	59.3	2,845	65,000	100%
Winchester 760	52.9	2,600	54.4	2,660	55.8	2,720	57.3	2,780	58.8	2,845	64,800	95%
Shooters World SW4350	55.2	2,580	56.7	2,640	58.3	2,705	59.8	2,765	61.3	2,830	65,000	104%

200 gr Bullet · 25" barrel

COAL: 2.775" • Bullet length: 1.489" • Seat depth: 0.814" • Usable capacity: 61.0 / 75.2 gr H_2O

Powder	STEP 1 · 90%		STEP 2		STEP 3		STEP 4		STEP 5 · LIMIT			
	gr	fps	gr	fps	gr	fps	gr	fps	gr	fps	psi	Fill
Accurate 4350	53.7	2,565	55.2	2,625	56.7	2,685	58.2	2,750	59.7	2,810	64,800	102%
Hodgdon SUPERFORMANCE	55.3	2,565	56.8	2,625	58.3	2,685	59.9	2,750	61.4	2,810	64,900	99%
Vihtavuori N555	53.6	2,565	55.1	2,625	56.6	2,685	58.1	2,745	59.6	2,805	63,600	105%
Norma URP	51.8	2,540	53.3	2,600	54.7	2,660	56.1	2,720	57.6	2,785	64,800	104%
Reload Swiss RS62	54.3	2,535	55.8	2,595	57.3	2,655	58.8	2,720	60.3	2,780	64,800	103%
Ramshot Hunter	54.2	2,535	55.7	2,595	57.2	2,655	58.7	2,715	60.2	2,775	63,500	105%
Reload Swiss RS70	55.6	2,520	57.1	2,580	58.7	2,645	60.3	2,715	61.8	2,775	65,000	102%
Winchester StaBALL 6.5	52.7	2,530	54.2	2,590	55.7	2,650	57.1	2,705	58.6	2,765	64,700	97%
IMR 4831	53.6	2,505	55.1	2,565	56.6	2,630	58.1	2,690	59.6	2,755	62,300	105%
Hodgdon Hybrid 100V	51.3	2,505	52.7	2,565	54.1	2,625	55.6	2,690	57.0	2,750	63,000	105%
IMR 4955	54.5	2,505	56.0	2,565	57.5	2,625	59.0	2,685	60.5	2,750	64,700	100%
Hodgdon H4350	51.6	2,515	53.0	2,570	54.5	2,630	55.9	2,690	57.3	2,745	65,000	95%
Hodgdon H4831SC	55.7	2,495	57.3	2,560	58.8	2,620	60.4	2,685	61.9	2,745	64,900	102%
Norma MRP	55.4	2,485	56.9	2,545	58.5	2,605	60.0	2,665	61.5	2,730	63,100	105%
Alliant Reloder 19	53.5	2,460	55.0	2,520	56.5	2,580	57.9	2,640	59.4	2,705	64,700	103%
Alliant Power Pro 2000-MR	49.0	2,475	50.4	2,535	51.7	2,585	53.0	2,640	54.4	2,700	65,000	94%
Hodgdon H380	49.5	2,470	50.9	2,525	52.3	2,585	53.6	2,635	55.0	2,695	65,000	96%
IMR 4007 SSC	50.5	2,465	51.9	2,520	53.3	2,580	54.7	2,635	56.1	2,695	64,900	99%
IMR 4350	50.2	2,440	51.6	2,495	53.0	2,555	54.4	2,610	55.8	2,670	64,800	98%
Winchester 760	50.0	2,440	51.4	2,500	52.8	2,555	54.2	2,610	55.6	2,670	64,800	94%

220 gr Bullet · 25" barrel

COAL: 2.820" • Bullet length: 1.574" • Seat depth: 0.854" • Usable capacity: 60.0 / 75.2 gr H_2O

Powder	STEP 1 · 90%		STEP 2		STEP 3		STEP 4		STEP 5 · LIMIT			
	gr	fps	gr	fps	gr	fps	gr	fps	gr	fps	psi	Fill
Alliant Reloder 26	56.4	2,455	58.0	2,515	59.5	2,575	61.1	2,640	62.7	2,705	62,900	105%
Hodgdon SUPERFORMANCE	53.4	2,440	54.9	2,500	56.3	2,555	57.8	2,615	59.3	2,675	64,700	97%
IMR 4831	52.8	2,430	54.3	2,490	55.8	2,550	57.2	2,605	58.7	2,670	64,900	105%
Vihtavuori N555	51.6	2,445	53.0	2,500	54.5	2,560	55.9	2,615	57.3	2,670	65,000	102%
Accurate 4350	51.8	2,435	53.3	2,495	54.7	2,550	56.1	2,605	57.6	2,665	64,800	100%
Ramshot Hunter	52.8	2,425	54.3	2,485	55.8	2,545	57.2	2,600	58.7	2,660	65,000	104%
Reload Swiss RS62	52.6	2,420	54.0	2,475	55.5	2,535	57.0	2,595	58.4	2,655	64,800	101%
Reload Swiss RS70	53.8	2,410	55.3	2,470	56.8	2,525	58.3	2,585	59.8	2,650	64,800	100%
Hodgdon Hybrid 100V	50.3	2,415	51.7	2,470	53.1	2,530	54.5	2,585	55.9	2,645	64,900	104%
Winchester Supreme 780	55.8	2,395	57.3	2,455	58.9	2,515	60.5	2,580	62.0	2,640	64,800	104%
Reload Swiss RS60	49.9	2,410	51.3	2,465	52.6	2,520	54.0	2,575	55.4	2,635	64,900	95%
IMR 4955	52.7	2,390	54.2	2,450	55.7	2,505	57.1	2,565	58.6	2,625	64,700	98%
IMR 7828	54.4	2,375	55.9	2,430	57.4	2,490	58.9	2,545	60.4	2,605	64,800	101%
Hodgdon H4350	49.5	2,380	50.9	2,435	52.3	2,490	53.6	2,540	55.0	2,600	64,900	92%
Alliant Reloder 19	51.8	2,355	53.3	2,415	54.7	2,470	56.1	2,525	57.6	2,585	64,900	102%
Hodgdon H4831	52.8	2,335	54.3	2,395	55.8	2,450	57.2	2,505	58.7	2,565	62,200	105%
Hodgdon H414	48.7	2,345	50.1	2,400	51.4	2,455	52.8	2,510	54.1	2,560	64,800	92%
Alliant Reloder 16	48.2	2,345	49.5	2,395	50.9	2,450	52.2	2,500	53.5	2,555	64,700	99%
Winchester 760	48.2	2,315	49.6	2,370	50.9	2,420	52.3	2,475	53.6	2,530	64,900	92%
IMR 4350	48.2	2,310	49.5	2,360	50.9	2,415	52.2	2,470	53.5	2,520	64,700	96%

.300 Savage

Savage Arms introduced the .300 Savage in 1920 for its Model 99 lever-action rifle and its new Model 1920 bolt-action rifle. The cartridge was developed from the .250 Savage case. It was intended to give these short actions a more powerful .30-caliber cartridge than the earlier .303 Savage. The goal was performance approaching that of the military .30-06 Springfield loads of the time.

Factory loads typically drive 150-grain bullets at about 2,630 to 2,740 fps and 180-grain bullets at about 2,350 fps. The .300 Savage has moderate recoil. It became a widely used deer cartridge in North America and was chambered in both lever-action and bolt-action rifles. Its case design informed postwar U.S. military ammunition development. That work led to the 7.62x51mm NATO cartridge. The .308 Winchester is its commercial counterpart. The newer .308 largely displaced the .300 Savage in new rifles. Ammunition for the older round remains in production.

Cartridge specifications	
Bullet Diameter	**0.308" (7.82 mm)**
Max Case Length	**1.871" (47.52 mm)**
Case Trim Length	**1.861" (47.27 mm)**
Max COAL	**2.600" (66.04 mm)**
Primer Pocket	**Large Rifle**
Standard Twist	**1:10"**
Case Capacity	**52.8 gr H_2O**
Max Pressure	**47,000 psi (SAAMI)**

110 gr Bullet · 25" barrel

COAL: 2.300" • Bullet length: 0.738" • Seat depth: 0.308" • Usable capacity: 47.5 / 52.8 gr H_2O

Powder	STEP 1 · 90%		STEP 2		STEP 3		STEP 4		STEP 5 · LIMIT			
	gr	fps	gr	fps	gr	fps	gr	fps	gr	fps	psi	Fill
Hodgdon Benchmark	40.1	2,880	41.2	2,945	42.3	3,010	43.4	3,070	44.5	3,135	46,800	103%
Hodgdon CFE BLK	35.6	2,880	36.6	2,945	37.6	3,005	38.6	3,070	39.6	3,130	46,900	86%
Hodgdon Leverevolution	42.4	2,855	43.6	2,925	44.8	2,990	45.9	3,055	47.1	3,125	46,900	95%
Ramshot TAC	40.6	2,860	41.7	2,920	42.9	2,990	44.0	3,055	45.1	3,120	47,000	101%
Hodgdon H4895	41.0	2,850	42.1	2,915	43.3	2,985	44.4	3,050	45.5	3,115	46,800	99%
Accurate 2460	40.6	2,860	41.7	2,920	42.9	2,990	44.0	3,050	45.1	3,110	47,000	95%
Accurate 2520	41.5	2,845	42.6	2,905	43.8	2,975	45.0	3,040	46.1	3,105	46,800	100%
Alliant AR-Comp	39.0	2,855	40.1	2,920	41.1	2,975	42.2	3,040	43.3	3,105	46,900	98%
Vihtavuori N135	40.1	2,835	41.2	2,895	42.4	2,965	43.5	3,025	44.6	3,090	46,800	102%
Norma 202	40.7	2,815	41.8	2,880	43.0	2,945	44.1	3,010	45.2	3,070	46,900	103%
IMR 4895	41.1	2,780	42.3	2,845	43.4	2,910	44.6	2,980	45.7	3,040	46,800	99%
Vihtavuori N140	41.9	2,775	43.0	2,835	44.2	2,905	45.4	2,975	46.5	3,035	47,000	100%
Hodgdon CFE 223	42.9	2,750	44.1	2,820	45.3	2,885	46.5	2,955	47.7	3,025	46,900	102%
Winchester 748	42.7	2,755	43.9	2,825	45.0	2,885	46.2	2,955	47.4	3,025	46,800	103%
Hodgdon Varget	41.3	2,740	42.4	2,805	43.6	2,875	44.8	2,945	45.9	3,015	46,800	101%
Accurate 2230	38.3	2,775	39.3	2,830	40.4	2,890	41.5	2,955	42.5	3,010	46,800	91%
Vihtavuori N133	36.9	2,770	37.9	2,825	39.0	2,890	40.0	2,950	41.0	3,010	46,900	99%
IMR 4064	41.2	2,730	42.4	2,795	43.5	2,855	44.6	2,920	45.8	2,990	46,800	103%
IMR 3031	37.4	2,720	38.4	2,780	39.5	2,845	40.5	2,905	41.5	2,965	47,000	93%
Hodgdon H4198	32.0	2,695	32.9	2,755	33.8	2,810	34.7	2,870	35.6	2,925	46,700	86%

125 gr Bullet · 25" barrel

COAL: 2.550" • Bullet length: 1.036" • Seat depth: 0.356" • Usable capacity: 46.4 / 52.8 gr H_2O

Powder	STEP 1 · 90%		STEP 2		STEP 3		STEP 4		STEP 5 · LIMIT			
	gr	fps	gr	fps	gr	fps	gr	fps	gr	fps	psi	Fill
Vihtavuori N540	41.3	2,715	42.4	2,770	43.6	2,835	44.8	2,900	45.9	2,960	46,100	105%
Hodgdon Leverevolution	40.7	2,700	41.8	2,760	43.0	2,825	44.1	2,890	45.2	2,950	46,900	93%
Hodgdon Benchmark	38.1	2,700	39.1	2,755	40.2	2,820	41.3	2,880	42.3	2,935	46,900	100%
Hodgdon H4895	39.2	2,690	40.3	2,750	41.4	2,810	42.5	2,875	43.6	2,935	47,000	97%
Ramshot TAC	38.9	2,685	40.0	2,745	41.0	2,805	42.1	2,865	43.2	2,930	46,700	99%
Accurate 2520	39.7	2,675	40.8	2,735	41.9	2,795	43.0	2,855	44.1	2,915	46,800	98%
Alliant Reloder 15	41.0	2,650	42.1	2,710	43.3	2,775	44.5	2,840	45.6	2,900	46,600	105%
IMR 4895	39.3	2,630	40.4	2,690	41.5	2,750	42.6	2,810	43.7	2,875	46,900	97%
Winchester 748	41.0	2,620	42.1	2,680	43.3	2,750	44.5	2,815	45.6	2,875	46,900	101%
Vihtavuori N140	40.0	2,625	41.1	2,685	42.2	2,745	43.3	2,805	44.4	2,870	46,800	98%
Hodgdon Varget	39.6	2,610	40.7	2,675	41.8	2,735	42.9	2,800	44.0	2,860	46,800	99%
Reload Swiss RS52	40.1	2,590	41.2	2,655	42.3	2,715	43.4	2,775	44.5	2,840	46,900	101%
Hodgdon BL-C(2)	40.3	2,585	41.4	2,645	42.5	2,705	43.7	2,775	44.8	2,835	46,900	97%
Ramshot Big Game	42.9	2,570	44.1	2,635	45.3	2,700	46.5	2,765	47.7	2,830	46,900	105%
IMR 4064	39.2	2,585	40.3	2,645	41.4	2,705	42.4	2,760	43.5	2,820	46,800	100%
Alliant Power Pro Varmint	37.9	2,575	39.0	2,635	40.0	2,690	41.0	2,750	42.1	2,810	46,900	96%
Reload Swiss RS50	40.1	2,565	41.2	2,625	42.3	2,685	43.4	2,745	44.5	2,805	46,800	101%
IMR 4166	37.2	2,555	38.2	2,610	39.3	2,675	40.3	2,730	41.3	2,790	46,800	99%
IMR 3031	35.6	2,550	36.6	2,610	37.6	2,665	38.6	2,725	39.6	2,785	46,800	91%
IMR 4320	38.4	2,520	39.5	2,580	40.5	2,640	41.6	2,700	42.7	2,765	47,000	93%

150 gr Bullet · 25" barrel

COAL: 2.450" • Bullet length: 1.113" • Seat depth: 0.534" • Usable capacity: 43.3 / 52.8 gr H_2O

Powder	STEP 1 · 90%		STEP 2		STEP 3		STEP 4		STEP 5 · LIMIT			
	gr	fps	gr	fps	gr	fps	gr	fps	gr	fps	psi	Fill
Hodgdon Leverevolution	37.4	2,445	38.4	2,500	39.5	2,560	40.5	2,615	41.5	2,670	46,800	91%
Vihtavuori N540	37.7	2,445	38.8	2,505	39.8	2,555	40.9	2,615	41.9	2,670	46,800	103%
Hodgdon H4895	35.8	2,425	36.8	2,480	37.8	2,535	38.8	2,590	39.8	2,645	46,800	95%
Ramshot TAC	35.7	2,415	36.7	2,470	37.7	2,525	38.7	2,585	39.7	2,640	46,800	98%
Alliant Reloder 15	37.4	2,405	38.4	2,460	39.5	2,520	40.5	2,570	41.5	2,625	46,800	102%
Hodgdon Benchmark	34.5	2,415	35.5	2,470	36.4	2,520	37.3	2,570	38.3	2,625	46,900	97%
Winchester 748	37.7	2,390	38.8	2,450	39.8	2,500	40.9	2,560	41.9	2,615	46,700	99%
Hodgdon Varget	36.3	2,380	37.3	2,435	38.3	2,490	39.3	2,545	40.3	2,600	46,700	97%
IMR 4895	35.9	2,380	36.9	2,435	37.9	2,490	38.9	2,545	39.9	2,600	47,000	95%
Vihtavuori N140	36.5	2,375	37.5	2,425	38.5	2,480	39.5	2,535	40.5	2,590	46,700	95%
Alliant Reloder 17	40.8	2,330	41.9	2,390	43.0	2,450	44.2	2,515	45.3	2,575	45,500	105%
Norma 202	35.1	2,360	36.1	2,415	37.0	2,465	38.0	2,520	39.0	2,575	46,900	98%
Vihtavuori N135	34.5	2,370	35.5	2,425	36.4	2,470	37.3	2,520	38.3	2,575	46,900	96%
IMR 4064	35.5	2,335	36.5	2,390	37.5	2,440	38.4	2,490	39.4	2,545	46,800	97%
Vihtavuori N150	36.5	2,330	37.5	2,385	38.5	2,440	39.5	2,490	40.5	2,545	44,800	105%
Reload Swiss RS50	36.8	2,320	37.8	2,375	38.8	2,425	39.9	2,485	40.9	2,540	46,700	99%
Alliant Power Pro Varmint	34.7	2,320	35.7	2,375	36.7	2,430	37.6	2,480	38.6	2,535	47,000	94%
Accurate 2700	39.0	2,295	40.1	2,355	41.1	2,405	42.2	2,465	43.3	2,525	46,900	102%
IMR 8208 XBR	33.6	2,320	34.5	2,370	35.5	2,425	36.4	2,475	37.3	2,525	46,900	93%
IMR 3031	32.6	2,300	33.5	2,350	34.4	2,405	35.3	2,455	36.2	2,505	47,000	89%

165 gr Bullet · 25" barrel

COAL: 2.590" • Bullet length: 1.200" • Seat depth: 0.481" • Usable capacity: 44.3 / 52.8 gr H_2O

Powder	STEP 1 · 90%		STEP 2		STEP 3		STEP 4		STEP 5 · LIMIT			
	gr	fps	gr	fps	gr	fps	gr	fps	gr	fps	psi	Fill
Alliant Power Pro 2000-MR	39.8	2,355	40.9	2,415	42.0	2,470	43.1	2,525	44.2	2,585	44,900	105%
Hodgdon Leverevolution	36.9	2,350	37.9	2,400	39.0	2,460	40.0	2,510	41.0	2,565	47,000	88%
Vihtavuori N550	39.8	2,350	40.9	2,400	42.0	2,455	43.1	2,510	44.2	2,565	45,200	105%
Alliant Reloder 17	41.1	2,310	42.3	2,375	43.4	2,430	44.6	2,495	45.7	2,555	47,000	104%
Hodgdon H4895	35.3	2,325	36.3	2,375	37.3	2,430	38.2	2,475	39.2	2,530	46,900	92%
Vihtavuori N540	36.6	2,320	37.6	2,370	38.7	2,425	39.7	2,475	40.7	2,525	46,900	98%
Winchester 748	37.4	2,310	38.4	2,365	39.5	2,420	40.5	2,475	41.5	2,525	46,800	96%
Winchester StaBALL 6.5	41.0	2,295	42.1	2,350	43.3	2,410	44.5	2,470	45.6	2,525	46,800	104%
Alliant Reloder 15	36.5	2,300	37.5	2,350	38.5	2,405	39.5	2,455	40.5	2,505	46,900	98%
Hodgdon Varget	35.8	2,290	36.8	2,345	37.8	2,395	38.8	2,450	39.8	2,505	46,800	94%
Ramshot Big Game	39.2	2,285	40.3	2,340	41.4	2,395	42.4	2,445	43.5	2,500	46,800	100%
Hodgdon Benchmark	33.8	2,300	34.7	2,345	35.6	2,395	36.6	2,445	37.5	2,495	47,000	93%
IMR 4895	35.2	2,280	36.2	2,330	37.2	2,385	38.1	2,430	39.1	2,485	47,000	91%
Vihtavuori N140	35.8	2,270	36.8	2,325	37.8	2,375	38.8	2,430	39.8	2,480	46,900	92%
Hodgdon H380	38.4	2,260	39.5	2,315	40.5	2,365	41.6	2,420	42.7	2,475	47,000	102%
Hodgdon SUPERFORMANCE	42.4	2,200	43.6	2,260	44.8	2,320	45.9	2,375	47.1	2,435	46,800	104%
IMR 4064	34.7	2,235	35.7	2,285	36.7	2,340	37.6	2,385	38.6	2,435	47,000	93%
Shooters World The Creed	35.4	2,225	36.4	2,280	37.3	2,325	38.3	2,380	39.3	2,430	46,900	92%
Vihtavuori N135	33.4	2,235	34.3	2,285	35.3	2,335	36.2	2,380	37.1	2,430	46,800	91%
IMR 3031	32.0	2,195	32.9	2,245	33.8	2,290	34.7	2,340	35.6	2,390	46,900	86%

180 gr Bullet · 25" barrel

COAL: 2.565" • Bullet length: 1.277" • Seat depth: 0.583" • Usable capacity: 42.4 / 52.8 gr H_2O

Powder	STEP 1 · 90%		STEP 2		STEP 3		STEP 4		STEP 5 · LIMIT			
	gr	fps	gr	fps	gr	fps	gr	fps	gr	fps	psi	Fill
Alliant Power Pro 2000-MR	38.1	2,245	39.1	2,295	40.2	2,355	41.3	2,410	42.3	2,460	45,400	105%
Vihtavuori N550	38.1	2,240	39.1	2,290	40.2	2,340	41.3	2,395	42.3	2,445	46,200	105%
Alliant Reloder 17	39.2	2,205	40.3	2,265	41.4	2,320	42.5	2,380	43.6	2,435	47,000	103%
Hodgdon Leverevolution	35.1	2,220	36.1	2,270	37.0	2,320	38.0	2,370	39.0	2,425	47,000	88%
Winchester 748	35.6	2,190	36.6	2,240	37.6	2,295	38.6	2,345	39.6	2,400	47,000	96%
Winchester StaBALL 6.5	39.2	2,185	40.3	2,240	41.4	2,295	42.4	2,345	43.5	2,400	46,800	104%
Hodgdon H4895	33.5	2,190	34.4	2,240	35.4	2,290	36.3	2,340	37.2	2,385	47,000	91%
Ramshot Big Game	37.4	2,170	38.4	2,220	39.5	2,275	40.5	2,325	41.5	2,375	46,900	100%
Alliant Reloder 15	34.5	2,170	35.5	2,220	36.4	2,265	37.3	2,310	38.3	2,365	46,900	97%
Hodgdon Varget	34.0	2,165	35.0	2,220	35.9	2,265	36.8	2,315	37.8	2,365	46,800	93%
Accurate 2520	33.8	2,155	34.8	2,205	35.7	2,255	36.6	2,300	37.6	2,350	46,900	91%
Hodgdon H380	36.5	2,140	37.5	2,190	38.5	2,240	39.6	2,300	40.6	2,350	46,900	102%
IMR 4895	33.3	2,145	34.2	2,195	35.1	2,240	36.1	2,290	37.0	2,340	46,900	90%
Hodgdon SUPERFORMANCE	40.5	2,110	41.6	2,165	42.8	2,225	43.9	2,280	45.0	2,335	46,900	104%
Vihtavuori N140	33.9	2,140	34.9	2,195	35.8	2,240	36.8	2,290	37.7	2,335	46,900	91%
Hodgdon H414	37.1	2,110	38.1	2,160	39.2	2,215	40.2	2,265	41.2	2,315	46,900	99%
Winchester 760	37.2	2,105	38.2	2,155	39.3	2,210	40.3	2,260	41.3	2,310	46,800	100%
IMR 4064	32.9	2,110	33.8	2,160	34.7	2,205	35.6	2,250	36.5	2,295	47,000	92%
Norma 204	38.1	2,080	39.1	2,130	40.2	2,185	41.3	2,240	42.3	2,290	46,000	105%
IMR 3031	30.3	2,060	31.2	2,110	32.0	2,155	32.9	2,205	33.7	2,250	46,800	85%

.300 Weatherby Magnum

Roy Weatherby developed the .300 Weatherby Magnum in 1944. He began selling it commercially in 1945 alongside his .257 and .270 Weatherby Magnums. To create it he blew out the belted .300 H&H Magnum case to reduce body taper and added his distinctive double-radius shoulder. The full-length case requires a magnum-length action. The cartridge has been produced continuously since its introduction.

Weatherby's factory loads have driven 150-grain bullets at more than 3,500 fps, 180-grain bullets at about 3,250 fps and 200-grain bullets at about 3,050 fps. Current ammunition from Weatherby, Norma, Hornady, Barnes and others typically uses premium bullets of 165 to 210 grains. The cartridge is used worldwide for elk, moose, bear and plains game. It is the most popular of the Weatherby cartridges. Newer cartridges such as the .300 Remington Ultra Magnum and .30-378 Weatherby Magnum exceed its velocity. Even so rifles are offered by Weatherby and several other makers.

Cartridge specifications	
Bullet Diameter	**0.308" (7.82 mm)**
Max Case Length	**2.825" (71.75 mm)**
Case Trim Length	**2.815" (71.50 mm)**
Max COAL	**3.560" (90.42 mm)**
Primer Pocket	**Large Rifle**
Standard Twist	**1:10"**
Case Capacity	**98.0 gr H_2O**
Max Pressure	**65,000 psi (SAAMI)**

125 gr Bullet · 25" barrel

COAL: 3.475" • Bullet length: 1.072" • Seat depth: 0.422" • Usable capacity: 90.7 / 98.0 gr H_2O

Powder	STEP 1 · 90%		STEP 2		STEP 3		STEP 4		STEP 5 · LIMIT			
	gr	fps	gr	fps	gr	fps	gr	fps	gr	fps	psi	Fill
Alliant Reloder 26	84.5	3,350	86.8	3,435	89.2	3,525	91.6	3,615	93.9	3,705	64,800	104%
Alliant Reloder 19	80.6	3,320	82.8	3,400	85.1	3,490	87.3	3,575	89.6	3,665	63,900	105%
Hodgdon SUPERFORMANCE	78.7	3,330	80.9	3,415	83.1	3,500	85.2	3,575	87.4	3,660	64,900	94%
Hodgdon H4831SC	81.5	3,305	83.8	3,390	86.0	3,470	88.3	3,560	90.5	3,645	64,900	100%
Hodgdon Hybrid 100V	74.5	3,320	76.6	3,400	78.7	3,485	80.7	3,560	82.8	3,645	64,800	102%
Winchester StaBALL 6.5	75.1	3,340	77.2	3,415	79.3	3,490	81.3	3,565	83.4	3,645	65,000	93%
Norma MRP	81.7	3,300	84.0	3,385	86.3	3,470	88.5	3,555	90.8	3,640	64,900	104%
Accurate 4350	75.7	3,310	77.8	3,390	79.9	3,465	82.0	3,545	84.1	3,625	65,000	97%
IMR 4350	75.6	3,305	77.7	3,385	79.8	3,465	81.9	3,545	84.0	3,625	64,900	99%
Alliant Reloder 22	80.6	3,270	82.8	3,355	85.1	3,440	87.3	3,525	89.6	3,615	62,600	105%
Norma 204	75.6	3,295	77.7	3,375	79.8	3,455	81.9	3,530	84.0	3,615	64,900	97%
Hodgdon H4350	74.9	3,285	77.0	3,365	79.1	3,440	81.1	3,520	83.2	3,600	64,900	93%
Norma URP	74.7	3,275	76.8	3,360	78.8	3,435	80.9	3,520	83.0	3,600	64,900	100%
IMR 4451	74.7	3,270	76.8	3,350	78.8	3,425	80.9	3,505	83.0	3,585	65,000	95%
Accurate 2700	72.5	3,280	74.5	3,355	76.5	3,430	78.5	3,500	80.5	3,580	64,900	90%
IMR 4831	76.0	3,225	78.1	3,305	80.2	3,390	82.3	3,470	84.4	3,555	65,000	100%
Accurate 4064	66.8	3,245	68.7	3,315	70.5	3,380	72.3	3,450	74.2	3,520	64,900	91%
Shooters World SW4350	75.3	3,195	77.4	3,275	79.5	3,350	81.6	3,430	83.7	3,505	64,900	100%
Vihtavuori N150	66.3	3,225	68.2	3,295	70.0	3,365	71.8	3,430	73.7	3,500	65,000	91%
Hodgdon Varget	63.9	3,180	65.7	3,250	67.5	3,320	69.2	3,385	71.0	3,455	64,900	81%

150 gr Bullet · 25" barrel

COAL: 3.340" • Bullet length: 1.211" • Seat depth: 0.695" • Usable capacity: 86.4 / 98.0 gr H_2O

Powder	STEP 1 · 90%		STEP 2		STEP 3		STEP 4		STEP 5 · LIMIT			
	gr	fps	gr	fps	gr	fps	gr	fps	gr	fps	psi	Fill
Alliant Reloder 26	79.3	3,130	81.5	3,210	83.7	3,290	85.9	3,370	88.1	3,455	64,800	102%
Alliant Reloder 19	76.1	3,120	78.2	3,200	80.3	3,275	82.5	3,360	84.6	3,440	64,900	104%
Alliant Reloder 22	76.6	3,100	78.7	3,175	80.8	3,250	83.0	3,335	85.1	3,410	65,000	105%
Alliant Reloder 23	75.2	3,100	77.3	3,175	79.4	3,250	81.5	3,325	83.6	3,405	61,500	105%
Hodgdon SUPERFORMANCE	73.6	3,090	75.6	3,160	77.7	3,235	79.8	3,315	81.8	3,390	64,800	93%
Vihtavuori N560	77.4	3,095	79.6	3,170	81.7	3,240	83.8	3,315	86.0	3,390	64,900	104%
Hodgdon H4831SC	76.4	3,075	78.5	3,150	80.7	3,230	82.8	3,310	84.9	3,385	64,900	99%
IMR 4955	73.8	3,045	75.8	3,120	77.9	3,195	80.0	3,275	82.0	3,350	64,900	95%
Accurate 4350	70.6	3,055	72.5	3,125	74.5	3,195	76.5	3,270	78.4	3,340	64,800	95%
Reload Swiss RS60	68.9	3,055	70.8	3,125	72.7	3,195	74.6	3,265	76.5	3,340	64,800	91%
IMR 4350	70.1	3,045	72.0	3,115	74.0	3,185	76.0	3,260	77.9	3,330	64,800	97%
Ramshot Grand	80.1	3,010	82.3	3,085	84.5	3,165	86.8	3,250	89.0	3,330	62,300	105%
Ramshot Hunter	71.9	3,045	73.9	3,115	75.9	3,185	77.9	3,255	79.9	3,330	65,000	98%
IMR 7828SSC	76.3	3,020	78.4	3,090	80.5	3,170	82.7	3,245	84.8	3,325	64,900	102%
Hodgdon H4350	69.4	3,030	71.3	3,100	73.3	3,175	75.2	3,240	77.1	3,310	64,800	90%
Hodgdon H4831	75.1	3,005	77.2	3,080	79.3	3,155	81.3	3,230	83.4	3,305	65,000	104%
IMR 4831	71.4	3,010	73.4	3,085	75.3	3,155	77.3	3,230	79.3	3,305	65,000	99%
Reload Swiss RS76	80.9	2,985	83.2	3,065	85.4	3,140	87.7	3,220	89.9	3,300	62,100	105%
Vihtavuori N160	71.7	3,015	73.7	3,085	75.7	3,155	77.7	3,225	79.7	3,295	64,900	100%
IMR 7828	75.4	2,960	77.5	3,035	79.6	3,110	81.7	3,185	83.8	3,260	64,900	98%

165 gr Bullet · 25" barrel

COAL: 3.550" • Bullet length: 1.277" • Seat depth: 0.551" • Usable capacity: 88.1 / 98.0 gr H_2O

Powder	STEP 1 · 90%		STEP 2		STEP 3		STEP 4		STEP 5 · LIMIT			
	gr	fps	gr	fps	gr	fps	gr	fps	gr	fps	psi	Fill
Alliant Reloder 26	78.7	3,035	80.9	3,115	83.1	3,190	85.2	3,265	87.4	3,340	64,900	100%
Alliant Reloder 19	75.6	3,030	77.7	3,100	79.8	3,175	81.9	3,250	84.0	3,330	64,900	101%
Alliant Reloder 23	75.9	3,040	78.0	3,110	80.1	3,185	82.2	3,260	84.3	3,330	64,900	104%
Alliant Reloder 22	75.9	3,000	78.0	3,075	80.1	3,145	82.2	3,220	84.3	3,295	64,900	102%
Ramshot Grand	80.9	2,965	83.2	3,040	85.4	3,115	87.7	3,195	89.9	3,275	64,800	104%
Hodgdon H4831SC	75.8	2,975	77.9	3,050	80.0	3,120	82.1	3,195	84.2	3,265	64,900	96%
Norma MRP	75.8	2,970	77.9	3,040	80.0	3,115	82.1	3,185	84.2	3,260	64,900	99%
Ramshot Magnum	82.8	2,935	85.1	3,010	87.4	3,090	89.7	3,165	92.0	3,250	64,900	105%
Vihtavuori N560	75.6	2,955	77.7	3,025	79.8	3,095	81.9	3,165	84.0	3,230	65,000	100%
Vihtavuori N165	76.3	2,945	78.4	3,010	80.5	3,080	82.7	3,155	84.8	3,225	64,900	103%
Norma URP	68.7	2,950	70.6	3,015	72.5	3,085	74.4	3,155	76.3	3,220	64,800	95%
IMR 7828SSC	75.3	2,920	77.4	2,990	79.5	3,065	81.6	3,135	83.7	3,210	65,000	99%
IMR 4831	70.8	2,915	72.8	2,985	74.8	3,055	76.7	3,120	78.7	3,195	64,800	96%
Norma 204	70.1	2,925	72.0	2,990	74.0	3,060	76.0	3,130	77.9	3,195	64,900	93%
Winchester StaBALL HD	81.7	2,890	84.0	2,965	86.3	3,040	88.5	3,115	90.8	3,195	63,700	105%
Hodgdon H4831	74.3	2,905	76.3	2,975	78.4	3,045	80.5	3,120	82.5	3,190	65,000	101%
IMR 4350	68.9	2,920	70.8	2,985	72.8	3,055	74.7	3,120	76.6	3,185	64,800	93%
Vihtavuori N555	68.9	2,920	70.8	2,980	72.8	3,050	74.7	3,115	76.6	3,185	65,000	93%
IMR 4451	69.1	2,910	71.0	2,975	72.9	3,045	74.9	3,110	76.8	3,180	64,900	91%
Hodgdon H4350	68.2	2,910	70.1	2,975	72.0	3,040	73.9	3,105	75.8	3,170	64,800	87%

180 gr Bullet · 25" barrel

COAL: 3.530" • Bullet length: 1.331" • Seat depth: 0.626" • Usable capacity: 86.8 / 98.0 gr H_2O

Powder	STEP 1 · 90%		STEP 2		STEP 3		STEP 4		STEP 5 · LIMIT			
	gr	fps	gr	fps	gr	fps	gr	fps	gr	fps	psi	Fill
Alliant Reloder 26	76.3	2,920	78.4	2,990	80.5	3,065	82.7	3,140	84.8	3,210	64,900	98%
Alliant Reloder 19	73.5	2,920	75.5	2,985	77.6	3,060	79.7	3,135	81.7	3,205	64,800	100%
Alliant Reloder 23	73.6	2,915	75.6	2,985	77.7	3,055	79.8	3,125	81.8	3,195	65,000	102%
Alliant Reloder 22	73.6	2,885	75.6	2,955	77.7	3,025	79.8	3,095	81.8	3,165	64,900	100%
Ramshot Grand	78.9	2,860	81.1	2,935	83.3	3,010	85.5	3,085	87.7	3,160	64,900	103%
Ramshot Magnum	80.6	2,840	82.8	2,910	85.1	2,990	87.3	3,060	89.6	3,140	64,800	104%
Vihtavuori N570	79.7	2,845	81.9	2,920	84.1	2,990	86.3	3,065	88.5	3,140	62,600	105%
Hodgdon Retumbo	78.8	2,835	81.0	2,905	83.2	2,980	85.4	3,050	87.6	3,125	63,400	105%
Reload Swiss RS76	79.5	2,830	81.7	2,900	83.9	2,970	86.1	3,045	88.3	3,115	65,000	103%
Winchester StaBALL HD	80.1	2,810	82.3	2,880	84.5	2,950	86.8	3,025	89.0	3,100	64,900	104%
Norma URP	66.4	2,830	68.3	2,895	70.1	2,960	72.0	3,025	73.8	3,090	64,800	93%
IMR 7828SSC	72.9	2,810	74.9	2,875	77.0	2,945	79.0	3,010	81.0	3,080	64,900	97%
Vihtavuori N560	72.7	2,825	74.7	2,885	76.8	2,950	78.8	3,015	80.8	3,080	64,900	97%
IMR 4831	68.9	2,805	70.8	2,870	72.8	2,940	74.7	3,005	76.6	3,075	64,900	95%
Hodgdon H4831	71.9	2,790	73.9	2,855	75.9	2,925	77.9	2,990	79.9	3,060	64,900	99%
Ramshot Hunter	68.9	2,805	70.8	2,865	72.7	2,930	74.6	2,995	76.5	3,055	65,000	94%
IMR 4350	66.6	2,790	68.4	2,850	70.3	2,915	72.2	2,980	74.0	3,040	64,800	92%
Vihtavuori N555	66.2	2,790	68.0	2,850	69.8	2,910	71.7	2,975	73.5	3,035	64,900	91%
Hodgdon H4350	65.9	2,785	67.7	2,845	69.6	2,910	71.4	2,970	73.2	3,030	64,800	85%
IMR 7828	72.0	2,765	74.0	2,830	76.0	2,895	78.0	2,960	80.0	3,030	64,900	93%

190 gr Bullet · 25" barrel

COAL: 3.550" • Bullet length: 1.372" • Seat depth: 0.647" • Usable capacity: 86.5 / 98.0 gr H_2O

Powder	STEP 1 · 90%		STEP 2		STEP 3		STEP 4		STEP 5 · LIMIT			
	gr	fps	gr	fps	gr	fps	gr	fps	gr	fps	psi	Fill
Alliant Reloder 26	75.2	2,855	77.3	2,925	79.4	2,995	81.5	3,065	83.6	3,140	65,000	97%
Alliant Reloder 19	72.5	2,855	74.5	2,920	76.5	2,990	78.6	3,060	80.6	3,130	64,800	99%
Vihtavuori N570	79.4	2,825	81.6	2,895	83.8	2,970	86.0	3,040	88.2	3,115	64,600	105%
Alliant Reloder 23	72.5	2,845	74.5	2,910	76.5	2,980	78.5	3,045	80.5	3,110	64,900	101%
Ramshot Grand	78.0	2,805	80.2	2,875	82.3	2,945	84.5	3,020	86.7	3,095	64,900	102%
Alliant Reloder 22	72.5	2,820	74.5	2,885	76.5	2,950	78.6	3,020	80.6	3,090	65,000	99%
Ramshot Magnum	79.7	2,790	81.9	2,860	84.2	2,935	86.4	3,010	88.6	3,085	65,000	103%
Hodgdon Retumbo	78.5	2,800	80.7	2,870	82.8	2,935	85.0	3,010	87.2	3,080	64,900	105%
Hodgdon H4831SC	72.5	2,795	74.5	2,860	76.5	2,925	78.6	2,995	80.6	3,060	64,800	94%
Norma MRP	72.5	2,790	74.5	2,855	76.5	2,920	78.5	2,985	80.5	3,050	65,000	97%
Vihtavuori N565	74.8	2,780	76.9	2,845	78.9	2,910	81.0	2,980	83.1	3,050	65,000	101%
Reload Swiss RS76	78.5	2,770	80.7	2,840	82.8	2,905	85.0	2,975	87.2	3,045	65,000	102%
Reload Swiss RS62	68.9	2,775	70.8	2,840	72.8	2,910	74.7	2,970	76.6	3,035	64,800	92%
IMR 8133	78.6	2,730	80.8	2,805	82.9	2,870	85.1	2,945	87.3	3,020	63,900	105%
IMR 4831	68.0	2,745	69.9	2,810	71.8	2,875	73.7	2,935	75.6	3,005	64,900	94%
IMR 7828SSC	71.7	2,745	73.7	2,810	75.7	2,875	77.7	2,940	79.7	3,005	65,000	96%
Vihtavuori N165	72.5	2,745	74.5	2,810	76.5	2,870	78.5	2,935	80.5	3,000	64,800	100%
Vihtavuori N560	71.3	2,745	73.3	2,810	75.3	2,870	77.2	2,930	79.2	2,995	64,900	96%
Ramshot Hunter	67.8	2,730	69.7	2,795	71.5	2,855	73.4	2,915	75.3	2,980	65,000	92%
IMR 4350	65.4	2,715	67.2	2,775	69.1	2,840	70.9	2,900	72.7	2,960	64,900	90%

200 gr Bullet · 25" barrel

COAL: 3.510" • Bullet length: 1.477" • Seat depth: 0.792" • Usable capacity: 84.1 / 98.0 gr H_2O

Powder	STEP 1 · 90%		STEP 2		STEP 3		STEP 4		STEP 5 · LIMIT			
	gr	fps	gr	fps	gr	fps	gr	fps	gr	fps	psi	Fill
Alliant Reloder 26	72.9	2,775	74.9	2,840	77.0	2,910	79.0	2,975	81.0	3,045	65,000	97%
Alliant Reloder 19	70.4	2,775	72.4	2,840	74.3	2,905	76.3	2,975	78.2	3,040	64,900	99%
Vihtavuori N570	77.0	2,755	79.2	2,825	81.3	2,895	83.4	2,965	85.6	3,040	64,900	105%
Alliant Reloder 23	70.2	2,755	72.2	2,820	74.1	2,885	76.0	2,950	78.0	3,015	65,000	101%
Ramshot Grand	75.8	2,725	77.9	2,795	80.0	2,865	82.1	2,935	84.2	3,005	64,900	102%
Ramshot Magnum	77.4	2,715	79.6	2,790	81.7	2,855	83.8	2,925	86.0	3,000	64,900	103%
Alliant Reloder 22	70.3	2,735	72.3	2,805	74.2	2,865	76.1	2,930	78.1	2,995	64,900	99%
Hodgdon Retumbo	76.2	2,720	78.3	2,785	80.5	2,860	82.6	2,925	84.7	2,995	65,000	105%
Hodgdon H4831SC	70.4	2,710	72.4	2,780	74.3	2,840	76.3	2,905	78.2	2,970	65,000	94%
Norma MRP	70.1	2,700	72.0	2,760	74.0	2,825	76.0	2,890	77.9	2,955	64,800	96%
IMR 4955	68.0	2,690	69.9	2,750	71.8	2,815	73.7	2,880	75.6	2,945	64,900	90%
Winchester StaBALL HD	76.8	2,675	78.9	2,740	81.0	2,810	83.2	2,880	85.3	2,945	64,800	103%
IMR 8133	76.4	2,660	78.5	2,730	80.7	2,800	82.8	2,870	84.9	2,940	64,200	105%
Winchester Supreme 780	70.8	2,670	72.8	2,735	74.8	2,800	76.7	2,865	78.7	2,930	65,000	94%
IMR 7828SSC	69.4	2,660	71.3	2,725	73.3	2,790	75.2	2,850	77.1	2,915	64,900	95%
IMR 4831	66.0	2,665	67.8	2,725	69.7	2,790	71.5	2,850	73.3	2,910	64,800	94%
Vihtavuori N165	70.1	2,655	72.0	2,715	74.0	2,780	76.0	2,845	77.9	2,905	64,900	99%
Vihtavuori N560	68.9	2,660	70.8	2,715	72.7	2,775	74.6	2,835	76.5	2,895	65,000	95%
Accurate 3100	67.5	2,625	69.4	2,690	71.3	2,755	73.1	2,815	75.0	2,875	64,800	97%
IMR 7828	68.5	2,620	70.4	2,680	72.3	2,740	74.2	2,805	76.1	2,865	64,800	91%

210 gr Bullet · 25" barrel

COAL: 3.560" • Bullet length: 1.469" • Seat depth: 0.734" • Usable capacity: 84.8 / 98.0 gr H_2O

Powder	STEP 1 · 90%		STEP 2		STEP 3		STEP 4		STEP 5 · LIMIT			
	gr	fps	gr	fps	gr	fps	gr	fps	gr	fps	psi	Fill
Alliant Reloder 19	69.8	2,715	71.8	2,780	73.7	2,845	75.6	2,905	77.6	2,975	64,800	97%
Alliant Reloder 26	72.2	2,715	74.2	2,775	76.2	2,840	78.2	2,905	80.2	2,975	65,000	95%
Vihtavuori N570	76.1	2,705	78.2	2,770	80.3	2,835	82.5	2,910	84.6	2,975	65,000	103%
Ramshot Grand	75.4	2,675	77.5	2,740	79.6	2,810	81.7	2,875	83.8	2,945	65,000	101%
Ramshot Magnum	77.0	2,675	79.1	2,740	81.3	2,810	83.4	2,875	85.5	2,945	64,900	101%
Accurate MagPro	74.8	2,670	76.9	2,735	78.9	2,800	81.0	2,870	83.1	2,940	64,900	100%
Alliant Reloder 23	69.4	2,690	71.3	2,750	73.3	2,815	75.2	2,875	77.1	2,935	64,900	99%
Hodgdon Retumbo	75.6	2,665	77.7	2,730	79.8	2,795	81.9	2,865	84.0	2,930	64,900	103%
Alliant Reloder 22	69.6	2,675	71.5	2,735	73.4	2,795	75.4	2,860	77.3	2,925	64,900	97%
Alliant Reloder 25	73.4	2,660	75.4	2,720	77.5	2,790	79.5	2,855	81.5	2,920	62,600	105%
Hodgdon H1000	73.8	2,645	75.8	2,705	77.9	2,775	80.0	2,840	82.0	2,905	62,300	105%
Hodgdon H4831SC	69.8	2,650	71.7	2,710	73.7	2,775	75.6	2,840	77.5	2,900	65,000	92%
Norma MRP	69.5	2,640	71.4	2,700	73.3	2,760	75.3	2,825	77.2	2,885	65,000	95%
Reload Swiss RS62	66.3	2,635	68.2	2,700	70.0	2,755	71.8	2,815	73.7	2,880	64,900	90%
Winchester Supreme 780	70.1	2,615	72.0	2,675	74.0	2,740	76.0	2,800	77.9	2,865	65,000	92%
IMR 4831	65.5	2,605	67.3	2,665	69.2	2,730	71.0	2,790	72.8	2,850	64,800	92%
IMR 7828SSC	68.7	2,605	70.6	2,665	72.5	2,725	74.4	2,785	76.3	2,845	65,000	94%
Vihtavuori N165	69.2	2,590	71.1	2,645	73.1	2,710	75.0	2,765	76.9	2,825	64,800	97%
IMR 7828	67.8	2,565	69.7	2,625	71.5	2,680	73.4	2,740	75.3	2,800	64,900	89%
IMR 4350	62.5	2,560	64.2	2,615	66.0	2,675	67.7	2,730	69.4	2,785	64,800	88%

220 gr Bullet · 25" barrel

COAL: 3.545" • Bullet length: 1.536" • Seat depth: 0.816" • Usable capacity: 83.4 / 98.0 gr H_2O

Powder	STEP 1 · 90%		STEP 2		STEP 3		STEP 4		STEP 5 · LIMIT			
	gr	fps	gr	fps	gr	fps	gr	fps	gr	fps	psi	Fill
Alliant Reloder 19	68.4	2,650	70.3	2,715	72.2	2,775	74.1	2,840	76.0	2,900	65,000	97%
Vihtavuori N570	74.3	2,640	76.3	2,705	78.4	2,770	80.5	2,840	82.5	2,900	64,800	102%
Alliant Reloder 26	70.5	2,645	72.5	2,705	74.4	2,765	76.3	2,830	78.3	2,895	64,800	94%
Ramshot Magnum	75.4	2,615	77.5	2,680	79.6	2,745	81.7	2,810	83.8	2,880	65,000	101%
Ramshot Grand	73.9	2,615	76.0	2,680	78.0	2,740	80.0	2,805	82.1	2,875	64,900	100%
Accurate MagPro	73.3	2,610	75.3	2,670	77.3	2,735	79.4	2,805	81.4	2,870	64,800	100%
Alliant Reloder 25	72.2	2,605	74.2	2,670	76.2	2,735	78.2	2,800	80.2	2,865	63,500	105%
Vihtavuori N568	75.2	2,580	77.3	2,645	79.3	2,710	81.4	2,780	83.5	2,850	65,000	104%
Alliant Reloder 22	68.0	2,605	69.9	2,665	71.8	2,725	73.6	2,785	75.5	2,845	64,800	96%
Hodgdon H1000	72.5	2,590	74.5	2,650	76.5	2,715	78.6	2,785	80.6	2,845	63,100	105%
IMR 7977	72.5	2,575	74.5	2,635	76.5	2,700	78.6	2,770	80.6	2,835	63,500	105%
Hodgdon H4831SC	68.2	2,580	70.1	2,640	72.0	2,700	73.9	2,765	75.8	2,825	65,000	91%
Winchester StaBALL HD	74.7	2,560	76.8	2,625	78.8	2,685	80.9	2,750	83.0	2,820	64,900	101%
Vihtavuori N565	68.9	2,560	70.8	2,620	72.8	2,680	74.7	2,740	76.6	2,800	64,900	97%
Winchester Supreme 780	68.4	2,545	70.3	2,605	72.2	2,665	74.1	2,725	76.0	2,785	64,800	92%
IMR 4831	64.2	2,545	66.0	2,605	67.8	2,660	69.5	2,720	71.3	2,775	64,900	92%
IMR 7828SSC	67.0	2,535	68.8	2,590	70.7	2,650	72.6	2,710	74.4	2,765	64,800	93%
Vihtavuori N165	67.6	2,520	69.5	2,575	71.3	2,630	73.2	2,690	75.1	2,750	65,000	97%
IMR 7828	66.2	2,500	68.0	2,555	69.8	2,610	71.7	2,670	73.5	2,725	64,900	89%
Hodgdon H4350	60.3	2,485	62.0	2,540	63.6	2,590	65.3	2,645	67.0	2,700	65,000	81%

230 gr Bullet · 25" barrel

COAL: 3.560" • Bullet length: 1.681" • Seat depth: 0.946" • Usable capacity: 81.7 / 98.0 gr H_2O

Powder	STEP 1 · 90%		STEP 2		STEP 3		STEP 4		STEP 5 · LIMIT			
	gr	fps	gr	fps	gr	fps	gr	fps	gr	fps	psi	Fill
Vihtavuori N570	72.5	2,585	74.5	2,650	76.5	2,710	78.5	2,775	80.5	2,835	64,900	101%
Alliant Reloder 19	66.8	2,590	68.7	2,650	70.5	2,710	72.3	2,770	74.2	2,830	64,900	96%
Alliant Reloder 26	68.8	2,580	70.7	2,640	72.6	2,700	74.5	2,760	76.4	2,825	64,900	94%
Ramshot Magnum	73.7	2,555	75.8	2,620	77.8	2,685	79.9	2,750	81.9	2,815	65,000	101%
Accurate MagPro	71.6	2,550	73.6	2,610	75.6	2,675	77.6	2,740	79.6	2,805	64,800	99%
Ramshot Grand	72.2	2,550	74.2	2,615	76.2	2,675	78.2	2,740	80.2	2,805	64,800	100%
Alliant Reloder 25	70.7	2,550	72.7	2,615	74.6	2,675	76.5	2,735	78.5	2,800	63,800	105%
Hodgdon Retumbo	72.4	2,545	74.4	2,605	76.4	2,665	78.4	2,730	80.4	2,795	64,900	102%
Vihtavuori N568	73.4	2,525	75.5	2,595	77.5	2,660	79.5	2,725	81.6	2,795	64,900	103%
Hodgdon H1000	71.1	2,540	73.1	2,600	75.0	2,660	77.0	2,725	79.0	2,790	63,800	105%
Alliant Reloder 22	66.3	2,540	68.2	2,600	70.0	2,655	71.8	2,715	73.7	2,775	64,900	96%
IMR 8133	73.2	2,515	75.2	2,575	77.3	2,640	79.3	2,705	81.3	2,770	65,000	104%
Hodgdon H4831SC	66.5	2,515	68.3	2,570	70.2	2,630	72.1	2,695	73.9	2,750	64,800	91%
Winchester StaBALL HD	73.0	2,505	75.0	2,565	77.0	2,625	79.1	2,690	81.1	2,750	64,900	101%
Reload Swiss RS76	72.3	2,505	74.3	2,565	76.3	2,625	78.3	2,685	80.3	2,745	64,800	99%
Vihtavuori N565	67.1	2,500	68.9	2,555	70.8	2,615	72.7	2,675	74.5	2,730	64,800	96%
Winchester Supreme 780	66.8	2,490	68.7	2,545	70.5	2,605	72.3	2,660	74.2	2,720	65,000	91%
IMR 4831	62.6	2,480	64.3	2,535	66.1	2,595	67.8	2,650	69.6	2,710	64,800	91%
IMR 7828SSC	65.3	2,470	67.1	2,525	68.9	2,580	70.7	2,640	72.5	2,695	64,800	92%
IMR 7828	64.4	2,435	66.2	2,490	68.0	2,545	69.8	2,600	71.6	2,660	64,900	88%

.300 Winchester Magnum

Winchester introduced the .300 Winchester Magnum in 1963 for its Model 70 rifle. Between 1956 and 1960 Winchester had brought out the .264, .338 and .458 Winchester Magnums. All were based on a shortened and blown-out .375 H&H Magnum case sized for a standard-length action. None was in .30 caliber. Wildcatters filled the gap with the .30-338 Winchester Magnum. Winchester derived its own .30-caliber version from the .338 Winchester Magnum case. The shoulder was moved forward and the neck reduced. This left a neck slightly shorter than the bullet's diameter.

The .300 Win Mag handles bullets from about 110 to 220 grains. Hunters use it on big game from deer to moose. Soon after its introduction it won several 1,000-yard competitions. Military and law enforcement agencies later adopted it as a long-range sniper cartridge. The U.S. Mk 248 Mod 1 match load fires a 220-grain Sierra MatchKing bullet at a nominal 2,850 fps. It remains the most popular .30-caliber magnum among American hunters. Rifles and factory ammunition are widely available.

Cartridge specifications	
Bullet Diameter	**0.308" (7.82 mm)**
Max Case Length	**2.620" (66.55 mm)**
Case Trim Length	**2.610" (66.29 mm)**
Max COAL	**3.340" (84.84 mm)**
Primer Pocket	**Large Rifle**
Standard Twist	**1:10"**
Case Capacity	**93.5 gr H_2O**
Max Pressure	**64,000 psi (SAAMI)**

110 gr Bullet · 25" barrel

COAL: 3.050" • Bullet length: 0.738" • Seat depth: 0.308" • Usable capacity: 88.1 / 93.5 gr H_2O

Powder	STEP 1 · 90%		STEP 2		STEP 3		STEP 4		STEP 5 · LIMIT			
	gr	fps	gr	fps	gr	fps	gr	fps	gr	fps	psi	Fill
Alliant Reloder 16	74.7	3,540	76.8	3,625	78.8	3,705	80.9	3,790	83.0	3,875	63,800	105%
Vihtavuori N550	72.4	3,565	74.4	3,640	76.4	3,720	78.4	3,795	80.4	3,875	63,900	96%
Winchester StaBALL 6.5	75.1	3,545	77.2	3,630	79.3	3,710	81.3	3,790	83.4	3,875	63,900	95%
Hodgdon Leverevolution	67.6	3,555	69.5	3,635	71.3	3,710	73.2	3,790	75.1	3,870	63,900	81%
Accurate 4350	76.1	3,500	78.2	3,590	80.3	3,675	82.4	3,760	84.5	3,850	64,000	100%
IMR 4895	66.9	3,545	68.8	3,625	70.6	3,695	72.5	3,775	74.3	3,850	64,000	87%
Hodgdon SUPERFORMANCE	78.2	3,480	80.4	3,570	82.6	3,665	84.7	3,750	86.9	3,840	63,900	97%
IMR 4350	76.0	3,490	78.1	3,580	80.2	3,665	82.3	3,750	84.4	3,840	64,000	103%
Alliant Reloder 15	67.8	3,520	69.7	3,595	71.5	3,665	73.4	3,740	75.3	3,820	63,800	91%
Alliant Power Pro 2000-MR	70.5	3,495	72.5	3,575	74.4	3,655	76.3	3,730	78.3	3,810	63,900	93%
IMR 4064	66.8	3,500	68.7	3,575	70.5	3,650	72.3	3,720	74.2	3,800	63,900	90%
Alliant Power Pro 4000-MR	77.0	3,440	79.1	3,520	81.3	3,610	83.4	3,695	85.5	3,780	64,000	99%
Hodgdon H4350	74.5	3,425	76.6	3,510	78.7	3,600	80.7	3,680	82.8	3,770	63,800	95%
Vihtavuori N160	76.7	3,430	78.8	3,510	81.0	3,600	83.1	3,685	85.2	3,770	62,700	105%
Accurate 2700	71.4	3,440	73.4	3,520	75.3	3,595	77.3	3,675	79.3	3,760	63,800	92%
Vihtavuori N150	66.9	3,455	68.8	3,535	70.6	3,605	72.5	3,680	74.3	3,755	63,800	95%
Hodgdon Varget	65.3	3,445	67.1	3,520	68.9	3,595	70.7	3,670	72.5	3,745	64,000	86%
Ramshot Hunter	74.9	3,400	77.0	3,485	79.1	3,570	81.1	3,650	83.2	3,735	64,000	100%
IMR 4007 SSC	72.1	3,390	74.1	3,470	76.1	3,555	78.1	3,635	80.1	3,720	63,900	97%
Norma MRP	78.7	3,345	80.9	3,430	83.1	3,515	85.2	3,600	87.4	3,690	63,900	103%

125 gr Bullet · 25" barrel

COAL: 3.250" • Bullet length: 1.079" • Seat depth: 0.449" • Usable capacity: 85.6 / 93.5 gr H_2O

Powder	STEP 1 · 90%		STEP 2		STEP 3		STEP 4		STEP 5 · LIMIT			
	gr	fps	gr	fps	gr	fps	gr	fps	gr	fps	psi	Fill
Hodgdon SUPERFORMANCE	75.2	3,335	77.3	3,415	79.4	3,500	81.5	3,585	83.6	3,670	64,000	96%
Alliant Reloder 16	71.2	3,355	73.2	3,435	75.2	3,510	77.1	3,585	79.1	3,665	63,900	103%
Alliant Reloder 26	79.9	3,315	82.1	3,400	84.3	3,485	86.6	3,580	88.8	3,665	63,900	104%
Winchester StaBALL 6.5	71.9	3,355	73.9	3,430	75.9	3,510	77.9	3,585	79.9	3,665	63,900	94%
Accurate 4350	72.9	3,340	74.9	3,415	77.0	3,500	79.0	3,580	81.0	3,660	63,800	99%
IMR 4350	72.5	3,325	74.5	3,405	76.5	3,480	78.6	3,565	80.6	3,645	63,800	101%
Reload Swiss RS70	77.0	3,300	79.1	3,380	81.3	3,470	83.4	3,555	85.5	3,640	63,800	101%
Vihtavuori N555	74.0	3,310	76.0	3,390	78.1	3,475	80.2	3,560	82.2	3,640	63,900	103%
Norma 204	72.2	3,300	74.2	3,380	76.2	3,460	78.2	3,540	80.2	3,620	64,000	98%
Alliant Power Pro 2000-MR	67.4	3,305	69.3	3,375	71.2	3,450	73.0	3,525	74.9	3,600	64,000	92%
Alliant Reloder 17	69.6	3,275	71.5	3,355	73.4	3,430	75.4	3,515	77.3	3,590	63,900	91%
Hodgdon H4350	71.2	3,275	73.2	3,355	75.2	3,435	77.1	3,510	79.1	3,590	64,000	93%
Alliant Reloder 15	64.4	3,305	66.2	3,375	68.0	3,445	69.7	3,515	71.5	3,585	63,900	89%
Alliant Reloder 23	74.5	3,260	76.6	3,340	78.7	3,425	80.7	3,500	82.8	3,585	60,800	105%
IMR 7828	79.5	3,230	81.7	3,315	83.9	3,405	86.1	3,495	88.3	3,585	63,800	104%
IMR 4064	63.5	3,290	65.3	3,360	67.0	3,430	68.8	3,500	70.5	3,570	63,800	88%
Norma MRP	75.6	3,205	77.7	3,290	79.8	3,370	81.9	3,450	84.0	3,535	63,900	102%
Winchester StaBALL Match	63.5	3,255	65.3	3,325	67.0	3,390	68.8	3,465	70.6	3,535	64,000	93%
IMR 4451	69.1	3,190	71.0	3,265	72.9	3,340	74.9	3,420	76.8	3,495	64,000	93%
Winchester 760	67.8	3,190	69.7	3,265	71.5	3,335	73.4	3,410	75.3	3,485	63,800	90%

150 gr Bullet · 25" barrel

COAL: 3.220" • Bullet length: 1.201" • Seat depth: 0.601" • Usable capacity: 83.1 / 93.5 gr H_2O

Powder	STEP 1 · 90%		STEP 2		STEP 3		STEP 4		STEP 5 · LIMIT			
	gr	fps	gr	fps	gr	fps	gr	fps	gr	fps	psi	Fill
Alliant Reloder 26	76.0	3,120	78.1	3,200	80.2	3,280	82.3	3,360	84.4	3,440	63,900	102%
Vihtavuori N560	75.2	3,125	77.3	3,195	79.3	3,270	81.4	3,345	83.5	3,420	62,300	105%
Hodgdon SUPERFORMANCE	71.3	3,110	73.3	3,185	75.3	3,260	77.2	3,335	79.2	3,410	63,900	93%
Reload Swiss RS70	73.1	3,095	75.1	3,170	77.2	3,250	79.2	3,330	81.2	3,405	63,800	98%
Alliant Reloder 22	73.4	3,090	75.4	3,165	77.5	3,245	79.5	3,320	81.5	3,400	63,900	104%
Accurate 4350	68.9	3,100	70.8	3,170	72.8	3,245	74.7	3,320	76.6	3,390	64,000	96%
Alliant Reloder 23	71.9	3,090	73.9	3,165	75.9	3,240	77.9	3,315	79.9	3,390	63,800	104%
IMR 7828SSC	75.0	3,075	77.1	3,155	79.2	3,235	81.2	3,310	83.3	3,390	63,800	104%
IMR 4350	68.1	3,080	70.0	3,150	71.9	3,220	73.8	3,295	75.7	3,365	63,900	98%
Norma 204	68.4	3,060	70.3	3,135	72.2	3,205	74.1	3,275	76.0	3,350	63,800	96%
Alliant Power Pro 4000-MR	70.1	3,050	72.0	3,120	74.0	3,195	76.0	3,270	77.9	3,345	63,800	95%
Alliant Reloder 17	66.0	3,050	67.8	3,120	69.7	3,195	71.5	3,265	73.3	3,335	63,900	88%
IMR 4955	70.5	3,030	72.5	3,105	74.4	3,180	76.3	3,250	78.3	3,330	63,900	95%
Hodgdon H4350	66.7	3,035	68.5	3,105	70.4	3,175	72.3	3,250	74.1	3,315	63,900	90%
Accurate MagPro	77.0	2,990	79.1	3,065	81.3	3,145	83.4	3,225	85.5	3,310	61,100	105%
Hodgdon Hybrid 100V	65.6	3,020	67.4	3,090	69.3	3,165	71.1	3,235	72.9	3,305	63,800	98%
Accurate 3100	71.2	2,975	73.2	3,055	75.2	3,130	77.1	3,200	79.1	3,280	64,000	103%
IMR 4007 SSC	65.4	3,000	67.2	3,070	69.1	3,140	70.9	3,210	72.7	3,280	63,800	94%
IMR 4064	59.1	2,990	60.8	3,055	62.4	3,115	64.0	3,180	65.7	3,240	63,800	85%
IMR 4451	65.3	2,965	67.1	3,030	68.9	3,100	70.8	3,170	72.6	3,240	63,800	91%

165 gr Bullet · 25" barrel

COAL: 3.320" • Bullet length: 1.277" • Seat depth: 0.576" • Usable capacity: 83.2 / 93.5 gr H_2O

Powder	STEP 1 · 90%		STEP 2		STEP 3		STEP 4		STEP 5 · LIMIT			
	gr	fps	gr	fps	gr	fps	gr	fps	gr	fps	psi	Fill
Alliant Reloder 26	74.4	3,015	76.5	3,090	78.6	3,165	80.6	3,240	82.7	3,320	64,000	100%
Vihtavuori N560	73.4	3,005	75.4	3,070	77.5	3,145	79.5	3,215	81.5	3,285	63,800	102%
Reload Swiss RS70	71.6	2,985	73.6	3,060	75.6	3,130	77.6	3,205	79.6	3,280	63,800	97%
Alliant Reloder 22	71.8	2,980	73.8	3,055	75.8	3,125	77.8	3,200	79.8	3,275	63,900	102%
Hodgdon SUPERFORMANCE	69.7	2,990	71.6	3,060	73.6	3,130	75.5	3,200	77.4	3,270	63,900	91%
IMR 7828SSC	73.2	2,970	75.2	3,040	77.3	3,115	79.3	3,190	81.3	3,265	63,800	102%
Accurate MagPro	77.0	2,945	79.1	3,025	81.3	3,105	83.4	3,180	85.5	3,260	63,900	105%
Alliant Reloder 23	70.4	2,975	72.4	3,045	74.3	3,115	76.3	3,185	78.2	3,255	64,000	102%
IMR 4350	66.2	2,945	68.0	3,010	69.9	3,080	71.8	3,145	73.6	3,215	63,900	95%
Vihtavuori N555	66.4	2,940	68.3	3,010	70.1	3,075	72.0	3,145	73.8	3,210	64,000	95%
Alliant Reloder 17	64.6	2,930	66.4	2,995	68.2	3,065	70.0	3,135	71.8	3,200	63,900	87%
Vihtavuori N165	71.7	2,910	73.7	2,980	75.7	3,045	77.7	3,115	79.7	3,190	64,000	103%
Hodgdon H4831	70.7	2,905	72.7	2,975	74.6	3,045	76.5	3,115	78.5	3,185	63,800	101%
Vihtavuori N565	74.3	2,890	76.3	2,960	78.4	3,035	80.5	3,110	82.5	3,185	63,800	104%
Hodgdon Hybrid 100V	64.4	2,910	66.2	2,975	68.0	3,045	69.8	3,115	71.6	3,180	63,900	97%
Vihtavuori N170	75.5	2,900	77.6	2,970	79.7	3,035	81.8	3,105	83.9	3,180	62,300	105%
Hodgdon H4350	64.8	2,905	66.6	2,970	68.4	3,035	70.2	3,105	72.0	3,170	63,800	87%
Vihtavuori N160	67.5	2,900	69.4	2,970	71.3	3,035	73.1	3,100	75.0	3,170	63,800	98%
Ramshot Hunter	66.5	2,885	68.3	2,950	70.2	3,020	72.1	3,085	73.9	3,150	63,900	94%
IMR 4451	63.9	2,845	65.7	2,910	67.5	2,975	69.2	3,040	71.0	3,105	63,900	89%

180 gr Bullet · 25" barrel

COAL: 3.320" • Bullet length: 1.321" • Seat depth: 0.621" • Usable capacity: 82.3 / 93.5 gr H_2O

Powder	STEP 1 · 90%		STEP 2		STEP 3		STEP 4		STEP 5 · LIMIT			
	gr	fps	gr	fps	gr	fps	gr	fps	gr	fps	psi	Fill
Alliant Reloder 26	72.5	2,910	74.5	2,980	76.5	3,050	78.5	3,120	80.5	3,195	63,800	98%
Reload Swiss RS70	69.8	2,880	71.8	2,950	73.7	3,015	75.6	3,085	77.6	3,160	63,900	95%
Reload Swiss RS76	77.0	2,865	79.2	2,940	81.3	3,010	83.4	3,085	85.6	3,160	63,900	105%
Accurate MagPro	75.3	2,855	77.4	2,930	79.5	3,005	81.6	3,080	83.7	3,155	64,000	104%
Ramshot Magnum	77.5	2,850	79.7	2,925	81.8	3,000	83.9	3,075	86.1	3,155	63,800	105%
Alliant Reloder 22	69.9	2,875	71.9	2,945	73.8	3,010	75.8	3,085	77.7	3,150	63,900	100%
Hodgdon SUPERFORMANCE	67.8	2,870	69.7	2,940	71.5	3,005	73.4	3,070	75.3	3,140	64,000	90%
Vihtavuori N560	70.7	2,865	72.7	2,935	74.7	3,000	76.6	3,065	78.6	3,130	63,800	100%
Alliant Reloder 23	68.4	2,855	70.3	2,920	72.2	2,985	74.1	3,055	76.0	3,120	63,900	100%
Vihtavuori N570	75.5	2,810	77.6	2,880	79.7	2,955	81.8	3,030	83.9	3,105	62,900	105%
Winchester StaBALL HD	76.3	2,795	78.4	2,865	80.5	2,940	82.7	3,015	84.8	3,085	62,600	105%
Alliant Power Pro 4000-MR	66.9	2,820	68.8	2,885	70.6	2,950	72.5	3,015	74.3	3,080	63,900	92%
IMR 4350	64.2	2,820	66.0	2,885	67.8	2,945	69.5	3,005	71.3	3,070	63,900	93%
Hodgdon H4831	68.8	2,795	70.7	2,865	72.6	2,930	74.5	3,000	76.4	3,065	64,000	100%
Hodgdon H4831SC	68.3	2,795	70.2	2,860	72.1	2,925	74.0	2,995	75.9	3,060	63,900	93%
Hodgdon Hybrid 100V	62.9	2,800	64.7	2,865	66.4	2,930	68.2	2,995	69.9	3,060	64,000	95%
Accurate 3100	67.8	2,775	69.7	2,845	71.5	2,910	73.4	2,975	75.3	3,045	63,800	99%
Hodgdon H4350	62.7	2,780	64.5	2,845	66.2	2,905	68.0	2,970	69.7	3,030	63,800	85%
Vihtavuori N160	65.4	2,775	67.2	2,840	69.1	2,905	70.9	2,965	72.7	3,030	63,900	96%
IMR 4451	62.1	2,730	63.8	2,790	65.5	2,850	67.3	2,915	69.0	2,975	63,800	87%

200 gr Bullet · 25" barrel

COAL: 3.338" • Bullet length: 1.489" • Seat depth: 0.770" • Usable capacity: 79.9 / 93.5 gr H_2O

Powder	STEP 1 · 90%		STEP 2		STEP 3		STEP 4		STEP 5 · LIMIT			
	gr	fps	gr	fps	gr	fps	gr	fps	gr	fps	psi	Fill
Alliant Reloder 26	69.3	2,760	71.2	2,830	73.2	2,895	75.1	2,965	77.0	3,030	64,000	97%
Accurate MagPro	72.4	2,730	74.4	2,800	76.4	2,870	78.4	2,940	80.4	3,010	63,800	103%
Ramshot Magnum	74.4	2,725	76.5	2,800	78.6	2,870	80.6	2,940	82.7	3,010	63,800	104%
Reload Swiss RS76	73.9	2,725	76.0	2,790	78.0	2,860	80.0	2,925	82.1	3,000	63,800	104%
Alliant Reloder 22	66.9	2,730	68.8	2,795	70.6	2,855	72.5	2,925	74.3	2,990	64,000	99%
Reload Swiss RS70	66.8	2,730	68.7	2,800	70.5	2,860	72.3	2,925	74.2	2,990	63,900	94%
Vihtavuori N570	72.6	2,710	74.6	2,780	76.7	2,850	78.7	2,920	80.7	2,990	64,000	104%
Alliant Reloder 23	65.3	2,700	67.1	2,760	68.9	2,825	70.7	2,885	72.5	2,950	63,800	98%
Vihtavuori N560	67.1	2,700	68.9	2,760	70.8	2,820	72.7	2,885	74.5	2,945	63,900	97%
Accurate 4350	62.2	2,685	63.9	2,740	65.7	2,805	67.4	2,865	69.1	2,925	64,000	90%
Alliant Reloder 19	64.4	2,675	66.2	2,740	68.0	2,800	69.7	2,865	71.5	2,925	64,000	95%
IMR 4955	64.4	2,670	66.2	2,735	68.0	2,795	69.8	2,860	71.6	2,925	63,900	90%
Hodgdon H4831SC	65.3	2,650	67.1	2,710	68.9	2,770	70.8	2,835	72.6	2,900	63,900	91%
Vihtavuori N568	72.9	2,615	74.9	2,685	77.0	2,755	79.0	2,825	81.0	2,900	61,800	105%
IMR 4350	61.0	2,655	62.7	2,715	64.4	2,770	66.1	2,830	67.8	2,890	64,000	91%
Vihtavuori N555	60.2	2,645	61.9	2,705	63.6	2,765	65.2	2,820	66.9	2,875	63,800	90%
IMR 7977	68.9	2,610	70.8	2,670	72.7	2,735	74.6	2,800	76.5	2,870	63,900	104%
Vihtavuori N165	66.0	2,630	67.8	2,685	69.7	2,750	71.5	2,810	73.3	2,870	63,800	98%
Hodgdon H4350	59.6	2,620	61.3	2,680	62.9	2,735	64.5	2,795	66.2	2,855	63,800	84%
Ramshot Hunter	61.7	2,615	63.4	2,670	65.1	2,730	66.8	2,790	68.5	2,845	63,900	91%

210 gr Bullet · 25" barrel

COAL: 3.340" • Bullet length: 1.474" • Seat depth: 0.754" • Usable capacity: 80.2 / 93.5 gr H_2O

Powder	STEP 1 · 90%		STEP 2		STEP 3		STEP 4		STEP 5 · LIMIT			
	gr	fps	gr	fps	gr	fps	gr	fps	gr	fps	psi	Fill
Alliant Reloder 26	68.5	2,705	70.4	2,765	72.3	2,830	74.2	2,895	76.1	2,965	64,000	95%
Ramshot Magnum	73.9	2,685	76.0	2,755	78.0	2,820	80.0	2,890	82.1	2,960	64,000	103%
Accurate MagPro	71.8	2,680	73.8	2,750	75.8	2,815	77.8	2,885	79.8	2,955	63,800	102%
Hodgdon Retumbo	72.8	2,685	74.8	2,750	76.8	2,815	78.9	2,890	80.9	2,955	62,600	105%
Reload Swiss RS76	73.3	2,670	75.3	2,735	77.3	2,800	79.4	2,870	81.4	2,935	63,900	102%
Vihtavuori N570	71.6	2,660	73.6	2,725	75.6	2,795	77.6	2,860	79.6	2,930	63,900	102%
Reload Swiss RS70	66.1	2,675	67.9	2,735	69.8	2,800	71.6	2,860	73.4	2,925	63,900	92%
Alliant Reloder 22	66.1	2,670	67.9	2,730	69.8	2,795	71.6	2,855	73.4	2,920	63,900	97%
IMR 4831	63.9	2,660	65.7	2,725	67.5	2,785	69.2	2,845	71.0	2,910	63,900	95%
Alliant Reloder 25	69.4	2,640	71.3	2,705	73.3	2,770	75.2	2,835	77.1	2,900	62,400	105%
IMR 8133	72.8	2,625	74.8	2,690	76.8	2,755	78.9	2,830	80.9	2,895	61,900	105%
IMR 7828	66.9	2,640	68.8	2,705	70.6	2,765	72.5	2,825	74.3	2,890	63,900	93%
Alliant Reloder 23	64.4	2,635	66.2	2,695	68.0	2,755	69.8	2,815	71.6	2,875	63,900	97%
Winchester Supreme 780	66.7	2,610	68.5	2,670	70.4	2,735	72.3	2,795	74.1	2,860	64,000	93%
Hodgdon H4831SC	64.6	2,590	66.4	2,650	68.2	2,710	70.0	2,770	71.8	2,830	63,900	90%
Accurate 3100	64.0	2,580	65.8	2,640	67.5	2,700	69.3	2,760	71.1	2,825	63,900	96%
Hodgdon Hybrid 100V	59.7	2,595	61.4	2,655	63.0	2,710	64.7	2,770	66.3	2,825	63,800	93%
IMR 4350	60.1	2,585	61.8	2,640	63.5	2,700	65.1	2,755	66.8	2,815	63,900	89%
Norma MRP	64.3	2,580	66.1	2,640	67.8	2,695	69.6	2,755	71.4	2,815	64,000	93%
Ramshot Hunter	60.8	2,545	62.5	2,605	64.2	2,660	65.9	2,715	67.6	2,775	63,900	90%

220 gr Bullet · 25" barrel

COAL: 3.340" • Bullet length: 1.575" • Seat depth: 0.855" • Usable capacity: 78.3 / 93.5 gr H_2O

Powder	STEP 1 · 90%		STEP 2		STEP 3		STEP 4		STEP 5 · LIMIT			
	gr	fps	gr	fps	gr	fps	gr	fps	gr	fps	psi	Fill
Accurate MagPro	70.1	2,615	72.0	2,680	74.0	2,750	76.0	2,820	77.9	2,885	64,000	102%
Hodgdon Retumbo	71.1	2,620	73.1	2,685	75.0	2,750	77.0	2,815	79.0	2,885	62,900	105%
Ramshot Magnum	72.0	2,620	74.0	2,685	76.0	2,750	78.0	2,820	80.0	2,885	63,900	102%
Alliant Reloder 26	66.6	2,630	68.4	2,690	70.3	2,755	72.2	2,820	74.0	2,880	63,900	95%
Reload Swiss RS76	71.4	2,595	73.4	2,660	75.3	2,720	77.3	2,790	79.3	2,855	63,800	102%
Vihtavuori N570	69.7	2,600	71.6	2,660	73.6	2,730	75.5	2,790	77.4	2,855	63,800	102%
Reload Swiss RS70	64.4	2,600	66.2	2,660	68.0	2,725	69.7	2,780	71.5	2,845	64,000	92%
Alliant Reloder 22	64.3	2,595	66.1	2,655	67.8	2,710	69.6	2,775	71.4	2,835	63,800	97%
Vihtavuori N568	71.5	2,565	73.5	2,630	75.5	2,700	77.4	2,765	79.4	2,835	64,000	105%
Alliant Reloder 25	67.8	2,575	69.7	2,640	71.5	2,700	73.4	2,765	75.3	2,830	62,800	105%
IMR 8133	71.1	2,565	73.1	2,630	75.0	2,690	77.0	2,760	79.0	2,830	62,200	105%
Winchester StaBALL HD	71.3	2,565	73.3	2,630	75.3	2,695	77.2	2,755	79.2	2,825	63,900	103%
Hodgdon H1000	68.1	2,560	70.0	2,625	71.9	2,685	73.8	2,750	75.7	2,815	61,500	105%
IMR 7828	65.0	2,565	66.8	2,625	68.6	2,685	70.4	2,745	72.2	2,805	63,900	93%
Alliant Reloder 23	62.6	2,555	64.3	2,615	66.1	2,675	67.8	2,730	69.6	2,790	63,800	96%
Winchester Supreme 780	64.9	2,540	66.7	2,600	68.5	2,660	70.3	2,720	72.1	2,780	64,000	93%
Vihtavuori N560	63.9	2,545	65.7	2,605	67.5	2,660	69.2	2,715	71.0	2,775	63,900	95%
IMR 7977	66.5	2,490	68.3	2,550	70.2	2,615	72.1	2,675	73.9	2,740	63,900	102%
Norma MRP	62.5	2,505	64.2	2,560	66.0	2,620	67.7	2,675	69.4	2,735	63,900	92%
IMR 4350	58.3	2,505	59.9	2,560	61.5	2,615	63.2	2,670	64.8	2,725	63,800	89%

230 gr Bullet · 25" barrel

COAL: 3.340" • Bullet length: 1.681" • Seat depth: 0.961" • Usable capacity: 76.9 / 93.5 gr H_2O

Powder	STEP 1 · 90%		STEP 2		STEP 3		STEP 4		STEP 5 · LIMIT			
	gr	fps	gr	fps	gr	fps	gr	fps	gr	fps	psi	Fill
Hodgdon Retumbo	69.8	2,570	71.8	2,630	73.7	2,695	75.6	2,760	77.6	2,825	63,400	105%
Accurate MagPro	68.7	2,560	70.6	2,625	72.5	2,690	74.4	2,755	76.3	2,820	63,900	101%
Ramshot Magnum	70.5	2,560	72.5	2,630	74.4	2,690	76.3	2,755	78.3	2,820	63,800	102%
Alliant Reloder 26	65.1	2,565	66.9	2,625	68.7	2,685	70.5	2,745	72.3	2,810	63,800	94%
Vihtavuori N570	68.1	2,545	70.0	2,605	71.9	2,670	73.8	2,730	75.7	2,795	64,000	101%
Reload Swiss RS76	69.9	2,535	71.9	2,600	73.8	2,660	75.8	2,725	77.7	2,790	63,900	102%
Vihtavuori N568	69.9	2,515	71.9	2,580	73.8	2,645	75.8	2,715	77.7	2,780	63,800	104%
Alliant Reloder 22	62.8	2,530	64.5	2,585	66.3	2,645	68.0	2,705	69.8	2,765	63,900	96%
Ramshot Grand	67.4	2,505	69.3	2,570	71.2	2,630	73.0	2,690	74.9	2,755	63,900	99%
IMR 7828SSC	63.5	2,515	65.3	2,575	67.0	2,630	68.8	2,690	70.5	2,745	63,900	95%
IMR 7828	63.5	2,505	65.3	2,565	67.0	2,620	68.8	2,680	70.5	2,735	63,900	92%
Alliant Reloder 19	60.7	2,490	62.4	2,550	64.1	2,605	65.7	2,660	67.4	2,720	63,900	93%
Alliant Reloder 23	61.2	2,495	62.9	2,550	64.6	2,605	66.3	2,665	68.0	2,720	63,800	96%
Vihtavuori N560	62.3	2,480	64.0	2,535	65.8	2,590	67.5	2,645	69.2	2,700	63,900	94%
Hodgdon H4831SC	61.5	2,455	63.2	2,515	64.9	2,570	66.6	2,625	68.3	2,685	63,900	89%
Hodgdon H4831	61.5	2,455	63.2	2,510	64.9	2,565	66.6	2,620	68.3	2,680	63,900	95%
Hodgdon Hybrid 100V	56.9	2,460	58.5	2,515	60.0	2,565	61.6	2,620	63.2	2,680	63,800	92%
Vihtavuori N565	62.6	2,455	64.3	2,510	66.1	2,565	67.8	2,620	69.6	2,680	63,900	95%
IMR 7977	65.1	2,435	66.9	2,495	68.7	2,555	70.5	2,615	72.3	2,675	63,800	102%
Norma MRP	61.0	2,440	62.7	2,495	64.4	2,550	66.1	2,610	67.8	2,665	63,900	92%

.300 WSM

Winchester introduced the .300 Winchester Short Magnum (WSM) in 2001. Its unbelted case is based on the .404 Jeffery. It uses the base diameter of the common belted magnum case. This leaves a slightly rebated rim. The cartridge headspaces on a 35-degree shoulder. Its short and wide powder column was designed to duplicate .300 Winchester Magnum ballistics in a short-action rifle. It has a 2.100-inch case and a 2.860-inch overall length. Its development involved patent disputes over the short-magnum concept.

Factory loads use bullets of 150 to 200 grains. The 180-grain loads run at about 3,000 fps or slightly more. This is close to the .300 Winchester Magnum. The WSM achieves it with less powder and somewhat less recoil. The short action also offers a lighter and stiffer rifle with a shorter bolt throw. The cartridge is suitable for North American big game including elk and moose. Major ammunition makers still produce it. Its case also served as the basis for the .270 WSM, 7mm WSM and .325 WSM.

Cartridge specifications	
Bullet Diameter	**0.308" (7.82 mm)**
Max Case Length	**2.100" (53.34 mm)**
Case Trim Length	**2.090" (53.09 mm)**
Max COAL	**2.860" (72.64 mm)**
Primer Pocket	**Large Rifle**
Standard Twist	**1:10"**
Case Capacity	**79.6 gr H_2O**
Max Pressure	**65,000 psi (SAAMI)**

110 gr Bullet · 25" barrel

COAL: 2.720" • Bullet length: 0.928" • Seat depth: 0.308" • Usable capacity: 73.8 / 79.6 gr H_2O

Powder	STEP 1 · 90%		STEP 2		STEP 3		STEP 4		STEP 5 · LIMIT			
	gr	fps	gr	fps	gr	fps	gr	fps	gr	fps	psi	Fill
Hodgdon Leverevolution	63.4	3,565	65.2	3,650	66.9	3,725	68.7	3,810	70.4	3,890	64,900	91%
Ramshot Big Game	67.9	3,510	69.8	3,595	71.7	3,685	73.5	3,765	75.4	3,850	64,900	104%
Accurate 2700	68.3	3,495	70.2	3,580	72.1	3,665	74.0	3,755	75.9	3,840	65,000	105%
Reload Swiss RS52	63.2	3,505	65.0	3,585	66.7	3,665	68.5	3,750	70.2	3,830	64,900	100%
Hodgdon BL-C(2)	63.6	3,495	65.4	3,575	67.2	3,660	68.9	3,740	70.7	3,825	64,900	96%
Hodgdon CFE 223	64.5	3,490	66.3	3,570	68.1	3,650	69.9	3,735	71.7	3,815	64,900	99%
Winchester 748	63.6	3,480	65.4	3,565	67.2	3,645	68.9	3,725	70.7	3,805	64,800	98%
Vihtavuori N540	62.5	3,495	64.2	3,570	66.0	3,650	67.7	3,725	69.4	3,800	64,800	100%
Alliant Reloder 15	62.7	3,470	64.5	3,550	66.2	3,625	68.0	3,710	69.7	3,785	64,800	101%
IMR 4064	61.6	3,445	63.3	3,525	65.0	3,600	66.7	3,675	68.4	3,755	64,900	99%
Reload Swiss RS50	63.0	3,430	64.8	3,510	66.5	3,585	68.3	3,670	70.0	3,745	64,900	100%
Norma 202	59.6	3,430	61.3	3,505	62.9	3,575	64.5	3,645	66.2	3,725	64,900	97%
Alliant Power Pro Varmint	59.6	3,410	61.3	3,490	62.9	3,560	64.5	3,635	66.2	3,710	64,900	95%
Alliant AR-Comp	57.1	3,420	58.7	3,490	60.3	3,565	61.8	3,630	63.4	3,705	64,800	92%
Hodgdon H414	66.5	3,370	68.3	3,450	70.2	3,535	72.1	3,620	73.9	3,705	64,900	102%
Vihtavuori N135	58.1	3,415	59.7	3,485	61.3	3,555	63.0	3,635	64.6	3,705	64,900	95%
Hodgdon Benchmark	57.0	3,410	58.6	3,480	60.1	3,550	61.7	3,620	63.3	3,695	64,800	94%
Hodgdon Varget	60.0	3,385	61.7	3,465	63.4	3,540	65.0	3,615	66.7	3,695	64,900	94%
Winchester 760	66.6	3,355	68.4	3,435	70.3	3,520	72.2	3,605	74.0	3,690	64,900	103%
Vihtavuori N150	60.2	3,330	61.9	3,405	63.6	3,485	65.2	3,555	66.9	3,635	64,900	102%

125 gr Bullet · 25" barrel

COAL: 2.717" • Bullet length: 1.070" • Seat depth: 0.453" • Usable capacity: 71.8 / 79.6 gr H_2O

Powder	STEP 1 · 90%		STEP 2		STEP 3		STEP 4		STEP 5 · LIMIT			
	gr	fps	gr	fps	gr	fps	gr	fps	gr	fps	psi	Fill
Hodgdon Leverevolution	60.7	3,365	62.4	3,440	64.1	3,520	65.7	3,590	67.4	3,665	65,000	90%
Accurate 2700	65.7	3,325	67.5	3,405	69.3	3,485	71.2	3,570	73.0	3,650	64,900	104%
Ramshot Big Game	65.2	3,335	67.0	3,415	68.8	3,490	70.6	3,570	72.4	3,650	65,000	103%
Vihtavuori N550	64.1	3,325	65.9	3,400	67.7	3,480	69.4	3,550	71.2	3,630	64,800	104%
Reload Swiss RS52	60.7	3,320	62.4	3,395	64.1	3,475	65.7	3,545	67.4	3,625	65,000	99%
Accurate 4064	60.9	3,310	62.6	3,385	64.3	3,460	66.0	3,540	67.7	3,615	64,800	105%
Hodgdon BL-C(2)	61.1	3,310	62.8	3,385	64.5	3,465	66.2	3,540	67.9	3,615	64,800	95%
Hodgdon CFE 223	61.8	3,300	63.5	3,375	65.3	3,455	67.0	3,530	68.7	3,605	65,000	97%
Hodgdon H380	63.4	3,265	65.2	3,345	66.9	3,420	68.7	3,500	70.4	3,575	64,800	104%
Alliant Reloder 15	59.8	3,280	61.5	3,350	63.1	3,420	64.8	3,495	66.4	3,570	65,000	99%
Alliant TS 15.5	59.3	3,265	61.0	3,345	62.6	3,415	64.3	3,490	65.9	3,565	64,800	99%
Vihtavuori N540	59.3	3,275	61.0	3,350	62.6	3,420	64.3	3,490	65.9	3,560	64,900	97%
IMR 4064	58.6	3,250	60.2	3,320	61.8	3,390	63.5	3,465	65.1	3,535	64,800	97%
Hodgdon H414	63.9	3,215	65.7	3,290	67.5	3,370	69.2	3,445	71.0	3,525	64,800	101%
Hodgdon H4350	65.5	3,200	67.3	3,280	69.2	3,365	71.0	3,445	72.8	3,525	65,000	102%
IMR 4166	56.9	3,240	58.5	3,310	60.0	3,375	61.6	3,450	63.2	3,520	64,900	98%
Shooters World The Creed	59.1	3,230	60.8	3,305	62.4	3,375	64.0	3,445	65.7	3,520	64,900	95%
Winchester 760	64.0	3,200	65.8	3,280	67.5	3,355	69.3	3,435	71.1	3,515	64,700	102%
Shooters World Precision Rifle	58.4	3,210	60.0	3,280	61.7	3,355	63.3	3,430	64.9	3,500	64,800	100%
Hodgdon Varget	57.3	3,205	58.9	3,275	60.5	3,345	62.1	3,415	63.7	3,490	64,800	92%

150 gr Bullet · 25" barrel

COAL: 2.615" • Bullet length: 1.197" • Seat depth: 0.682" • Usable capacity: 68.3 / 79.6 gr H_2O

Powder	STEP 1 · 90%		STEP 2		STEP 3		STEP 4		STEP 5 · LIMIT			
	gr	fps	gr	fps	gr	fps	gr	fps	gr	fps	psi	Fill
Winchester StaBALL 6.5	64.0	3,115	65.8	3,190	67.5	3,265	69.3	3,340	71.1	3,420	63,300	105%
Hodgdon SUPERFORMANCE	65.9	3,070	67.7	3,150	69.6	3,230	71.4	3,310	73.2	3,390	64,700	105%
Accurate 2700	61.5	3,060	63.2	3,130	64.9	3,205	66.6	3,280	68.3	3,355	65,000	102%
Ramshot Big Game	60.7	3,050	62.4	3,125	64.1	3,195	65.7	3,265	67.4	3,335	64,700	101%
Hodgdon Leverevolution	56.2	3,050	57.8	3,120	59.3	3,185	60.9	3,255	62.4	3,320	64,800	87%
Reload Swiss RS52	56.5	3,030	58.1	3,100	59.6	3,165	61.2	3,235	62.8	3,305	64,800	97%
Hodgdon BL-C(2)	57.1	3,025	58.7	3,095	60.3	3,165	61.8	3,230	63.4	3,300	64,800	93%
Alliant Power Pro 2000-MR	58.6	3,010	60.2	3,080	61.8	3,145	63.5	3,220	65.1	3,290	64,900	100%
Vihtavuori N550	58.8	3,010	60.4	3,075	62.0	3,145	63.7	3,210	65.3	3,280	64,800	100%
Hodgdon H380	58.9	2,990	60.5	3,055	62.2	3,125	63.8	3,195	65.4	3,265	64,800	102%
Hodgdon H4350	60.8	2,970	62.5	3,040	64.2	3,110	65.8	3,180	67.5	3,255	64,900	100%
Hodgdon H414	59.7	2,965	61.4	3,035	63.0	3,105	64.7	3,175	66.3	3,245	64,700	99%
IMR 4955	63.8	2,935	65.6	3,015	67.3	3,085	69.1	3,165	70.9	3,245	64,800	104%
Winchester 760	59.9	2,955	61.5	3,025	63.2	3,095	64.8	3,165	66.5	3,235	64,900	100%
Alliant Reloder 15	55.0	2,970	56.5	3,035	58.0	3,095	59.6	3,165	61.1	3,230	65,000	95%
Winchester StaBALL Match	55.4	2,960	56.9	3,025	58.5	3,095	60.0	3,155	61.5	3,220	64,900	101%
Reload Swiss RS50	56.2	2,945	57.8	3,010	59.3	3,075	60.9	3,140	62.4	3,205	64,800	96%
Vihtavuori N540	54.4	2,950	55.9	3,010	57.4	3,075	58.9	3,135	60.4	3,200	64,800	94%
Hodgdon H4831SC	64.1	2,885	65.9	2,960	67.7	3,035	69.4	3,110	71.2	3,185	62,100	105%
Shooters World Precision Rifle	54.1	2,920	55.6	2,985	57.1	3,050	58.6	3,115	60.1	3,180	64,900	98%

165 gr Bullet · 25" barrel

COAL: 2.810" • Bullet length: 1.279" • Seat depth: 0.569" • Usable capacity: 69.4 / 79.6 gr H_2O

Powder	STEP 1 · 90%		STEP 2		STEP 3		STEP 4		STEP 5 · LIMIT			
	gr	fps	gr	fps	gr	fps	gr	fps	gr	fps	psi	Fill
Winchester StaBALL 6.5	63.6	3,005	65.4	3,080	67.2	3,150	68.9	3,220	70.7	3,295	64,700	103%
Hodgdon SUPERFORMANCE	65.3	2,975	67.1	3,050	68.9	3,125	70.8	3,205	72.6	3,280	64,800	102%
Accurate 4350	62.5	2,945	64.2	3,010	66.0	3,085	67.7	3,155	69.4	3,225	64,700	105%
Accurate 2700	60.8	2,940	62.5	3,010	64.2	3,075	65.8	3,145	67.5	3,215	64,800	99%
Ramshot Big Game	59.8	2,920	61.5	2,990	63.1	3,055	64.8	3,125	66.4	3,190	64,900	97%
Reload Swiss RS62	63.0	2,890	64.8	2,965	66.5	3,035	68.3	3,110	70.0	3,185	63,700	105%
Reload Swiss RS70	64.9	2,890	66.7	2,965	68.5	3,035	70.3	3,110	72.1	3,185	64,800	105%
IMR 4350	61.0	2,895	62.7	2,965	64.4	3,035	66.1	3,105	67.8	3,175	64,400	105%
Hodgdon BL-C(2)	56.3	2,895	57.9	2,960	59.5	3,025	61.0	3,090	62.6	3,155	64,900	90%
Reload Swiss RS52	55.7	2,900	57.3	2,965	58.8	3,025	60.4	3,095	61.9	3,155	65,000	94%
Reload Swiss RS60	59.3	2,870	61.0	2,940	62.6	3,010	64.3	3,080	65.9	3,145	64,900	98%
Ramshot Hunter	61.7	2,855	63.4	2,920	65.2	2,995	66.9	3,065	68.6	3,135	62,600	105%
Hodgdon H4350	59.7	2,855	61.4	2,925	63.0	2,990	64.7	3,060	66.3	3,125	64,800	96%
Hodgdon H414	59.0	2,855	60.6	2,920	62.3	2,985	63.9	3,055	65.5	3,120	64,800	96%
Hodgdon CFE 223	56.3	2,855	57.8	2,915	59.4	2,980	61.0	3,045	62.5	3,105	64,900	92%
Winchester 760	59.0	2,840	60.6	2,905	62.3	2,970	63.9	3,035	65.6	3,105	64,800	97%
Vihtavuori N550	57.1	2,855	58.7	2,915	60.3	2,980	61.8	3,040	63.4	3,100	64,900	96%
IMR 4831	61.0	2,810	62.7	2,880	64.4	2,950	66.1	3,025	67.8	3,095	61,500	105%
Winchester StaBALL Match	54.5	2,820	56.0	2,880	57.5	2,945	59.0	3,005	60.5	3,065	64,900	98%
Alliant Reloder 15	53.6	2,820	55.1	2,880	56.6	2,940	58.1	3,000	59.6	3,060	64,900	92%

180 gr Bullet · 25" barrel

COAL: 2.810" • Bullet length: 1.325" • Seat depth: 0.615" • Usable capacity: 68.6 / 79.6 gr H_2O

Powder	STEP 1 · 90%		STEP 2		STEP 3		STEP 4		STEP 5 · LIMIT			
	gr	fps	gr	fps	gr	fps	gr	fps	gr	fps	psi	Fill
Hodgdon SUPERFORMANCE	63.7	2,870	65.5	2,940	67.3	3,015	69.0	3,080	70.8	3,155	65,000	101%
Winchester StaBALL 6.5	61.8	2,875	63.5	2,940	65.3	3,015	67.0	3,080	68.7	3,150	64,900	101%
Accurate 4350	60.8	2,825	62.5	2,895	64.2	2,960	65.9	3,030	67.6	3,100	65,000	103%
Reload Swiss RS62	61.8	2,805	63.5	2,875	65.3	2,945	67.0	3,015	68.7	3,085	64,800	104%
Accurate 2700	59.1	2,810	60.8	2,880	62.4	2,945	64.0	3,010	65.7	3,075	65,000	98%
Reload Swiss RS70	63.3	2,790	65.0	2,860	66.8	2,930	68.5	3,000	70.3	3,075	64,800	103%
Norma URP	58.7	2,790	60.3	2,860	62.0	2,930	63.6	2,995	65.2	3,060	64,900	104%
IMR 4955	61.8	2,760	63.5	2,830	65.3	2,900	67.0	2,970	68.7	3,040	65,000	101%
Ramshot Big Game	57.9	2,785	59.5	2,850	61.1	2,910	62.7	2,975	64.3	3,040	64,800	95%
Ramshot Hunter	60.8	2,770	62.5	2,840	64.2	2,905	65.9	2,975	67.6	3,040	64,800	105%
Alliant Reloder 17	57.9	2,770	59.5	2,835	61.1	2,905	62.7	2,970	64.3	3,035	64,700	94%
Reload Swiss RS52	54.0	2,760	55.5	2,825	57.0	2,885	58.5	2,945	60.0	3,005	64,800	92%
Alliant Reloder 19	61.0	2,725	62.7	2,790	64.4	2,860	66.1	2,930	67.8	3,000	62,000	105%
Hodgdon H4350	57.8	2,740	59.4	2,800	61.0	2,865	62.6	2,930	64.2	2,995	64,900	94%
IMR 4007 SSC	57.7	2,735	59.3	2,800	60.9	2,865	62.5	2,930	64.1	2,995	64,900	100%
Winchester 748	54.2	2,750	55.7	2,810	57.2	2,870	58.7	2,930	60.2	2,990	64,800	90%
Vihtavuori N160	59.6	2,710	61.3	2,775	62.9	2,840	64.5	2,900	66.2	2,965	64,800	105%
Hodgdon H380	55.9	2,720	57.5	2,780	59.0	2,840	60.5	2,900	62.1	2,960	64,900	96%
Shooters World SW4350	59.6	2,695	61.3	2,760	62.9	2,820	64.5	2,885	66.2	2,950	64,700	105%
Vihtavuori N550	54.8	2,705	56.3	2,765	57.8	2,820	59.4	2,880	60.9	2,940	64,900	93%

200 gr Bullet · 25" barrel

COAL: 2.790" • Bullet length: 1.487" • Seat depth: 0.797" • Usable capacity: 65.7 / 79.6 gr H_2O

Powder	STEP 1 · 90%		STEP 2		STEP 3		STEP 4		STEP 5 · LIMIT			
	gr	fps	gr	fps	gr	fps	gr	fps	gr	fps	psi	Fill
Hodgdon SUPERFORMANCE	60.6	2,715	62.3	2,780	64.0	2,845	65.6	2,910	67.3	2,980	64,900	100%
Winchester StaBALL 6.5	58.6	2,700	60.2	2,760	61.8	2,825	63.5	2,890	65.1	2,955	64,800	100%
Accurate 4350	57.7	2,665	59.3	2,730	60.9	2,790	62.5	2,855	64.1	2,920	65,000	102%
Reload Swiss RS62	58.9	2,660	60.5	2,725	62.2	2,790	63.8	2,855	65.4	2,920	64,900	103%
Reload Swiss RS70	60.2	2,645	61.9	2,710	63.6	2,780	65.2	2,840	66.9	2,910	64,900	103%
Norma URP	55.6	2,640	57.1	2,700	58.7	2,765	60.3	2,830	61.8	2,895	64,900	103%
Accurate 2700	56.1	2,645	57.6	2,700	59.2	2,765	60.8	2,830	62.3	2,890	65,000	97%
Alliant Reloder 19	58.5	2,605	60.1	2,670	61.8	2,735	63.4	2,800	65.0	2,865	63,400	105%
Hodgdon Hybrid 100V	55.4	2,615	56.9	2,675	58.5	2,740	60.0	2,805	61.5	2,865	61,800	105%
Hodgdon H4831SC	59.8	2,600	61.5	2,665	63.1	2,725	64.8	2,790	66.4	2,855	64,700	102%
IMR 7828	60.7	2,595	62.4	2,655	64.1	2,725	65.7	2,785	67.4	2,850	64,800	103%
Norma MRP	59.7	2,595	61.4	2,660	63.0	2,720	64.7	2,785	66.3	2,850	62,500	105%
IMR 4007 SSC	54.7	2,575	56.2	2,635	57.8	2,700	59.3	2,760	60.8	2,820	64,900	99%
Hodgdon H4350	54.5	2,575	56.0	2,630	57.5	2,690	59.1	2,755	60.6	2,815	64,900	93%
Vihtavuori N560	59.4	2,570	61.0	2,630	62.7	2,690	64.3	2,750	66.0	2,810	63,600	105%
Hodgdon H414	54.3	2,570	55.8	2,630	57.3	2,685	58.8	2,745	60.3	2,805	65,000	93%
Norma 204	55.6	2,560	57.1	2,620	58.7	2,680	60.3	2,745	61.8	2,805	64,900	99%
Winchester 760	54.4	2,560	55.9	2,620	57.4	2,675	58.9	2,735	60.4	2,795	64,900	94%
Vihtavuori N160	56.3	2,545	57.9	2,605	59.5	2,665	61.0	2,725	62.6	2,785	64,900	103%
Vihtavuori N550	51.4	2,520	52.8	2,570	54.3	2,630	55.7	2,680	57.1	2,735	64,800	91%

210 gr Bullet · 25" barrel

COAL: 2.840" • Bullet length: 1.469" • Seat depth: 0.729" • Usable capacity: 66.5 / 79.6 gr H_2O

Powder	STEP 1 · 90%		STEP 2		STEP 3		STEP 4		STEP 5 · LIMIT			
	gr	fps	gr	fps	gr	fps	gr	fps	gr	fps	psi	Fill
Hodgdon SUPERFORMANCE	60.2	2,655	61.9	2,720	63.6	2,785	65.2	2,850	66.9	2,915	64,900	99%
Alliant Reloder 26	62.5	2,635	64.2	2,700	66.0	2,770	67.7	2,835	69.4	2,900	62,300	105%
Winchester StaBALL 6.5	58.1	2,630	59.7	2,690	61.3	2,750	62.9	2,810	64.5	2,875	64,900	98%
Reload Swiss RS62	58.6	2,610	60.2	2,670	61.8	2,735	63.5	2,800	65.1	2,865	64,900	102%
Reload Swiss RS70	59.9	2,595	61.6	2,660	63.3	2,725	64.9	2,785	66.6	2,855	64,900	101%
Accurate 4350	57.2	2,600	58.8	2,665	60.4	2,725	62.0	2,785	63.6	2,850	64,900	100%
Hodgdon Hybrid 100V	56.0	2,595	57.5	2,655	59.1	2,720	60.7	2,785	62.2	2,845	64,200	105%
Winchester Supreme 780	62.1	2,585	63.8	2,645	65.5	2,710	67.3	2,780	69.0	2,845	65,000	104%
Alliant Reloder 19	58.8	2,580	60.4	2,640	62.0	2,705	63.7	2,770	65.3	2,835	64,900	104%
Norma URP	55.2	2,590	56.7	2,645	58.3	2,710	59.8	2,770	61.3	2,830	64,900	101%
Accurate 2700	55.6	2,575	57.1	2,635	58.7	2,695	60.3	2,755	61.8	2,815	64,900	95%
Alliant Power Pro 4000-MR	58.0	2,560	59.6	2,620	61.2	2,680	62.8	2,740	64.4	2,805	65,000	99%
Alliant Reloder 17	54.7	2,560	56.2	2,620	57.8	2,680	59.3	2,740	60.8	2,800	64,700	92%
Hodgdon H4831SC	59.5	2,550	61.1	2,610	62.8	2,670	64.4	2,735	66.1	2,800	64,800	100%
IMR 4350	55.4	2,550	57.0	2,610	58.5	2,670	60.0	2,725	61.6	2,785	64,900	99%
Alliant Reloder 23	57.9	2,540	59.5	2,600	61.1	2,660	62.7	2,720	64.3	2,780	65,000	105%
IMR 4007 SSC	54.4	2,520	55.9	2,580	57.4	2,635	58.9	2,695	60.4	2,755	64,800	97%
Vihtavuori N560	59.0	2,520	60.6	2,575	62.3	2,635	63.9	2,695	65.5	2,750	64,900	103%
Alliant Reloder 16	53.7	2,520	55.2	2,575	56.7	2,635	58.2	2,690	59.7	2,745	65,000	100%
Hodgdon H4350	54.0	2,515	55.5	2,570	57.0	2,630	58.5	2,685	60.0	2,745	64,900	91%

220 gr Bullet · 25" barrel

COAL: 2.810" • Bullet length: 1.550" • Seat depth: 0.841" • Usable capacity: 64.6 / 79.6 gr H_2O

Powder	STEP 1 · 90%		STEP 2		STEP 3		STEP 4		STEP 5 · LIMIT			
	gr	fps	gr	fps	gr	fps	gr	fps	gr	fps	psi	Fill
Hodgdon SUPERFORMANCE	58.4	2,580	60.0	2,640	61.7	2,705	63.3	2,765	64.9	2,830	64,700	98%
Alliant Reloder 26	60.8	2,570	62.5	2,630	64.2	2,695	65.8	2,760	67.5	2,825	62,500	105%
Winchester StaBALL 6.5	56.3	2,545	57.9	2,605	59.5	2,665	61.0	2,725	62.6	2,785	65,000	98%
Reload Swiss RS62	56.9	2,535	58.5	2,595	60.0	2,655	61.6	2,720	63.2	2,780	64,800	102%
Reload Swiss RS70	58.1	2,520	59.7	2,580	61.3	2,640	63.0	2,710	64.6	2,770	64,800	101%
Accurate 4350	55.5	2,525	57.0	2,580	58.6	2,645	60.2	2,705	61.7	2,765	64,800	100%
Winchester Supreme 780	60.2	2,510	61.9	2,575	63.6	2,640	65.2	2,700	66.9	2,765	64,700	104%
Hodgdon Hybrid 100V	54.4	2,520	55.9	2,580	57.4	2,640	58.9	2,700	60.4	2,760	64,200	105%
Alliant Reloder 19	57.1	2,510	58.7	2,570	60.3	2,635	61.8	2,690	63.4	2,755	64,800	104%
Norma URP	53.5	2,515	55.0	2,570	56.5	2,630	57.9	2,685	59.4	2,745	64,800	101%
IMR 7828SSC	58.6	2,490	60.2	2,550	61.8	2,610	63.5	2,675	65.1	2,735	64,100	105%
Hodgdon H4831SC	57.8	2,480	59.4	2,535	61.0	2,595	62.6	2,660	64.2	2,720	64,800	100%
Alliant Reloder 17	53.1	2,485	54.6	2,545	56.0	2,600	57.5	2,655	59.0	2,715	64,700	92%
Reload Swiss RS60	52.9	2,480	54.4	2,535	55.8	2,590	57.3	2,650	58.8	2,710	64,900	94%
Alliant Reloder 22	56.7	2,460	58.3	2,520	59.9	2,580	61.4	2,640	63.0	2,700	64,800	104%
IMR 4350	53.7	2,475	55.2	2,530	56.7	2,585	58.2	2,645	59.7	2,700	64,900	99%
Vihtavuori N560	57.1	2,440	58.7	2,500	60.3	2,555	61.8	2,610	63.4	2,665	64,800	103%
Hodgdon H4350	52.3	2,435	53.8	2,495	55.2	2,550	56.6	2,600	58.1	2,660	64,900	91%
Norma 204	53.7	2,430	55.2	2,490	56.7	2,545	58.2	2,605	59.7	2,660	64,900	97%
Vihtavuori N160	54.1	2,410	55.6	2,465	57.1	2,520	58.6	2,575	60.1	2,630	65,000	101%

230 gr Bullet · 25" barrel

COAL: 2.860" • Bullet length: 1.681" • Seat depth: 0.921" • Usable capacity: 63.6 / 79.6 gr H_2O

Powder	STEP 1 · 90%		STEP 2		STEP 3		STEP 4		STEP 5 · LIMIT			
	gr	fps	gr	fps	gr	fps	gr	fps	gr	fps	psi	Fill
Alliant Reloder 26	59.8	2,520	61.5	2,580	63.1	2,640	64.8	2,705	66.4	2,770	63,300	105%
Hodgdon SUPERFORMANCE	57.2	2,515	58.8	2,575	60.4	2,635	62.0	2,695	63.6	2,760	64,800	98%
Reload Swiss RS62	55.8	2,480	57.3	2,535	58.9	2,595	60.5	2,660	62.0	2,715	65,000	101%
Winchester StaBALL 6.5	55.1	2,480	56.6	2,535	58.2	2,595	59.7	2,650	61.2	2,710	65,000	97%
Hodgdon Hybrid 100V	53.6	2,470	55.1	2,530	56.5	2,585	58.0	2,645	59.5	2,705	65,000	105%
Reload Swiss RS70	57.0	2,465	58.6	2,525	60.1	2,580	61.7	2,640	63.3	2,705	64,800	100%
Winchester Supreme 780	59.0	2,455	60.6	2,515	62.3	2,580	63.9	2,640	65.6	2,705	64,900	104%
Alliant Reloder 19	56.0	2,455	57.5	2,510	59.1	2,575	60.7	2,635	62.2	2,695	65,000	104%
IMR 4831	54.9	2,445	56.4	2,500	58.0	2,560	59.5	2,620	61.0	2,680	64,900	103%
IMR 7828SSC	57.5	2,440	59.1	2,495	60.7	2,555	62.3	2,615	63.9	2,680	64,800	104%
Norma MRP	57.2	2,440	58.8	2,500	60.4	2,560	61.9	2,615	63.5	2,675	64,900	104%
Alliant Power Pro 4000-MR	55.1	2,420	56.6	2,480	58.2	2,540	59.7	2,595	61.2	2,655	64,900	98%
Hodgdon H4831SC	56.6	2,420	58.2	2,475	59.8	2,535	61.3	2,595	62.9	2,655	64,800	100%
IMR 7828	57.1	2,415	58.7	2,470	60.3	2,530	61.8	2,585	63.4	2,645	64,800	100%
Alliant Reloder 22	55.5	2,400	57.0	2,460	58.6	2,520	60.2	2,580	61.7	2,635	64,800	103%
Alliant Reloder 23	55.0	2,405	56.5	2,460	58.0	2,515	59.6	2,575	61.1	2,630	64,900	104%
Hodgdon H4831	56.0	2,390	57.5	2,445	59.1	2,505	60.7	2,565	62.2	2,625	65,000	105%
Vihtavuori N555	51.8	2,395	53.3	2,450	54.7	2,505	56.1	2,555	57.6	2,615	65,000	97%
Vihtavuori N560	55.7	2,375	57.3	2,430	58.8	2,485	60.4	2,540	61.9	2,595	65,000	102%
Hodgdon H4350	51.0	2,370	52.4	2,425	53.9	2,480	55.3	2,530	56.7	2,585	64,700	90%

.308 Marlin Express

Marlin Firearms and Hornady jointly developed the .308 Marlin Express in 2007. Their aim was to give lever-action rifles with tubular magazines performance approaching that of the .308 Winchester. The semi-rimmed bottlenecked case is based on the .307 Winchester. The cartridge was designed around Hornady's LEVERevolution ammunition. Its flexible elastomer-tipped bullets can be used safely in tubular magazines. Marlin chambered the cartridge in the Model 308MX and 308MXLR rifles. It is standardized by SAAMI.

Hornady's factory load drives a 160-grain FTX bullet at about 2,660 fps. This is a substantial improvement over the .30-30 Winchester in both trajectory and retained energy. The cartridge is used mainly for deer-sized game at moderate ranges. Ammunition has come chiefly from Hornady. Remington also catalogs a 150-grain load. The .338 Marlin Express followed as a larger-bore companion on a similar design.

Cartridge specifications	
Bullet Diameter	**0.308" (7.82 mm)**
Max Case Length	**1.920" (48.77 mm)**
Case Trim Length	**1.910" (48.52 mm)**
Max COAL	**2.600" (66.04 mm)**
Primer Pocket	**Large Rifle**
Standard Twist	**1:12"**
Case Capacity	**51.7 gr H_2O**
Max Pressure	**47,500 psi (SAAMI)**

125 gr Bullet · 25" barrel

COAL: 2.300" • Bullet length: 0.777" • Seat depth: 0.397" • Usable capacity: 44.5 / 51.7 gr H_2O

Powder	STEP 1 · 90%		STEP 2		STEP 3		STEP 4		STEP 5 · LIMIT			
	gr	fps	gr	fps	gr	fps	gr	fps	gr	fps	psi	Fill
Hodgdon Leverevolution	41.4	2,715	42.5	2,775	43.7	2,845	44.9	2,915	46.0	2,975	47,500	99%
Hodgdon CFE BLK	34.0	2,655	35.0	2,715	35.9	2,770	36.8	2,825	37.8	2,885	47,400	87%
Vihtavuori N530	36.9	2,645	37.9	2,700	39.0	2,765	40.0	2,820	41.0	2,880	47,300	99%
Alliant AR-Comp	37.1	2,640	38.1	2,695	39.2	2,760	40.2	2,815	41.2	2,875	47,400	99%
Hodgdon BL-C(2)	41.2	2,610	42.4	2,680	43.5	2,740	44.6	2,805	45.8	2,875	47,400	103%
Vihtavuori N135	38.3	2,640	39.3	2,695	40.4	2,755	41.5	2,820	42.5	2,875	47,300	104%
Accurate 2520	39.3	2,625	40.4	2,685	41.5	2,750	42.6	2,810	43.7	2,870	47,300	101%
Norma 202	38.7	2,615	39.8	2,675	40.9	2,740	41.9	2,795	43.0	2,855	47,200	105%
Vihtavuori N140	40.0	2,600	41.1	2,660	42.2	2,720	43.3	2,785	44.4	2,845	47,500	102%
Winchester 748	40.8	2,585	41.9	2,645	43.0	2,710	44.2	2,775	45.3	2,840	47,400	105%
IMR 4895	39.1	2,590	40.2	2,655	41.3	2,715	42.3	2,775	43.4	2,835	47,500	101%
Ramshot TAC	37.6	2,590	38.6	2,645	39.7	2,710	40.8	2,770	41.8	2,830	47,400	100%
Hodgdon H335	37.8	2,585	38.8	2,640	39.9	2,705	41.0	2,765	42.0	2,825	47,400	93%
Hodgdon H4895	37.7	2,580	38.8	2,640	39.8	2,700	40.9	2,760	41.9	2,820	47,500	98%
Accurate 2460	37.4	2,580	38.5	2,640	39.5	2,695	40.5	2,750	41.6	2,815	47,300	94%
IMR 4064	39.2	2,560	40.3	2,620	41.4	2,680	42.5	2,740	43.6	2,805	47,500	105%
Alliant Power Pro Varmint	37.9	2,550	39.0	2,615	40.0	2,670	41.0	2,725	42.1	2,790	47,400	100%
Hodgdon Varget	38.7	2,535	39.8	2,600	40.9	2,660	41.9	2,720	43.0	2,785	47,200	100%
IMR 8208 XBR	36.8	2,550	37.8	2,605	38.8	2,665	39.9	2,725	40.9	2,785	47,400	100%
Reload Swiss RS50	40.0	2,535	41.1	2,595	42.2	2,655	43.3	2,720	44.4	2,780	47,400	105%

140 gr Bullet · 25" barrel

COAL: 2.583" • Bullet length: 1.186" • Seat depth: 0.523" • Usable capacity: 41.9 / 51.7 gr H_2O

Powder	STEP 1 · 90%		STEP 2		STEP 3		STEP 4		STEP 5 · LIMIT			
	gr	fps	gr	fps	gr	fps	gr	fps	gr	fps	psi	Fill
Hodgdon Leverevolution	38.8	2,525	39.9	2,585	41.0	2,650	42.0	2,705	43.1	2,770	47,300	98%
Hodgdon BL-C(2)	38.7	2,435	39.8	2,495	40.9	2,560	41.9	2,615	43.0	2,680	47,300	103%
Vihtavuori N530	34.2	2,445	35.2	2,500	36.1	2,555	37.0	2,605	38.0	2,665	47,300	97%
Accurate 2520	36.8	2,430	37.8	2,485	38.8	2,545	39.9	2,605	40.9	2,660	47,200	101%
Hodgdon CFE BLK	31.8	2,440	32.7	2,495	33.5	2,545	34.4	2,600	35.3	2,655	47,400	87%
Vihtavuori N135	35.6	2,435	36.6	2,490	37.6	2,545	38.6	2,600	39.6	2,655	47,400	103%
Winchester 748	38.3	2,415	39.3	2,470	40.4	2,530	41.5	2,595	42.5	2,650	47,400	104%
Vihtavuori N140	37.4	2,415	38.4	2,475	39.5	2,535	40.5	2,590	41.5	2,645	47,400	101%
IMR 4895	36.5	2,405	37.5	2,465	38.5	2,520	39.5	2,575	40.5	2,635	47,300	100%
Ramshot TAC	35.2	2,395	36.2	2,450	37.2	2,510	38.1	2,560	39.1	2,615	47,200	99%
Hodgdon H4895	35.2	2,390	36.2	2,445	37.2	2,505	38.1	2,555	39.1	2,610	47,300	97%
Hodgdon Varget	36.3	2,370	37.3	2,425	38.3	2,485	39.3	2,540	40.3	2,600	47,400	100%
IMR 4064	36.5	2,380	37.5	2,435	38.5	2,490	39.5	2,545	40.5	2,600	47,300	103%
Alliant Power Pro Varmint	35.5	2,365	36.5	2,420	37.5	2,480	38.4	2,530	39.4	2,585	47,400	99%
Reload Swiss RS50	37.4	2,350	38.5	2,410	39.5	2,465	40.5	2,520	41.6	2,580	47,200	104%
IMR 8208 XBR	34.2	2,355	35.2	2,410	36.1	2,460	37.0	2,515	38.0	2,570	47,300	98%
Shooters World The Creed	36.6	2,335	37.6	2,395	38.7	2,455	39.7	2,510	40.7	2,570	47,500	101%
Norma 203B	35.6	2,335	36.6	2,390	37.6	2,450	38.6	2,505	39.6	2,565	47,500	103%
IMR 3031	33.3	2,340	34.2	2,395	35.1	2,445	36.1	2,505	37.0	2,560	47,200	94%
Accurate 2230	33.7	2,340	34.6	2,395	35.5	2,440	36.5	2,500	37.4	2,550	47,500	90%

150 gr Bullet · 25" barrel

COAL: 2.350" • Bullet length: 0.905" • Seat depth: 0.475" • Usable capacity: 43.8 / 51.7 gr H_2O

Powder	STEP 1 · 90%		STEP 2		STEP 3		STEP 4		STEP 5 · LIMIT			
	gr	fps	gr	fps	gr	fps	gr	fps	gr	fps	psi	Fill
Hodgdon Leverevolution	39.3	2,510	40.4	2,570	41.5	2,630	42.6	2,690	43.7	2,750	47,300	95%
Hodgdon CFE 223	40.2	2,465	41.3	2,520	42.5	2,585	43.6	2,640	44.7	2,700	47,300	104%
Vihtavuori N540	39.0	2,475	40.1	2,535	41.1	2,585	42.2	2,645	43.3	2,700	47,400	105%
Hodgdon BL-C(2)	39.4	2,440	40.5	2,500	41.6	2,560	42.7	2,620	43.8	2,680	47,300	100%
Alliant Reloder 15	38.6	2,435	39.7	2,490	40.8	2,550	41.8	2,600	42.9	2,660	47,400	105%
Winchester 748	38.9	2,415	40.0	2,475	41.0	2,530	42.1	2,585	43.2	2,645	47,400	101%
Accurate 2520	37.2	2,415	38.2	2,465	39.3	2,525	40.3	2,575	41.3	2,630	47,300	97%
IMR 4895	36.8	2,395	37.8	2,445	38.8	2,500	39.9	2,560	40.9	2,610	47,500	96%
Ramshot Big Game	40.6	2,375	41.7	2,430	42.9	2,490	44.0	2,545	45.1	2,605	46,700	105%
Ramshot TAC	35.7	2,380	36.7	2,435	37.7	2,490	38.7	2,545	39.7	2,595	47,400	96%
Hodgdon H335	35.8	2,375	36.8	2,430	37.8	2,480	38.8	2,535	39.8	2,590	47,300	90%
Hodgdon H4895	35.6	2,375	36.6	2,430	37.5	2,480	38.5	2,535	39.5	2,590	47,300	93%
Hodgdon Varget	36.7	2,365	37.7	2,420	38.8	2,480	39.8	2,535	40.8	2,590	47,300	97%
Accurate 4064	37.3	2,360	38.3	2,410	39.3	2,465	40.4	2,525	41.4	2,580	47,200	105%
Alliant Power Pro 2000-MR	39.3	2,350	40.4	2,410	41.5	2,465	42.6	2,525	43.7	2,580	46,300	105%
IMR 4064	36.7	2,365	37.7	2,415	38.8	2,475	39.8	2,530	40.8	2,580	47,500	100%
Reload Swiss RS50	38.1	2,355	39.1	2,405	40.2	2,465	41.3	2,520	42.3	2,575	47,400	101%
Alliant Power Pro Varmint	35.9	2,350	36.9	2,405	37.9	2,460	38.9	2,515	39.9	2,565	47,400	96%
IMR 8208 XBR	34.5	2,335	35.5	2,390	36.4	2,440	37.3	2,490	38.3	2,545	47,500	95%
Hodgdon H414	40.4	2,300	41.5	2,355	42.6	2,415	43.8	2,475	44.9	2,535	47,400	104%

160 gr Bullet · 25" barrel

COAL: 2.590" • Bullet length: 1.159" • Seat depth: 0.489" • Usable capacity: 42.5 / 51.7 gr H_2O

Powder	STEP 1 · 90%		STEP 2		STEP 3		STEP 4		STEP 5 · LIMIT			
	gr	fps	gr	fps	gr	fps	gr	fps	gr	fps	psi	Fill
Hodgdon Leverevolution	38.0	2,410	39.0	2,465	40.1	2,525	41.2	2,585	42.2	2,635	47,300	95%
Hodgdon CFE 223	38.9	2,370	40.0	2,425	41.0	2,480	42.1	2,535	43.2	2,595	47,300	104%
Vihtavuori N540	37.4	2,365	38.5	2,420	39.5	2,470	40.5	2,525	41.6	2,580	47,400	104%
Hodgdon BL-C(2)	38.2	2,350	39.3	2,410	40.3	2,465	41.4	2,525	42.4	2,575	47,500	100%
Alliant Reloder 15	37.1	2,330	38.1	2,385	39.2	2,440	40.2	2,495	41.2	2,545	47,300	103%
Winchester 748	37.5	2,320	38.5	2,370	39.6	2,430	40.7	2,490	41.7	2,540	47,200	101%
Reload Swiss RS52	36.8	2,300	37.8	2,350	38.8	2,405	39.9	2,465	40.9	2,520	47,400	101%
Accurate 2520	35.8	2,305	36.8	2,355	37.8	2,410	38.8	2,460	39.8	2,515	47,200	96%
Ramshot Big Game	39.4	2,290	40.5	2,350	41.6	2,405	42.7	2,460	43.8	2,515	47,200	105%
Vihtavuori N140	36.4	2,305	37.4	2,360	38.4	2,410	39.4	2,465	40.4	2,515	47,500	97%
IMR 4895	35.5	2,295	36.5	2,350	37.5	2,400	38.4	2,450	39.4	2,505	47,500	96%
Vihtavuori N530	32.7	2,300	33.6	2,350	34.5	2,400	35.4	2,445	36.3	2,495	47,400	92%
Hodgdon Varget	35.5	2,275	36.5	2,330	37.5	2,385	38.4	2,435	39.4	2,485	47,400	96%
Norma 202	34.8	2,280	35.8	2,330	36.8	2,385	37.7	2,430	38.7	2,485	47,300	99%
Ramshot TAC	34.5	2,280	35.5	2,335	36.4	2,385	37.3	2,430	38.3	2,485	47,300	96%
Hodgdon H4895	34.3	2,275	35.3	2,330	36.2	2,380	37.1	2,425	38.1	2,480	47,400	93%
IMR 4064	35.3	2,265	36.3	2,320	37.3	2,370	38.2	2,420	39.2	2,470	47,400	99%
Reload Swiss RS50	36.8	2,255	37.8	2,310	38.8	2,360	39.9	2,420	40.9	2,470	47,400	101%
Accurate 2700	38.9	2,240	40.0	2,295	41.0	2,350	42.1	2,405	43.2	2,465	47,400	104%
IMR 8208 XBR	33.1	2,230	34.0	2,280	35.0	2,335	35.9	2,380	36.8	2,430	47,400	94%

170 gr Bullet · 25" barrel

COAL: 2.380" • Bullet length: 0.996" • Seat depth: 0.536" • Usable capacity: 42.4 / 51.7 gr H_2O

Powder	STEP 1 · 90%		STEP 2		STEP 3		STEP 4		STEP 5 · LIMIT			
	gr	fps	gr	fps	gr	fps	gr	fps	gr	fps	psi	Fill
Hodgdon Leverevolution	37.4	2,345	38.4	2,395	39.5	2,455	40.5	2,505	41.5	2,560	47,300	93%
Hodgdon CFE 223	38.3	2,305	39.4	2,360	40.5	2,415	41.5	2,465	42.6	2,525	47,500	102%
Hodgdon BL-C(2)	37.6	2,285	38.6	2,340	39.7	2,395	40.8	2,455	41.8	2,510	47,500	99%
Vihtavuori N540	36.5	2,280	37.5	2,330	38.5	2,380	39.5	2,430	40.5	2,485	47,300	101%
Winchester 748	37.0	2,260	38.0	2,315	39.0	2,365	40.1	2,425	41.1	2,475	47,400	100%
Alliant Reloder 15	36.3	2,260	37.3	2,310	38.3	2,360	39.3	2,415	40.3	2,465	47,500	101%
Ramshot Big Game	38.9	2,240	40.0	2,295	41.0	2,345	42.1	2,400	43.2	2,455	47,400	104%
Alliant Power Pro 2000-MR	37.8	2,225	38.8	2,275	39.9	2,335	41.0	2,390	42.0	2,440	47,400	104%
Vihtavuori N140	35.6	2,230	36.6	2,280	37.5	2,330	38.5	2,380	39.5	2,435	47,300	95%
Accurate 2520	35.1	2,230	36.1	2,280	37.0	2,325	38.0	2,375	39.0	2,430	47,200	95%
Hodgdon Varget	34.8	2,210	35.8	2,260	36.8	2,315	37.7	2,360	38.7	2,415	47,400	95%
Hodgdon H380	37.7	2,195	38.8	2,250	39.8	2,300	40.9	2,360	41.9	2,410	46,300	105%
Ramshot TAC	33.9	2,210	34.9	2,260	35.8	2,310	36.8	2,360	37.7	2,410	47,500	95%
Hodgdon H4895	33.6	2,200	34.5	2,250	35.5	2,300	36.4	2,350	37.3	2,395	47,200	91%
Norma 202	34.0	2,200	35.0	2,250	35.9	2,295	36.8	2,345	37.8	2,395	47,300	97%
Hodgdon H414	38.5	2,170	39.6	2,225	40.6	2,275	41.7	2,330	42.8	2,390	47,400	103%
IMR 4064	34.5	2,195	35.5	2,245	36.4	2,290	37.3	2,340	38.3	2,390	47,300	97%
Winchester 760	38.7	2,170	39.8	2,225	40.9	2,280	41.9	2,330	43.0	2,385	47,400	104%
Reload Swiss RS60	38.8	2,140	39.9	2,195	41.0	2,250	42.0	2,305	43.1	2,360	47,400	105%
IMR 8208 XBR	32.3	2,150	33.2	2,200	34.1	2,245	35.0	2,295	35.9	2,340	47,200	92%

.308 Norma Magnum

Norma of Sweden introduced the .308 Norma Magnum in 1960. Nils Kvale is credited as its designer. It is based on a shortened .300 H&H Magnum belted case. The aim was to provide .30-caliber magnum performance in a standard-length (.30-06-length) action. At first Norma sold only unprimed brass and no commercial rifles were chambered for it. Many early rifles were therefore rechambered .30-06 Springfield rifles, 1903 Springfields and Mauser 98 actions. Loaded ammunition followed about 18 months after introduction.

The .308 Norma Magnum delivers ballistics similar to the .300 Winchester Magnum. Winchester introduced that cartridge in 1963. Rifles in the Winchester cartridge were more widely available. They soon overshadowed the Norma round in North America. The .308 Norma remains in production. Hunters still use it on large game. Most rifles for it are custom builds or come from European makers.

Cartridge specifications	
Bullet Diameter	**0.308" (7.82 mm)**
Max Case Length	**2.559" (65.00 mm)**
Case Trim Length	**2.549" (64.75 mm)**
Max COAL	**3.346" (85.00 mm)**
Primer Pocket	**Large Rifle**
Standard Twist	**1:10"**
Case Capacity	**84.9 gr H_2O**
Max Pressure	**4,400 bar / 63,817 psi (C.I.P.)**

110 gr Bullet · 25" barrel

COAL: 3.046" • Bullet length: 0.795" • Seat depth: 0.308" • Usable capacity: 79.5 / 84.9 gr H_2O

Powder	STEP 1 · 90%		STEP 2		STEP 3		STEP 4		STEP 5 · LIMIT			
	gr	fps	gr	fps	gr	fps	gr	fps	gr	fps	psi	Fill
Hodgdon H4350	73.8	3,450	75.8	3,535	77.9	3,630	80.0	3,725	82.0	3,815	63,600	104%
Hodgdon Leverevolution	64.8	3,505	66.6	3,580	68.4	3,660	70.2	3,740	72.0	3,815	63,600	87%
Winchester StaBALL 6.5	71.7	3,465	73.7	3,545	75.7	3,630	77.7	3,715	79.7	3,800	63,800	101%
Vihtavuori N550	68.7	3,465	70.6	3,540	72.5	3,620	74.4	3,695	76.3	3,775	63,800	101%
Reload Swiss RS52	64.8	3,455	66.6	3,530	68.4	3,610	70.2	3,690	72.0	3,770	63,700	95%
Hodgdon BL-C(2)	65.3	3,450	67.1	3,525	68.9	3,605	70.8	3,685	72.6	3,765	63,700	92%
Hodgdon CFE 223	66.2	3,445	68.0	3,520	69.8	3,595	71.7	3,675	73.5	3,755	63,600	94%
Hodgdon H4895	61.9	3,445	63.6	3,515	65.3	3,590	67.1	3,670	68.8	3,740	63,700	90%
Alliant Reloder 15	64.4	3,430	66.2	3,505	68.0	3,580	69.7	3,650	71.5	3,730	63,800	96%
Vihtavuori N150	64.4	3,400	66.2	3,480	68.0	3,555	69.7	3,630	71.5	3,705	63,700	101%
IMR 4895	62.1	3,400	63.8	3,470	65.5	3,545	67.3	3,620	69.0	3,695	63,700	90%
IMR 4064	63.0	3,395	64.8	3,470	66.5	3,540	68.3	3,620	70.0	3,690	63,600	94%
IMR 4320	62.7	3,375	64.5	3,455	66.2	3,530	68.0	3,610	69.7	3,685	63,700	88%
Hodgdon H380	67.1	3,360	69.0	3,440	70.8	3,515	72.7	3,595	74.6	3,680	63,800	100%
Winchester 760	69.3	3,355	71.2	3,435	73.2	3,520	75.1	3,600	77.0	3,680	63,700	100%
Shooters World The Creed	63.4	3,365	65.2	3,440	66.9	3,515	68.7	3,590	70.4	3,665	63,700	92%
Alliant Power Pro 4000-MR	72.5	3,315	74.5	3,400	76.5	3,480	78.5	3,565	80.5	3,655	63,700	103%
IMR 8208 XBR	59.8	3,365	61.5	3,440	63.1	3,505	64.8	3,580	66.4	3,650	63,700	91%
Norma 202	60.8	3,365	62.5	3,440	64.2	3,510	65.8	3,575	67.5	3,650	63,600	92%
IMR 3031	58.7	3,365	60.3	3,435	62.0	3,505	63.6	3,575	65.2	3,645	63,800	88%

125 gr Bullet · 25" barrel

COAL: 3.250" • Bullet length: 1.083" • Seat depth: 0.392" • Usable capacity: 77.8 / 84.9 gr H_2O

Powder	STEP 1 · 90%		STEP 2		STEP 3		STEP 4		STEP 5 · LIMIT			
	gr	fps	gr	fps	gr	fps	gr	fps	gr	fps	psi	Fill
Hodgdon H4350	70.9	3,305	72.9	3,390	74.8	3,470	76.8	3,555	78.8	3,645	63,800	102%
Winchester StaBALL 6.5	69.0	3,285	70.9	3,360	72.8	3,440	74.8	3,520	76.7	3,600	63,600	99%
Hodgdon Leverevolution	62.1	3,295	63.8	3,370	65.5	3,440	67.3	3,515	69.0	3,590	63,700	85%
Hodgdon SUPERFORMANCE	71.9	3,240	73.9	3,325	75.9	3,405	77.9	3,490	79.9	3,580	63,700	100%
Accurate 4350	69.5	3,245	71.4	3,320	73.3	3,400	75.3	3,485	77.2	3,565	63,700	104%
Reload Swiss RS52	62.4	3,270	64.1	3,340	65.8	3,410	67.6	3,490	69.3	3,560	63,700	94%
Hodgdon BL-C(2)	62.9	3,260	64.7	3,335	66.4	3,410	68.2	3,485	69.9	3,555	63,700	90%
Alliant Power Pro 2000-MR	64.7	3,240	66.5	3,315	68.3	3,390	70.1	3,460	71.9	3,540	63,700	97%
Hodgdon CFE 223	63.5	3,245	65.3	3,320	67.0	3,390	68.8	3,460	70.5	3,535	63,600	92%
IMR 4350	68.5	3,205	70.4	3,285	72.3	3,365	74.2	3,445	76.1	3,525	62,800	105%
Alliant Reloder 15	61.3	3,220	63.0	3,290	64.7	3,360	66.4	3,430	68.1	3,500	63,700	93%
Vihtavuori N150	61.4	3,205	63.1	3,275	64.8	3,345	66.5	3,415	68.2	3,485	63,700	98%
IMR 4320	60.4	3,195	62.1	3,265	63.8	3,340	65.4	3,405	67.1	3,480	63,700	87%
Winchester StaBALL Match	61.0	3,200	62.7	3,270	64.4	3,340	66.1	3,410	67.8	3,480	63,600	98%
Hodgdon H380	64.4	3,185	66.2	3,255	68.0	3,330	69.7	3,400	71.5	3,475	63,600	98%
IMR 4064	60.1	3,195	61.8	3,265	63.5	3,335	65.1	3,400	66.8	3,470	63,700	92%
Hodgdon H4831SC	72.4	3,130	74.4	3,215	76.4	3,295	78.4	3,380	80.4	3,465	63,600	104%
Reload Swiss RS50	62.0	3,185	63.7	3,255	65.5	3,325	67.2	3,395	68.9	3,465	63,600	93%
Shooters World The Creed	60.7	3,175	62.4	3,245	64.1	3,315	65.7	3,385	67.4	3,455	63,800	90%
IMR 4831	68.5	3,095	70.4	3,175	72.3	3,260	74.2	3,340	76.1	3,425	61,000	105%

150 gr Bullet · 25" barrel

COAL: 3.120" • Bullet length: 1.141" • Seat depth: 0.580" • Usable capacity: 74.8 / 84.9 gr H_2O

Powder	STEP 1 · 90%		STEP 2		STEP 3		STEP 4		STEP 5 · LIMIT			
	gr	fps	gr	fps	gr	fps	gr	fps	gr	fps	psi	Fill
Hodgdon H4350	66.2	3,065	68.0	3,135	69.9	3,215	71.8	3,290	73.6	3,365	63,700	99%
Hodgdon SUPERFORMANCE	67.9	3,030	69.8	3,105	71.7	3,180	73.5	3,250	75.4	3,330	63,800	99%
Winchester StaBALL 6.5	64.8	3,020	66.6	3,090	68.4	3,160	70.2	3,230	72.0	3,305	63,600	97%
Accurate 4350	65.3	3,010	67.1	3,080	68.9	3,150	70.8	3,230	72.6	3,300	63,700	101%
Vihtavuori N555	65.9	2,995	67.7	3,065	69.6	3,140	71.4	3,215	73.2	3,285	61,600	105%
Norma URP	64.1	2,985	65.9	3,060	67.7	3,135	69.4	3,205	71.2	3,280	63,800	104%
Reload Swiss RS62	66.5	2,975	68.3	3,050	70.2	3,125	72.1	3,205	73.9	3,280	63,700	103%
IMR 4350	64.4	2,985	66.2	3,055	68.0	3,130	69.7	3,195	71.5	3,270	63,600	103%
Alliant Reloder 16	62.7	2,985	64.5	3,050	66.2	3,120	68.0	3,190	69.7	3,255	63,600	103%
IMR 4831	65.8	2,950	67.6	3,020	69.4	3,095	71.3	3,175	73.1	3,250	63,700	105%
Alliant Power Pro 4000-MR	66.1	2,950	67.9	3,020	69.8	3,095	71.6	3,170	73.4	3,240	63,700	100%
Hodgdon H4831SC	68.4	2,935	70.3	3,010	72.2	3,085	74.1	3,160	76.0	3,240	63,800	102%
Winchester 760	62.7	2,950	64.5	3,020	66.2	3,085	68.0	3,160	69.7	3,225	63,700	96%
Alliant Reloder 19	66.6	2,915	68.4	2,985	70.3	3,065	72.2	3,140	74.0	3,215	61,900	105%
Vihtavuori N160	65.2	2,930	67.0	3,000	68.8	3,070	70.6	3,140	72.4	3,210	62,700	105%
Vihtavuori N550	60.0	2,945	61.7	3,010	63.4	3,075	65.0	3,135	66.7	3,200	63,700	94%
Hodgdon H414	60.8	2,890	62.5	2,955	64.2	3,025	65.9	3,090	67.6	3,160	63,800	92%
Winchester StaBALL Match	57.1	2,910	58.7	2,975	60.3	3,040	61.8	3,100	63.4	3,160	63,600	95%
IMR 4064	55.7	2,905	57.3	2,970	58.8	3,030	60.4	3,090	61.9	3,150	63,600	88%
Reload Swiss RS50	58.0	2,900	59.6	2,960	61.2	3,025	62.8	3,085	64.4	3,150	63,600	90%

165 gr Bullet · 25" barrel

COAL: 3.250" • Bullet length: 1.274" • Seat depth: 0.583" • Usable capacity: 74.5 / 84.9 gr H_2O

Powder	STEP 1 · 90%		STEP 2		STEP 3		STEP 4		STEP 5 · LIMIT			
	gr	fps	gr	fps	gr	fps	gr	fps	gr	fps	psi	Fill
Hodgdon H4350	64.4	2,940	66.2	3,010	68.0	3,080	69.7	3,150	71.5	3,220	63,700	97%
Alliant Reloder 26	70.0	2,910	72.0	2,985	73.9	3,055	75.8	3,130	77.8	3,210	62,200	105%
Hodgdon SUPERFORMANCE	66.2	2,910	68.0	2,980	69.9	3,055	71.8	3,125	73.6	3,200	63,600	97%
Vihtavuori N555	64.4	2,905	66.2	2,970	68.0	3,040	69.8	3,110	71.6	3,180	63,600	103%
Accurate 4350	63.7	2,890	65.5	2,960	67.3	3,030	69.0	3,095	70.8	3,165	63,700	99%
Norma URP	62.5	2,880	64.2	2,950	66.0	3,020	67.7	3,090	69.4	3,160	63,800	102%
Reload Swiss RS62	65.1	2,875	66.9	2,945	68.7	3,015	70.5	3,085	72.3	3,160	63,600	101%
Reload Swiss RS70	66.8	2,865	68.7	2,935	70.5	3,005	72.3	3,075	74.2	3,150	63,700	100%
Alliant Reloder 19	65.9	2,850	67.7	2,920	69.6	2,995	71.4	3,065	73.2	3,135	63,700	104%
IMR 4831	64.4	2,850	66.2	2,920	68.0	2,990	69.8	3,065	71.6	3,135	63,700	103%
Norma 204	63.5	2,865	65.3	2,930	67.0	2,995	68.8	3,070	70.5	3,135	63,700	99%
IMR 4350	62.5	2,855	64.2	2,920	66.0	2,990	67.7	3,055	69.4	3,125	63,600	100%
Winchester Supreme 780	69.2	2,825	71.1	2,895	73.1	2,970	75.0	3,045	76.9	3,120	63,800	104%
Alliant Power Pro 4000-MR	64.6	2,840	66.4	2,905	68.2	2,975	70.0	3,045	71.8	3,115	63,800	98%
Alliant Reloder 22	66.2	2,825	68.0	2,895	69.9	2,965	71.8	3,040	73.6	3,110	60,600	105%
Alliant Reloder 16	60.8	2,845	62.5	2,910	64.2	2,975	65.8	3,035	67.5	3,100	63,700	100%
IMR 7828	68.0	2,810	69.9	2,880	71.8	2,950	73.7	3,025	75.6	3,100	63,800	102%
Vihtavuori N160	63.6	2,815	65.4	2,880	67.2	2,950	68.9	3,010	70.7	3,080	63,700	103%
Hodgdon H380	58.1	2,770	59.7	2,830	61.3	2,890	62.9	2,950	64.5	3,010	63,600	92%
IMR 4064	53.9	2,755	55.4	2,815	56.9	2,875	58.4	2,930	59.9	2,990	63,700	86%

180 gr Bullet · 25" barrel

COAL: 3.250" • Bullet length: 1.319" • Seat depth: 0.628" • Usable capacity: 73.7 / 84.9 gr H_2O

Powder	STEP 1 · 90%		STEP 2		STEP 3		STEP 4		STEP 5 · LIMIT			
	gr	fps	gr	fps	gr	fps	gr	fps	gr	fps	psi	Fill
Alliant Reloder 26	68.8	2,830	70.7	2,900	72.6	2,975	74.5	3,045	76.4	3,120	63,600	104%
Hodgdon H4350	62.3	2,815	64.0	2,880	65.8	2,950	67.5	3,015	69.2	3,080	63,600	95%
Hodgdon SUPERFORMANCE	64.4	2,800	66.2	2,865	68.0	2,935	69.8	3,000	71.6	3,070	63,600	95%
Reload Swiss RS62	63.5	2,775	65.3	2,840	67.0	2,905	68.8	2,975	70.5	3,045	63,700	100%
Alliant Reloder 22	65.5	2,765	67.3	2,830	69.2	2,905	71.0	2,970	72.8	3,040	63,200	105%
Vihtavuori N555	62.0	2,780	63.7	2,840	65.5	2,910	67.2	2,975	68.9	3,040	63,700	100%
Accurate 4350	61.9	2,775	63.6	2,835	65.3	2,900	67.1	2,970	68.8	3,035	63,800	98%
Norma URP	60.6	2,770	62.3	2,840	64.0	2,905	65.6	2,965	67.3	3,035	63,600	100%
Reload Swiss RS70	65.1	2,760	66.9	2,830	68.7	2,895	70.5	2,965	72.3	3,035	63,700	99%
Alliant Reloder 19	64.3	2,755	66.1	2,825	67.8	2,890	69.6	2,960	71.4	3,030	63,800	103%
IMR 4831	62.9	2,750	64.7	2,820	66.4	2,885	68.2	2,955	69.9	3,020	63,800	102%
IMR 7828SSC	66.3	2,740	68.2	2,810	70.0	2,875	71.8	2,945	73.7	3,015	63,600	104%
Ramshot Hunter	62.7	2,750	64.5	2,815	66.2	2,875	68.0	2,945	69.7	3,010	63,600	100%
Winchester StaBALL 6.5	61.1	2,750	62.8	2,815	64.5	2,875	66.2	2,940	67.9	3,000	63,700	93%
IMR 4350	60.5	2,735	62.2	2,800	63.9	2,860	65.5	2,920	67.2	2,985	63,700	98%
Accurate 3100	64.1	2,695	65.9	2,760	67.7	2,825	69.4	2,890	71.2	2,960	63,700	105%
Accurate 2700	58.9	2,705	60.5	2,765	62.2	2,830	63.8	2,890	65.4	2,950	63,800	90%
Alliant Reloder 16	58.7	2,715	60.3	2,770	62.0	2,835	63.6	2,895	65.2	2,950	63,700	98%
Winchester 760	59.3	2,700	61.0	2,765	62.6	2,825	64.3	2,890	65.9	2,950	63,700	92%
Vihtavuori N165	64.8	2,675	66.6	2,740	68.4	2,805	70.2	2,870	72.0	2,935	61,900	105%

190 gr Bullet · 25" barrel

COAL: 3.250" • Bullet length: 1.353" • Seat depth: 0.662" • Usable capacity: 73.0 / 84.9 gr H_2O

Powder	STEP 1 · 90%		STEP 2		STEP 3		STEP 4		STEP 5 · LIMIT			
	gr	fps	gr	fps	gr	fps	gr	fps	gr	fps	psi	Fill
Alliant Reloder 26	67.6	2,765	69.5	2,835	71.3	2,900	73.2	2,975	75.1	3,045	63,700	103%
Hodgdon H4350	61.0	2,740	62.7	2,800	64.4	2,865	66.1	2,930	67.8	2,995	63,700	94%
Hodgdon SUPERFORMANCE	63.3	2,730	65.0	2,795	66.8	2,860	68.5	2,920	70.3	2,990	63,600	94%
Vihtavuori N560	66.0	2,725	67.8	2,785	69.7	2,850	71.5	2,915	73.3	2,980	63,400	105%
Alliant Reloder 22	64.5	2,705	66.3	2,775	68.1	2,840	69.9	2,905	71.7	2,975	63,800	104%
Alliant Reloder 23	63.5	2,700	65.3	2,765	67.0	2,830	68.8	2,895	70.6	2,965	60,900	105%
Reload Swiss RS62	62.4	2,705	64.1	2,770	65.8	2,835	67.6	2,905	69.3	2,965	63,800	99%
Reload Swiss RS70	63.9	2,695	65.7	2,760	67.5	2,825	69.2	2,890	71.0	2,960	63,700	98%
Accurate 4350	60.7	2,700	62.4	2,760	64.1	2,820	65.7	2,880	67.4	2,945	63,600	96%
IMR 4831	61.8	2,685	63.5	2,750	65.3	2,815	67.0	2,880	68.7	2,945	63,600	101%
IMR 7828SSC	65.1	2,680	66.9	2,745	68.7	2,810	70.5	2,875	72.3	2,940	63,800	103%
Reload Swiss RS60	59.0	2,690	60.6	2,750	62.3	2,815	63.9	2,875	65.6	2,940	63,700	92%
Winchester Supreme 780	66.2	2,675	68.0	2,740	69.8	2,805	71.7	2,875	73.5	2,940	63,600	101%
IMR 4955	62.7	2,675	64.5	2,740	66.2	2,805	68.0	2,875	69.7	2,935	63,700	96%
Hodgdon H4831SC	64.0	2,665	65.8	2,730	67.5	2,795	69.3	2,860	71.1	2,925	63,700	98%
IMR 7828	64.7	2,650	66.5	2,715	68.3	2,780	70.1	2,845	71.9	2,910	63,800	99%
Winchester StaBALL 6.5	59.8	2,670	61.5	2,730	63.1	2,785	64.8	2,850	66.4	2,905	63,600	92%
IMR 4350	59.2	2,655	60.9	2,720	62.5	2,780	64.2	2,840	65.8	2,900	63,800	97%
IMR 4007 SSC	58.0	2,625	59.6	2,685	61.2	2,745	62.8	2,805	64.4	2,865	63,800	94%
IMR 4451	58.4	2,615	60.0	2,670	61.7	2,735	63.3	2,795	64.9	2,855	63,700	92%

200 gr Bullet · 25" barrel

COAL: 3.250" • Bullet length: 1.392" • Seat depth: 0.701" • Usable capacity: 72.4 / 84.9 gr H_2O

Powder	STEP 1 · 90%		STEP 2		STEP 3		STEP 4		STEP 5 · LIMIT			
	gr	fps	gr	fps	gr	fps	gr	fps	gr	fps	psi	Fill
Alliant Reloder 26	66.3	2,695	68.2	2,765	70.0	2,830	71.8	2,895	73.7	2,965	63,600	102%
Alliant Reloder 23	63.0	2,655	64.8	2,720	66.5	2,780	68.3	2,845	70.0	2,910	62,700	105%
Hodgdon SUPERFORMANCE	62.1	2,655	63.8	2,715	65.5	2,780	67.3	2,845	69.0	2,910	63,800	93%
Hodgdon H4350	59.7	2,660	61.4	2,720	63.0	2,780	64.7	2,840	66.3	2,900	63,600	92%
Alliant Reloder 22	63.3	2,635	65.0	2,700	66.8	2,765	68.5	2,825	70.3	2,895	63,600	103%
Vihtavuori N560	64.4	2,640	66.2	2,700	68.0	2,765	69.8	2,825	71.6	2,890	63,800	103%
Reload Swiss RS62	61.2	2,635	62.9	2,695	64.6	2,760	66.3	2,825	68.0	2,885	63,600	98%
Alliant Reloder 19	62.0	2,625	63.7	2,685	65.5	2,755	67.2	2,815	68.9	2,880	63,700	101%
IMR 4831	60.8	2,620	62.5	2,680	64.2	2,745	65.9	2,810	67.6	2,875	63,800	100%
Winchester Supreme 780	65.0	2,610	66.8	2,675	68.6	2,740	70.4	2,805	72.2	2,870	63,800	100%
Accurate 4350	59.4	2,615	61.0	2,675	62.7	2,735	64.3	2,795	66.0	2,860	63,600	95%
IMR 4955	61.7	2,610	63.4	2,675	65.1	2,735	66.8	2,800	68.5	2,860	63,800	95%
IMR 7828SSC	63.7	2,605	65.5	2,670	67.3	2,735	69.0	2,795	70.8	2,860	63,800	102%
Accurate MagPro	67.1	2,580	68.9	2,645	70.8	2,715	72.7	2,785	74.5	2,850	60,600	105%
Vihtavuori N555	58.8	2,615	60.4	2,675	62.0	2,730	63.7	2,795	65.3	2,850	63,700	97%
Hodgdon H4831	62.9	2,590	64.7	2,655	66.4	2,715	68.2	2,780	69.9	2,845	63,700	104%
Ramshot Hunter	60.4	2,600	62.1	2,660	63.8	2,725	65.4	2,780	67.1	2,845	63,700	98%
IMR 4350	57.9	2,575	59.5	2,635	61.1	2,690	62.7	2,750	64.3	2,810	63,700	95%
Winchester StaBALL 6.5	58.4	2,580	60.0	2,635	61.7	2,695	63.3	2,755	64.9	2,810	63,600	90%
Vihtavuori N165	62.6	2,545	64.3	2,605	66.1	2,665	67.8	2,725	69.6	2,790	63,600	103%

220 gr Bullet · 25" barrel

COAL: 3.250" • Bullet length: 1.396" • Seat depth: 0.705" • Usable capacity: 72.3 / 84.9 gr H_2O

Powder	STEP 1 · 90%		STEP 2		STEP 3		STEP 4		STEP 5 · LIMIT			
	gr	fps	gr	fps	gr	fps	gr	fps	gr	fps	psi	Fill
Alliant Reloder 26	64.6	2,580	66.4	2,640	68.2	2,705	70.0	2,770	71.8	2,835	63,700	100%
Accurate MagPro	66.9	2,530	68.8	2,595	70.6	2,660	72.5	2,725	74.3	2,790	63,800	105%
Ramshot Grand	67.1	2,530	68.9	2,590	70.8	2,655	72.7	2,725	74.5	2,785	62,800	105%
Vihtavuori N565	65.0	2,540	66.8	2,600	68.6	2,665	70.4	2,725	72.2	2,785	62,700	105%
Alliant Reloder 23	61.6	2,540	63.3	2,600	65.0	2,660	66.7	2,720	68.4	2,780	63,700	103%
Hodgdon SUPERFORMANCE	60.3	2,525	62.0	2,585	63.6	2,640	65.3	2,700	67.0	2,765	63,800	91%
Ramshot Magnum	68.0	2,505	69.9	2,570	71.8	2,635	73.7	2,700	75.6	2,765	62,500	105%
Alliant Reloder 22	61.6	2,520	63.3	2,580	65.0	2,640	66.7	2,700	68.4	2,760	63,600	101%
Alliant Reloder 19	60.5	2,515	62.2	2,575	63.9	2,635	65.5	2,695	67.2	2,755	63,600	99%
Reload Swiss RS76	67.7	2,500	69.6	2,565	71.5	2,625	73.3	2,685	75.2	2,750	63,300	105%
IMR 4831	59.4	2,505	61.0	2,565	62.7	2,625	64.3	2,685	66.0	2,745	63,700	98%
Vihtavuori N560	61.9	2,495	63.6	2,550	65.3	2,610	67.1	2,670	68.8	2,725	63,800	100%
Hodgdon H4831SC	61.2	2,480	62.9	2,540	64.6	2,595	66.3	2,655	68.0	2,715	63,700	95%
Hodgdon H4831	61.1	2,470	62.8	2,530	64.5	2,590	66.2	2,650	67.9	2,710	63,700	101%
Norma 204	58.1	2,475	59.7	2,530	61.3	2,585	62.9	2,645	64.5	2,700	63,800	94%
Ramshot Hunter	58.7	2,470	60.3	2,530	62.0	2,590	63.6	2,645	65.2	2,700	63,800	96%
IMR 7828	61.4	2,460	63.1	2,520	64.8	2,580	66.5	2,635	68.2	2,695	63,600	95%
Accurate 3100	60.1	2,455	61.8	2,515	63.5	2,575	65.1	2,630	66.8	2,690	63,800	100%
IMR 4350	56.0	2,440	57.5	2,495	59.1	2,550	60.7	2,605	62.2	2,660	63,800	92%
Vihtavuori N165	60.6	2,420	62.3	2,475	64.0	2,530	65.6	2,585	67.3	2,645	63,800	100%

230 gr Bullet · 25" barrel

COAL: 3.346" • Bullet length: 1.639" • Seat depth: 0.852" • Usable capacity: 69.6 / 84.9 gr H_2O

Powder	STEP 1 · 90%		STEP 2		STEP 3		STEP 4		STEP 5 · LIMIT			
	gr	fps	gr	fps	gr	fps	gr	fps	gr	fps	psi	Fill
Alliant Reloder 26	62.5	2,515	64.2	2,570	66.0	2,635	67.7	2,695	69.4	2,760	63,700	100%
Accurate MagPro	64.4	2,455	66.2	2,515	68.0	2,580	69.7	2,640	71.5	2,705	62,900	105%
Vihtavuori N565	62.6	2,470	64.3	2,525	66.0	2,585	67.8	2,645	69.5	2,705	61,700	105%
Alliant Reloder 23	59.5	2,470	61.1	2,525	62.8	2,585	64.4	2,640	66.1	2,700	63,600	103%
Ramshot Grand	64.5	2,445	66.3	2,510	68.1	2,570	69.9	2,635	71.7	2,700	61,900	105%
Alliant Reloder 22	59.6	2,455	61.3	2,515	62.9	2,570	64.5	2,625	66.2	2,690	63,800	101%
Hodgdon SUPERFORMANCE	58.3	2,455	59.9	2,515	61.5	2,570	63.2	2,630	64.8	2,685	63,600	91%
Ramshot Magnum	65.5	2,430	67.3	2,495	69.2	2,560	71.0	2,620	72.8	2,685	61,700	105%
Reload Swiss RS70	59.1	2,440	60.8	2,500	62.4	2,555	64.0	2,615	65.7	2,675	63,800	95%
Hodgdon H4350	55.7	2,445	57.3	2,505	58.8	2,560	60.4	2,615	61.9	2,670	63,600	90%
IMR 4831	57.4	2,435	59.0	2,495	60.6	2,555	62.2	2,610	63.8	2,670	63,700	98%
Winchester Supreme 780	61.1	2,435	62.8	2,490	64.5	2,550	66.2	2,610	67.9	2,670	63,800	98%
IMR 7828SSC	59.7	2,420	61.4	2,480	63.0	2,535	64.7	2,595	66.3	2,650	63,800	99%
Vihtavuori N560	59.9	2,430	61.5	2,480	63.2	2,540	64.8	2,590	66.5	2,650	63,700	100%
Hodgdon H4831SC	59.1	2,410	60.8	2,470	62.4	2,525	64.0	2,580	65.7	2,640	63,600	95%
Norma MRP	59.1	2,410	60.8	2,470	62.4	2,525	64.0	2,580	65.7	2,640	63,600	98%
Accurate 4350	55.7	2,415	57.3	2,470	58.8	2,525	60.4	2,580	61.9	2,635	63,800	93%
IMR 7828	59.3	2,395	61.0	2,455	62.6	2,510	64.3	2,570	65.9	2,625	63,700	95%
Norma 204	56.1	2,400	57.6	2,455	59.2	2,510	60.8	2,570	62.3	2,620	63,600	94%
Alliant Power Pro 4000-MR	57.0	2,395	58.6	2,450	60.1	2,500	61.7	2,560	63.3	2,615	63,600	93%

.308 Winchester

Winchester introduced the .308 Winchester in 1952. That was two years before the 7.62x51mm NATO was adopted in 1954. Both cartridges descend from the U.S. Army's T65 series of experimental cartridges. Those experimental rounds traced their lineage to the .300 Savage. Since then the civilian and military rounds have evolved separately. They are not identical. The case is about a half inch shorter than that of the .30-06 Springfield. This allows short and light actions while giving performance that approaches the older cartridge. Winchester chambered it in the Model 70 bolt-action rifle. Later it added its Model 88 lever-action and Model 100 semiautomatic rifles.

The .308 Winchester is widely used for hunting medium and large game. It is also used for target shooting such as Palma and metallic silhouette competition. Military and police precision rifles use it as well. Hunting loads commonly use bullets from about 150 to 180 grains. Nearly every major rifle and ammunition maker supports the cartridge. Its case is the parent of many others. Among them are the .243 Winchester, .260 Remington, 7mm-08 Remington, .338 Federal and .358 Winchester.

Cartridge specifications	
Bullet Diameter	**0.308" (7.82 mm)**
Max Case Length	**2.015" (51.18 mm)**
Case Trim Length	**2.005" (50.93 mm)**
Max COAL	**2.810" (71.37 mm)**
Primer Pocket	**Large Rifle**
Standard Twist	**1:12"**
Case Capacity	**55.9 gr H_2O**
Max Pressure	**62,000 psi (SAAMI)**

110 gr Bullet · 25" barrel

COAL: 2.500" • Bullet length: 0.872" • Seat depth: 0.387" • Usable capacity: 49.1 / 56.0 gr H_2O

Powder	STEP 1 · 90%		STEP 2		STEP 3		STEP 4		STEP 5 · LIMIT			
	gr	fps	gr	fps	gr	fps	gr	fps	gr	fps	psi	Fill
Hodgdon CFE BLK	41.6	3,245	42.8	3,320	43.9	3,385	45.1	3,460	46.2	3,530	61,800	97%
Hodgdon Leverevolution	48.5	3,205	49.9	3,285	51.2	3,360	52.5	3,435	53.9	3,520	59,700	105%
Alliant Power Pro 1200-R	42.1	3,165	43.3	3,235	44.5	3,310	45.6	3,375	46.8	3,450	61,900	97%
Norma 200	41.3	3,165	42.4	3,235	43.6	3,305	44.8	3,380	45.9	3,450	62,000	101%
Accurate 2230	45.2	3,160	46.5	3,235	47.7	3,300	49.0	3,375	50.2	3,445	61,800	104%
Shooters World SBR-SOCOM	35.8	3,180	36.8	3,245	37.8	3,310	38.8	3,380	39.8	3,445	61,900	83%
Accurate 2460	45.7	3,145	47.0	3,220	48.3	3,290	49.5	3,360	50.8	3,435	61,900	104%
Ramshot X-Terminator	44.8	3,150	46.0	3,220	47.3	3,290	48.5	3,360	49.8	3,435	61,800	103%
Reload Swiss RS40	42.9	3,135	44.1	3,210	45.3	3,280	46.5	3,355	47.7	3,425	61,800	103%
Hodgdon H335	45.4	3,115	46.6	3,185	47.9	3,260	49.1	3,330	50.4	3,405	61,700	102%
Alliant Reloder 7	39.3	3,090	40.4	3,160	41.5	3,225	42.6	3,290	43.7	3,360	62,000	95%
IMR 3031	43.4	3,075	44.6	3,145	45.8	3,215	47.0	3,285	48.2	3,360	58,800	105%
Alliant Reloder 10x	40.5	3,070	41.6	3,140	42.8	3,215	43.9	3,280	45.0	3,350	61,700	103%
Hodgdon H322	41.7	3,055	42.9	3,125	44.0	3,195	45.1	3,260	46.3	3,335	61,900	100%
Accurate 2015	41.8	3,055	42.9	3,120	44.1	3,190	45.3	3,260	46.4	3,325	61,800	98%
Shooters World Tactical Rifle	44.3	3,035	45.5	3,105	46.8	3,180	48.0	3,250	49.2	3,325	61,800	103%
Vihtavuori N130	39.2	3,050	40.3	3,120	41.4	3,185	42.5	3,255	43.6	3,320	61,800	102%
Accurate 2495	45.1	3,020	46.4	3,095	47.6	3,165	48.9	3,240	50.1	3,315	61,900	103%
Hodgdon H4198	37.6	3,045	38.6	3,110	39.7	3,175	40.8	3,245	41.8	3,305	61,900	98%
IMR 4198	37.0	3,000	38.0	3,060	39.0	3,120	40.1	3,190	41.1	3,250	61,800	101%

125 gr Bullet · 25" barrel

COAL: 2.700" • Bullet length: 1.036" • Seat depth: 0.350" • Usable capacity: 49.7 / 56.0 gr H_2O

Powder	STEP 1 · 90%		STEP 2		STEP 3		STEP 4		STEP 5 · LIMIT			
	gr	fps	gr	fps	gr	fps	gr	fps	gr	fps	psi	Fill
Hodgdon Leverevolution	48.2	3,095	49.6	3,170	50.9	3,240	52.3	3,320	53.6	3,395	61,700	103%
Vihtavuori N530	43.7	3,045	44.9	3,110	46.1	3,180	47.3	3,245	48.5	3,315	61,000	105%
Hodgdon CFE BLK	40.6	3,045	41.7	3,105	42.9	3,175	44.0	3,240	45.1	3,305	62,000	93%
Alliant AR-Comp	43.7	3,005	44.9	3,075	46.2	3,145	47.4	3,210	48.6	3,280	61,700	105%
Hodgdon H4895	44.9	2,985	46.1	3,055	47.4	3,125	48.6	3,190	49.9	3,265	61,900	104%
Accurate 2200	41.3	2,990	42.4	3,055	43.6	3,120	44.8	3,190	45.9	3,255	61,600	105%
IMR 4320	46.4	2,950	47.7	3,025	49.0	3,100	50.3	3,170	51.6	3,245	61,800	105%
IMR 3031	43.3	2,970	44.5	3,040	45.7	3,105	46.9	3,175	48.1	3,240	61,700	103%
Hodgdon H335	44.6	2,965	45.8	3,030	47.0	3,100	48.3	3,170	49.5	3,235	61,800	99%
Ramshot TAC	44.1	2,955	45.3	3,020	46.5	3,090	47.8	3,160	49.0	3,230	59,200	105%
Accurate 2460	44.3	2,960	45.5	3,020	46.8	3,090	48.0	3,155	49.2	3,225	61,600	99%
Accurate 2230	43.7	2,960	44.9	3,025	46.1	3,090	47.3	3,155	48.5	3,220	61,900	99%
Vihtavuori N140	46.0	2,935	47.3	3,005	48.5	3,070	49.8	3,145	51.1	3,215	59,100	105%
Alliant Power Pro Varmint	44.4	2,915	45.6	2,980	46.8	3,045	48.1	3,120	49.3	3,185	58,500	105%
Shooters World The Patriot	42.8	2,920	44.0	2,985	45.2	3,050	46.4	3,120	47.6	3,185	61,700	100%
Alliant Reloder 10x	39.8	2,925	40.9	2,990	42.0	3,055	43.1	3,115	44.2	3,180	61,900	100%
Accurate 2495	44.4	2,900	45.6	2,965	46.8	3,035	48.1	3,105	49.3	3,175	62,000	100%
Vihtavuori N135	43.2	2,915	44.4	2,980	45.6	3,045	46.8	3,110	48.0	3,175	61,900	105%
Hodgdon H322	40.9	2,895	42.0	2,960	43.1	3,020	44.3	3,090	45.4	3,155	61,900	97%
Vihtavuori N133	40.8	2,885	41.9	2,950	43.0	3,010	44.2	3,075	45.3	3,135	61,700	105%

150 gr Bullet · 25" barrel

COAL: 2.520" • Bullet length: 1.201" • Seat depth: 0.696" • Usable capacity: 44.4 / 56.0 gr H_2O

Powder	STEP 1 · 90%		STEP 2		STEP 3		STEP 4		STEP 5 · LIMIT			
	gr	fps	gr	fps	gr	fps	gr	fps	gr	fps	psi	Fill
Hodgdon Leverevolution	43.3	2,775	44.5	2,845	45.7	2,910	46.9	2,975	48.1	3,045	61,900	103%
Vihtavuori N530	38.9	2,725	40.0	2,785	41.0	2,840	42.1	2,905	43.2	2,965	61,800	104%
Hodgdon H4895	40.1	2,670	41.2	2,730	42.3	2,790	43.4	2,850	44.5	2,915	61,800	104%
IMR 4320	41.7	2,655	42.9	2,720	44.0	2,785	45.1	2,845	46.3	2,915	61,900	105%
Hodgdon CFE BLK	36.1	2,680	37.1	2,735	38.1	2,795	39.1	2,855	40.1	2,910	61,600	93%
Alliant AR-Comp	38.9	2,665	40.0	2,725	41.0	2,780	42.1	2,840	43.2	2,905	62,000	104%
Accurate 2200	36.9	2,655	37.9	2,715	39.0	2,775	40.0	2,835	41.0	2,895	61,600	105%
Vihtavuori N140	41.1	2,630	42.3	2,695	43.4	2,755	44.6	2,820	45.7	2,885	59,600	105%
Alliant Power Pro 1200-R	36.4	2,645	37.4	2,700	38.4	2,760	39.4	2,815	40.4	2,875	62,000	93%
Hodgdon Benchmark	38.1	2,620	39.1	2,675	40.2	2,735	41.3	2,800	42.3	2,855	59,200	105%
Accurate 2460	39.2	2,610	40.3	2,670	41.4	2,730	42.5	2,790	43.6	2,850	61,600	98%
Alliant Power Pro Varmint	39.7	2,605	40.8	2,665	41.9	2,725	43.0	2,785	44.1	2,845	58,600	105%
IMR 8208 XBR	38.6	2,605	39.7	2,665	40.8	2,730	41.8	2,785	42.9	2,845	59,300	105%
Accurate 2230	38.6	2,605	39.7	2,665	40.8	2,725	41.8	2,780	42.9	2,840	61,700	98%
Accurate 2495	39.6	2,595	40.7	2,655	41.8	2,715	42.9	2,780	44.0	2,840	61,800	100%
Ramshot X-Terminator	38.4	2,605	39.5	2,665	40.5	2,720	41.6	2,780	42.7	2,840	62,000	97%
Alliant Reloder 10x	35.5	2,600	36.5	2,660	37.5	2,720	38.4	2,770	39.4	2,830	61,800	100%
Shooters World Tactical Rifle	38.8	2,590	39.9	2,650	41.0	2,715	42.0	2,770	43.1	2,830	61,600	100%
Shooters World The Patriot	38.1	2,585	39.1	2,640	40.2	2,700	41.3	2,760	42.3	2,815	61,700	99%
Vihtavuori N135	38.3	2,585	39.4	2,645	40.5	2,705	41.5	2,755	42.6	2,815	62,000	104%

165 gr Bullet · 25" barrel

COAL: 2.740" • Bullet length: 1.277" • Seat depth: 0.551" • Usable capacity: 46.0 / 56.0 gr H_2O

Powder	STEP 1 · 90%		STEP 2		STEP 3		STEP 4		STEP 5 · LIMIT			
	gr	fps	gr	fps	gr	fps	gr	fps	gr	fps	psi	Fill
Hodgdon Leverevolution	43.3	2,680	44.5	2,745	45.7	2,810	46.9	2,870	48.1	2,935	62,000	100%
Hodgdon BL-C(2)	43.3	2,615	44.5	2,675	45.7	2,740	46.9	2,805	48.1	2,870	60,900	105%
IMR 4895	41.5	2,605	42.6	2,665	43.8	2,730	45.0	2,790	46.1	2,850	61,800	103%
Accurate 2520	41.5	2,590	42.6	2,645	43.8	2,710	45.0	2,770	46.1	2,830	61,800	103%
Hodgdon Varget	41.3	2,580	42.4	2,640	43.6	2,700	44.8	2,765	45.9	2,825	62,000	104%
IMR 4320	41.9	2,580	43.0	2,640	44.2	2,700	45.4	2,765	46.5	2,825	61,800	102%
Vihtavuori N530	38.1	2,590	39.1	2,645	40.2	2,705	41.3	2,765	42.3	2,815	61,800	99%
Shooters World The Creed	41.8	2,560	42.9	2,615	44.1	2,680	45.3	2,740	46.4	2,800	62,000	105%
Vihtavuori N140	41.4	2,560	42.5	2,615	43.7	2,680	44.9	2,740	46.0	2,800	61,800	102%
Hodgdon H4895	39.9	2,565	41.0	2,620	42.1	2,680	43.2	2,740	44.3	2,795	61,900	100%
IMR 4064	40.6	2,540	41.7	2,595	42.9	2,660	44.0	2,715	45.1	2,775	58,500	105%
Hodgdon H335	39.8	2,540	40.9	2,595	42.0	2,655	43.1	2,710	44.2	2,770	61,800	95%
Vihtavuori N540	41.0	2,540	42.1	2,595	43.3	2,660	44.4	2,715	45.5	2,770	60,800	105%
Hodgdon Benchmark	38.3	2,535	39.4	2,595	40.5	2,650	41.5	2,705	42.6	2,765	61,900	102%
Norma 203B	40.1	2,525	41.2	2,585	42.3	2,640	43.4	2,700	44.5	2,760	61,800	105%
IMR 8208 XBR	38.9	2,530	40.0	2,590	41.0	2,640	42.1	2,700	43.2	2,755	61,900	102%
Accurate 2495	39.7	2,515	40.8	2,570	41.9	2,630	43.0	2,690	44.1	2,745	62,000	96%
IMR 4166	39.2	2,510	40.3	2,565	41.4	2,625	42.4	2,680	43.5	2,735	59,300	105%
Shooters World Tactical Rifle	38.7	2,500	39.8	2,555	40.9	2,615	41.9	2,670	43.0	2,725	61,800	96%
Accurate 2460	38.8	2,490	39.9	2,545	41.0	2,605	42.0	2,655	43.1	2,710	61,900	94%

180 gr Bullet · 25" barrel

COAL: 2.730" • Bullet length: 1.331" • Seat depth: 0.616" • Usable capacity: 44.9 / 56.0 gr H_2O

Powder	STEP 1 · 90%		STEP 2		STEP 3		STEP 4		STEP 5 · LIMIT			
	gr	fps	gr	fps	gr	fps	gr	fps	gr	fps	psi	Fill
Hodgdon Leverevolution	41.7	2,550	42.9	2,610	44.0	2,670	45.1	2,725	46.3	2,790	61,800	99%
Hodgdon BL-C(2)	42.0	2,505	43.2	2,565	44.4	2,630	45.5	2,685	46.7	2,750	61,900	104%
Norma 201	38.3	2,480	39.3	2,535	40.4	2,595	41.5	2,650	42.5	2,705	60,600	105%
IMR 4895	39.8	2,475	40.9	2,530	42.0	2,585	43.1	2,645	44.2	2,700	61,800	102%
IMR 4320	40.4	2,455	41.5	2,515	42.6	2,570	43.8	2,635	44.9	2,695	61,800	101%
Hodgdon CFE 223	41.6	2,455	42.8	2,515	43.9	2,575	45.1	2,635	46.2	2,690	58,700	105%
Hodgdon Varget	39.7	2,455	40.8	2,510	41.9	2,570	43.0	2,625	44.1	2,685	61,800	102%
Accurate 2520	39.8	2,450	40.9	2,505	42.0	2,560	43.1	2,615	44.2	2,675	61,700	101%
Reload Swiss RS52	40.3	2,440	41.4	2,495	42.5	2,555	43.7	2,615	44.8	2,675	58,500	105%
Ramshot TAC	38.6	2,435	39.7	2,490	40.8	2,550	41.8	2,600	42.9	2,660	61,800	102%
Shooters World The Creed	40.1	2,430	41.2	2,485	42.4	2,550	43.5	2,605	44.6	2,660	61,800	103%
Vihtavuori N140	39.7	2,430	40.8	2,485	41.9	2,540	43.0	2,595	44.1	2,655	61,800	100%
Hodgdon H4895	38.3	2,430	39.3	2,485	40.4	2,540	41.5	2,595	42.5	2,650	61,800	98%
Alliant Power Pro Varmint	38.9	2,420	40.0	2,475	41.0	2,525	42.1	2,585	43.2	2,640	61,900	102%
Hodgdon H335	38.3	2,410	39.3	2,460	40.4	2,515	41.5	2,570	42.5	2,625	61,800	94%
Vihtavuori N540	39.3	2,410	40.4	2,465	41.5	2,515	42.6	2,570	43.7	2,625	61,800	103%
Accurate 2495	38.2	2,390	39.3	2,445	40.3	2,500	41.4	2,555	42.4	2,610	61,800	95%
Reload Swiss RS50	40.3	2,385	41.4	2,440	42.5	2,495	43.7	2,555	44.8	2,610	59,200	105%
Alliant AR-Comp	36.7	2,385	37.7	2,435	38.8	2,490	39.8	2,545	40.8	2,595	62,000	97%
Accurate 2460	37.1	2,350	38.1	2,400	39.2	2,455	40.2	2,505	41.2	2,555	61,800	92%

200 gr Bullet · 25" barrel

COAL: 2.795" • Bullet length: 1.476" • Seat depth: 0.696" • Usable capacity: 43.4 / 56.0 gr H_2O

Powder	STEP 1 · 90%		STEP 2		STEP 3		STEP 4		STEP 5 · LIMIT			
	gr	fps	gr	fps	gr	fps	gr	fps	gr	fps	psi	Fill
Hodgdon Leverevolution	39.7	2,390	40.8	2,445	41.9	2,500	43.0	2,555	44.1	2,615	61,900	97%
Hodgdon BL-C(2)	40.1	2,355	41.2	2,410	42.4	2,470	43.5	2,525	44.6	2,585	61,700	103%
Winchester 748	39.9	2,350	41.0	2,405	42.1	2,460	43.2	2,520	44.3	2,575	59,400	105%
Hodgdon CFE 223	40.2	2,330	41.3	2,385	42.5	2,445	43.6	2,500	44.7	2,555	61,300	105%
Norma 201	36.6	2,340	37.6	2,390	38.7	2,450	39.7	2,500	40.7	2,555	61,800	104%
Reload Swiss RS52	39.0	2,320	40.1	2,375	41.1	2,430	42.2	2,485	43.3	2,540	60,500	105%
IMR 4320	38.6	2,310	39.7	2,365	40.8	2,425	41.8	2,475	42.9	2,530	61,800	99%
Hodgdon Varget	37.7	2,300	38.8	2,355	39.8	2,405	40.9	2,460	41.9	2,510	61,700	100%
IMR 4064	37.6	2,290	38.6	2,340	39.7	2,395	40.8	2,450	41.8	2,500	61,800	103%
Shooters World The Creed	38.2	2,280	39.3	2,335	40.3	2,385	41.4	2,445	42.4	2,495	61,800	102%
Alliant Reloder 15	37.9	2,280	39.0	2,335	40.0	2,385	41.0	2,435	42.1	2,490	61,600	104%
Ramshot TAC	36.8	2,280	37.8	2,330	38.8	2,380	39.9	2,435	40.9	2,490	62,000	100%
Reload Swiss RS50	39.0	2,265	40.1	2,315	41.1	2,365	42.2	2,420	43.3	2,475	61,400	105%
Hodgdon H4895	36.3	2,265	37.3	2,315	38.3	2,370	39.3	2,420	40.3	2,470	61,900	96%
Vihtavuori N140	37.5	2,260	38.5	2,310	39.6	2,365	40.7	2,420	41.7	2,470	61,700	98%
Vihtavuori N530	34.1	2,270	35.0	2,320	36.0	2,370	37.0	2,420	37.9	2,470	61,700	94%
Alliant Reloder 17	40.2	2,225	41.3	2,280	42.5	2,340	43.6	2,395	44.7	2,455	61,900	103%
Norma 202	36.5	2,250	37.5	2,300	38.5	2,350	39.6	2,405	40.6	2,455	62,000	101%
Hodgdon H335	36.4	2,245	37.4	2,295	38.4	2,345	39.4	2,395	40.4	2,450	61,800	92%
Vihtavuori N540	37.1	2,240	38.1	2,290	39.2	2,340	40.2	2,390	41.2	2,440	61,900	101%

210 gr Bullet · 25" barrel

COAL: 2.800" • Bullet length: 1.474" • Seat depth: 0.688" • Usable capacity: 43.5 / 56.0 gr H_2O

Powder	STEP 1 · 90%		STEP 2		STEP 3		STEP 4		STEP 5 · LIMIT			
	gr	fps	gr	fps	gr	fps	gr	fps	gr	fps	psi	Fill
Hodgdon Leverevolution	39.2	2,325	40.3	2,380	41.4	2,435	42.4	2,485	43.5	2,540	61,800	95%
Winchester 748	40.0	2,320	41.1	2,375	42.2	2,430	43.3	2,485	44.4	2,540	61,700	105%
Hodgdon BL-C(2)	39.8	2,300	40.9	2,355	42.0	2,410	43.1	2,465	44.2	2,520	61,800	102%
Hodgdon CFE 223	39.9	2,280	41.0	2,330	42.1	2,385	43.2	2,440	44.3	2,495	61,800	104%
Reload Swiss RS52	38.9	2,280	40.0	2,335	41.0	2,385	42.1	2,440	43.2	2,495	61,900	104%
Norma 201	36.2	2,280	37.2	2,335	38.2	2,385	39.2	2,440	40.2	2,490	61,900	102%
IMR 4320	38.3	2,255	39.3	2,310	40.4	2,365	41.5	2,420	42.5	2,470	61,900	98%
Hodgdon Varget	37.3	2,240	38.3	2,290	39.3	2,340	40.4	2,395	41.4	2,445	62,000	99%
Shooters World Match Rifle	37.4	2,230	38.4	2,280	39.5	2,335	40.5	2,385	41.5	2,435	61,900	98%
IMR 4064	37.1	2,230	38.1	2,280	39.2	2,335	40.2	2,380	41.2	2,430	61,900	101%
Shooters World The Creed	37.6	2,215	38.6	2,265	39.7	2,320	40.8	2,375	41.8	2,425	61,700	100%
Alliant Reloder 15	37.3	2,215	38.3	2,265	39.3	2,315	40.4	2,370	41.4	2,415	61,700	102%
Reload Swiss RS50	38.6	2,205	39.7	2,260	40.8	2,310	41.8	2,360	42.9	2,415	61,800	104%
Vihtavuori N550	39.2	2,210	40.3	2,260	41.4	2,310	42.4	2,360	43.5	2,410	59,900	105%
Accurate 2520	37.0	2,205	38.0	2,255	39.0	2,300	40.1	2,355	41.1	2,405	61,800	97%
Vihtavuori N140	37.0	2,200	38.0	2,250	39.0	2,295	40.1	2,350	41.1	2,400	62,000	96%
Alliant Power Pro Varmint	36.4	2,190	37.4	2,240	38.4	2,290	39.4	2,340	40.4	2,390	61,700	98%
Hodgdon H4895	35.6	2,190	36.6	2,240	37.6	2,290	38.6	2,340	39.6	2,390	61,600	94%
Accurate 2495	35.9	2,175	36.9	2,230	37.9	2,280	38.9	2,330	39.9	2,380	62,000	92%
Norma 202	35.9	2,180	36.9	2,225	37.9	2,275	38.9	2,325	39.9	2,375	62,000	99%

7.5x55 Swiss

Eduard Rubin was a Swiss Army officer and engineer. He developed the 7.5x55mm Swiss cartridge. It was adopted in 1889 for the Schmidt-Rubin Model 1889 rifle. In 1911 Switzerland adopted a modernized loading called the GP 11. It used a full-metal-jacket boat-tail spitzer bullet. Improved rifles able to handle it were adopted along with it. The cartridge uses an original rimless bottlenecked case. It served in the Model 1911 rifle and carbine, the K31 carbine and later the SIG SG 510 battle rifle.

The GP 11 load fires a 174-grain bullet at about 2,560 fps. This places it close to the .308 Winchester in performance. Swiss military production ended in 1994 but resumed in 2016. The cartridge remains in use with the MG 51 machine gun as well as among sport shooters. Surplus K31 carbines made it familiar in the United States. Commercial ammunition and brass are available there for target shooting and hunting.

Cartridge specifications	
Bullet Diameter	**0.308" (7.82 mm)**
Max Case Length	**2.189" (55.60 mm)**
Case Trim Length	**2.179" (55.35 mm)**
Max COAL	**3.059" (77.70 mm)**
Primer Pocket	**Large Rifle**
Standard Twist	**1:11"**
Case Capacity	**65.3 gr H_2O**
Max Pressure	**3,800 bar / 55,114 psi (C.I.P.)**

110 gr Bullet · 25" barrel

COAL: 2.546" • Bullet length: 0.665" • Seat depth: 0.308" • Usable capacity: 60.0 / 65.3 gr H_2O

Powder	STEP 1 · 90%		STEP 2		STEP 3		STEP 4		STEP 5 · LIMIT			
	gr	fps	gr	fps	gr	fps	gr	fps	gr	fps	psi	Fill
Vihtavuori N550	53.5	3,065	55.0	3,135	56.5	3,210	57.9	3,275	59.4	3,350	55,000	104%
Hodgdon Leverevolution	48.7	3,060	50.1	3,135	51.4	3,200	52.8	3,270	54.1	3,340	54,900	86%
Vihtavuori N540	49.1	3,060	50.5	3,130	51.8	3,195	53.1	3,260	54.5	3,325	55,000	96%
Accurate 2520	47.2	3,025	48.5	3,090	49.8	3,155	51.1	3,215	52.4	3,280	55,000	90%
Alliant Reloder 15	48.9	2,995	50.3	3,065	51.6	3,130	52.9	3,195	54.3	3,265	55,000	97%
Hodgdon CFE 223	49.6	2,985	51.0	3,055	52.4	3,125	53.7	3,190	55.1	3,260	54,900	93%
Vihtavuori N140	47.9	2,980	49.2	3,045	50.5	3,110	51.9	3,180	53.2	3,245	55,000	90%
Norma 202	46.0	2,975	47.3	3,040	48.5	3,100	49.8	3,165	51.1	3,230	54,900	92%
Vihtavuori N135	45.0	2,980	46.3	3,045	47.5	3,105	48.8	3,170	50.0	3,230	54,900	90%
Ramshot Big Game	51.6	2,945	53.0	3,015	54.5	3,085	55.9	3,155	57.3	3,225	55,000	97%
Winchester 748	48.5	2,945	49.9	3,020	51.2	3,085	52.5	3,150	53.9	3,220	55,000	92%
Winchester StaBALL Match	47.3	2,940	48.6	3,005	50.0	3,075	51.3	3,140	52.6	3,210	55,000	98%
IMR 4064	47.0	2,935	48.3	3,000	49.6	3,065	50.9	3,130	52.2	3,195	54,900	93%
IMR 3031	43.1	2,910	44.3	2,975	45.5	3,035	46.7	3,100	47.9	3,165	55,000	85%
Accurate 2700	51.0	2,875	52.4	2,945	53.9	3,020	55.3	3,090	56.7	3,160	55,000	96%
IMR 4320	46.3	2,885	47.6	2,955	48.8	3,015	50.1	3,085	51.4	3,150	55,000	86%
Accurate 4350	54.3	2,830	55.8	2,905	57.3	2,980	58.8	3,055	60.3	3,130	54,800	105%
Hodgdon H414	51.3	2,840	52.7	2,905	54.1	2,975	55.6	3,050	57.0	3,120	55,000	97%
Winchester 760	51.5	2,835	52.9	2,905	54.4	2,980	55.8	3,045	57.2	3,115	55,000	98%
Norma 204	52.9	2,795	54.4	2,870	55.8	2,935	57.3	3,010	58.8	3,090	55,000	103%

150 gr Bullet · 25" barrel

COAL: 2.650" • Bullet length: 1.131" • Seat depth: 0.670" • Usable capacity: 54.3 / 65.3 gr H_2O

Powder	STEP 1 · 90%		STEP 2		STEP 3		STEP 4		STEP 5 · LIMIT			
	gr	fps	gr	fps	gr	fps	gr	fps	gr	fps	psi	Fill
Vihtavuori N550	45.9	2,615	47.2	2,675	48.5	2,735	49.7	2,790	51.0	2,850	54,900	99%
Hodgdon Leverevolution	42.6	2,605	43.8	2,665	45.0	2,725	46.1	2,780	47.3	2,840	55,000	83%
Winchester StaBALL 6.5	47.6	2,575	48.9	2,635	50.3	2,700	51.6	2,760	52.9	2,825	55,100	98%
Alliant Reloder 16	46.2	2,555	47.5	2,615	48.8	2,675	50.0	2,730	51.3	2,790	54,200	105%
Accurate 4350	48.0	2,530	49.3	2,595	50.6	2,655	52.0	2,720	53.3	2,785	54,900	103%
Hodgdon CFE 223	43.4	2,555	44.6	2,610	45.8	2,670	47.0	2,725	48.2	2,785	54,900	90%
Ramshot Big Game	45.4	2,550	46.6	2,605	47.9	2,670	49.1	2,725	50.4	2,785	55,100	95%
Hodgdon H380	44.6	2,525	45.8	2,585	47.0	2,640	48.3	2,700	49.5	2,760	55,000	97%
Hodgdon SUPERFORMANCE	49.3	2,490	50.7	2,555	52.0	2,615	53.4	2,680	54.8	2,750	55,000	99%
IMR 4350	47.0	2,505	48.3	2,565	49.6	2,625	50.9	2,690	52.2	2,750	54,900	103%
Accurate 2700	45.0	2,505	46.3	2,565	47.5	2,620	48.8	2,685	50.0	2,740	54,900	94%
IMR 4895	40.4	2,520	41.5	2,575	42.6	2,625	43.8	2,685	44.9	2,740	55,000	85%
Ramshot Hunter	47.9	2,485	49.2	2,545	50.5	2,605	51.9	2,670	53.2	2,735	54,900	104%
Hodgdon H414	45.2	2,485	46.5	2,545	47.7	2,605	49.0	2,665	50.2	2,720	54,900	94%
IMR 4064	40.2	2,490	41.3	2,540	42.5	2,600	43.6	2,655	44.7	2,705	55,000	88%
IMR 4320	40.7	2,480	41.8	2,535	43.0	2,595	44.1	2,650	45.2	2,705	55,000	84%
Norma URP	46.2	2,450	47.5	2,510	48.8	2,575	50.0	2,630	51.3	2,695	55,100	104%
Vihtavuori N160	47.3	2,445	48.6	2,505	49.9	2,565	51.2	2,625	52.5	2,685	53,300	105%
IMR 3031	37.3	2,450	38.3	2,505	39.3	2,555	40.4	2,610	41.4	2,660	55,000	81%
IMR 4831	47.2	2,395	48.5	2,455	49.8	2,515	51.1	2,580	52.4	2,640	55,000	104%

165 gr Bullet · 25" barrel

COAL: 2.953" • Bullet length: 1.248" • Seat depth: 0.484" • Usable capacity: 56.7 / 65.3 gr H_2O

Powder	STEP 1 · 90%		STEP 2		STEP 3		STEP 4		STEP 5 · LIMIT			
	gr	fps	gr	fps	gr	fps	gr	fps	gr	fps	psi	Fill
Winchester StaBALL 6.5	47.6	2,500	48.9	2,555	50.3	2,615	51.6	2,675	52.9	2,730	55,000	94%
Accurate 4350	48.2	2,485	49.6	2,545	50.9	2,605	52.3	2,665	53.6	2,725	55,100	99%
Vihtavuori N555	49.3	2,475	50.7	2,540	52.0	2,595	53.4	2,660	54.8	2,720	55,000	104%
Alliant Reloder 26	52.9	2,455	54.4	2,520	55.8	2,580	57.3	2,645	58.8	2,715	55,100	104%
Hodgdon SUPERFORMANCE	49.6	2,455	51.0	2,520	52.4	2,580	53.7	2,640	55.1	2,700	54,900	95%
Alliant Reloder 16	45.9	2,470	47.2	2,525	48.5	2,585	49.7	2,635	51.0	2,695	54,900	100%
Vihtavuori N550	44.7	2,480	46.0	2,535	47.2	2,590	48.5	2,645	49.7	2,695	55,000	92%
IMR 4350	47.0	2,450	48.3	2,505	49.6	2,565	50.9	2,625	52.2	2,680	55,000	99%
Norma 204	47.2	2,425	48.5	2,485	49.8	2,540	51.1	2,600	52.4	2,660	55,000	97%
Reload Swiss RS60	45.6	2,405	46.9	2,465	48.2	2,525	49.4	2,585	50.7	2,645	54,900	92%
Vihtavuori N160	47.9	2,415	49.2	2,470	50.5	2,530	51.9	2,590	53.2	2,645	55,000	102%
Norma MRP	50.0	2,385	51.4	2,445	52.8	2,505	54.2	2,565	55.6	2,630	54,900	102%
IMR 7828SSC	51.3	2,375	52.7	2,440	54.1	2,500	55.6	2,565	57.0	2,625	55,100	105%
Hodgdon H4831SC	49.8	2,375	51.2	2,435	52.5	2,490	53.9	2,550	55.3	2,615	55,000	98%
IMR 4955	48.5	2,370	49.9	2,430	51.2	2,490	52.5	2,545	53.9	2,610	55,000	96%
IMR 4320	40.7	2,390	41.8	2,445	43.0	2,500	44.1	2,550	45.2	2,605	54,900	80%
IMR 4831	47.5	2,360	48.8	2,420	50.1	2,480	51.5	2,545	52.8	2,605	54,900	100%
IMR 4895	39.8	2,400	40.9	2,450	42.0	2,505	43.1	2,555	44.2	2,605	55,100	81%
Hodgdon H4831	49.8	2,350	51.2	2,410	52.5	2,465	53.9	2,525	55.3	2,590	54,900	105%
IMR 4064	39.8	2,385	40.9	2,435	42.0	2,485	43.1	2,535	44.2	2,585	54,900	83%

180 gr Bullet · 25" barrel

COAL: 2.850" • Bullet length: 1.288" • Seat depth: 0.627" • Usable capacity: 54.2 / 65.3 gr H_2O

Powder	STEP 1 · 90%		STEP 2		STEP 3		STEP 4		STEP 5 · LIMIT			
	gr	fps	gr	fps	gr	fps	gr	fps	gr	fps	psi	Fill
Vihtavuori N555	46.9	2,375	48.2	2,435	49.5	2,490	50.8	2,545	52.1	2,605	54,900	103%
Alliant Reloder 26	50.5	2,355	51.9	2,415	53.3	2,475	54.7	2,535	56.1	2,600	55,000	104%
Accurate 4350	45.9	2,370	47.2	2,425	48.5	2,485	49.7	2,535	51.0	2,595	54,900	98%
Winchester StaBALL 6.5	45.4	2,375	46.6	2,430	47.9	2,485	49.1	2,535	50.4	2,595	55,000	94%
Hodgdon SUPERFORMANCE	47.3	2,350	48.6	2,405	50.0	2,465	51.3	2,525	52.6	2,580	55,000	95%
Alliant Reloder 16	43.5	2,345	44.7	2,395	45.9	2,450	47.1	2,500	48.3	2,555	54,900	99%
IMR 4350	44.6	2,330	45.9	2,390	47.1	2,440	48.4	2,500	49.6	2,555	55,000	98%
Hodgdon H4350	44.4	2,330	45.6	2,385	46.8	2,440	48.1	2,495	49.3	2,550	55,000	92%
Ramshot Big Game	43.1	2,335	44.3	2,390	45.5	2,445	46.7	2,495	47.9	2,550	55,100	90%
Vihtavuori N550	42.2	2,340	43.4	2,390	44.5	2,440	45.7	2,490	46.9	2,545	54,900	91%
Norma 204	45.0	2,310	46.3	2,370	47.5	2,425	48.8	2,480	50.0	2,535	55,100	97%
Alliant Reloder 22	48.0	2,300	49.3	2,355	50.6	2,410	52.0	2,475	53.3	2,530	55,100	104%
Vihtavuori N160	45.5	2,300	46.8	2,355	48.0	2,405	49.3	2,465	50.6	2,520	55,000	101%
IMR 7828SSC	48.8	2,280	50.1	2,340	51.5	2,400	52.9	2,460	54.2	2,515	54,900	104%
Norma MRP	47.7	2,285	49.0	2,340	50.4	2,400	51.7	2,455	53.0	2,515	54,900	102%
Alliant Reloder 19	46.4	2,265	47.7	2,320	49.0	2,380	50.3	2,440	51.6	2,495	55,000	101%
Hodgdon H4831	47.4	2,250	48.7	2,305	50.0	2,360	51.4	2,425	52.7	2,480	54,900	104%
IMR 4320	38.8	2,265	39.9	2,320	41.0	2,370	42.0	2,420	43.1	2,470	55,100	80%
Shooters World SW4350	44.4	2,240	45.6	2,290	46.8	2,345	48.1	2,400	49.3	2,455	55,000	99%
IMR 4064	37.6	2,245	38.6	2,295	39.7	2,345	40.8	2,395	41.8	2,440	55,000	83%

210 gr Bullet · 25" barrel

COAL: 3.059" • Bullet length: 1.464" • Seat depth: 0.594" • Usable capacity: 54.7 / 65.3 gr H_2O

Powder	STEP 1 · 90%		STEP 2		STEP 3		STEP 4		STEP 5 · LIMIT			
	gr	fps	gr	fps	gr	fps	gr	fps	gr	fps	psi	Fill
Vihtavuori N560	49.1	2,265	50.5	2,320	51.9	2,370	53.2	2,425	54.6	2,480	55,000	104%
Alliant Reloder 26	49.0	2,235	50.4	2,295	51.7	2,345	53.0	2,400	54.4	2,460	55,000	100%
Alliant Reloder 23	46.7	2,225	48.0	2,275	49.3	2,330	50.6	2,385	51.9	2,440	54,900	103%
Vihtavuori N555	44.5	2,225	45.7	2,275	47.0	2,325	48.2	2,375	49.4	2,425	55,000	97%
Hodgdon SUPERFORMANCE	45.7	2,205	47.0	2,260	48.3	2,315	49.5	2,365	50.8	2,420	55,000	91%
Alliant Reloder 22	46.4	2,180	47.7	2,230	49.0	2,285	50.2	2,335	51.5	2,390	55,000	100%
Winchester StaBALL 6.5	43.5	2,190	44.7	2,240	45.9	2,290	47.1	2,340	48.3	2,390	54,900	89%
IMR 7828SSC	47.0	2,165	48.3	2,215	49.6	2,270	50.9	2,320	52.2	2,375	55,000	99%
Reload Swiss RS76	51.1	2,150	52.5	2,205	54.0	2,265	55.4	2,320	56.8	2,375	54,900	105%
Ramshot Hunter	44.3	2,165	45.5	2,215	46.8	2,270	48.0	2,320	49.2	2,370	54,900	96%
Alliant Reloder 19	45.0	2,150	46.3	2,205	47.5	2,255	48.8	2,310	50.0	2,360	55,000	97%
Hodgdon H4350	42.2	2,160	43.4	2,210	44.5	2,255	45.7	2,305	46.9	2,360	55,100	86%
IMR 4350	42.6	2,165	43.8	2,215	45.0	2,265	46.1	2,310	47.3	2,360	54,900	93%
Norma 204	43.5	2,160	44.7	2,210	45.9	2,260	47.1	2,310	48.3	2,360	54,900	93%
Vihtavuori N170	49.7	2,155	51.1	2,205	52.5	2,260	53.8	2,305	55.2	2,360	54,700	105%
Accurate MagPro	49.9	2,125	51.3	2,185	52.6	2,235	54.0	2,295	55.4	2,350	55,000	103%
IMR 7828	46.6	2,135	47.9	2,185	49.2	2,240	50.5	2,290	51.8	2,345	54,900	95%
Hodgdon H4831	45.8	2,130	47.1	2,180	48.3	2,230	49.6	2,285	50.9	2,340	54,900	100%
Alliant Reloder 16	41.1	2,145	42.3	2,195	43.4	2,240	44.6	2,290	45.7	2,335	55,100	93%
Vihtavuori N160	43.5	2,130	44.7	2,180	45.9	2,230	47.1	2,280	48.3	2,325	54,900	96%

.325 WSM

Winchester introduced the .325 Winchester Short Magnum (WSM) at the 2005 SHOT Show. It was the largest-caliber member of the company's short magnum family. The cartridge was created by necking up the .300 WSM case to accept .323-inch (8mm) bullets. Its rimless and unbelted case allows 8mm magnum performance in short-action rifles.

Winchester's initial factory loads drove a 180-grain bullet at about 3,060 fps, a 200-grain bullet at about 2,950 fps and a 220-grain bullet at about 2,840 fps. The cartridge was designed for medium to large thin-skinned game. This includes deer, elk, moose, bear and African plains game. Among European hunters it has drawn some favorable comparisons with the 8x68mm S. Yet it has achieved only modest commercial success. This is partly because North American hunters have traditionally favored .30-caliber cartridges. It remains in limited production and has seen little use in competitive shooting or military applications.

Cartridge specifications	
Bullet Diameter	**0.323" (8.20 mm)**
Max Case Length	**2.100" (53.34 mm)**
Case Trim Length	**2.090" (53.09 mm)**
Max COAL	**2.860" (72.64 mm)**
Primer Pocket	**Large Rifle**
Standard Twist	**1:10"**
Case Capacity	**80.2 gr H_2O**
Max Pressure	**65,000 psi (SAAMI)**

150 gr Bullet · 25" barrel

COAL: 2.757" • Bullet length: 0.980" • Seat depth: 0.323" • Usable capacity: 73.5 / 80.2 gr H_2O

Powder	STEP 1 · 90%		STEP 2		STEP 3		STEP 4		STEP 5 · LIMIT			
	gr	fps	gr	fps	gr	fps	gr	fps	gr	fps	psi	Fill
Winchester StaBALL 6.5	66.6	3,105	68.4	3,180	70.3	3,255	72.2	3,330	74.0	3,405	64,900	101%
Hodgdon Leverevolution	59.7	3,120	61.4	3,190	63.0	3,255	64.7	3,325	66.3	3,395	64,800	86%
Vihtavuori N550	63.5	3,095	65.3	3,165	67.0	3,230	68.8	3,305	70.6	3,375	64,900	101%
Hodgdon SUPERFORMANCE	69.3	3,045	71.2	3,120	73.2	3,205	75.1	3,280	77.0	3,360	64,800	102%
Reload Swiss RS52	60.1	3,080	61.8	3,150	63.5	3,220	65.1	3,290	66.8	3,360	64,900	95%
Ramshot Big Game	63.8	3,070	65.6	3,140	67.3	3,210	69.1	3,280	70.9	3,355	64,800	98%
Hodgdon H380	63.5	3,065	65.3	3,135	67.0	3,205	68.8	3,280	70.5	3,350	64,800	102%
Alliant Power Pro 2000-MR	62.4	3,055	64.1	3,125	65.8	3,195	67.6	3,270	69.3	3,340	64,800	99%
Alliant Reloder 15	59.3	3,050	61.0	3,120	62.6	3,185	64.3	3,250	65.9	3,315	64,900	96%
Hodgdon H4895	57.0	3,050	58.6	3,120	60.1	3,180	61.7	3,245	63.3	3,315	65,000	89%
Hodgdon H4350	66.1	3,010	67.9	3,085	69.8	3,165	71.6	3,235	73.4	3,310	65,000	101%
Hodgdon H414	63.8	3,010	65.6	3,080	67.3	3,150	69.1	3,225	70.9	3,300	64,900	98%
Winchester 760	64.2	3,010	66.0	3,080	67.8	3,155	69.5	3,220	71.3	3,295	64,800	100%
Accurate 4064	58.8	3,015	60.4	3,080	62.0	3,145	63.7	3,215	65.3	3,285	64,900	99%
Hodgdon Varget	57.8	3,020	59.4	3,085	61.0	3,155	62.6	3,220	64.2	3,285	64,900	91%
Alliant Power Pro 4000-MR	67.3	2,975	69.2	3,050	71.0	3,125	72.9	3,200	74.8	3,280	64,800	104%
IMR 4064	58.0	3,020	59.6	3,085	61.2	3,150	62.8	3,215	64.4	3,280	65,000	94%
Reload Swiss RS50	59.7	3,010	61.4	3,075	63.0	3,140	64.7	3,210	66.3	3,275	65,000	95%
Shooters World The Creed	58.1	2,990	59.7	3,055	61.3	3,120	63.0	3,190	64.6	3,255	64,800	91%
IMR 4451	63.9	2,940	65.7	3,010	67.5	3,085	69.2	3,155	71.0	3,230	64,800	100%

170 gr Bullet · 25" barrel

COAL: 2.710" • Bullet length: 1.075" • Seat depth: 0.465" • Usable capacity: 71.0 / 80.2 gr H_2O

Powder	STEP 1 · 90%		STEP 2		STEP 3		STEP 4		STEP 5 · LIMIT			
	gr	fps	gr	fps	gr	fps	gr	fps	gr	fps	psi	Fill
Winchester StaBALL 6.5	63.5	2,925	65.3	2,995	67.0	3,060	68.8	3,130	70.5	3,200	64,900	100%
Accurate 4350	64.2	2,905	66.0	2,975	67.8	3,045	69.5	3,115	71.3	3,190	63,600	105%
Hodgdon SUPERFORMANCE	66.2	2,895	68.0	2,965	69.9	3,045	71.8	3,120	73.6	3,190	64,800	101%
Hodgdon Leverevolution	56.5	2,905	58.1	2,970	59.6	3,035	61.2	3,100	62.8	3,165	64,800	84%
Ramshot Big Game	60.8	2,890	62.5	2,955	64.2	3,020	65.8	3,085	67.5	3,150	65,000	97%
Reload Swiss RS52	57.2	2,890	58.8	2,955	60.4	3,020	61.9	3,080	63.5	3,150	64,800	94%
Reload Swiss RS60	61.7	2,860	63.4	2,925	65.2	3,000	66.9	3,070	68.6	3,140	64,900	99%
Alliant Power Pro 2000-MR	59.3	2,870	61.0	2,940	62.6	3,000	64.3	3,070	65.9	3,135	64,800	97%
Vihtavuori N550	59.7	2,885	61.4	2,950	63.0	3,010	64.7	3,075	66.3	3,135	64,800	98%
Hodgdon H4350	62.6	2,850	64.3	2,920	66.1	2,990	67.8	3,060	69.6	3,130	65,000	99%
IMR 4350	62.4	2,845	64.1	2,910	65.8	2,980	67.6	3,050	69.3	3,120	64,700	105%
Alliant Power Pro 4000-MR	64.4	2,830	66.2	2,900	68.0	2,970	69.7	3,035	71.5	3,110	64,800	103%
Hodgdon H414	60.8	2,840	62.5	2,910	64.2	2,975	65.9	3,045	67.6	3,110	65,000	97%
Winchester 760	61.2	2,840	62.9	2,910	64.6	2,975	66.3	3,040	68.0	3,110	64,900	98%
IMR 4955	65.2	2,800	67.0	2,875	68.8	2,945	70.6	3,020	72.4	3,090	64,800	103%
Ramshot Hunter	63.2	2,810	65.0	2,880	66.7	2,945	68.5	3,020	70.2	3,085	64,900	105%
Vihtavuori N150	56.1	2,830	57.6	2,890	59.2	2,955	60.8	3,015	62.3	3,075	64,900	98%
IMR 4451	61.0	2,790	62.7	2,860	64.4	2,925	66.1	2,995	67.8	3,060	65,000	99%
Shooters World Long Rifle	57.6	2,765	59.2	2,830	60.8	2,895	62.4	2,955	64.0	3,020	64,900	99%
Vihtavuori N160	61.8	2,745	63.5	2,805	65.3	2,875	67.0	2,940	68.7	3,010	61,600	105%

180 gr Bullet · 25" barrel

COAL: 2.830" • Bullet length: 1.257" • Seat depth: 0.527" • Usable capacity: 69.6 / 80.2 gr H_2O

Powder	STEP 1 · 90%		STEP 2		STEP 3		STEP 4		STEP 5 · LIMIT			
	gr	fps	gr	fps	gr	fps	gr	fps	gr	fps	psi	Fill
Accurate 4350	62.8	2,830	64.5	2,895	66.3	2,965	68.0	3,035	69.8	3,105	64,600	105%
Hodgdon SUPERFORMANCE	64.6	2,820	66.4	2,890	68.2	2,960	70.0	3,030	71.8	3,100	64,900	101%
Winchester StaBALL 6.5	61.7	2,825	63.4	2,890	65.2	2,960	66.9	3,025	68.6	3,095	64,900	99%
Hodgdon Leverevolution	54.8	2,795	56.3	2,860	57.8	2,920	59.4	2,985	60.9	3,045	64,700	84%
Reload Swiss RS60	60.1	2,775	61.8	2,845	63.5	2,910	65.1	2,975	66.8	3,045	64,800	99%
Reload Swiss RS62	63.2	2,760	65.0	2,835	66.7	2,900	68.5	2,975	70.2	3,045	64,800	105%
Norma 204	61.5	2,770	63.2	2,840	64.9	2,905	66.6	2,975	68.3	3,040	64,900	103%
Hodgdon H380	58.5	2,775	60.1	2,835	61.8	2,905	63.4	2,965	65.0	3,030	64,900	99%
Hodgdon H4350	60.8	2,765	62.5	2,830	64.2	2,900	65.8	2,960	67.5	3,030	64,800	98%
IMR 4350	60.7	2,760	62.4	2,825	64.1	2,895	65.7	2,955	67.4	3,025	64,900	104%
Vihtavuori N550	57.7	2,775	59.3	2,835	60.9	2,895	62.5	2,955	64.1	3,020	64,900	97%
Hodgdon H414	59.1	2,745	60.8	2,815	62.4	2,875	64.0	2,940	65.7	3,010	64,800	96%
IMR 4955	63.5	2,725	65.3	2,795	67.0	2,860	68.8	2,935	70.6	3,005	64,800	102%
Winchester 760	59.5	2,745	61.1	2,810	62.8	2,875	64.4	2,940	66.1	3,005	64,800	98%
Norma URP	59.9	2,730	61.5	2,795	63.2	2,865	64.8	2,930	66.5	3,000	61,800	105%
Ramshot Hunter	61.6	2,725	63.3	2,795	65.0	2,860	66.7	2,925	68.4	2,990	65,000	104%
IMR 4007 SSC	59.1	2,715	60.8	2,785	62.4	2,850	64.0	2,910	65.7	2,980	64,900	101%
Hodgdon Varget	53.0	2,715	54.5	2,780	56.0	2,840	57.4	2,895	58.9	2,955	64,800	88%
Accurate 4064	53.9	2,710	55.4	2,770	56.9	2,830	58.4	2,890	59.9	2,950	64,800	95%
Vihtavuori N540	53.1	2,705	54.6	2,760	56.0	2,815	57.5	2,875	59.0	2,930	64,900	90%

200 gr Bullet · 25" barrel

COAL: 2.840" • Bullet length: 1.333" • Seat depth: 0.593" • Usable capacity: 68.5 / 80.2 gr H_2O

Powder	STEP 1 · 90%		STEP 2		STEP 3		STEP 4		STEP 5 · LIMIT			
	gr	fps	gr	fps	gr	fps	gr	fps	gr	fps	psi	Fill
Accurate 4350	60.8	2,705	62.5	2,770	64.2	2,835	65.9	2,905	67.6	2,970	64,900	103%
Hodgdon SUPERFORMANCE	62.6	2,705	64.3	2,770	66.0	2,835	67.8	2,900	69.5	2,970	64,800	99%
Winchester StaBALL 6.5	59.6	2,685	61.3	2,750	62.9	2,810	64.5	2,870	66.2	2,935	64,900	98%
Norma URP	59.0	2,670	60.6	2,735	62.3	2,800	63.9	2,865	65.5	2,930	64,800	105%
Vihtavuori N555	60.2	2,670	61.9	2,735	63.6	2,800	65.2	2,860	66.9	2,925	61,300	105%
Reload Swiss RS62	61.3	2,655	63.0	2,725	64.7	2,790	66.4	2,855	68.1	2,920	64,800	103%
Reload Swiss RS60	58.2	2,660	59.8	2,720	61.5	2,790	63.1	2,850	64.7	2,915	64,800	97%
Norma 204	59.6	2,650	61.3	2,715	62.9	2,780	64.5	2,840	66.2	2,905	65,000	102%
Alliant Reloder 16	57.4	2,645	59.0	2,705	60.6	2,765	62.2	2,825	63.8	2,890	64,900	103%
Hodgdon H4350	58.4	2,635	60.0	2,700	61.7	2,765	63.3	2,825	64.9	2,885	64,800	96%
IMR 4350	58.4	2,630	60.0	2,690	61.7	2,755	63.3	2,820	64.9	2,880	65,000	102%
IMR 4831	60.2	2,615	61.9	2,680	63.6	2,745	65.2	2,810	66.9	2,875	62,700	105%
Winchester 748	54.1	2,635	55.6	2,695	57.1	2,755	58.6	2,810	60.1	2,870	65,000	90%
Hodgdon H414	57.2	2,625	58.8	2,685	60.4	2,745	61.9	2,805	63.5	2,865	65,000	94%
Winchester 760	57.5	2,620	59.1	2,680	60.7	2,740	62.3	2,805	63.9	2,865	64,900	96%
Ramshot Hunter	59.6	2,610	61.3	2,670	62.9	2,730	64.5	2,795	66.2	2,860	65,000	103%
Alliant Reloder 19	60.8	2,590	62.5	2,655	64.2	2,720	65.9	2,785	67.6	2,850	64,300	105%
IMR 4007 SSC	57.2	2,600	58.8	2,660	60.4	2,725	61.9	2,780	63.5	2,845	64,800	99%
Winchester StaBALL Match	53.2	2,605	54.7	2,660	56.2	2,720	57.6	2,775	59.1	2,830	64,800	97%
Shooters World SW4350	58.9	2,565	60.5	2,625	62.2	2,690	63.8	2,750	65.4	2,810	64,900	104%

220 gr Bullet · 25" barrel

COAL: 2.845" • Bullet length: 1.358" • Seat depth: 0.613" • Usable capacity: 68.1 / 80.2 gr H_2O

Powder	STEP 1 · 90%		STEP 2		STEP 3		STEP 4		STEP 5 · LIMIT			
	gr	fps	gr	fps	gr	fps	gr	fps	gr	fps	psi	Fill
Hodgdon SUPERFORMANCE	60.9	2,585	62.6	2,650	64.3	2,710	66.0	2,775	67.7	2,840	64,800	97%
Vihtavuori N555	59.3	2,600	61.0	2,660	62.6	2,720	64.3	2,780	65.9	2,840	64,900	104%
Accurate 4350	59.2	2,590	60.9	2,650	62.5	2,710	64.2	2,775	65.8	2,835	65,000	101%
Alliant Reloder 26	64.1	2,575	65.9	2,640	67.7	2,705	69.4	2,770	71.2	2,835	62,000	105%
Hodgdon Hybrid 100V	57.3	2,555	58.9	2,620	60.5	2,680	62.1	2,740	63.7	2,805	64,700	105%
Norma URP	57.3	2,560	58.9	2,620	60.5	2,685	62.1	2,745	63.7	2,805	65,000	103%
Reload Swiss RS62	59.9	2,555	61.5	2,615	63.2	2,680	64.8	2,740	66.5	2,805	64,900	101%
Winchester StaBALL 6.5	57.8	2,550	59.4	2,605	61.0	2,665	62.6	2,725	64.2	2,780	64,900	95%
Winchester Supreme 780	63.4	2,525	65.2	2,590	66.9	2,650	68.7	2,715	70.4	2,780	64,800	104%
Hodgdon H4831SC	61.6	2,520	63.3	2,580	65.0	2,640	66.7	2,705	68.4	2,770	64,900	101%
IMR 7828SSC	61.9	2,500	63.6	2,560	65.3	2,620	67.1	2,685	68.8	2,750	62,100	105%
Hodgdon H4350	56.5	2,515	58.1	2,570	59.6	2,630	61.2	2,685	62.8	2,745	64,900	93%
Alliant Reloder 16	55.4	2,510	56.9	2,560	58.5	2,620	60.0	2,675	61.5	2,730	64,900	100%
Ramshot Big Game	55.0	2,500	56.5	2,555	58.0	2,610	59.6	2,670	61.1	2,725	64,800	91%
Ramshot Hunter	58.0	2,490	59.6	2,550	61.2	2,610	62.8	2,665	64.4	2,725	64,900	100%
Accurate 2700	55.3	2,495	56.8	2,550	58.3	2,605	59.9	2,665	61.4	2,720	64,800	92%
Hodgdon H414	55.4	2,490	57.0	2,550	58.5	2,605	60.0	2,660	61.6	2,720	64,800	92%
Winchester 760	55.8	2,490	57.3	2,545	58.9	2,605	60.5	2,665	62.0	2,720	64,800	94%
Hodgdon H380	54.3	2,485	55.8	2,540	57.3	2,595	58.8	2,650	60.3	2,705	64,900	94%
IMR 4451	56.0	2,475	57.5	2,530	59.1	2,590	60.7	2,650	62.2	2,705	65,000	95%

8mm Remington Magnum

Remington introduced the 8mm Remington Magnum in 1978 for its Model 700 BDL bolt-action rifle. The cartridge is based on the full-length belted .375 H&H Magnum case. That case is blown out and necked down to accept .323-inch bullets. The result requires a long magnum action. It was designed as a high-velocity cartridge for large game.

Remington's original factory loads used 185-grain bullets at about 3,080 fps and 220-grain bullets at about 2,830 fps. The cartridge is well suited to elk, moose and large bears. Yet it never became very popular. One reason is that the .338 Winchester Magnum had already been established for two decades. The case has been more influential as a parent. Necked down it became the 7mm Shooting Times Westerner (STW). Remington later standardized that cartridge. Necked up it became the .358 Shooting Times Alaskan (STA).

Cartridge specifications	
Bullet Diameter	**0.323" (8.20 mm)**
Max Case Length	**2.850" (72.39 mm)**
Case Trim Length	**2.840" (72.14 mm)**
Max COAL	**3.780" (96.01 mm)**
Primer Pocket	**Large Rifle**
Standard Twist	**1:10"**
Case Capacity	**98.3 gr H_2O**
Max Pressure	**65,000 psi (SAAMI)**

150 gr Bullet · 25" barrel

COAL: 3.507" • Bullet length: 0.980" • Seat depth: 0.323" • Usable capacity: 91.6 / 98.3 gr H_2O

Powder	STEP 1 · 90%		STEP 2		STEP 3		STEP 4		STEP 5 · LIMIT			
	gr	fps	gr	fps	gr	fps	gr	fps	gr	fps	psi	Fill
Accurate 4350	78.8	3,250	81.0	3,330	83.2	3,410	85.3	3,485	87.5	3,565	65,000	100%
Alliant Reloder 26	86.1	3,225	88.5	3,310	90.9	3,395	93.3	3,480	95.7	3,565	64,600	105%
Hodgdon SUPERFORMANCE	80.6	3,230	82.8	3,310	85.1	3,390	87.3	3,470	89.6	3,555	65,000	96%
Vihtavuori N555	79.0	3,210	81.2	3,290	83.4	3,370	85.6	3,450	87.8	3,530	64,900	103%
Winchester StaBALL 6.5	76.7	3,230	78.8	3,305	81.0	3,380	83.1	3,455	85.2	3,530	65,000	94%
Reload Swiss RS62	79.4	3,185	81.6	3,260	83.8	3,340	86.0	3,420	88.2	3,505	65,000	100%
Reload Swiss RS60	75.4	3,190	77.5	3,265	79.6	3,345	81.7	3,420	83.8	3,500	64,900	94%
Hodgdon H4350	77.0	3,185	79.1	3,260	81.3	3,340	83.4	3,415	85.5	3,490	64,900	94%
IMR 4350	76.4	3,170	78.5	3,245	80.7	3,320	82.8	3,395	84.9	3,475	64,900	99%
IMR 4831	78.6	3,150	80.8	3,230	82.9	3,310	85.1	3,390	87.3	3,475	64,800	102%
Alliant Reloder 19	80.4	3,140	82.6	3,220	84.8	3,300	87.1	3,380	89.3	3,465	64,900	104%
Norma MRP	82.3	3,145	84.6	3,225	86.8	3,300	89.1	3,385	91.4	3,465	64,800	104%
Alliant Power Pro 2000-MR	72.0	3,175	74.0	3,245	76.0	3,315	78.0	3,390	80.0	3,460	64,900	92%
Alliant Reloder 22	81.5	3,130	83.8	3,210	86.0	3,290	88.3	3,375	90.5	3,455	62,600	105%
Vihtavuori N160	78.3	3,150	80.5	3,225	82.7	3,300	84.8	3,375	87.0	3,450	65,000	103%
Winchester 760	74.7	3,155	76.8	3,230	78.8	3,300	80.9	3,375	83.0	3,450	64,900	93%
Winchester Supreme 780	84.2	3,105	86.5	3,185	88.8	3,265	91.2	3,350	93.5	3,435	64,900	103%
IMR 7828SSC	83.3	3,100	85.6	3,180	87.9	3,260	90.2	3,345	92.5	3,425	63,000	105%
Vihtavuori N150	67.9	3,120	69.8	3,190	71.7	3,255	73.5	3,320	75.4	3,385	65,000	92%
Hodgdon H4831	80.6	3,055	82.8	3,130	85.1	3,215	87.3	3,290	89.6	3,375	63,900	105%

170 gr Bullet · 25" barrel

COAL: 3.440" • Bullet length: 1.075" • Seat depth: 0.485" • Usable capacity: 88.7 / 98.3 gr H_2O

Powder	STEP 1 · 90%		STEP 2		STEP 3		STEP 4		STEP 5 · LIMIT			
	gr	fps	gr	fps	gr	fps	gr	fps	gr	fps	psi	Fill
Alliant Reloder 26	82.6	3,085	84.9	3,165	87.2	3,240	89.5	3,325	91.8	3,405	64,900	104%
Hodgdon SUPERFORMANCE	77.0	3,065	79.2	3,140	81.3	3,215	83.4	3,290	85.6	3,365	64,900	94%
Vihtavuori N560	80.2	3,040	82.4	3,115	84.7	3,190	86.9	3,260	89.1	3,335	62,100	105%
Alliant Reloder 22	78.9	3,025	81.1	3,100	83.3	3,175	85.5	3,250	87.7	3,330	64,900	105%
Reload Swiss RS62	76.0	3,030	78.1	3,105	80.2	3,180	82.3	3,255	84.4	3,330	64,900	99%
Vihtavuori N555	74.7	3,045	76.8	3,115	78.8	3,185	80.9	3,260	83.0	3,330	64,900	100%
Norma URP	73.2	3,030	75.2	3,100	77.3	3,175	79.3	3,250	81.3	3,325	65,000	101%
IMR 4831	75.3	3,005	77.4	3,080	79.5	3,155	81.6	3,230	83.7	3,305	64,900	101%
Ramshot Hunter	75.2	3,020	77.3	3,090	79.4	3,160	81.5	3,235	83.6	3,305	64,900	100%
Alliant Reloder 19	77.0	3,000	79.1	3,075	81.3	3,150	83.4	3,225	85.5	3,300	64,900	102%
Hodgdon H4350	73.1	3,015	75.1	3,085	77.2	3,160	79.2	3,230	81.2	3,300	64,900	92%
IMR 7828	80.6	2,985	82.8	3,060	85.1	3,140	87.3	3,215	89.6	3,295	64,900	102%
Hodgdon H4831SC	78.3	2,990	80.5	3,065	82.7	3,140	84.8	3,210	87.0	3,290	64,900	99%
IMR 4350	72.5	2,995	74.5	3,060	76.5	3,130	78.6	3,205	80.6	3,275	64,900	97%
Alliant Reloder 16	71.0	3,005	73.0	3,070	75.0	3,140	76.9	3,200	78.9	3,270	65,000	99%
Accurate 3100	77.0	2,935	79.2	3,010	81.3	3,080	83.4	3,155	85.6	3,235	64,900	105%
IMR 4007 SSC	70.9	2,960	72.9	3,030	74.8	3,095	76.8	3,165	78.8	3,235	64,900	95%
Hodgdon H4831	77.5	2,935	79.7	3,010	81.8	3,080	83.9	3,155	86.1	3,230	64,900	104%
Vihtavuori N165	78.1	2,940	80.3	3,010	82.4	3,080	84.6	3,155	86.8	3,225	63,300	105%
Hodgdon H380	68.7	2,955	70.6	3,020	72.5	3,085	74.4	3,150	76.3	3,215	64,900	91%

180 gr Bullet · 25" barrel

COAL: 3.580" • Bullet length: 1.234" • Seat depth: 0.504" • Usable capacity: 88.2 / 98.3 gr H_2O

Powder	STEP 1 · 90%		STEP 2		STEP 3		STEP 4		STEP 5 · LIMIT			
	gr	fps	gr	fps	gr	fps	gr	fps	gr	fps	psi	Fill
Alliant Reloder 26	81.2	3,010	83.5	3,090	85.7	3,165	88.0	3,240	90.2	3,320	64,800	103%
Vihtavuori N560	79.5	2,990	81.7	3,060	83.9	3,130	86.1	3,200	88.3	3,275	64,900	105%
Hodgdon SUPERFORMANCE	75.6	2,985	77.7	3,055	79.8	3,125	81.9	3,200	84.0	3,270	64,800	93%
Accurate 4350	73.6	2,985	75.6	3,050	77.7	3,125	79.8	3,195	81.8	3,265	64,800	97%
Alliant Reloder 23	76.8	2,965	78.9	3,035	81.0	3,105	83.2	3,180	85.3	3,255	62,700	105%
Alliant Reloder 22	77.5	2,950	79.7	3,025	81.8	3,095	83.9	3,165	86.1	3,245	64,800	104%
Reload Swiss RS62	74.6	2,950	76.7	3,025	78.8	3,095	80.8	3,165	82.9	3,240	64,800	98%
Alliant Reloder 19	75.7	2,930	77.8	3,000	79.9	3,075	82.0	3,145	84.1	3,220	65,000	101%
IMR 7828	79.0	2,915	81.2	2,985	83.4	3,060	85.6	3,135	87.8	3,210	64,800	100%
Norma MRP	77.3	2,920	79.5	2,990	81.6	3,060	83.8	3,135	85.9	3,210	65,000	101%
Winchester Supreme 780	79.1	2,905	81.3	2,980	83.5	3,055	85.7	3,130	87.9	3,205	65,000	100%
Hodgdon H4831SC	77.0	2,915	79.1	2,985	81.3	3,060	83.4	3,130	85.5	3,200	64,900	98%
Winchester StaBALL 6.5	71.4	2,935	73.4	3,000	75.3	3,065	77.3	3,130	79.3	3,200	64,900	91%
Hodgdon H4350	71.5	2,925	73.5	2,995	75.5	3,060	77.4	3,125	79.4	3,195	64,900	91%
IMR 4350	70.9	2,900	72.9	2,970	74.8	3,035	76.8	3,100	78.8	3,170	64,900	96%
Alliant Reloder 16	69.3	2,900	71.2	2,965	73.2	3,030	75.1	3,095	77.0	3,160	64,900	97%
Accurate 3100	75.7	2,865	77.8	2,935	79.9	3,005	82.0	3,080	84.1	3,155	64,900	103%
Vihtavuori N165	77.1	2,875	79.3	2,945	81.4	3,015	83.5	3,085	85.7	3,155	64,900	104%
Hodgdon H4831	76.1	2,865	78.2	2,935	80.3	3,005	82.4	3,075	84.5	3,145	64,900	103%
Vihtavuori N170	80.1	2,840	82.3	2,905	84.5	2,970	86.8	3,045	89.0	3,110	61,800	105%

200 gr Bullet · 25" barrel

COAL: 3.580" • Bullet length: 1.311" • Seat depth: 0.581" • Usable capacity: 86.8 / 98.3 gr H_2O

Powder	STEP 1 · 90%		STEP 2		STEP 3		STEP 4		STEP 5 · LIMIT			
	gr	fps	gr	fps	gr	fps	gr	fps	gr	fps	psi	Fill
Alliant Reloder 26	78.7	2,895	80.9	2,965	83.1	3,040	85.2	3,110	87.4	3,185	64,900	101%
Alliant Reloder 23	75.2	2,865	77.3	2,935	79.4	3,005	81.5	3,075	83.6	3,145	64,900	105%
Hodgdon SUPERFORMANCE	73.2	2,855	75.2	2,920	77.3	2,990	79.3	3,055	81.3	3,120	65,000	92%
Accurate 4350	71.1	2,845	73.1	2,910	75.0	2,975	77.0	3,040	79.0	3,110	64,900	95%
Alliant Reloder 22	75.1	2,835	77.2	2,905	79.3	2,970	81.3	3,040	83.4	3,110	64,900	102%
Ramshot Grand	80.5	2,815	82.7	2,885	85.0	2,960	87.2	3,035	89.4	3,110	63,300	105%
Vihtavuori N560	76.1	2,835	78.2	2,900	80.3	2,965	82.5	3,035	84.6	3,105	64,800	102%
Accurate MagPro	80.3	2,795	82.5	2,870	84.8	2,945	87.0	3,020	89.2	3,090	64,100	105%
Alliant Reloder 19	73.4	2,815	75.4	2,885	77.5	2,955	79.5	3,020	81.5	3,090	64,900	100%
IMR 4831	71.9	2,815	73.9	2,880	75.9	2,950	77.9	3,015	79.9	3,085	64,900	99%
IMR 7828	76.2	2,800	78.3	2,865	80.5	2,940	82.6	3,005	84.7	3,075	64,800	98%
Reload Swiss RS60	68.5	2,815	70.4	2,880	72.3	2,945	74.2	3,010	76.1	3,075	65,000	90%
Hodgdon H4831SC	74.5	2,790	76.6	2,860	78.7	2,930	80.7	2,995	82.8	3,065	64,900	96%
Norma MRP	74.7	2,795	76.8	2,860	78.8	2,925	80.9	2,995	83.0	3,065	64,800	99%
Norma 204	70.1	2,795	72.0	2,860	74.0	2,925	76.0	2,990	77.9	3,055	64,900	94%
Hodgdon H4350	68.8	2,790	70.7	2,850	72.6	2,915	74.5	2,980	76.4	3,040	65,000	89%
Accurate 3100	73.3	2,755	75.3	2,820	77.3	2,890	79.4	2,960	81.4	3,025	65,000	102%
Hodgdon H4831	73.5	2,745	75.5	2,810	77.6	2,880	79.7	2,945	81.7	3,015	64,900	101%
Vihtavuori N165	74.3	2,745	76.3	2,810	78.4	2,875	80.5	2,940	82.5	3,005	65,000	102%
Alliant Reloder 16	66.5	2,750	68.3	2,810	70.2	2,870	72.1	2,930	73.9	2,990	64,900	94%

220 gr Bullet · 25" barrel

COAL: 3.600" • Bullet length: 1.358" • Seat depth: 0.608" • Usable capacity: 86.3 / 98.3 gr H_2O

Powder	STEP 1 · 90%		STEP 2		STEP 3		STEP 4		STEP 5 · LIMIT			
	gr	fps	gr	fps	gr	fps	gr	fps	gr	fps	psi	Fill
Alliant Reloder 26	76.5	2,770	78.6	2,835	80.8	2,905	82.9	2,975	85.0	3,045	64,900	99%
Ramshot Grand	79.4	2,725	81.6	2,795	83.8	2,865	86.0	2,935	88.2	3,005	65,000	104%
Vihtavuori N565	77.3	2,730	79.5	2,795	81.6	2,860	83.8	2,930	85.9	2,995	64,800	105%
Accurate MagPro	78.9	2,710	81.1	2,775	83.3	2,845	85.5	2,920	87.7	2,990	65,000	104%
Alliant Reloder 23	73.0	2,730	75.0	2,795	77.0	2,860	79.1	2,925	81.1	2,990	64,900	102%
Ramshot Magnum	81.0	2,700	83.3	2,770	85.5	2,840	87.8	2,910	90.0	2,980	64,900	105%
Alliant Reloder 22	72.9	2,705	74.9	2,770	77.0	2,835	79.0	2,900	81.0	2,965	64,800	100%
Reload Swiss RS76	80.1	2,690	82.3	2,760	84.5	2,825	86.8	2,895	89.0	2,965	64,900	104%
Reload Swiss RS62	70.4	2,705	72.4	2,770	74.3	2,830	76.3	2,895	78.2	2,960	64,900	94%
Alliant Reloder 19	71.5	2,700	73.5	2,765	75.5	2,830	77.4	2,890	79.4	2,955	64,900	98%
Reload Swiss RS70	72.2	2,695	74.2	2,760	76.2	2,825	78.2	2,890	80.2	2,955	64,900	94%
IMR 4831	70.1	2,695	72.0	2,755	74.0	2,820	76.0	2,885	77.9	2,950	64,800	97%
Accurate 4350	68.8	2,700	70.7	2,760	72.6	2,820	74.5	2,880	76.4	2,945	64,800	92%
IMR 7828	73.9	2,680	76.0	2,745	78.0	2,805	80.0	2,870	82.1	2,935	64,900	96%
Winchester StaBALL HD	80.1	2,660	82.3	2,725	84.5	2,790	86.8	2,860	89.0	2,930	63,500	105%
Ramshot Hunter	69.2	2,660	71.1	2,720	73.1	2,780	75.0	2,845	76.9	2,905	64,900	95%
Norma 204	68.1	2,660	70.0	2,720	71.9	2,780	73.8	2,840	75.7	2,900	64,800	92%
Vihtavuori N555	66.3	2,650	68.2	2,710	70.0	2,770	71.8	2,825	73.7	2,885	64,900	92%
IMR 4350	65.9	2,620	67.7	2,675	69.6	2,735	71.4	2,795	73.2	2,850	64,900	91%
Vihtavuori N165	71.6	2,600	73.6	2,665	75.6	2,725	77.6	2,785	79.6	2,845	64,900	99%

8mm-06

The 8mm-06 is an American wildcat that became popular after World War II. At that time large numbers of German Model 98 Mauser rifles chambered for the 8x57mm Mauser entered the United States. Yet 8x57mm ammunition was not readily available. Gunsmiths rechambered these rifles to accept .30-06 Springfield cases necked up to 8mm. Owners could then use plentiful and inexpensive surplus .30-06 brass without rebarreling.

The 8mm-06 is similar in dimensions and performance to the European 8x64mm S. It gives somewhat higher velocities than the .30-06 Springfield. Beyond moderate ranges the lower ballistic coefficients of 8mm bullets reduce that advantage. It suits deer and similar game at ordinary hunting distances. For a time it was popular in the United States, Australia and New Zealand. Today it has a small following. A rechambered rifle cannot be distinguished from an unaltered one without careful examination. Firing 8x57mm ammunition in an 8mm-06 chamber is dangerous because the case can stretch and rupture.

Cartridge specifications	
Bullet Diameter	**0.323" (8.20 mm)**
Max Case Length	**2.494" (63.35 mm)**
Case Trim Length	**2.484" (63.09 mm)**
Max COAL	**3.350" (85.09 mm)**
Primer Pocket	**Large Rifle**
Standard Twist	**1:10"**
Case Capacity	**69.4 gr H_2O**
Max Pressure	**60,000 psi (SAAMI)**

150 gr Bullet · 25" barrel

COAL: 3.151" • Bullet length: 0.980" • Seat depth: 0.323" • Usable capacity: 62.8 / 69.5 gr H_2O

Powder	STEP 1 · 90%		STEP 2		STEP 3		STEP 4		STEP 5 · LIMIT			
	gr	fps	gr	fps	gr	fps	gr	fps	gr	fps	psi	Fill
Hodgdon Leverevolution	53.5	2,945	55.0	3,015	56.5	3,080	57.9	3,145	59.4	3,210	59,900	90%
Vihtavuori N540	53.1	2,900	54.6	2,965	56.0	3,025	57.5	3,090	59.0	3,155	60,000	100%
Reload Swiss RS52	53.5	2,885	55.0	2,950	56.5	3,020	57.9	3,080	59.4	3,150	60,000	99%
Winchester StaBALL 6.5	58.8	2,870	60.4	2,940	62.0	3,010	63.7	3,080	65.3	3,150	58,500	105%
Hodgdon BL-C(2)	53.8	2,875	55.3	2,940	56.8	3,010	58.3	3,075	59.8	3,145	59,900	96%
Hodgdon CFE 223	54.6	2,880	56.1	2,945	57.7	3,015	59.2	3,080	60.7	3,145	59,800	99%
Ramshot Big Game	56.9	2,870	58.5	2,940	60.0	3,005	61.6	3,075	63.2	3,145	59,800	103%
Alliant Reloder 15	53.4	2,880	54.9	2,950	56.3	3,010	57.8	3,075	59.3	3,140	59,900	101%
IMR 4895	51.5	2,860	52.9	2,920	54.4	2,990	55.8	3,050	57.2	3,115	59,800	94%
Winchester StaBALL Match	52.4	2,840	53.9	2,905	55.3	2,965	56.8	3,035	58.2	3,095	60,000	104%
Hodgdon Varget	51.5	2,835	52.9	2,900	54.4	2,965	55.8	3,030	57.2	3,090	59,800	95%
Hodgdon H4895	50.0	2,840	51.4	2,900	52.8	2,965	54.1	3,025	55.5	3,085	59,800	92%
IMR 4064	51.6	2,830	53.0	2,895	54.5	2,960	55.9	3,020	57.3	3,085	60,000	98%
Ramshot TAC	49.6	2,830	51.0	2,895	52.4	2,955	53.7	3,015	55.1	3,080	59,900	93%
Reload Swiss RS50	53.1	2,820	54.6	2,885	56.0	2,950	57.5	3,015	59.0	3,080	59,900	99%
Shooters World The Creed	51.8	2,805	53.3	2,870	54.7	2,935	56.1	2,995	57.6	3,065	59,900	95%
Winchester 760	56.9	2,790	58.5	2,860	60.0	2,925	61.6	2,990	63.2	3,065	59,800	104%
Vihtavuori N135	49.2	2,820	50.6	2,880	52.0	2,945	53.3	3,000	54.7	3,060	59,900	95%
Accurate 2520	50.2	2,815	51.6	2,875	53.0	2,935	54.4	2,995	55.8	3,055	59,700	91%
Hodgdon SUPERFORMANCE	60.6	2,750	62.3	2,820	64.0	2,895	65.6	2,965	67.3	3,040	57,600	105%

200 gr Bullet · 25" barrel

COAL: 3.220" • Bullet length: 1.263" • Seat depth: 0.537" • Usable capacity: 58.8 / 69.5 gr H_2O

Powder	STEP 1 · 90%		STEP 2		STEP 3		STEP 4		STEP 5 · LIMIT			
	gr	fps	gr	fps	gr	fps	gr	fps	gr	fps	psi	Fill
Winchester StaBALL 6.5	53.5	2,525	55.0	2,585	56.5	2,645	57.9	2,700	59.4	2,765	59,900	102%
Hodgdon SUPERFORMANCE	55.8	2,500	57.3	2,560	58.9	2,625	60.5	2,695	62.0	2,755	60,000	103%
Hodgdon Leverevolution	47.5	2,505	48.8	2,565	50.1	2,620	51.5	2,675	52.8	2,730	60,000	86%
Hodgdon H4350	52.8	2,480	54.3	2,540	55.8	2,605	57.2	2,660	58.7	2,725	59,800	101%
Ramshot Big Game	51.0	2,485	52.4	2,540	53.9	2,605	55.3	2,660	56.7	2,720	59,800	98%
Vihtavuori N550	50.4	2,500	51.8	2,555	53.2	2,610	54.6	2,665	56.0	2,720	60,000	100%
Accurate 4350	53.1	2,470	54.6	2,535	56.0	2,590	57.5	2,650	59.0	2,715	57,800	105%
Reload Swiss RS60	51.8	2,465	53.2	2,520	54.6	2,580	56.1	2,645	57.5	2,705	59,800	101%
Alliant Power Pro 4000-MR	54.0	2,435	55.5	2,495	57.0	2,555	58.5	2,620	60.0	2,680	60,000	104%
Winchester 760	51.3	2,445	52.7	2,505	54.1	2,560	55.6	2,625	57.0	2,680	59,900	100%
Accurate 2700	50.4	2,440	51.8	2,500	53.2	2,555	54.6	2,615	56.0	2,675	59,800	97%
IMR 4955	54.6	2,415	56.1	2,475	57.7	2,540	59.2	2,600	60.7	2,665	59,900	104%
Alliant Reloder 15	46.6	2,440	47.9	2,495	49.2	2,550	50.5	2,605	51.8	2,655	59,700	94%
Vihtavuori N150	47.0	2,435	48.3	2,490	49.6	2,545	50.9	2,600	52.2	2,655	60,000	100%
Reload Swiss RS62	53.5	2,410	55.0	2,470	56.5	2,530	57.9	2,590	59.4	2,650	57,100	105%
Accurate 4064	46.4	2,420	47.7	2,475	49.0	2,530	50.2	2,580	51.5	2,635	59,900	97%
Vihtavuori N540	46.1	2,425	47.4	2,475	48.7	2,530	49.9	2,580	51.2	2,630	60,000	92%
IMR 4064	45.2	2,405	46.5	2,460	47.7	2,510	49.0	2,565	50.2	2,615	59,800	91%
Shooters World The Creed	45.9	2,400	47.2	2,455	48.5	2,510	49.7	2,560	51.0	2,615	59,800	90%
Hodgdon H4895	43.9	2,395	45.1	2,445	46.3	2,495	47.6	2,550	48.8	2,600	59,800	86%

220 gr Bullet · 25" barrel

COAL: 3.225" • Bullet length: 1.358" • Seat depth: 0.628" • Usable capacity: 57.1 / 69.5 gr H_2O

Powder	STEP 1 · 90%		STEP 2		STEP 3		STEP 4		STEP 5 · LIMIT			
	gr	fps	gr	fps	gr	fps	gr	fps	gr	fps	psi	Fill
Hodgdon SUPERFORMANCE	53.6	2,385	55.1	2,440	56.5	2,500	58.0	2,560	59.5	2,620	60,000	102%
Accurate 4350	51.6	2,375	53.0	2,430	54.5	2,490	55.9	2,545	57.3	2,605	59,900	105%
Winchester StaBALL 6.5	51.1	2,380	52.5	2,435	54.0	2,490	55.4	2,550	56.8	2,605	59,800	100%
Hodgdon H4350	50.3	2,350	51.7	2,405	53.1	2,460	54.5	2,515	55.9	2,575	59,700	99%
Reload Swiss RS60	49.7	2,340	51.1	2,400	52.5	2,455	53.8	2,510	55.2	2,570	59,900	99%
IMR 4350	50.2	2,340	51.6	2,395	53.0	2,450	54.4	2,505	55.8	2,565	59,000	105%
Ramshot Big Game	48.8	2,345	50.1	2,395	51.5	2,450	52.9	2,510	54.2	2,560	59,900	97%
Reload Swiss RS70	53.5	2,325	55.0	2,385	56.5	2,445	57.9	2,500	59.4	2,560	59,900	105%
Alliant Reloder 16	48.6	2,325	50.0	2,380	51.3	2,430	52.6	2,485	54.0	2,540	58,300	105%
Winchester 748	46.2	2,330	47.5	2,385	48.8	2,440	50.0	2,490	51.3	2,540	59,800	92%
Vihtavuori N550	47.5	2,330	48.8	2,380	50.1	2,430	51.5	2,485	52.8	2,535	59,800	97%
Winchester 760	49.1	2,315	50.5	2,370	51.9	2,425	53.2	2,480	54.6	2,535	60,000	98%
Alliant Reloder 17	48.7	2,305	50.1	2,365	51.4	2,420	52.8	2,475	54.1	2,530	59,900	95%
Hodgdon H4831SC	53.6	2,295	55.1	2,355	56.5	2,410	58.0	2,465	59.5	2,530	59,300	105%
Accurate 2700	48.3	2,305	49.6	2,360	51.0	2,415	52.4	2,470	53.7	2,525	60,000	96%
Hodgdon H380	47.6	2,310	48.9	2,360	50.3	2,415	51.6	2,470	52.9	2,520	59,800	98%
IMR 4007 SSC	48.7	2,285	50.1	2,345	51.4	2,395	52.8	2,455	54.1	2,510	59,900	101%
IMR 4451	48.9	2,280	50.3	2,335	51.6	2,390	52.9	2,440	54.3	2,500	60,000	99%
IMR 4320	44.1	2,275	45.3	2,325	46.5	2,375	47.8	2,430	49.0	2,480	59,700	86%
IMR 4064	42.8	2,245	44.0	2,295	45.2	2,345	46.4	2,395	47.6	2,445	59,700	89%

8x57 IRS

The 8x57mm IRS is the rimmed version of the 8x57mm IS (7.92x57mm Mauser) cartridge. It was created in the same period as the rimless version. Germany adopted that rimless round for military service in the early 1900s. The IRS uses the same .323-inch bullet diameter. Its rim was added to give reliable extraction in break-action firearms. These include single-shot rifles, double rifles, drillings and vierlings. The cartridge is standardized by C.I.P. It is loaded to a lower maximum pressure than the rimless 8x57mm IS.

The 8x57mm IRS is widely used in Central Europe for hunting wild boar, red deer and similar game. It is especially common in Germany and Austria. It also has a long record in driven boar hunts. Factory ammunition is produced by European manufacturers. Lapua is one of them and offers a 180-grain load.

Cartridge specifications	
Bullet Diameter	**0.323" (8.20 mm)**
Max Case Length	**2.244" (57.00 mm)**
Case Trim Length	**2.234" (56.75 mm)**
Max COAL	**3.228" (82.00 mm)**
Primer Pocket	**Large Rifle**
Standard Twist	**1:9"**
Case Capacity	**61.7 gr H_2O**
Max Pressure	**3,300 bar / 47,862 psi (C.I.P.)**

180 gr Bullet · 25" barrel

COAL: 3.091" • Bullet length: 1.357" • Seat depth: 0.511" • Usable capacity: 51.8 / 61.7 gr H_2O

Powder	STEP 1 · 90%		STEP 2		STEP 3		STEP 4		STEP 5 · LIMIT			
	gr	fps	gr	fps	gr	fps	gr	fps	gr	fps	psi	Fill
Reload Swiss RS52	45.4	2,460	46.6	2,520	47.9	2,580	49.1	2,635	50.4	2,695	47,700	102%
Hodgdon Leverevolution	43.8	2,440	45.0	2,500	46.3	2,555	47.5	2,610	48.7	2,665	47,700	90%
Winchester StaBALL 6.5	48.5	2,390	49.9	2,450	51.2	2,510	52.5	2,565	53.9	2,625	46,900	105%
Hodgdon CFE 223	44.8	2,390	46.0	2,445	47.3	2,500	48.5	2,555	49.8	2,615	47,700	98%
Ramshot Big Game	46.8	2,390	48.1	2,445	49.4	2,500	50.7	2,560	52.0	2,615	47,800	102%
Vihtavuori N540	43.5	2,405	44.7	2,460	45.9	2,510	47.1	2,565	48.3	2,615	47,700	99%
Alliant Reloder 15	43.6	2,395	44.8	2,445	46.0	2,500	47.2	2,555	48.4	2,610	47,700	100%
Reload Swiss RS50	44.5	2,380	45.7	2,430	47.0	2,490	48.2	2,545	49.4	2,600	47,700	100%
Hodgdon H380	45.9	2,360	47.2	2,420	48.5	2,475	49.7	2,530	51.0	2,590	47,800	105%
Vihtavuori N140	42.8	2,370	44.0	2,420	45.1	2,470	46.3	2,525	47.5	2,580	47,800	94%
Hodgdon Varget	41.9	2,345	43.1	2,400	44.3	2,455	45.4	2,505	46.6	2,560	47,700	94%
Winchester 760	46.7	2,320	48.0	2,380	49.3	2,435	50.6	2,495	51.9	2,550	47,800	103%
Hodgdon SUPERFORMANCE	50.0	2,295	51.4	2,355	52.8	2,420	54.1	2,475	55.5	2,540	46,000	105%
Reload Swiss RS60	47.0	2,300	48.3	2,360	49.6	2,420	50.9	2,475	52.2	2,535	47,900	104%
Norma 202	40.8	2,330	41.9	2,380	43.0	2,430	44.2	2,480	45.3	2,530	47,600	95%
Vihtavuori N135	40.1	2,330	41.2	2,380	42.4	2,430	43.5	2,480	44.6	2,530	47,900	93%
Alliant Power Pro Varmint	41.0	2,320	42.1	2,370	43.3	2,425	44.4	2,475	45.5	2,525	47,700	93%
Norma 203B	41.0	2,315	42.1	2,365	43.3	2,420	44.4	2,475	45.5	2,525	47,800	95%
Shooters World Precision Rifle	41.8	2,310	42.9	2,360	44.1	2,415	45.3	2,475	46.4	2,525	47,700	99%
Shooters World Long Rifle	43.7	2,265	44.9	2,320	46.1	2,370	47.3	2,425	48.5	2,480	47,800	103%

196 gr Bullet · 25" barrel

COAL: 3.059" • Bullet length: 1.138" • Seat depth: 0.323" • Usable capacity: 55.5 / 61.7 gr H_2O

Powder	STEP 1 · 90%		STEP 2		STEP 3		STEP 4		STEP 5 · LIMIT			
	gr	fps	gr	fps	gr	fps	gr	fps	gr	fps	psi	Fill
Reload Swiss RS52	46.4	2,420	47.7	2,475	49.0	2,530	50.3	2,585	51.6	2,645	47,800	98%
Winchester StaBALL 6.5	50.0	2,380	51.4	2,435	52.8	2,490	54.1	2,545	55.5	2,605	47,600	101%
Vihtavuori N550	47.6	2,380	48.9	2,430	50.3	2,490	51.6	2,540	52.9	2,595	47,700	100%
Hodgdon Leverevolution	44.5	2,380	45.7	2,430	47.0	2,490	48.2	2,540	49.4	2,590	47,700	85%
Hodgdon SUPERFORMANCE	52.0	2,335	53.5	2,395	54.9	2,455	56.3	2,510	57.8	2,575	47,600	102%
Accurate 4350	50.1	2,340	51.5	2,395	52.9	2,455	54.3	2,515	55.7	2,570	46,400	105%
Ramshot Big Game	47.7	2,350	49.0	2,400	50.4	2,460	51.7	2,510	53.0	2,565	47,700	97%
Hodgdon CFE 223	45.6	2,335	46.9	2,390	48.2	2,445	49.4	2,495	50.7	2,550	47,700	93%
Norma 204	49.3	2,305	50.7	2,360	52.0	2,415	53.4	2,475	54.8	2,535	47,800	104%
Reload Swiss RS50	45.4	2,325	46.6	2,375	47.9	2,430	49.1	2,480	50.4	2,535	47,700	95%
Reload Swiss RS60	48.2	2,300	49.6	2,360	50.9	2,415	52.3	2,475	53.6	2,530	47,800	99%
Winchester 760	47.9	2,305	49.2	2,355	50.5	2,410	51.9	2,470	53.2	2,525	47,800	99%
Alliant Reloder 15	43.7	2,315	44.9	2,365	46.2	2,420	47.4	2,470	48.6	2,520	47,700	94%
Vihtavuori N150	44.1	2,315	45.3	2,365	46.5	2,415	47.8	2,470	49.0	2,520	47,800	99%
Vihtavuori N540	43.4	2,310	44.6	2,360	45.8	2,410	47.0	2,460	48.2	2,510	47,800	92%
Vihtavuori N140	43.0	2,290	44.2	2,340	45.4	2,395	46.6	2,445	47.8	2,495	47,800	88%
IMR 4955	50.9	2,250	52.3	2,305	53.8	2,370	55.2	2,430	56.6	2,485	47,800	103%
Hodgdon H4831SC	52.0	2,240	53.5	2,300	54.9	2,355	56.3	2,415	57.8	2,475	47,300	105%
Shooters World Precision Rifle	42.4	2,260	43.6	2,310	44.8	2,360	45.9	2,410	47.1	2,460	47,700	94%
Vihtavuori N135	40.1	2,240	41.2	2,285	42.3	2,335	43.4	2,380	44.5	2,425	47,800	87%

220 gr Bullet · 25" barrel

COAL: 3.110" • Bullet length: 1.394" • Seat depth: 0.528" • Usable capacity: 51.5 / 61.7 gr H_2O

Powder	STEP 1 · 90%		STEP 2		STEP 3		STEP 4		STEP 5 · LIMIT			
	gr	fps	gr	fps	gr	fps	gr	fps	gr	fps	psi	Fill
Reload Swiss RS52	43.0	2,235	44.2	2,290	45.4	2,340	46.6	2,390	47.8	2,445	47,800	98%
Winchester StaBALL 6.5	46.4	2,205	47.7	2,260	49.0	2,310	50.3	2,365	51.6	2,415	47,800	101%
Hodgdon SUPERFORMANCE	48.4	2,185	49.8	2,240	51.1	2,295	52.4	2,345	53.8	2,405	47,800	102%
Accurate 4350	46.4	2,175	47.7	2,230	49.0	2,285	50.3	2,335	51.6	2,390	46,300	105%
Hodgdon Leverevolution	41.1	2,190	42.3	2,245	43.4	2,290	44.6	2,345	45.7	2,390	47,700	85%
Vihtavuori N550	43.8	2,190	45.0	2,240	46.3	2,290	47.5	2,340	48.7	2,390	47,700	99%
Hodgdon H4350	45.7	2,170	47.0	2,225	48.3	2,280	49.5	2,330	50.8	2,385	47,700	100%
Ramshot Big Game	44.3	2,175	45.5	2,225	46.8	2,280	48.0	2,330	49.2	2,380	47,800	97%
Norma 204	45.8	2,145	47.1	2,200	48.3	2,245	49.6	2,300	50.9	2,355	47,800	104%
Alliant Reloder 16	43.8	2,145	45.0	2,195	46.3	2,245	47.5	2,295	48.7	2,345	45,400	105%
Reload Swiss RS50	42.0	2,145	43.2	2,195	44.4	2,245	45.5	2,290	46.7	2,340	47,700	95%
Reload Swiss RS70	48.2	2,125	49.5	2,175	50.9	2,235	52.2	2,290	53.5	2,340	47,500	105%
Alliant Reloder 17	43.8	2,115	45.0	2,165	46.3	2,220	47.5	2,275	48.7	2,325	47,700	95%
Alliant Reloder 15	40.2	2,130	41.3	2,180	42.5	2,230	43.6	2,275	44.7	2,320	47,700	93%
Hodgdon H4831SC	48.2	2,090	49.6	2,150	50.9	2,200	52.3	2,255	53.6	2,310	47,100	105%
Vihtavuori N540	39.9	2,120	41.0	2,165	42.1	2,210	43.2	2,255	44.3	2,305	47,800	91%
Vihtavuori N140	39.6	2,105	40.7	2,155	41.8	2,200	42.9	2,245	44.0	2,295	47,800	87%
Shooters World Precision Rifle	39.1	2,080	40.2	2,125	41.3	2,175	42.3	2,215	43.4	2,265	47,700	94%
Shooters World Long Rifle	41.3	2,065	42.4	2,110	43.6	2,160	44.8	2,210	45.9	2,260	47,600	98%
Shooters World SW4350	44.7	2,060	46.0	2,110	47.2	2,160	48.5	2,215	49.7	2,260	46,700	105%

8x57 IS (8mm Mauser)

The German Rifle Testing Commission (Gewehr-Prüfungskommission) designed the 8x57mm cartridge. It was adopted in 1888 with the Gewehr 88 rifle and a round-nose bullet. In 1903 Germany adopted an improved loading called the S Patrone. It used a lighter pointed (spitzer) bullet and a larger groove diameter of about .323 inch. The later version is designated 8x57mm IS. It is also known as the 7.92x57mm Mauser. It was the cartridge of the Gewehr 98 and Karabiner 98k rifles.

Many armed forces used the 8x57mm IS. It also became a widely used hunting cartridge in Europe for deer, wild boar and moose. In the United States SAAMI specifications are deliberately conservative. The concern is the risk of firing the larger-bore ammunition in older rifles with the original narrower bore. American factory ammunition is therefore loaded more mildly than European ammunition. Factory ammunition and components remain widely available on both continents.

Cartridge specifications	
Bullet Diameter	**0.323" (8.20 mm)**
Max Case Length	**2.240" (56.90 mm)**
Case Trim Length	**2.230" (56.65 mm)**
Max COAL	**3.250" (82.55 mm)**
Primer Pocket	**Large Rifle**
Standard Twist	**1:10"**
Case Capacity	**64.0 gr H_2O**
Max Pressure	**35,000 psi (SAAMI)**

150 gr Bullet · 25" barrel

COAL: 2.897" • Bullet length: 0.980" • Seat depth: 0.323" • Usable capacity: 57.4 / 64.0 gr H_2O

Powder	STEP 1 · 90%		STEP 2		STEP 3		STEP 4		STEP 5 · LIMIT			
	gr	fps	gr	fps	gr	fps	gr	fps	gr	fps	psi	Fill
Hodgdon CFE 223	42.9	2,375	44.1	2,430	45.3	2,485	46.5	2,540	47.7	2,595	34,900	85%
Vihtavuori N140	41.0	2,360	42.1	2,415	43.3	2,470	44.5	2,525	45.6	2,575	35,000	81%
Vihtavuori N550	44.0	2,365	45.2	2,420	46.5	2,475	47.7	2,525	48.9	2,575	34,900	90%
Hodgdon H380	44.1	2,335	45.3	2,390	46.5	2,440	47.8	2,500	49.0	2,550	34,900	91%
Reload Swiss RS52	41.0	2,325	42.1	2,380	43.3	2,435	44.5	2,490	45.6	2,540	35,000	84%
Vihtavuori N540	40.0	2,340	41.1	2,390	42.2	2,440	43.3	2,485	44.4	2,535	34,900	82%
Alliant Reloder 16	44.6	2,290	45.9	2,350	47.1	2,400	48.4	2,455	49.6	2,510	35,000	96%
Alliant Reloder 15	39.7	2,280	40.8	2,335	41.9	2,385	43.0	2,435	44.1	2,485	34,900	82%
Ramshot Big Game	42.8	2,270	44.0	2,325	45.2	2,375	46.4	2,430	47.6	2,485	35,000	85%
Vihtavuori N560	51.8	2,245	53.3	2,305	54.7	2,360	56.1	2,415	57.6	2,475	34,200	105%
Alliant Power Pro 2000-MR	41.8	2,260	42.9	2,310	44.1	2,365	45.3	2,420	46.4	2,470	34,900	85%
Vihtavuori N150	40.0	2,270	41.1	2,320	42.2	2,370	43.3	2,420	44.4	2,470	34,900	87%
Winchester StaBALL Match	39.0	2,250	40.1	2,300	41.1	2,350	42.2	2,400	43.3	2,450	34,900	85%
Accurate 4064	39.1	2,240	40.2	2,295	41.3	2,345	42.3	2,390	43.4	2,445	34,900	84%
Reload Swiss RS50	39.7	2,240	40.8	2,295	41.9	2,345	43.0	2,395	44.1	2,445	35,000	81%
Accurate 2700	42.5	2,225	43.7	2,280	44.9	2,335	46.0	2,385	47.2	2,440	34,900	84%
Accurate 4350	45.6	2,205	46.9	2,265	48.2	2,320	49.4	2,375	50.7	2,430	34,900	92%
Hodgdon H414	42.7	2,195	43.9	2,250	45.0	2,300	46.2	2,355	47.4	2,405	34,900	84%
Vihtavuori N160	45.7	2,170	47.0	2,225	48.3	2,280	49.5	2,330	50.8	2,390	34,900	96%
Winchester StaBALL 6.5	42.4	2,170	43.6	2,225	44.8	2,280	45.9	2,330	47.1	2,380	34,900	83%

170 gr Bullet · 25" barrel

COAL: 2.825" • Bullet length: 1.028" • Seat depth: 0.443" • Usable capacity: 55.4 / 64.0 gr H_2O

Powder	STEP 1 · 90%		STEP 2		STEP 3		STEP 4		STEP 5 · LIMIT			
	gr	fps	gr	fps	gr	fps	gr	fps	gr	fps	psi	Fill
Hodgdon CFE 223	40.7	2,230	41.8	2,280	43.0	2,335	44.1	2,380	45.2	2,430	35,000	83%
Vihtavuori N550	41.2	2,210	42.4	2,260	43.5	2,310	44.6	2,355	45.8	2,405	34,900	87%
Hodgdon H380	41.8	2,200	42.9	2,250	44.1	2,300	45.3	2,355	46.4	2,400	35,000	89%
Vihtavuori N560	49.8	2,180	51.2	2,235	52.5	2,285	53.9	2,345	55.3	2,400	35,000	104%
Reload Swiss RS52	38.9	2,185	40.0	2,235	41.0	2,285	42.1	2,335	43.2	2,385	34,900	82%
Alliant Reloder 16	41.9	2,160	43.1	2,210	44.3	2,260	45.4	2,310	46.6	2,360	35,000	93%
Ramshot Big Game	40.6	2,135	41.7	2,185	42.9	2,240	44.0	2,285	45.1	2,335	34,900	83%
Accurate 4350	43.4	2,110	44.6	2,165	45.8	2,215	47.0	2,270	48.2	2,320	34,900	91%
Alliant Reloder 23	46.0	2,110	47.3	2,165	48.5	2,215	49.8	2,265	51.1	2,320	34,900	100%
Vihtavuori N150	37.6	2,125	38.6	2,170	39.7	2,220	40.8	2,270	41.8	2,315	35,000	85%
Vihtavuori N170	50.2	2,100	51.6	2,150	53.0	2,200	54.4	2,255	55.8	2,305	33,100	105%
Hodgdon SUPERFORMANCE	44.6	2,070	45.9	2,130	47.1	2,180	48.4	2,235	49.6	2,285	35,000	88%
Ramshot Hunter	43.3	2,080	44.5	2,130	45.7	2,180	46.9	2,230	48.1	2,280	34,900	92%
Vihtavuori N555	44.5	2,080	45.7	2,130	47.0	2,180	48.2	2,230	49.4	2,280	34,900	96%
Hodgdon H414	40.5	2,070	41.6	2,125	42.8	2,175	43.9	2,225	45.0	2,275	34,900	83%
Norma 204	42.2	2,070	43.4	2,120	44.5	2,170	45.7	2,220	46.9	2,275	35,000	89%
Vihtavuori N160	43.3	2,070	44.5	2,120	45.7	2,170	46.9	2,220	48.1	2,270	34,900	94%
Winchester 760	40.7	2,070	41.8	2,120	43.0	2,175	44.1	2,225	45.2	2,270	34,900	84%
Winchester StaBALL 6.5	40.2	2,050	41.3	2,100	42.5	2,150	43.6	2,200	44.7	2,250	34,900	81%
IMR 4350	41.0	2,025	42.1	2,075	43.3	2,125	44.5	2,175	45.6	2,225	34,800	88%

180 gr Bullet · 25" barrel

COAL: 2.960" • Bullet length: 1.262" • Seat depth: 0.542" • Usable capacity: 53.3 / 64.0 gr H_2O

Powder	STEP 1 · 90%		STEP 2		STEP 3		STEP 4		STEP 5 · LIMIT			
	gr	fps	gr	fps	gr	fps	gr	fps	gr	fps	psi	Fill
Hodgdon CFE 223	39.1	2,130	40.2	2,180	41.3	2,230	42.3	2,275	43.4	2,325	35,000	83%
Vihtavuori N560	47.8	2,105	49.1	2,155	50.5	2,210	51.8	2,265	53.1	2,315	34,900	104%
Hodgdon H380	40.1	2,105	41.2	2,155	42.3	2,205	43.4	2,250	44.5	2,300	34,900	89%
Vihtavuori N550	39.4	2,110	40.5	2,160	41.6	2,205	42.7	2,250	43.8	2,300	34,900	86%
Reload Swiss RS52	37.4	2,090	38.4	2,140	39.5	2,190	40.5	2,235	41.5	2,285	34,900	82%
Alliant Reloder 16	40.1	2,070	41.2	2,115	42.4	2,165	43.5	2,215	44.6	2,260	35,000	93%
Accurate 4350	41.8	2,035	42.9	2,085	44.1	2,135	45.3	2,190	46.4	2,235	35,000	91%
Alliant Reloder 23	44.3	2,035	45.5	2,085	46.8	2,135	48.0	2,185	49.2	2,235	34,900	100%
Ramshot Big Game	39.0	2,040	40.1	2,095	41.1	2,140	42.2	2,185	43.3	2,235	34,900	83%
Vihtavuori N170	48.3	2,025	49.6	2,070	51.0	2,125	52.4	2,175	53.7	2,225	33,300	105%
Vihtavuori N150	36.0	2,025	37.0	2,075	38.0	2,120	39.0	2,165	40.0	2,210	35,000	84%
Hodgdon SUPERFORMANCE	42.9	1,995	44.1	2,050	45.3	2,100	46.5	2,150	47.7	2,205	34,900	88%
Vihtavuori N555	42.7	2,010	43.9	2,060	45.0	2,105	46.2	2,155	47.4	2,205	34,900	96%
Ramshot Hunter	41.7	2,000	42.9	2,050	44.0	2,100	45.1	2,145	46.3	2,195	35,000	92%
Hodgdon H414	39.0	1,990	40.1	2,040	41.1	2,090	42.2	2,135	43.3	2,185	35,000	83%
Vihtavuori N160	41.6	1,990	42.8	2,040	43.9	2,085	45.1	2,135	46.2	2,185	34,900	94%
Winchester StaBALL 6.5	38.7	1,965	39.8	2,015	40.9	2,065	41.9	2,110	43.0	2,160	35,000	81%
Vihtavuori N165	44.6	1,955	45.8	2,005	47.0	2,050	48.3	2,105	49.5	2,150	34,900	100%
Hodgdon Hybrid 100V	39.2	1,945	40.3	2,000	41.4	2,045	42.5	2,095	43.6	2,145	34,900	92%
IMR 4350	39.4	1,950	40.5	2,000	41.6	2,050	42.7	2,095	43.8	2,145	34,900	88%

200 gr Bullet · 25" barrel

COAL: 2.970" • Bullet length: 1.276" • Seat depth: 0.546" • Usable capacity: 53.2 / 64.0 gr H_2O

Powder	STEP 1 · 90%		STEP 2		STEP 3		STEP 4		STEP 5 · LIMIT			
	gr	fps	gr	fps	gr	fps	gr	fps	gr	fps	psi	Fill
Vihtavuori N560	46.4	2,045	47.7	2,095	49.0	2,145	50.3	2,195	51.6	2,245	35,000	101%
Hodgdon CFE 223	37.8	2,020	38.8	2,065	39.9	2,115	41.0	2,165	42.0	2,210	34,900	80%
Hodgdon H380	38.8	2,010	39.9	2,060	41.0	2,105	42.0	2,150	43.1	2,195	34,900	86%
Vihtavuori N170	47.6	1,985	48.9	2,030	50.3	2,085	51.6	2,130	52.9	2,175	34,900	103%
Alliant Reloder 23	43.2	1,975	44.4	2,020	45.6	2,070	46.8	2,120	48.0	2,165	34,900	98%
Vihtavuori N550	37.5	1,990	38.5	2,030	39.6	2,075	40.7	2,125	41.7	2,165	34,900	82%
Accurate 4350	40.6	1,970	41.7	2,015	42.9	2,065	44.0	2,115	45.1	2,160	34,900	89%
Alliant Reloder 26	45.3	1,960	46.5	2,005	47.8	2,055	49.0	2,105	50.3	2,155	34,900	95%
Vihtavuori N555	41.4	1,965	42.5	2,010	43.7	2,060	44.9	2,105	46.0	2,150	35,000	93%
Ramshot Big Game	37.9	1,955	39.0	2,005	40.0	2,045	41.0	2,090	42.1	2,140	35,000	81%
Hodgdon H4350	39.4	1,935	40.5	1,985	41.6	2,030	42.7	2,080	43.8	2,125	34,900	83%
Ramshot Hunter	40.6	1,930	41.7	1,975	42.9	2,025	44.0	2,070	45.1	2,115	34,900	90%
Vihtavuori N160	40.3	1,920	41.4	1,965	42.5	2,010	43.7	2,060	44.8	2,105	34,800	91%
Hodgdon H414	37.9	1,910	39.0	1,960	40.0	2,005	41.0	2,050	42.1	2,100	34,900	81%
Vihtavuori N165	43.4	1,905	44.6	1,955	45.8	2,000	47.0	2,045	48.2	2,095	35,000	97%
Vihtavuori N150	34.6	1,920	35.5	1,965	36.5	2,010	37.5	2,050	38.4	2,090	35,000	81%
Alliant Reloder 22	42.7	1,890	43.9	1,940	45.0	1,985	46.2	2,030	47.4	2,080	35,000	95%
Norma MRP	42.5	1,890	43.7	1,940	44.9	1,990	46.0	2,030	47.2	2,080	34,900	92%
Reload Swiss RS76	47.2	1,880	48.5	1,925	49.8	1,975	51.1	2,025	52.4	2,075	34,900	99%
IMR 4350	38.2	1,885	39.3	1,935	40.3	1,975	41.4	2,025	42.4	2,065	34,900	86%

220 gr Bullet · 25" barrel

COAL: 2.970" • Bullet length: 1.358" • Seat depth: 0.628" • Usable capacity: 51.7 / 64.0 gr H_2O

Powder	STEP 1 · 90%		STEP 2		STEP 3		STEP 4		STEP 5 · LIMIT			
	gr	fps	gr	fps	gr	fps	gr	fps	gr	fps	psi	Fill
Vihtavuori N560	44.1	1,940	45.3	1,985	46.5	2,030	47.8	2,080	49.0	2,125	34,900	99%
Alliant Reloder 23	41.4	1,875	42.5	1,920	43.7	1,970	44.9	2,015	46.0	2,060	35,000	97%
Alliant Reloder 26	43.4	1,870	44.6	1,920	45.8	1,965	47.0	2,010	48.2	2,060	34,900	94%
Hodgdon H380	36.9	1,885	37.9	1,925	39.0	1,975	40.0	2,015	41.0	2,060	34,900	84%
Vihtavuori N170	45.1	1,870	46.4	1,915	47.6	1,960	48.9	2,005	50.1	2,050	34,900	101%
Accurate 4350	38.8	1,870	39.9	1,915	41.0	1,960	42.0	2,000	43.1	2,045	34,900	87%
Vihtavuori N555	39.2	1,870	40.3	1,915	41.4	1,960	42.5	2,000	43.6	2,045	34,900	91%
Hodgdon H4350	37.4	1,830	38.5	1,875	39.5	1,920	40.5	1,960	41.6	2,010	34,900	81%
Alliant Reloder 22	40.8	1,805	41.9	1,850	43.0	1,895	44.2	1,945	45.3	1,990	34,900	93%
Ramshot Grand	44.6	1,795	45.9	1,845	47.1	1,890	48.4	1,940	49.6	1,985	35,000	98%
Vihtavuori N160	38.4	1,815	39.5	1,860	40.5	1,900	41.6	1,945	42.7	1,985	35,000	90%
Vihtavuori N165	41.3	1,810	42.4	1,850	43.6	1,895	44.8	1,945	45.9	1,985	34,900	95%
Vihtavuori N565	45.4	1,800	46.6	1,845	47.9	1,890	49.1	1,935	50.4	1,985	35,000	102%
IMR 7828SSC	41.7	1,800	42.9	1,845	44.0	1,890	45.1	1,935	46.3	1,980	34,900	93%
Norma MRP	40.6	1,800	41.7	1,845	42.9	1,890	44.0	1,935	45.1	1,980	34,900	91%
Reload Swiss RS76	45.3	1,795	46.5	1,840	47.8	1,890	49.0	1,935	50.3	1,980	35,000	98%
Winchester 760	36.3	1,795	37.3	1,840	38.3	1,885	39.3	1,930	40.3	1,970	34,900	80%
Alliant Reloder 19	39.2	1,770	40.3	1,815	41.4	1,865	42.5	1,910	43.6	1,955	34,900	90%
IMR 4350	36.3	1,780	37.3	1,825	38.3	1,865	39.3	1,910	40.3	1,950	34,900	84%
Shooters World SW4350	37.3	1,760	38.3	1,800	39.3	1,840	40.4	1,885	41.4	1,930	34,900	87%

33 Nosler

Nosler introduced the 33 Nosler in early 2017. It was the fourth cartridge in the company's family of beltless rebated-rim magnums after the 26, 28 and 30 Nosler. Like those cartridges it uses a case derived from the .300 Remington Ultra Magnum. That case in turn traces back to the .404 Jeffery. All four share an overall cartridge length of 3.340 inches. As a result they fit standard-length actions rather than requiring a magnum-length action. The cartridge is standardized by SAAMI.

Nosler's factory loads include a 225-grain AccuBond at about 3,025 fps and a 265-grain AccuBond Long Range at about 2,775 fps. This performance exceeds that of the .338 Winchester Magnum. In a lighter rifle it approaches the .338 Lapua Magnum. The cartridge is intended for elk, moose and other large game at extended ranges. Nosler supplies ammunition, brass and bullets as well as rifles chambered for it.

Cartridge specifications	
Bullet Diameter	**0.338" (8.59 mm)**
Max Case Length	**2.460" (62.48 mm)**
Case Trim Length	**2.450" (62.23 mm)**
Max COAL	**3.340" (84.84 mm)**
Primer Pocket	**Large Rifle**
Standard Twist	**1:10"**
Case Capacity	**92.9 gr H_2O**
Max Pressure	**65,000 psi (SAAMI)**

180 gr Bullet · 25" barrel

COAL: 3.340" • Bullet length: 1.234" • Seat depth: 0.354" • Usable capacity: 85.4 / 92.9 gr H_2O

Powder	STEP 1 · 90%		STEP 2		STEP 3		STEP 4		STEP 5 · LIMIT			
	gr	fps	gr	fps	gr	fps	gr	fps	gr	fps	psi	Fill
Accurate 4350	76.4	3,060	78.5	3,135	80.7	3,210	82.8	3,285	84.9	3,360	65,000	104%
Hodgdon SUPERFORMANCE	78.2	3,045	80.4	3,120	82.6	3,195	84.7	3,270	86.9	3,350	64,900	100%
Winchester StaBALL 6.5	74.4	3,055	76.5	3,125	78.6	3,195	80.6	3,265	82.7	3,335	64,900	98%
Hodgdon H4350	75.3	3,020	77.4	3,090	79.5	3,165	81.6	3,240	83.7	3,315	65,000	99%
IMR 4350	75.0	3,020	77.1	3,090	79.2	3,165	81.2	3,235	83.3	3,310	64,800	105%
Alliant Reloder 16	72.7	3,015	74.7	3,085	76.8	3,155	78.8	3,225	80.8	3,295	64,600	105%
Reload Swiss RS60	73.1	3,000	75.1	3,075	77.2	3,150	79.2	3,220	81.2	3,295	64,900	98%
Norma 204	74.3	3,000	76.4	3,070	78.4	3,140	80.5	3,215	82.6	3,290	64,800	102%
Ramshot Big Game	71.4	3,010	73.4	3,080	75.3	3,145	77.3	3,215	79.3	3,285	64,800	95%
Winchester 760	72.3	2,975	74.3	3,045	76.3	3,115	78.3	3,185	80.3	3,255	64,900	97%
Alliant Reloder 17	72.1	2,965	74.1	3,035	76.1	3,105	78.1	3,180	80.1	3,250	64,800	94%
Hodgdon H414	71.5	2,970	73.5	3,035	75.5	3,105	77.4	3,175	79.4	3,245	65,000	95%
Alliant Reloder 15	66.0	2,970	67.8	3,030	69.7	3,100	71.5	3,160	73.3	3,225	64,900	92%
IMR 4831	75.2	2,925	77.3	3,000	79.3	3,075	81.4	3,150	83.5	3,225	62,100	105%
IMR 4451	72.5	2,935	74.5	3,005	76.5	3,075	78.6	3,150	80.6	3,220	64,900	98%
Shooters World SW4350	73.7	2,910	75.8	2,980	77.8	3,045	79.9	3,120	81.9	3,190	64,800	104%
Winchester Supreme 780	80.2	2,885	82.4	2,960	84.7	3,035	86.9	3,115	89.1	3,190	62,700	105%
Reload Swiss RS50	66.6	2,935	68.4	2,995	70.3	3,060	72.2	3,125	74.0	3,185	65,000	91%
IMR 7828	80.2	2,870	82.4	2,950	84.7	3,025	86.9	3,105	89.1	3,180	63,800	105%
Shooters World Long Rifle	68.2	2,900	70.1	2,965	72.0	3,035	73.9	3,100	75.8	3,165	64,900	97%

200 gr Bullet · 25" barrel

COAL: 3.340" • Bullet length: 1.383" • Seat depth: 0.503" • Usable capacity: 82.0 / 92.9 gr H_2O

Powder	STEP 1 · 90%		STEP 2		STEP 3		STEP 4		STEP 5 · LIMIT			
	gr	fps	gr	fps	gr	fps	gr	fps	gr	fps	psi	Fill
Accurate 4350	72.8	2,910	74.8	2,975	76.8	3,045	78.9	3,120	80.9	3,190	64,900	103%
Hodgdon SUPERFORMANCE	74.6	2,895	76.7	2,970	78.8	3,040	80.8	3,110	82.9	3,185	64,900	99%
Winchester StaBALL 6.5	70.8	2,880	72.8	2,950	74.8	3,015	76.7	3,080	78.7	3,150	64,900	97%
Hodgdon H4350	71.5	2,865	73.5	2,935	75.5	3,005	77.4	3,070	79.4	3,140	65,000	98%
Vihtavuori N555	72.2	2,865	74.2	2,935	76.2	3,000	78.2	3,070	80.2	3,140	62,000	105%
IMR 4350	71.2	2,865	73.2	2,930	75.2	3,000	77.1	3,065	79.1	3,135	64,800	103%
Reload Swiss RS62	73.4	2,850	75.4	2,920	77.5	2,995	79.5	3,065	81.5	3,135	64,900	103%
Norma URP	70.7	2,845	72.7	2,920	74.6	2,985	76.5	3,055	78.5	3,125	64,300	105%
Reload Swiss RS70	75.1	2,835	77.2	2,905	79.3	2,980	81.3	3,050	83.4	3,125	64,800	102%
Norma 204	70.9	2,845	72.9	2,915	74.8	2,980	76.8	3,050	78.8	3,120	64,800	101%
Alliant Reloder 17	68.8	2,820	70.7	2,885	72.6	2,955	74.5	3,020	76.4	3,090	64,900	93%
Hodgdon H4831SC	75.6	2,805	77.7	2,875	79.8	2,945	81.9	3,020	84.0	3,090	64,800	103%
Alliant Power Pro 2000-MR	66.5	2,830	68.3	2,895	70.2	2,960	72.1	3,025	73.9	3,085	64,900	95%
Accurate 2700	67.9	2,825	69.8	2,890	71.7	2,955	73.5	3,015	75.4	3,080	64,900	94%
IMR 4955	73.4	2,795	75.5	2,870	77.5	2,935	79.5	3,005	81.6	3,080	65,000	100%
Alliant Reloder 19	73.0	2,775	75.0	2,845	77.0	2,915	79.1	2,990	81.1	3,060	62,100	105%
IMR 4451	69.1	2,790	71.0	2,855	72.9	2,920	74.9	2,990	76.8	3,055	64,900	97%
Vihtavuori N160	71.4	2,790	73.4	2,855	75.3	2,920	77.3	2,985	79.3	3,055	63,100	105%
Vihtavuori N550	65.7	2,810	67.5	2,865	69.3	2,925	71.2	2,990	73.0	3,050	64,900	93%
Alliant Reloder 15	62.3	2,785	64.0	2,845	65.8	2,905	67.5	2,965	69.2	3,020	64,900	90%

210 gr Bullet · 25" barrel

COAL: 3.300" • Bullet length: 1.237" • Seat depth: 0.397" • Usable capacity: 84.5 / 92.9 gr H_2O

Powder	STEP 1 · 90%		STEP 2		STEP 3		STEP 4		STEP 5 · LIMIT			
	gr	fps	gr	fps	gr	fps	gr	fps	gr	fps	psi	Fill
Hodgdon SUPERFORMANCE	75.1	2,855	77.2	2,925	79.3	2,995	81.3	3,065	83.4	3,135	64,900	97%
Accurate 4350	73.2	2,860	75.2	2,925	77.3	2,995	79.3	3,065	81.3	3,130	64,900	101%
Alliant Reloder 26	79.6	2,840	81.8	2,910	84.0	2,985	86.2	3,055	88.4	3,130	62,500	105%
Vihtavuori N555	73.2	2,855	75.2	2,920	77.3	2,990	79.3	3,060	81.3	3,125	65,000	103%
Norma URP	71.3	2,820	73.3	2,890	75.3	2,955	77.2	3,025	79.2	3,095	64,900	103%
Reload Swiss RS62	73.9	2,815	76.0	2,885	78.0	2,955	80.0	3,020	82.1	3,095	64,800	101%
IMR 4831	73.7	2,805	75.8	2,875	77.8	2,945	79.9	3,015	81.9	3,085	65,000	104%
Reload Swiss RS70	75.7	2,805	77.8	2,875	79.9	2,945	82.0	3,015	84.1	3,085	64,800	100%
Hodgdon H4350	71.6	2,815	73.6	2,885	75.5	2,945	77.5	3,015	79.5	3,080	64,800	95%
IMR 4350	71.4	2,810	73.4	2,880	75.3	2,940	77.3	3,005	79.3	3,075	65,000	101%
Winchester StaBALL 6.5	70.9	2,820	72.9	2,885	74.8	2,945	76.8	3,010	78.8	3,075	64,900	94%
Norma MRP	76.7	2,785	78.8	2,855	81.0	2,925	83.1	2,995	85.2	3,065	65,000	105%
Winchester Supreme 780	78.1	2,775	80.3	2,845	82.4	2,915	84.6	2,985	86.8	3,060	64,900	103%
IMR 4955	74.1	2,770	76.1	2,835	78.2	2,905	80.3	2,975	82.3	3,045	64,900	98%
IMR 7828	77.0	2,740	79.2	2,810	81.3	2,875	83.4	2,945	85.6	3,020	64,900	102%
Ramshot Big Game	67.9	2,775	69.8	2,835	71.7	2,900	73.5	2,960	75.4	3,020	64,900	91%
IMR 7828SSC	76.8	2,740	78.9	2,805	81.0	2,875	83.2	2,945	85.3	3,015	61,500	105%
Hodgdon H414	68.2	2,750	70.1	2,815	72.0	2,880	73.9	2,940	75.8	3,005	64,900	91%
IMR 4451	69.6	2,750	71.5	2,810	73.4	2,875	75.4	2,940	77.3	3,005	64,800	95%
Shooters World SW4350	70.8	2,715	72.8	2,780	74.8	2,840	76.7	2,905	78.7	2,970	64,900	101%

225 gr Bullet · 25" barrel

COAL: 3.340" • Bullet length: 1.439" • Seat depth: 0.559" • Usable capacity: 80.8 / 92.9 gr H_2O

Powder	STEP 1 · 90%		STEP 2		STEP 3		STEP 4		STEP 5 · LIMIT			
	gr	fps	gr	fps	gr	fps	gr	fps	gr	fps	psi	Fill
Hodgdon SUPERFORMANCE	71.9	2,745	73.9	2,815	75.9	2,880	77.9	2,945	79.9	3,015	64,900	97%
Accurate 4350	70.0	2,745	72.0	2,815	73.9	2,875	75.8	2,940	77.8	3,010	65,000	101%
Alliant Reloder 26	76.0	2,730	78.1	2,800	80.2	2,870	82.3	2,935	84.4	3,010	62,000	105%
Vihtavuori N555	69.8	2,745	71.8	2,810	73.7	2,875	75.6	2,935	77.6	3,005	64,900	103%
Norma URP	68.1	2,715	70.0	2,780	71.9	2,845	73.8	2,910	75.7	2,975	64,900	103%
Reload Swiss RS62	70.7	2,705	72.7	2,775	74.7	2,840	76.6	2,905	78.6	2,975	64,800	101%
IMR 4831	70.6	2,700	72.5	2,765	74.5	2,835	76.5	2,905	78.4	2,970	64,900	104%
Reload Swiss RS70	72.5	2,700	74.5	2,765	76.5	2,835	78.5	2,900	80.5	2,970	64,900	101%
Alliant Reloder 19	71.6	2,690	73.6	2,755	75.6	2,820	77.6	2,890	79.6	2,960	64,900	105%
Reload Swiss RS60	67.1	2,705	69.0	2,770	70.8	2,830	72.7	2,895	74.6	2,960	64,900	95%
Norma MRP	73.4	2,680	75.4	2,745	77.5	2,815	79.5	2,880	81.5	2,945	65,000	105%
Hodgdon H4831SC	73.0	2,670	75.0	2,735	77.0	2,800	79.1	2,870	81.1	2,935	64,800	101%
IMR 4955	70.9	2,665	72.9	2,730	74.8	2,795	76.8	2,860	78.8	2,930	65,000	98%
Alliant Reloder 17	66.3	2,670	68.2	2,735	70.0	2,795	71.8	2,855	73.7	2,920	64,900	92%
IMR 7828	73.6	2,640	75.6	2,705	77.7	2,775	79.8	2,840	81.8	2,910	64,900	102%
Alliant Reloder 16	65.7	2,665	67.5	2,725	69.3	2,785	71.2	2,845	73.0	2,905	64,900	100%
IMR 7828SSC	73.4	2,640	75.4	2,705	77.5	2,770	79.5	2,835	81.5	2,900	61,400	105%
Ramshot Big Game	64.9	2,660	66.7	2,715	68.5	2,775	70.3	2,835	72.1	2,895	65,000	91%
Vihtavuori N160	69.0	2,645	70.9	2,705	72.8	2,770	74.8	2,835	76.7	2,895	64,900	103%
Winchester 760	66.1	2,655	67.9	2,710	69.8	2,775	71.6	2,835	73.4	2,895	64,900	93%

250 gr Bullet · 25" barrel

COAL: 3.340" • Bullet length: 1.559" • Seat depth: 0.679" • Usable capacity: 78.2 / 92.9 gr H_2O

Powder	STEP 1 · 90%		STEP 2		STEP 3		STEP 4		STEP 5 · LIMIT			
	gr	fps	gr	fps	gr	fps	gr	fps	gr	fps	psi	Fill
Alliant Reloder 26	73.5	2,625	75.5	2,685	77.6	2,755	79.7	2,825	81.7	2,890	64,200	105%
Hodgdon SUPERFORMANCE	68.7	2,600	70.6	2,660	72.5	2,720	74.4	2,785	76.3	2,845	64,900	95%
Accurate 4350	66.8	2,595	68.7	2,655	70.5	2,715	72.3	2,775	74.2	2,835	65,000	99%
Reload Swiss RS62	67.7	2,570	69.6	2,635	71.5	2,695	73.3	2,755	75.2	2,820	64,800	100%
Vihtavuori N555	65.9	2,585	67.7	2,640	69.6	2,705	71.4	2,760	73.2	2,820	65,000	100%
IMR 4831	67.6	2,565	69.5	2,630	71.3	2,690	73.2	2,750	75.1	2,815	64,900	103%
Norma URP	64.9	2,575	66.7	2,635	68.5	2,695	70.3	2,755	72.1	2,815	64,800	101%
Alliant Reloder 19	68.6	2,560	70.5	2,620	72.4	2,685	74.3	2,745	76.2	2,810	64,900	103%
Winchester Supreme 780	71.5	2,550	73.5	2,610	75.5	2,675	77.4	2,735	79.4	2,805	64,900	102%
Alliant Reloder 22	69.6	2,550	71.5	2,615	73.4	2,675	75.4	2,740	77.3	2,800	63,000	105%
Vihtavuori N560	70.7	2,560	72.7	2,625	74.6	2,680	76.5	2,740	78.5	2,800	61,400	105%
IMR 7828SSC	71.0	2,540	73.0	2,605	75.0	2,665	76.9	2,730	78.9	2,795	64,200	105%
Hodgdon H4831SC	69.8	2,535	71.8	2,600	73.7	2,660	75.6	2,720	77.6	2,785	64,900	100%
Hodgdon H4350	64.8	2,545	66.6	2,605	68.4	2,665	70.2	2,720	72.0	2,780	64,800	93%
Norma 204	65.3	2,535	67.1	2,595	68.9	2,650	70.8	2,715	72.6	2,775	64,800	98%
IMR 4350	64.6	2,535	66.4	2,595	68.2	2,650	70.0	2,710	71.8	2,770	64,900	99%
IMR 7828	70.0	2,505	72.0	2,570	73.9	2,630	75.8	2,690	77.8	2,755	64,900	100%
Accurate 3100	68.0	2,490	69.9	2,550	71.8	2,610	73.7	2,675	75.6	2,735	64,000	105%
Vihtavuori N160	65.5	2,485	67.3	2,545	69.2	2,605	71.0	2,660	72.8	2,720	64,800	101%
Vihtavuori N165	68.9	2,475	70.8	2,535	72.7	2,595	74.6	2,650	76.5	2,710	62,700	105%

265 gr Bullet · 25" barrel

COAL: 3.340" • Bullet length: 1.680" • Seat depth: 0.800" • Usable capacity: 75.6 / 92.9 gr H_2O

Powder	STEP 1 · 90%		STEP 2		STEP 3		STEP 4		STEP 5 · LIMIT			
	gr	fps	gr	fps	gr	fps	gr	fps	gr	fps	psi	Fill
Alliant Reloder 26	71.1	2,540	73.1	2,605	75.0	2,665	77.0	2,730	79.0	2,795	64,700	105%
Hodgdon SUPERFORMANCE	66.2	2,505	68.0	2,560	69.9	2,620	71.8	2,685	73.6	2,745	64,900	95%
Accurate 4350	64.3	2,495	66.1	2,550	67.8	2,605	69.6	2,665	71.4	2,725	64,800	99%
Reload Swiss RS62	65.3	2,480	67.1	2,540	68.9	2,595	70.8	2,660	72.6	2,720	64,900	100%
IMR 4831	65.3	2,475	67.1	2,535	68.9	2,595	70.7	2,655	72.5	2,715	65,000	103%
Norma URP	62.6	2,485	64.3	2,540	66.0	2,600	67.8	2,660	69.5	2,715	65,000	101%
Reload Swiss RS70	66.8	2,470	68.7	2,530	70.5	2,590	72.3	2,650	74.2	2,710	64,800	99%
Vihtavuori N555	63.2	2,485	65.0	2,540	66.7	2,595	68.5	2,655	70.2	2,710	64,900	100%
Vihtavuori N560	68.3	2,475	70.2	2,530	72.1	2,590	74.0	2,650	75.9	2,705	62,400	105%
Norma MRP	67.5	2,450	69.4	2,510	71.3	2,570	73.1	2,625	75.0	2,690	64,900	103%
Hodgdon H4831SC	67.3	2,445	69.2	2,505	71.0	2,560	72.9	2,620	74.8	2,685	64,800	100%
Hodgdon H4350	62.3	2,450	64.0	2,505	65.8	2,560	67.5	2,615	69.2	2,675	64,900	92%
IMR 4955	65.3	2,435	67.1	2,495	68.9	2,550	70.8	2,615	72.6	2,675	64,800	97%
IMR 4350	62.1	2,435	63.8	2,490	65.5	2,545	67.3	2,605	69.0	2,660	64,800	98%
IMR 7828	67.4	2,420	69.3	2,480	71.2	2,540	73.0	2,595	74.9	2,655	65,000	100%
Hodgdon H4831	66.5	2,410	68.3	2,470	70.2	2,530	72.1	2,590	73.9	2,650	63,900	105%
IMR 4451	61.1	2,390	62.8	2,445	64.5	2,500	66.2	2,560	67.9	2,615	64,800	93%
Vihtavuori N165	66.5	2,390	68.3	2,445	70.2	2,500	72.1	2,560	73.9	2,615	63,500	105%
Vihtavuori N160	63.0	2,390	64.8	2,445	66.5	2,500	68.3	2,555	70.0	2,610	64,900	101%
Alliant Reloder 16	59.7	2,395	61.4	2,450	63.0	2,500	64.7	2,555	66.3	2,605	64,800	97%

300 gr Bullet · 25" barrel

COAL: 3.340" • Bullet length: 1.750" • Seat depth: 0.870" • Usable capacity: 73.2 / 92.9 gr H_2O

Powder	STEP 1 · 90%		STEP 2		STEP 3		STEP 4		STEP 5 · LIMIT			
	gr	fps	gr	fps	gr	fps	gr	fps	gr	fps	psi	Fill
Alliant Reloder 26	67.7	2,395	69.6	2,450	71.5	2,510	73.3	2,570	75.2	2,630	64,900	103%
Hodgdon SUPERFORMANCE	62.9	2,345	64.7	2,400	66.4	2,455	68.2	2,510	69.9	2,565	65,000	93%
Alliant Reloder 22	64.4	2,335	66.2	2,390	68.0	2,445	69.8	2,500	71.6	2,560	64,900	104%
IMR 4831	62.2	2,325	63.9	2,380	65.7	2,440	67.4	2,495	69.1	2,550	65,000	101%
Reload Swiss RS62	62.2	2,330	63.9	2,385	65.7	2,440	67.4	2,495	69.1	2,550	64,900	98%
Alliant Reloder 19	62.9	2,325	64.7	2,380	66.4	2,435	68.2	2,490	69.9	2,545	64,800	101%
Alliant Reloder 23	63.7	2,320	65.5	2,375	67.3	2,435	69.0	2,485	70.8	2,545	61,700	105%
Accurate 4350	60.8	2,325	62.5	2,375	64.2	2,430	65.9	2,485	67.6	2,540	64,900	97%
Vihtavuori N560	65.1	2,325	66.9	2,380	68.7	2,435	70.5	2,485	72.3	2,540	64,900	103%
Winchester Supreme 780	65.4	2,315	67.2	2,370	69.1	2,430	70.9	2,485	72.7	2,540	65,000	100%
IMR 7828SSC	64.9	2,305	66.7	2,360	68.5	2,415	70.3	2,470	72.1	2,530	64,900	102%
Hodgdon H4831SC	64.0	2,295	65.8	2,350	67.5	2,400	69.3	2,460	71.1	2,515	64,700	98%
Norma MRP	64.1	2,295	65.9	2,350	67.7	2,405	69.4	2,460	71.2	2,515	64,900	101%
IMR 4955	62.2	2,290	63.9	2,345	65.7	2,400	67.4	2,455	69.1	2,510	64,900	95%
Vihtavuori N555	59.0	2,305	60.6	2,355	62.3	2,405	63.9	2,455	65.6	2,510	64,800	96%
Ramshot Hunter	61.2	2,290	62.9	2,340	64.6	2,395	66.3	2,450	68.0	2,500	64,800	99%
Accurate 3100	62.6	2,270	64.3	2,325	66.0	2,375	67.8	2,435	69.5	2,490	64,900	103%
Hodgdon H4350	58.7	2,280	60.3	2,330	62.0	2,385	63.6	2,435	65.2	2,485	64,800	90%
IMR 4350	58.5	2,265	60.1	2,315	61.8	2,365	63.4	2,420	65.0	2,470	64,800	95%
Vihtavuori N160	59.4	2,220	61.0	2,270	62.7	2,320	64.3	2,370	66.0	2,425	64,900	98%

338 ARC

Hornady introduced the 338 Advanced Rifle Cartridge (ARC) in late 2024. It is a .338-caliber cartridge for AR-15-size rifles. Like the 6mm ARC it is based on the 6.5 Grendel case. Here the case is necked up to accept .338-inch bullets. Converting an AR-15 to the cartridge requires a new barrel, a 6.5 Grendel-type bolt and compatible magazines. SAAMI accepted the 338 ARC in January 2025.

The 338 ARC was designed primarily as a subsonic cartridge for use with suppressors. A supersonic load serves for general use. Hornady's initial loads were a 307-grain SUB-X bullet at 1,050 fps and a 175-grain hollow-point bullet at 2,075 fps. Both figures are from a 16-inch barrel. The cartridge is intended for medium game such as deer at moderate ranges and for suppressed target shooting. It competes with the 300 AAC Blackout in AR-15-size rifles. Unlike the Blackout it uses heavier bullets of larger diameter.

Cartridge specifications	
Bullet Diameter	**0.338" (8.59 mm)**
Max Case Length	**1.300" (33.02 mm)**
Case Trim Length	**1.290" (32.77 mm)**
Max COAL	**2.260" (57.40 mm)**
Primer Pocket	**Small Rifle**
Standard Twist	**1:8"**
Case Capacity	**33.2 gr H_2O**
Max Pressure	**52,000 psi (SAAMI)**

200 gr Bullet · 25" barrel

COAL: 2.150" • Bullet length: 1.316" • Seat depth: 0.466" • Usable capacity: 23.2 / 33.2 gr H_2O

Powder	STEP 1 · 90%		STEP 2		STEP 3		STEP 4		STEP 5 · LIMIT			
	gr	fps	gr	fps	gr	fps	gr	fps	gr	fps	psi	Fill
Norma R123	17.9	1,790	18.4	1,835	18.9	1,875	19.4	1,920	19.9	1,960	51,500	93%
Shooters World SBR-SOCOM	19.3	1,760	19.8	1,800	20.4	1,850	20.9	1,890	21.4	1,925	51,500	95%
Accurate 1680	21.2	1,720	21.8	1,765	22.4	1,810	23.0	1,850	23.6	1,895	51,500	105%
Alliant Power Pro 300-MP	17.9	1,715	18.4	1,755	18.9	1,795	19.4	1,835	19.9	1,875	51,500	95%
Alliant Reloder 7	20.6	1,655	21.2	1,700	21.8	1,745	22.3	1,780	22.9	1,825	51,400	105%
Vihtavuori N120	18.5	1,620	19.0	1,660	19.5	1,700	20.0	1,740	20.5	1,775	52,000	103%
Vihtavuori N110	14.8	1,570	15.2	1,605	15.6	1,640	16.0	1,675	16.4	1,710	51,800	83%
Accurate LT-30	19.9	1,545	20.4	1,580	21.0	1,625	21.6	1,670	22.1	1,705	51,800	96%
Hodgdon H4227	15.1	1,490	15.5	1,525	15.9	1,560	16.4	1,600	16.8	1,635	52,000	83%

225 gr Bullet · 25" barrel

COAL: 2.140" • Bullet length: 1.372" • Seat depth: 0.532" • Usable capacity: 21.6 / 33.2 gr H_2O

Powder	STEP 1 · 90%		STEP 2		STEP 3		STEP 4		STEP 5 · LIMIT			
	gr	fps	gr	fps	gr	fps	gr	fps	gr	fps	psi	Fill
Norma R123	16.6	1,620	17.1	1,665	17.5	1,700	17.9	1,730	18.4	1,775	51,700	92%
Shooters World SBR-SOCOM	17.8	1,585	18.3	1,625	18.8	1,665	19.3	1,705	19.8	1,745	51,600	94%
Accurate 1680	19.7	1,555	20.3	1,600	20.8	1,635	21.3	1,670	21.9	1,715	51,400	104%
Alliant Power Pro 300-MP	16.6	1,545	17.1	1,590	17.5	1,620	17.9	1,655	18.4	1,695	51,600	94%
Alliant Reloder 7	19.1	1,500	19.6	1,535	20.1	1,575	20.7	1,615	21.2	1,655	51,600	104%
Vihtavuori N120	17.0	1,455	17.5	1,490	17.9	1,525	18.4	1,560	18.9	1,600	51,700	101%
Accurate LT-30	18.5	1,400	19.0	1,435	19.5	1,470	20.0	1,510	20.5	1,545	51,900	95%
Vihtavuori N110	13.5	1,395	13.9	1,430	14.3	1,465	14.6	1,495	15.0	1,525	51,500	81%
Hodgdon H4227	13.9	1,335	14.3	1,370	14.7	1,405	15.0	1,430	15.4	1,460	51,800	82%

250 gr Bullet · 25" barrel

COAL: 2.130" • Bullet length: 1.335" • Seat depth: 0.505" • Usable capacity: 22.5 / 33.2 gr H_2O

Powder	STEP 1 · 90%		STEP 2		STEP 3		STEP 4		STEP 5 · LIMIT			
	gr	fps	gr	fps	gr	fps	gr	fps	gr	fps	psi	Fill
Hodgdon CFE BLK	20.6	1,545	21.2	1,585	21.8	1,625	22.3	1,660	22.9	1,700	50,800	105%
Norma R123	16.3	1,540	16.8	1,580	17.2	1,615	17.7	1,655	18.1	1,685	51,600	87%
Shooters World SBR-SOCOM	17.6	1,515	18.1	1,555	18.6	1,590	19.1	1,630	19.6	1,665	51,600	90%
Accurate 1680	19.7	1,500	20.3	1,545	20.8	1,575	21.3	1,610	21.9	1,655	51,500	100%
Alliant Power Pro 1200-R	20.6	1,495	21.2	1,535	21.8	1,580	22.3	1,610	22.9	1,655	51,600	104%
Shooters World AR Plus	21.0	1,465	21.6	1,505	22.1	1,540	22.7	1,580	23.3	1,620	51,700	105%
Alliant Power Pro 300-MP	16.4	1,475	16.8	1,505	17.3	1,545	17.8	1,585	18.2	1,615	51,800	90%
Alliant Reloder 7	19.0	1,450	19.5	1,485	20.1	1,525	20.6	1,560	21.1	1,595	51,900	100%
Hodgdon H4198	18.2	1,430	18.7	1,465	19.2	1,500	19.7	1,535	20.2	1,570	51,900	103%
Accurate 2015	20.3	1,410	20.9	1,450	21.4	1,485	21.9	1,520	22.5	1,560	51,500	104%
Hodgdon H322	20.0	1,410	20.6	1,450	21.1	1,485	21.6	1,520	22.2	1,560	51,200	105%
Vihtavuori N120	16.9	1,395	17.4	1,430	17.9	1,465	18.3	1,495	18.8	1,530	52,000	97%
IMR 4198	17.6	1,395	18.1	1,430	18.6	1,465	19.0	1,490	19.5	1,525	51,600	104%
Accurate LT-30	18.4	1,355	18.9	1,385	19.4	1,420	19.9	1,455	20.4	1,490	51,600	91%

270 gr Bullet · 25" barrel

COAL: 2.250" • Bullet length: 1.720" • Seat depth: 0.770" • Usable capacity: 16.6 / 33.2 gr H_2O

Powder	STEP 1 · 90%		STEP 2		STEP 3		STEP 4		STEP 5 · LIMIT			
	gr	fps	gr	fps	gr	fps	gr	fps	gr	fps	psi	Fill
Norma R123	13.2	1,300	13.6	1,340	13.9	1,365	14.3	1,400	14.7	1,435	51,300	96%
Shooters World SBR-SOCOM	14.3	1,280	14.7	1,315	15.1	1,350	15.5	1,380	15.9	1,415	51,800	99%
Alliant Power Pro 300-MP	13.3	1,245	13.7	1,280	14.1	1,315	14.4	1,340	14.8	1,375	51,300	99%
Reload Swiss RS36	14.2	1,210	14.6	1,245	15.0	1,275	15.4	1,310	15.8	1,340	50,900	105%
Accurate No. 11FS	12.2	1,180	12.5	1,205	12.9	1,240	13.3	1,275	13.6	1,305	52,000	83%
Hodgdon H110	12.0	1,160	12.3	1,185	12.7	1,220	13.0	1,245	13.3	1,275	51,700	83%
Hodgdon Lil'Gun	11.0	1,145	11.3	1,170	11.6	1,200	11.9	1,225	12.2	1,250	52,000	83%
Vihtavuori N110	10.8	1,135	11.1	1,160	11.4	1,190	11.7	1,215	12.0	1,240	51,300	85%
Reload Swiss RS30	11.3	1,090	11.6	1,115	11.9	1,140	12.3	1,175	12.6	1,200	51,200	93%
Hodgdon H4227	11.2	1,090	11.5	1,115	11.8	1,140	12.1	1,165	12.4	1,190	51,900	86%

300 gr Bullet · 25" barrel

COAL: 2.250" • Bullet length: 1.785" • Seat depth: 0.835" • Usable capacity: 15.1 / 33.2 gr H_2O

Powder	STEP 1 · 90%		STEP 2		STEP 3		STEP 4		STEP 5 · LIMIT			
	gr	fps	gr	fps	gr	fps	gr	fps	gr	fps	psi	Fill
Norma R123	12.2	1,185	12.5	1,215	12.8	1,240	13.2	1,275	13.5	1,300	51,700	97%
Alliant Power Pro 300-MP	12.2	1,125	12.5	1,150	12.9	1,185	13.3	1,220	13.6	1,245	51,500	100%
Reload Swiss RS36	13.0	1,095	13.3	1,120	13.7	1,150	14.1	1,185	14.4	1,205	50,300	104%
Accurate No. 11FS	11.2	1,065	11.5	1,095	11.8	1,120	12.1	1,145	12.4	1,175	51,600	83%
Vihtavuori N120	12.2	1,040	12.5	1,065	12.9	1,095	13.3	1,130	13.6	1,155	49,800	104%
Hodgdon H110	10.9	1,035	11.2	1,065	11.5	1,090	11.8	1,115	12.1	1,145	51,200	82%
Vihtavuori N110	9.9	1,025	10.2	1,050	10.4	1,070	10.7	1,095	11.0	1,120	51,900	85%
Hodgdon Lil'Gun	9.9	1,015	10.2	1,045	10.4	1,065	10.7	1,090	11.0	1,115	51,200	81%
IMR 4227	11.2	1,005	11.5	1,030	11.8	1,055	12.1	1,080	12.4	1,105	51,900	93%
Reload Swiss RS30	10.4	990	10.7	1,015	10.9	1,030	11.2	1,055	11.5	1,080	51,300	92%
Hodgdon H4227	10.2	975	10.5	1,000	10.8	1,030	11.0	1,045	11.3	1,070	51,700	86%

.338 Federal

Federal Cartridge and Sako introduced the .338 Federal in 2005 or 2006 as a big-game cartridge with moderate recoil for lightweight rifles. It is made by necking the .308 Winchester case up to hold .338-inch bullets. The same approach was used earlier for the .338-08 wildcat. With a case length of 2.01 inches it fits short actions. The cartridge is standardized by SAAMI.

Common factory loads include a 180-grain bullet at about 2,830 fps and a 210-grain Nosler Partition at about 2,630 fps. The cartridge fills the gap between the older .358 Winchester and the larger magnum cartridges. It is used for deer, black bear, elk and similar game at moderate ranges. It can be used in some SR-25-pattern rifles. In these rifles magazine modifications may be needed for reliable feeding. Ammunition is available from Federal and other manufacturers.

Cartridge specifications	
Bullet Diameter	**0.338" (8.59 mm)**
Max Case Length	**2.015" (51.18 mm)**
Case Trim Length	**2.005" (50.93 mm)**
Max COAL	**2.820" (71.63 mm)**
Primer Pocket	**Large Rifle**
Standard Twist	**1:10"**
Case Capacity	**55.5 gr H_2O**
Max Pressure	**62,000 psi (SAAMI)**

185 gr Bullet · 25" barrel

COAL: 2.800" • Bullet length: 1.295" • Seat depth: 0.510" • Usable capacity: 44.5 / 55.5 gr H_2O

Powder	STEP 1 · 90%		STEP 2		STEP 3		STEP 4		STEP 5 · LIMIT			
	gr	fps	gr	fps	gr	fps	gr	fps	gr	fps	psi	Fill
Hodgdon CFE BLK	38.9	2,555	40.0	2,615	41.0	2,665	42.1	2,725	43.2	2,785	61,700	100%
Norma R123	31.2	2,545	32.1	2,600	33.0	2,655	33.8	2,700	34.7	2,755	61,800	85%
Alliant Power Pro 1200-R	39.1	2,515	40.2	2,570	41.3	2,630	42.3	2,680	43.4	2,740	61,900	99%
Norma 200	38.0	2,505	39.0	2,560	40.1	2,620	41.2	2,675	42.2	2,730	61,600	103%
Shooters World AR Plus	39.9	2,490	41.0	2,545	42.1	2,600	43.2	2,660	44.3	2,715	61,900	101%
Shooters World SBR-SOCOM	33.4	2,500	34.3	2,550	35.3	2,610	36.2	2,660	37.1	2,710	61,800	86%
Accurate 2460	41.9	2,470	43.0	2,525	44.2	2,585	45.4	2,645	46.5	2,700	60,100	105%
Hodgdon H322	39.4	2,460	40.5	2,520	41.6	2,575	42.7	2,635	43.8	2,695	61,600	105%
Hodgdon H335	42.0	2,460	43.2	2,520	44.4	2,580	45.5	2,635	46.7	2,695	61,700	104%
Accurate 2230	41.1	2,460	42.3	2,520	43.4	2,575	44.6	2,635	45.7	2,690	61,700	104%
Ramshot X-Terminator	40.5	2,445	41.6	2,500	42.8	2,560	43.9	2,610	45.0	2,665	61,800	102%
Accurate 2015	39.2	2,435	40.3	2,490	41.4	2,545	42.4	2,600	43.5	2,655	62,000	102%
Shooters World The Patriot	40.3	2,425	41.4	2,480	42.5	2,535	43.7	2,595	44.8	2,650	59,600	105%
Accurate 1680	36.2	2,430	37.2	2,485	38.2	2,540	39.2	2,590	40.2	2,645	61,900	93%
Alliant Reloder 7	36.3	2,425	37.3	2,480	38.3	2,535	39.3	2,585	40.3	2,640	61,700	96%
Alliant Reloder 10x	37.2	2,415	38.2	2,470	39.3	2,530	40.3	2,580	41.3	2,635	60,700	105%
Accurate LT-32	38.1	2,410	39.1	2,460	40.2	2,520	41.3	2,575	42.3	2,630	59,900	105%
Alliant Power Pro 300-MP	30.9	2,425	31.8	2,475	32.6	2,525	33.4	2,570	34.3	2,620	61,900	86%
Hodgdon H4198	35.1	2,405	36.1	2,460	37.0	2,510	38.0	2,560	39.0	2,615	61,600	101%
IMR 4198	34.3	2,360	35.3	2,415	36.2	2,460	37.1	2,510	38.1	2,565	61,700	103%

200 gr Bullet · 25" barrel

COAL: 2.800" • Bullet length: 1.264" • Seat depth: 0.479" • Usable capacity: 45.2 / 55.5 gr H_2O

Powder	STEP 1 · 90%		STEP 2		STEP 3		STEP 4		STEP 5 · LIMIT			
	gr	fps	gr	fps	gr	fps	gr	fps	gr	fps	psi	Fill
Hodgdon CFE BLK	38.4	2,450	39.5	2,505	40.5	2,555	41.6	2,615	42.7	2,670	61,600	97%
Reload Swiss RS40	40.1	2,425	41.2	2,480	42.4	2,540	43.5	2,595	44.6	2,650	62,000	105%
Alliant Power Pro 1200-R	38.4	2,410	39.5	2,465	40.5	2,515	41.6	2,570	42.7	2,625	61,700	96%
Norma 200	37.4	2,410	38.5	2,470	39.5	2,520	40.5	2,570	41.6	2,625	61,900	100%
Norma R123	30.6	2,430	31.5	2,480	32.3	2,530	33.1	2,575	34.0	2,625	61,700	82%
Shooters World AR Plus	39.5	2,395	40.6	2,450	41.7	2,505	42.8	2,560	43.9	2,615	61,900	98%
Accurate 2460	41.6	2,390	42.8	2,445	43.9	2,500	45.1	2,555	46.2	2,610	61,900	102%
Accurate 2495	42.4	2,380	43.6	2,435	44.8	2,495	45.9	2,550	47.1	2,610	60,900	105%
Hodgdon H335	41.8	2,390	42.9	2,445	44.1	2,500	45.3	2,560	46.4	2,610	61,800	101%
Shooters World Tactical Rifle	41.5	2,380	42.6	2,430	43.8	2,490	45.0	2,550	46.1	2,605	61,900	105%
Hodgdon H322	39.2	2,385	40.3	2,440	41.4	2,495	42.4	2,545	43.5	2,600	61,700	102%
IMR 3031	40.0	2,375	41.1	2,430	42.2	2,485	43.3	2,540	44.4	2,595	60,000	105%
Vihtavuori N130	37.2	2,385	38.2	2,435	39.3	2,495	40.3	2,545	41.3	2,595	60,700	105%
Shooters World The Patriot	40.4	2,360	41.5	2,415	42.6	2,465	43.8	2,525	44.9	2,580	62,000	103%
Accurate 2230	40.3	2,355	41.4	2,405	42.5	2,460	43.7	2,515	44.8	2,570	61,800	100%
IMR 4320	42.4	2,340	43.6	2,400	44.8	2,460	45.9	2,510	47.1	2,570	58,500	105%
Accurate LT-32	38.3	2,355	39.3	2,405	40.4	2,460	41.5	2,515	42.5	2,565	61,900	104%
Alliant Reloder 10x	37.2	2,355	38.2	2,405	39.3	2,460	40.3	2,515	41.3	2,565	61,900	103%
Ramshot X-Terminator	39.8	2,345	40.9	2,395	42.0	2,450	43.1	2,500	44.2	2,555	62,000	99%
Hodgdon H4198	34.7	2,310	35.7	2,360	36.6	2,410	37.5	2,455	38.5	2,510	61,600	98%

210 gr Bullet · 25" barrel

COAL: 2.820" • Bullet length: 1.352" • Seat depth: 0.547" • Usable capacity: 43.8 / 55.5 gr H_2O

Powder	STEP 1 · 90%		STEP 2		STEP 3		STEP 4		STEP 5 · LIMIT			
	gr	fps	gr	fps	gr	fps	gr	fps	gr	fps	psi	Fill
Hodgdon CFE BLK	37.2	2,360	38.2	2,410	39.3	2,470	40.3	2,520	41.3	2,570	61,700	97%
Reload Swiss RS40	38.8	2,340	39.9	2,395	41.0	2,450	42.0	2,500	43.1	2,555	61,800	105%
Alliant Power Pro 1200-R	37.2	2,325	38.2	2,380	39.3	2,435	40.3	2,485	41.3	2,535	62,000	96%
Norma 200	36.1	2,320	37.1	2,375	38.1	2,425	39.1	2,475	40.1	2,530	61,800	99%
Accurate 2495	41.0	2,295	42.1	2,350	43.3	2,410	44.5	2,470	45.6	2,525	61,100	105%
Norma R123	29.5	2,335	30.3	2,380	31.1	2,430	32.0	2,480	32.8	2,525	61,800	81%
Hodgdon H335	40.4	2,305	41.5	2,355	42.6	2,410	43.8	2,465	44.9	2,520	61,800	101%
Shooters World AR Plus	38.2	2,310	39.3	2,365	40.3	2,415	41.4	2,470	42.4	2,520	61,700	98%
Accurate 2460	40.1	2,300	41.2	2,350	42.4	2,410	43.5	2,460	44.6	2,515	61,900	102%
Shooters World Tactical Rifle	40.1	2,295	41.2	2,350	42.4	2,405	43.5	2,460	44.6	2,515	62,000	105%
Hodgdon H322	37.9	2,295	39.0	2,350	40.0	2,400	41.0	2,455	42.1	2,510	61,900	102%
IMR 3031	38.7	2,295	39.8	2,350	40.9	2,400	41.9	2,450	43.0	2,505	60,300	105%
IMR 4320	41.0	2,260	42.1	2,315	43.3	2,370	44.5	2,430	45.6	2,485	58,500	105%
Shooters World The Patriot	39.0	2,270	40.1	2,325	41.1	2,370	42.2	2,425	43.3	2,480	61,800	103%
Accurate LT-32	37.0	2,265	38.0	2,315	39.0	2,365	40.1	2,425	41.1	2,475	61,900	103%
Accurate 2230	38.9	2,265	40.0	2,315	41.0	2,365	42.1	2,415	43.2	2,470	61,700	100%
Alliant Reloder 10x	35.9	2,265	36.9	2,315	37.9	2,370	38.9	2,420	39.9	2,470	61,800	103%
Ramshot X-Terminator	38.3	2,250	39.4	2,300	40.5	2,355	41.5	2,400	42.6	2,455	61,800	99%
Accurate 1680	34.5	2,240	35.5	2,290	36.4	2,335	37.3	2,380	38.3	2,435	61,800	90%
Alliant Reloder 7	34.5	2,240	35.5	2,290	36.4	2,335	37.3	2,380	38.3	2,435	61,800	93%

225 gr Bullet · 25" barrel

COAL: 2.750" • Bullet length: 1.316" • Seat depth: 0.581" • Usable capacity: 42.9 / 55.5 gr H_2O

Powder	STEP 1 · 90%		STEP 2		STEP 3		STEP 4		STEP 5 · LIMIT			
	gr	fps	gr	fps	gr	fps	gr	fps	gr	fps	psi	Fill
Vihtavuori N530	37.7	2,265	38.8	2,320	39.8	2,370	40.9	2,420	41.9	2,470	58,600	105%
Hodgdon CFE BLK	36.0	2,255	37.0	2,305	38.0	2,355	39.0	2,405	40.0	2,455	61,900	96%
Reload Swiss RS40	37.6	2,240	38.6	2,290	39.7	2,345	40.8	2,400	41.8	2,450	61,800	104%
Accurate 2495	40.1	2,225	41.2	2,280	42.3	2,335	43.4	2,385	44.5	2,440	62,000	104%
Hodgdon H335	39.2	2,210	40.3	2,265	41.4	2,315	42.5	2,365	43.6	2,420	61,900	101%
IMR 3031	37.8	2,215	38.8	2,265	39.9	2,315	41.0	2,370	42.0	2,420	61,700	105%
Alliant Power Pro 1200-R	35.8	2,215	36.8	2,265	37.8	2,315	38.8	2,365	39.8	2,415	61,800	95%
Norma 200	34.8	2,220	35.8	2,270	36.8	2,320	37.7	2,365	38.7	2,415	61,800	98%
Shooters World Tactical Rifle	38.9	2,205	40.0	2,260	41.0	2,310	42.1	2,360	43.2	2,415	61,700	104%
Shooters World AR Plus	37.0	2,210	38.0	2,255	39.0	2,305	40.1	2,360	41.1	2,410	61,700	97%
Hodgdon H322	36.7	2,200	37.7	2,245	38.8	2,300	39.8	2,350	40.8	2,400	61,900	101%
Vihtavuori N130	34.9	2,205	35.9	2,255	36.8	2,300	37.8	2,350	38.8	2,400	62,000	104%
Accurate 2460	38.7	2,195	39.8	2,245	40.9	2,300	41.9	2,345	43.0	2,395	61,800	101%
Accurate 2015	36.5	2,170	37.5	2,215	38.5	2,265	39.6	2,320	40.6	2,370	62,000	98%
Alliant Reloder 10x	34.8	2,170	35.8	2,225	36.8	2,275	37.7	2,320	38.7	2,370	61,900	102%
Shooters World The Patriot	37.7	2,170	38.8	2,220	39.8	2,270	40.9	2,325	41.9	2,370	62,000	102%
Accurate LT-32	35.8	2,170	36.8	2,220	37.8	2,265	38.8	2,315	39.8	2,365	61,800	102%
Accurate 2230	37.4	2,155	38.5	2,205	39.5	2,255	40.5	2,300	41.6	2,350	61,800	98%
Ramshot X-Terminator	36.9	2,145	37.9	2,190	39.0	2,240	40.0	2,290	41.0	2,335	61,600	97%
Alliant Reloder 7	33.3	2,135	34.2	2,180	35.1	2,225	36.1	2,275	37.0	2,320	62,000	92%

250 gr Bullet · 25" barrel

COAL: 2.800" • Bullet length: 1.490" • Seat depth: 0.705" • Usable capacity: 40.3 / 55.5 gr H_2O

Powder	STEP 1 · 90%		STEP 2		STEP 3		STEP 4		STEP 5 · LIMIT			
	gr	fps	gr	fps	gr	fps	gr	fps	gr	fps	psi	Fill
Vihtavuori N530	35.5	2,115	36.5	2,165	37.5	2,215	38.4	2,255	39.4	2,305	60,500	105%
Accurate 2495	37.4	2,060	38.5	2,115	39.5	2,160	40.5	2,210	41.6	2,265	61,900	104%
Reload Swiss RS40	35.2	2,070	36.2	2,120	37.2	2,170	38.1	2,215	39.1	2,265	61,800	103%
Hodgdon CFE BLK	33.6	2,070	34.5	2,115	35.5	2,170	36.4	2,215	37.3	2,260	61,800	95%
IMR 4320	37.8	2,045	38.8	2,095	39.9	2,145	41.0	2,200	42.0	2,250	60,300	105%
Hodgdon H335	36.7	2,045	37.7	2,095	38.8	2,145	39.8	2,195	40.8	2,240	61,900	100%
IMR 3031	35.3	2,050	36.3	2,095	37.3	2,145	38.2	2,190	39.2	2,240	61,800	104%
Shooters World Tactical Rifle	36.4	2,045	37.4	2,095	38.4	2,145	39.4	2,190	40.4	2,240	61,700	103%
Alliant AR-Comp	35.6	2,045	36.6	2,095	37.5	2,135	38.5	2,185	39.5	2,235	60,000	105%
Alliant Power Pro 1200-R	33.3	2,040	34.2	2,085	35.1	2,130	36.1	2,180	37.0	2,225	61,800	94%
Shooters World AR Plus	34.6	2,035	35.5	2,080	36.5	2,130	37.5	2,180	38.4	2,225	61,600	96%
Hodgdon H322	34.3	2,030	35.3	2,080	36.2	2,125	37.1	2,170	38.1	2,220	61,900	100%
Accurate 2460	36.0	2,020	37.0	2,065	38.0	2,115	39.0	2,160	40.0	2,205	61,900	99%
Hodgdon Benchmark	34.6	2,015	35.5	2,060	36.5	2,110	37.5	2,155	38.4	2,200	59,000	105%
Accurate LT-32	33.5	2,005	34.4	2,050	35.4	2,100	36.3	2,145	37.2	2,190	61,800	102%
Alliant Reloder 10x	32.5	2,005	33.4	2,050	34.3	2,100	35.2	2,145	36.1	2,190	61,700	101%
Accurate 2015	34.1	2,000	35.0	2,045	36.0	2,090	37.0	2,140	37.9	2,185	61,600	98%
Shooters World The Patriot	35.1	1,995	36.1	2,045	37.0	2,085	38.0	2,135	39.0	2,180	61,900	101%
Accurate 2230	34.7	1,975	35.7	2,025	36.7	2,070	37.6	2,110	38.6	2,160	61,700	97%
Ramshot X-Terminator	34.3	1,970	35.3	2,015	36.2	2,060	37.1	2,100	38.1	2,150	61,900	96%

.338 Lapua Magnum

The .338 Lapua Magnum originated in 1982 as a long-range sniper cartridge for U.S. military use. Research Armament Industries in the United States took part in its early development. The wildcat was first formed from the .378 Weatherby Magnum case and then from the .416 Rigby case necked down to .338 caliber. Early brass-making problems led the project to Lapua of Finland. When the original developer withdrew Lapua redesigned the case with a strengthened web and sidewall. Lapua completed the design while working with Sako and Accuracy International. The cartridge was registered with the C.I.P. in 1989.

Bullets typically weigh 200 to 300 grains. Loads with 250-grain bullets leave the muzzle at roughly 2,900 to 3,000 fps. Military and police forces in many NATO and allied countries use it as a long-range sniper cartridge. It saw combat use in Afghanistan and Iraq. Civilian shooters favor it for long-range target shooting and also use it for hunting large game. Factory ammunition and brass are available from Lapua and other manufacturers.

Cartridge specifications	
Bullet Diameter	**0.338" (8.59 mm)**
Max Case Length	**2.724" (69.19 mm)**
Case Trim Length	**2.714" (68.94 mm)**
Max COAL	**3.681" (93.50 mm)**
Primer Pocket	**Large Rifle**
Standard Twist	**1:10"**
Case Capacity	**113.8 gr H_2O**
Max Pressure	**65,000 psi (SAAMI)**

185 gr Bullet · 25" barrel

COAL: 3.530" • Bullet length: 1.295" • Seat depth: 0.490" • Usable capacity: 103.2 / 113.8 gr H_2O

Powder	STEP 1 · 90%		STEP 2		STEP 3		STEP 4		STEP 5 · LIMIT			
	gr	fps	gr	fps	gr	fps	gr	fps	gr	fps	psi	Fill
Alliant Reloder 23	89.2	3,135	91.7	3,210	94.2	3,285	96.6	3,360	99.1	3,435	64,900	104%
Ramshot Grand	95.7	3,095	98.3	3,175	101.0	3,255	103.7	3,340	106.3	3,420	63,600	105%
Accurate 4350	84.1	3,125	86.4	3,195	88.8	3,265	91.1	3,340	93.4	3,410	64,900	95%
Alliant Reloder 26	91.6	3,100	94.1	3,175	96.7	3,255	99.3	3,335	101.8	3,410	64,900	99%
Hodgdon SUPERFORMANCE	86.0	3,115	88.4	3,190	90.8	3,260	93.2	3,335	95.6	3,410	64,800	91%
Vihtavuori N560	90.4	3,110	92.9	3,185	95.4	3,255	97.9	3,330	100.4	3,405	65,000	102%
Hodgdon Hybrid 100V	82.0	3,105	84.3	3,175	86.5	3,250	88.8	3,320	91.1	3,395	64,900	99%
IMR 4350	83.2	3,100	85.5	3,170	87.8	3,240	90.1	3,310	92.4	3,385	64,900	96%
Alliant Reloder 22	88.5	3,070	91.0	3,145	93.4	3,220	95.8	3,295	98.3	3,375	64,900	101%
IMR 4831	84.4	3,055	86.8	3,130	89.1	3,200	91.5	3,280	93.8	3,350	65,000	98%
Norma 204	82.4	3,070	84.7	3,140	87.0	3,210	89.2	3,280	91.5	3,350	64,900	93%
Ramshot Hunter	84.2	3,065	86.5	3,135	88.9	3,205	91.3	3,280	93.6	3,350	64,800	96%
Reload Swiss RS76	95.7	3,030	98.3	3,105	101.0	3,180	103.7	3,260	106.3	3,340	64,900	104%
Winchester Supreme 780	90.1	3,035	92.6	3,110	95.1	3,185	97.6	3,260	100.1	3,340	65,000	98%
Hodgdon H4350	81.8	3,050	84.1	3,120	86.3	3,190	88.6	3,260	90.9	3,330	65,000	89%
Norma MRP	87.8	3,025	90.2	3,100	92.7	3,175	95.1	3,245	97.5	3,320	64,900	98%
Hodgdon H4831	88.1	3,015	90.5	3,085	93.0	3,165	95.5	3,240	97.9	3,315	64,900	102%
IMR 7828	89.5	3,005	92.0	3,080	94.5	3,155	96.9	3,230	99.4	3,310	65,000	97%
Accurate 3100	86.7	2,995	89.1	3,065	91.5	3,140	93.9	3,215	96.3	3,290	65,000	101%
Ramshot Magnum	96.0	2,965	98.7	3,040	101.3	3,120	104.0	3,200	106.7	3,280	64,900	104%

200 gr Bullet · 25" barrel

COAL: 3.525" • Bullet length: 1.316" • Seat depth: 0.515" • Usable capacity: 102.6 / 113.8 gr H_2O

Powder	STEP 1 · 90%		STEP 2		STEP 3		STEP 4		STEP 5 · LIMIT			
	gr	fps	gr	fps	gr	fps	gr	fps	gr	fps	psi	Fill
Ramshot Grand	94.7	3,030	97.3	3,105	100.0	3,185	102.6	3,265	105.2	3,345	64,800	104%
Alliant Reloder 23	87.3	3,030	89.7	3,105	92.2	3,175	94.6	3,250	97.0	3,320	64,900	103%
Alliant Reloder 26	89.8	3,010	92.3	3,085	94.8	3,160	97.3	3,235	99.8	3,310	65,000	98%
Hodgdon SUPERFORMANCE	84.2	3,010	86.5	3,080	88.9	3,155	91.3	3,225	93.6	3,295	65,000	89%
Accurate 4350	82.2	3,015	84.5	3,085	86.8	3,150	89.0	3,220	91.3	3,290	65,000	93%
Accurate MagPro	93.6	2,970	96.2	3,045	98.8	3,125	101.4	3,205	104.0	3,285	64,900	103%
Hodgdon Hybrid 100V	80.5	3,005	82.7	3,075	85.0	3,145	87.2	3,215	89.4	3,285	64,900	98%
Alliant Reloder 22	86.7	2,980	89.1	3,055	91.5	3,125	93.9	3,200	96.3	3,270	64,900	100%
IMR 4831	82.8	2,965	85.1	3,035	87.4	3,105	89.7	3,175	92.0	3,245	64,800	96%
IMR 7828SSC	88.3	2,955	90.8	3,025	93.2	3,095	95.6	3,170	98.1	3,245	64,900	99%
Alliant Reloder 19	84.2	2,950	86.5	3,020	88.9	3,095	91.3	3,165	93.6	3,240	64,900	97%
Reload Swiss RS76	94.0	2,940	96.6	3,015	99.2	3,090	101.8	3,165	104.4	3,240	65,000	103%
Hodgdon Retumbo	93.2	2,930	95.8	3,005	98.4	3,080	101.0	3,155	103.6	3,235	62,700	105%
Vihtavuori N165	87.7	2,955	90.1	3,020	92.6	3,095	95.0	3,165	97.4	3,235	64,900	102%
Hodgdon H4831	86.2	2,925	88.6	2,995	91.0	3,065	93.4	3,140	95.8	3,210	64,900	100%
Norma MRP	85.9	2,930	88.3	3,000	90.7	3,070	93.0	3,140	95.4	3,210	64,900	97%
IMR 7828	87.3	2,915	89.7	2,985	92.2	3,060	94.6	3,130	97.0	3,205	64,800	95%
Hodgdon H4831SC	85.3	2,920	87.7	2,990	90.0	3,055	92.4	3,130	94.8	3,200	64,900	93%
Ramshot Magnum	94.4	2,895	97.0	2,970	99.7	3,050	102.3	3,125	104.9	3,200	65,000	103%
Vihtavuori N160	81.2	2,905	83.5	2,970	85.7	3,035	88.0	3,100	90.2	3,165	64,900	95%

210 gr Bullet · 25" barrel

COAL: 3.525" • Bullet length: 1.352" • Seat depth: 0.551" • Usable capacity: 101.8 / 113.8 gr H_2O

Powder	STEP 1 · 90%		STEP 2		STEP 3		STEP 4		STEP 5 · LIMIT			
	gr	fps	gr	fps	gr	fps	gr	fps	gr	fps	psi	Fill
Ramshot Grand	93.4	2,970	96.0	3,045	98.6	3,120	101.2	3,200	103.8	3,275	65,000	104%
Alliant Reloder 23	85.8	2,960	88.2	3,030	90.5	3,100	92.9	3,170	95.3	3,240	64,900	102%
Alliant Reloder 26	88.3	2,945	90.8	3,020	93.2	3,090	95.6	3,160	98.1	3,235	64,900	97%
Vihtavuori N565	91.2	2,935	93.7	3,005	96.3	3,080	98.8	3,155	101.3	3,230	64,900	105%
Accurate MagPro	92.3	2,915	94.8	2,990	97.4	3,065	100.0	3,145	102.5	3,220	64,900	103%
Hodgdon SUPERFORMANCE	82.7	2,940	85.0	3,010	87.3	3,075	89.6	3,145	91.9	3,215	64,900	88%
Accurate 4350	80.6	2,935	82.8	3,000	85.1	3,070	87.3	3,135	89.6	3,205	65,000	92%
Hodgdon Hybrid 100V	79.2	2,935	81.4	3,000	83.6	3,070	85.8	3,140	88.0	3,205	64,800	97%
Alliant Reloder 22	85.2	2,915	87.6	2,985	90.0	3,060	92.3	3,125	94.7	3,200	65,000	99%
Hodgdon Retumbo	92.5	2,895	95.1	2,965	97.7	3,040	100.2	3,115	102.8	3,190	64,100	105%
Vihtavuori N560	85.7	2,910	88.1	2,980	90.5	3,045	92.8	3,110	95.2	3,175	64,900	98%
IMR 4350	79.5	2,910	81.7	2,975	83.9	3,040	86.1	3,105	88.3	3,170	64,900	93%
IMR 7828SSC	86.7	2,890	89.1	2,960	91.5	3,030	93.9	3,100	96.3	3,170	64,900	98%
Winchester Supreme 780	86.7	2,890	89.1	2,955	91.5	3,025	93.9	3,100	96.3	3,170	64,900	95%
Alliant Reloder 19	82.9	2,890	85.2	2,960	87.5	3,025	89.8	3,095	92.1	3,165	64,900	96%
Ramshot Magnum	93.0	2,845	95.6	2,915	98.2	2,990	100.7	3,065	103.3	3,140	64,900	102%
Vihtavuori N555	78.0	2,880	80.2	2,945	82.3	3,005	84.5	3,070	86.7	3,135	64,900	91%
Hodgdon H4831SC	83.9	2,855	86.2	2,920	88.6	2,990	90.9	3,060	93.2	3,125	64,800	92%
Accurate 3100	83.4	2,845	85.7	2,915	88.1	2,985	90.4	3,050	92.7	3,120	65,000	99%
IMR 7977	88.7	2,805	91.2	2,880	93.6	2,945	96.0	3,020	98.5	3,090	61,800	105%

225 gr Bullet · 25" barrel

COAL: 3.550" • Bullet length: 1.382" • Seat depth: 0.556" • Usable capacity: 101.7 / 113.8 gr H_2O

Powder	STEP 1 · 90%		STEP 2		STEP 3		STEP 4		STEP 5 · LIMIT			
	gr	fps	gr	fps	gr	fps	gr	fps	gr	fps	psi	Fill
Ramshot Grand	92.2	2,895	94.8	2,965	97.3	3,040	99.9	3,115	102.4	3,190	65,000	103%
Vihtavuori N570	93.3	2,845	95.9	2,920	98.5	2,990	101.1	3,065	103.7	3,145	63,200	105%
Accurate MagPro	91.0	2,845	93.5	2,915	96.0	2,990	98.6	3,065	101.1	3,140	64,800	102%
Alliant Reloder 26	86.7	2,865	89.1	2,935	91.5	3,000	93.9	3,070	96.3	3,140	64,900	95%
Alliant Reloder 23	84.2	2,870	86.5	2,935	88.8	3,000	91.2	3,070	93.5	3,135	64,900	100%
Vihtavuori N565	88.7	2,845	91.2	2,915	93.6	2,985	96.0	3,050	98.5	3,125	64,900	102%
Hodgdon Retumbo	91.5	2,830	94.0	2,900	96.6	2,975	99.2	3,045	101.7	3,120	64,900	104%
Alliant Reloder 22	83.6	2,830	85.9	2,895	88.3	2,965	90.6	3,035	92.9	3,100	64,900	97%
Reload Swiss RS70	82.8	2,830	85.1	2,895	87.4	2,960	89.7	3,030	92.0	3,095	64,800	91%
Winchester StaBALL HD	92.6	2,805	95.2	2,880	97.8	2,950	100.3	3,020	102.9	3,095	65,000	103%
Accurate 4350	78.9	2,835	81.1	2,900	83.3	2,960	85.5	3,025	87.7	3,090	65,000	90%
Alliant Reloder 19	81.5	2,810	83.8	2,875	86.0	2,940	88.3	3,010	90.6	3,080	65,000	95%
Ramshot Magnum	91.6	2,780	94.1	2,850	96.7	2,920	99.3	2,995	101.8	3,065	64,900	100%
Vihtavuori N560	83.4	2,805	85.7	2,870	88.1	2,935	90.4	2,995	92.7	3,060	64,900	95%
IMR 7977	88.5	2,770	91.0	2,840	93.4	2,905	95.8	2,975	98.3	3,050	64,000	105%
Hodgdon H1000	88.5	2,765	91.0	2,835	93.4	2,900	95.8	2,970	98.3	3,040	62,200	105%
Hodgdon H4831	83.1	2,780	85.4	2,845	87.7	2,910	90.0	2,975	92.3	3,040	64,900	97%
IMR 7828	84.0	2,775	86.3	2,840	88.7	2,910	91.0	2,975	93.3	3,040	65,000	92%
Vihtavuori N165	84.0	2,780	86.3	2,845	88.7	2,910	91.0	2,975	93.3	3,040	64,900	99%
Accurate 3100	81.8	2,765	84.1	2,830	86.3	2,895	88.6	2,960	90.9	3,025	64,800	97%

250 gr Bullet · 25" barrel

COAL: 3.560" • Bullet length: 1.550" • Seat depth: 0.714" • Usable capacity: 98.4 / 113.8 gr H_2O

Powder	STEP 1 · 90%		STEP 2		STEP 3		STEP 4		STEP 5 · LIMIT			
	gr	fps	gr	fps	gr	fps	gr	fps	gr	fps	psi	Fill
Vihtavuori N570	90.0	2,755	92.5	2,825	95.0	2,895	97.5	2,965	100.0	3,035	64,800	105%
Ramshot Grand	88.4	2,755	90.9	2,820	93.3	2,890	95.8	2,960	98.2	3,030	64,900	102%
Accurate MagPro	87.4	2,720	89.8	2,790	92.3	2,860	94.7	2,925	97.1	2,995	65,000	101%
Alliant Reloder 26	82.7	2,720	85.0	2,785	87.3	2,850	89.6	2,915	91.9	2,980	65,000	94%
Alliant Reloder 23	80.2	2,715	82.4	2,775	84.7	2,840	86.9	2,900	89.1	2,965	64,800	98%
Hodgdon Retumbo	87.7	2,700	90.1	2,765	92.6	2,830	95.0	2,900	97.4	2,965	64,900	103%
Vihtavuori N565	83.8	2,700	86.1	2,760	88.4	2,825	90.8	2,890	93.1	2,955	64,900	99%
Winchester StaBALL HD	88.7	2,675	91.2	2,740	93.7	2,805	96.1	2,875	98.6	2,940	65,000	102%
Alliant Reloder 22	79.7	2,685	81.9	2,745	84.2	2,810	86.4	2,875	88.6	2,935	64,800	96%
Hodgdon H1000	85.7	2,665	88.1	2,730	90.5	2,795	92.8	2,860	95.2	2,930	64,200	105%
Ramshot Magnum	87.8	2,660	90.3	2,725	92.7	2,790	95.1	2,860	97.6	2,930	64,900	100%
Alliant Reloder 19	77.9	2,670	80.1	2,735	82.3	2,795	84.4	2,860	86.6	2,920	65,000	93%
Winchester Supreme 780	81.1	2,665	83.3	2,730	85.6	2,790	87.8	2,855	90.1	2,920	64,900	92%
IMR 7977	85.1	2,650	87.5	2,715	89.8	2,780	92.2	2,845	94.6	2,915	64,800	104%
IMR 7828SSC	80.8	2,660	83.0	2,720	85.3	2,785	87.5	2,845	89.8	2,910	64,900	95%
IMR 7828	79.8	2,630	82.0	2,690	84.3	2,755	86.5	2,815	88.7	2,880	64,900	91%
Ramshot Hunter	75.7	2,640	77.8	2,695	79.9	2,755	82.0	2,815	84.1	2,875	65,000	91%
Vihtavuori N560	78.9	2,640	81.1	2,700	83.3	2,755	85.5	2,815	87.7	2,875	64,900	93%
Accurate 3100	78.0	2,625	80.2	2,685	82.3	2,745	84.5	2,810	86.7	2,870	64,900	96%
Vihtavuori N165	79.7	2,620	81.9	2,680	84.2	2,740	86.4	2,800	88.6	2,860	64,800	97%

285 gr Bullet · 25" barrel

COAL: 3.625" • Bullet length: 1.744" • Seat depth: 0.843" • Usable capacity: 95.6 / 113.8 gr H_2O

Powder	STEP 1 · 90%		STEP 2		STEP 3		STEP 4		STEP 5 · LIMIT			
	gr	fps	gr	fps	gr	fps	gr	fps	gr	fps	psi	Fill
Ramshot Grand	84.3	2,580	86.7	2,645	89.0	2,705	91.3	2,770	93.7	2,835	65,000	100%
Accurate MagPro	83.3	2,555	85.6	2,620	87.9	2,685	90.3	2,750	92.6	2,815	64,900	99%
IMR 8133	85.8	2,535	88.2	2,600	90.5	2,660	92.9	2,725	95.3	2,790	64,800	104%
Vihtavuori N568	86.0	2,515	88.4	2,580	90.8	2,645	93.2	2,715	95.6	2,780	64,800	103%
Alliant Reloder 26	78.0	2,530	80.2	2,590	82.3	2,645	84.5	2,710	86.7	2,770	64,800	91%
Hodgdon Retumbo	83.3	2,525	85.6	2,585	87.9	2,645	90.3	2,710	92.6	2,770	64,900	101%
Ramshot Magnum	83.6	2,505	85.9	2,565	88.3	2,630	90.6	2,690	92.9	2,755	64,900	98%
Hodgdon H1000	81.7	2,505	84.0	2,565	86.3	2,630	88.5	2,685	90.8	2,750	65,000	103%
Alliant Reloder 25	79.9	2,495	82.1	2,550	84.3	2,610	86.6	2,675	88.8	2,735	64,900	101%
Hodgdon Hybrid 100V	71.0	2,510	73.0	2,570	75.0	2,625	76.9	2,680	78.9	2,735	65,000	93%
Vihtavuori N565	77.9	2,505	80.1	2,565	82.2	2,620	84.3	2,675	86.5	2,735	64,800	95%
IMR 7977	81.1	2,485	83.3	2,545	85.6	2,605	87.8	2,665	90.1	2,730	65,000	102%
Alliant Reloder 22	75.3	2,500	77.4	2,555	79.5	2,610	81.6	2,670	83.7	2,725	64,900	93%
IMR 4831	73.0	2,495	75.0	2,550	77.0	2,610	79.1	2,670	81.1	2,725	64,900	91%
Reload Swiss RS76	82.8	2,480	85.1	2,540	87.4	2,600	89.7	2,660	92.0	2,720	64,900	97%
Winchester Supreme 780	76.4	2,480	78.5	2,535	80.7	2,595	82.8	2,655	84.9	2,710	64,900	89%
Hodgdon H50BMG	88.7	2,435	91.2	2,500	93.6	2,560	96.0	2,620	98.5	2,685	62,700	105%
Hodgdon H4831	74.6	2,445	76.7	2,500	78.8	2,555	80.8	2,610	82.9	2,670	64,900	93%
Norma MRP	74.4	2,440	76.5	2,495	78.6	2,555	80.6	2,605	82.7	2,665	64,900	90%
Vihtavuori N170	78.3	2,395	80.5	2,450	82.7	2,505	84.8	2,555	87.0	2,610	64,900	95%

300 gr Bullet · 25" barrel

COAL: 3.650" • Bullet length: 1.750" • Seat depth: 0.824" • Usable capacity: 96.0 / 113.8 gr H_2O

Powder	STEP 1 · 90%		STEP 2		STEP 3		STEP 4		STEP 5 · LIMIT			
	gr	fps	gr	fps	gr	fps	gr	fps	gr	fps	psi	Fill
Vihtavuori N570	83.3	2,525	85.6	2,585	87.9	2,645	90.3	2,710	92.6	2,770	65,000	99%
Ramshot Grand	83.5	2,520	85.8	2,580	88.2	2,645	90.5	2,705	92.8	2,765	64,900	98%
Accurate MagPro	82.6	2,505	84.9	2,565	87.2	2,625	89.5	2,690	91.8	2,750	64,900	98%
IMR 8133	85.1	2,480	87.5	2,545	89.8	2,605	92.2	2,670	94.6	2,735	65,000	102%
Vihtavuori N568	85.3	2,480	87.7	2,540	90.0	2,605	92.4	2,670	94.8	2,735	65,000	102%
Hodgdon Retumbo	82.4	2,465	84.7	2,525	87.0	2,585	89.2	2,640	91.5	2,705	64,900	99%
Ramshot Magnum	82.8	2,455	85.1	2,510	87.4	2,570	89.7	2,635	92.0	2,695	65,000	96%
Winchester StaBALL HD	83.4	2,445	85.7	2,500	88.1	2,565	90.4	2,620	92.7	2,685	65,000	98%
Hodgdon H1000	80.7	2,445	83.0	2,505	85.2	2,560	87.5	2,625	89.7	2,680	64,800	101%
Alliant Reloder 25	79.1	2,435	81.3	2,495	83.5	2,555	85.7	2,610	87.9	2,670	64,800	100%
Alliant Reloder 23	74.4	2,445	76.5	2,500	78.6	2,555	80.6	2,605	82.7	2,665	65,000	93%
Hodgdon Hybrid 100V	70.3	2,450	72.3	2,505	74.2	2,555	76.1	2,610	78.1	2,665	65,000	91%
IMR 7977	80.3	2,430	82.5	2,490	84.8	2,550	87.0	2,605	89.2	2,665	64,900	101%
Hodgdon H50BMG	88.8	2,410	91.3	2,470	93.8	2,530	96.2	2,590	98.7	2,655	64,800	105%
Alliant Reloder 22	74.3	2,435	76.3	2,485	78.4	2,540	80.5	2,600	82.5	2,650	65,000	91%
Vihtavuori N565	76.1	2,430	78.2	2,485	80.3	2,540	82.5	2,595	84.6	2,650	64,900	93%
IMR 7828SSC	75.1	2,410	77.2	2,465	79.3	2,520	81.3	2,575	83.4	2,630	65,000	90%
IMR 7828	74.1	2,385	76.1	2,435	78.2	2,495	80.3	2,550	82.3	2,600	64,800	86%
Vihtavuori N165	73.7	2,355	75.8	2,405	77.8	2,455	79.9	2,510	81.9	2,560	65,000	92%
Vihtavuori N560	72.2	2,355	74.2	2,405	76.2	2,455	78.2	2,505	80.2	2,555	64,900	87%

.338 Norma Magnum

The .338 Norma Magnum began as a wildcat designed by American sport shooter Jimmie Sloan. The Swedish ammunition maker Norma acquired and refined the design. It introduced the cartridge in 2008 and began production in 2009. The case is derived from the .416 Rigby family. It is shorter than the .338 Lapua Magnum. This allows long 300-grain bullets to be seated without intruding into the powder space in actions with length restrictions. The C.I.P. standardized the cartridge in May 2010.

The standard factory load uses a 300-grain Sierra MatchKing bullet at about 2,700 fps from a 24-inch barrel. The cartridge is used for long-range target shooting. It also serves in military sniping and machine-gun applications. In 2019 U.S. Special Operations Command awarded Barrett a contract for the Mk 22 Advanced Sniper Rifle. That rifle is chambered in .338 Norma Magnum among other calibers. In 2020 SIG Sauer received a contract for its MG 338 machine gun in the caliber.

Cartridge specifications	
Bullet Diameter	**0.338" (8.59 mm)**
Max Case Length	**2.492" (63.30 mm)**
Case Trim Length	**2.482" (63.04 mm)**
Max COAL	**3.681" (93.50 mm)**
Primer Pocket	**Large Rifle**
Standard Twist	**1:10"**
Case Capacity	**105.6 gr H_2O**
Max Pressure	**62,500 psi (SAAMI)**

215 gr Bullet · 25" barrel

COAL: 3.428" • Bullet length: 1.274" • Seat depth: 0.338" • Usable capacity: 98.6 / 105.6 gr H_2O

Powder	STEP 1 · 90%		STEP 2		STEP 3		STEP 4		STEP 5 · LIMIT			
	gr	fps	gr	fps	gr	fps	gr	fps	gr	fps	psi	Fill
Alliant Reloder 26	86.0	2,905	88.4	2,980	90.8	3,050	93.2	3,120	95.6	3,195	62,500	97%
Alliant Reloder 23	82.3	2,885	84.6	2,950	86.8	3,015	89.1	3,085	91.4	3,155	62,500	101%
Ramshot Grand	88.7	2,860	91.2	2,935	93.6	3,005	96.0	3,075	98.5	3,150	62,500	102%
Reload Swiss RS76	90.6	2,850	93.1	2,920	95.7	2,995	98.2	3,065	100.7	3,140	62,400	103%
Vihtavuori N565	87.6	2,855	90.0	2,925	92.4	2,995	94.9	3,070	97.3	3,140	62,400	104%
Hodgdon SUPERFORMANCE	79.3	2,860	81.5	2,925	83.7	2,995	85.9	3,060	88.1	3,125	62,500	87%
Alliant Reloder 22	81.9	2,845	84.2	2,910	86.5	2,980	88.7	3,045	91.0	3,115	62,400	98%
Vihtavuori N560	82.6	2,845	84.9	2,910	87.2	2,975	89.5	3,040	91.8	3,105	62,500	97%
Vihtavuori N570	90.5	2,800	93.0	2,870	95.5	2,945	98.0	3,020	100.5	3,095	59,400	105%
IMR 7828SSC	83.3	2,815	85.6	2,885	87.9	2,950	90.2	3,020	92.5	3,090	62,400	98%
Winchester Supreme 780	83.1	2,810	85.4	2,875	87.7	2,945	90.0	3,010	92.3	3,080	62,500	94%
Norma MRP	81.6	2,810	83.9	2,875	86.2	2,940	88.4	3,005	90.7	3,075	62,400	96%
Hodgdon H4831SC	81.4	2,805	83.7	2,875	85.9	2,940	88.2	3,005	90.4	3,070	62,400	92%
Accurate MagPro	86.7	2,780	89.1	2,850	91.5	2,920	93.9	2,990	96.3	3,065	62,400	100%
Alliant Reloder 25	85.3	2,780	87.7	2,850	90.0	2,920	92.4	2,990	94.8	3,065	61,200	105%
Ramshot Magnum	88.8	2,755	91.3	2,825	93.8	2,895	96.2	2,965	98.7	3,040	62,400	100%
IMR 7977	85.9	2,755	88.3	2,820	90.7	2,895	93.0	2,960	95.4	3,035	62,400	105%
Hodgdon H1000	85.9	2,745	88.3	2,815	90.7	2,885	93.0	2,955	95.4	3,025	61,300	105%
Vihtavuori N165	80.7	2,755	83.0	2,820	85.2	2,880	87.5	2,945	89.7	3,010	62,500	98%
Alliant Reloder 16	72.2	2,765	74.2	2,820	76.2	2,880	78.2	2,940	80.2	3,000	62,500	90%

225 gr Bullet · 25" barrel

COAL: 3.414" • Bullet length: 1.260" • Seat depth: 0.338" • Usable capacity: 97.9 / 105.6 gr H_2O

Powder	STEP 1 · 90%		STEP 2		STEP 3		STEP 4		STEP 5 · LIMIT			
	gr	fps	gr	fps	gr	fps	gr	fps	gr	fps	psi	Fill
Alliant Reloder 26	84.8	2,855	87.2	2,925	89.5	2,990	91.8	3,060	94.2	3,130	62,400	97%
Ramshot Grand	87.6	2,810	90.0	2,880	92.4	2,950	94.9	3,020	97.3	3,095	62,500	101%
Reload Swiss RS76	89.5	2,800	92.0	2,870	94.5	2,940	96.9	3,010	99.4	3,080	62,400	102%
Vihtavuori N565	86.0	2,805	88.4	2,875	90.8	2,940	93.1	3,010	95.5	3,080	62,300	102%
Vihtavuori N570	89.9	2,780	92.4	2,855	94.9	2,925	97.4	3,000	99.9	3,075	60,600	105%
Alliant Reloder 22	80.6	2,785	82.8	2,850	85.1	2,920	87.3	2,985	89.6	3,055	62,300	97%
Hodgdon SUPERFORMANCE	78.0	2,795	80.2	2,860	82.3	2,925	84.5	2,990	86.7	3,055	62,300	87%
Hodgdon Retumbo	87.8	2,770	90.2	2,840	92.7	2,910	95.1	2,980	97.5	3,050	62,400	104%
Accurate 4350	76.0	2,795	78.1	2,855	80.2	2,920	82.3	2,980	84.4	3,045	62,400	90%
Winchester StaBALL HD	89.4	2,760	91.9	2,830	94.3	2,900	96.8	2,970	99.3	3,040	62,300	103%
Alliant Reloder 25	84.8	2,755	87.2	2,820	89.5	2,890	91.8	2,955	94.2	3,030	62,300	105%
Vihtavuori N560	81.0	2,780	83.3	2,845	85.5	2,905	87.8	2,970	90.0	3,030	62,300	96%
Winchester Supreme 780	81.8	2,755	84.1	2,820	86.3	2,885	88.6	2,955	90.9	3,020	62,400	93%
Hodgdon H4831SC	80.2	2,750	82.4	2,815	84.7	2,880	86.9	2,945	89.1	3,010	62,400	92%
Hodgdon H1000	85.2	2,715	87.6	2,780	90.0	2,850	92.3	2,920	94.7	2,990	62,300	105%
Ramshot Magnum	87.8	2,715	90.2	2,780	92.7	2,855	95.1	2,920	97.5	2,990	62,400	100%
IMR 7828	80.8	2,725	83.0	2,790	85.3	2,855	87.5	2,920	89.8	2,985	62,400	92%
IMR 7977	84.8	2,705	87.2	2,775	89.5	2,845	91.8	2,910	94.2	2,980	62,500	104%
Vihtavuori N165	79.3	2,695	81.5	2,755	83.7	2,815	85.9	2,880	88.1	2,940	62,400	97%
Vihtavuori N170	83.8	2,695	86.1	2,755	88.4	2,815	90.8	2,880	93.1	2,940	62,400	99%

250 gr Bullet · 25" barrel

COAL: 3.500" • Bullet length: 1.553" • Seat depth: 0.545" • Usable capacity: 94.1 / 105.6 gr H_2O

Powder	STEP 1 · 90%		STEP 2		STEP 3		STEP 4		STEP 5 · LIMIT			
	gr	fps	gr	fps	gr	fps	gr	fps	gr	fps	psi	Fill
Vihtavuori N570	86.3	2,690	88.7	2,760	91.1	2,825	93.5	2,895	95.9	2,965	62,400	105%
Alliant Reloder 26	80.5	2,700	82.7	2,765	85.0	2,830	87.2	2,895	89.4	2,960	62,500	95%
Ramshot Grand	83.4	2,660	85.7	2,725	88.1	2,795	90.4	2,860	92.7	2,930	62,300	100%
Reload Swiss RS76	85.1	2,645	87.5	2,715	89.8	2,775	92.2	2,845	94.6	2,910	62,300	101%
Alliant Reloder 23	76.8	2,660	78.9	2,720	81.0	2,780	83.2	2,845	85.3	2,905	62,400	98%
Vihtavuori N565	80.7	2,650	83.0	2,715	85.2	2,775	87.5	2,840	89.7	2,905	62,400	100%
Hodgdon Retumbo	83.6	2,630	85.9	2,695	88.3	2,760	90.6	2,825	92.9	2,890	62,500	103%
Alliant Reloder 22	76.5	2,635	78.6	2,695	80.8	2,760	82.9	2,820	85.0	2,885	62,400	96%
Alliant Reloder 25	80.7	2,610	83.0	2,680	85.2	2,740	87.5	2,805	89.7	2,870	62,400	104%
IMR 8133	85.1	2,600	87.4	2,665	89.8	2,735	92.2	2,805	94.5	2,870	62,400	104%
IMR 7828SSC	77.4	2,610	79.6	2,670	81.7	2,730	83.8	2,790	86.0	2,855	62,400	95%
Ramshot Magnum	83.5	2,580	85.8	2,645	88.2	2,715	90.5	2,780	92.8	2,845	62,400	99%
Hodgdon H4831SC	76.1	2,595	78.2	2,655	80.3	2,715	82.5	2,780	84.6	2,840	62,500	90%
Norma MRP	76.2	2,595	78.3	2,655	80.5	2,720	82.6	2,780	84.7	2,840	62,500	94%
Hodgdon H1000	81.1	2,580	83.3	2,640	85.6	2,705	87.8	2,770	90.1	2,835	62,400	104%
Vihtavuori N560	76.1	2,605	78.2	2,660	80.3	2,720	82.5	2,780	84.6	2,835	62,400	94%
Vihtavuori N568	85.9	2,550	88.3	2,620	90.7	2,690	93.0	2,760	95.4	2,830	61,900	105%
Hodgdon H4831	75.7	2,575	77.8	2,635	79.9	2,695	82.0	2,760	84.1	2,820	62,400	96%
IMR 7828	76.4	2,575	78.5	2,635	80.7	2,700	82.8	2,760	84.9	2,820	62,500	91%
Accurate 3100	74.5	2,565	76.6	2,625	78.7	2,685	80.7	2,745	82.8	2,805	62,400	95%

280 gr Bullet · 25" barrel

COAL: 3.610" • Bullet length: 1.726" • Seat depth: 0.608" • Usable capacity: 92.6 / 105.6 gr H_2O

Powder	STEP 1 · 90%		STEP 2		STEP 3		STEP 4		STEP 5 · LIMIT			
	gr	fps	gr	fps	gr	fps	gr	fps	gr	fps	psi	Fill
Vihtavuori N570	82.6	2,565	84.9	2,630	87.2	2,690	89.5	2,755	91.8	2,820	62,500	102%
Alliant Reloder 26	77.0	2,545	79.2	2,610	81.3	2,665	83.4	2,725	85.6	2,790	62,300	93%
Ramshot Grand	80.6	2,525	82.8	2,585	85.1	2,650	87.3	2,710	89.6	2,775	62,400	99%
Reload Swiss RS76	82.1	2,505	84.4	2,565	86.7	2,630	88.9	2,685	91.2	2,750	62,400	99%
Hodgdon Retumbo	80.5	2,495	82.7	2,550	85.0	2,615	87.2	2,675	89.4	2,735	62,300	100%
Vihtavuori N568	83.3	2,475	85.6	2,540	87.9	2,600	90.2	2,670	92.5	2,735	62,400	103%
IMR 8133	82.2	2,480	84.5	2,545	86.8	2,605	89.0	2,665	91.3	2,730	62,300	102%
Winchester StaBALL HD	82.1	2,485	84.4	2,550	86.7	2,610	88.9	2,670	91.2	2,730	62,400	100%
Accurate MagPro	78.9	2,480	81.1	2,540	83.3	2,600	85.5	2,665	87.7	2,725	62,500	97%
Alliant Reloder 25	77.9	2,485	80.1	2,545	82.2	2,600	84.3	2,660	86.5	2,720	62,400	102%
Vihtavuori N565	76.1	2,490	78.2	2,550	80.3	2,605	82.5	2,665	84.6	2,720	62,400	96%
Ramshot Magnum	80.6	2,465	82.8	2,525	85.1	2,585	87.3	2,645	89.6	2,710	62,500	97%
IMR 4831	70.8	2,480	72.8	2,535	74.8	2,595	76.7	2,650	78.7	2,705	62,400	91%
Hodgdon Hybrid 100V	68.0	2,470	69.9	2,525	71.8	2,580	73.7	2,640	75.6	2,695	62,400	92%
Hodgdon H1000	78.1	2,450	80.3	2,510	82.4	2,570	84.6	2,630	86.8	2,690	62,500	102%
IMR 7828SSC	74.0	2,460	76.0	2,515	78.1	2,570	80.2	2,630	82.2	2,685	62,400	92%
IMR 7977	77.9	2,445	80.1	2,505	82.2	2,560	84.3	2,620	86.5	2,680	62,500	101%
Hodgdon H4831	72.4	2,425	74.4	2,480	76.4	2,535	78.4	2,595	80.4	2,650	62,400	93%
Vihtavuori N560	72.1	2,430	74.1	2,485	76.1	2,535	78.1	2,590	80.1	2,645	62,400	90%
Vihtavuori 24N41	82.6	2,380	84.9	2,440	87.2	2,505	89.5	2,565	91.8	2,630	62,400	101%

300 gr Bullet · 25" barrel

COAL: 3.600" • Bullet length: 1.700" • Seat depth: 0.592" • Usable capacity: 93.0 / 105.6 gr H_2O

Powder	STEP 1 · 90%		STEP 2		STEP 3		STEP 4		STEP 5 · LIMIT			
	gr	fps	gr	fps	gr	fps	gr	fps	gr	fps	psi	Fill
Vihtavuori N570	80.6	2,480	82.8	2,540	85.0	2,600	87.3	2,660	89.5	2,720	62,400	99%
Ramshot Grand	79.5	2,445	81.7	2,505	83.9	2,565	86.1	2,625	88.3	2,685	62,300	97%
Ramshot LRT	86.2	2,420	88.6	2,480	91.0	2,545	93.4	2,605	95.8	2,670	60,400	105%
Vihtavuori N568	82.1	2,420	84.4	2,485	86.7	2,545	88.9	2,605	91.2	2,670	62,400	101%
IMR 8133	81.2	2,410	83.5	2,475	85.7	2,530	88.0	2,595	90.2	2,655	62,500	101%
Reload Swiss RS76	80.7	2,420	83.0	2,480	85.2	2,535	87.5	2,595	89.7	2,655	62,400	97%
Hodgdon Retumbo	79.1	2,410	81.3	2,470	83.5	2,525	85.7	2,585	87.9	2,645	62,400	98%
Accurate MagPro	77.8	2,405	80.0	2,465	82.1	2,525	84.3	2,585	86.4	2,640	62,400	95%
Winchester StaBALL HD	80.7	2,405	83.0	2,465	85.2	2,520	87.5	2,580	89.7	2,640	62,400	98%
Alliant Reloder 25	76.7	2,405	78.8	2,460	81.0	2,520	83.1	2,575	85.2	2,635	62,400	100%
Ramshot Magnum	79.4	2,395	81.6	2,450	83.8	2,510	86.0	2,570	88.2	2,630	62,400	95%
Hodgdon H50BMG	86.2	2,375	88.6	2,435	91.0	2,495	93.4	2,555	95.8	2,620	62,100	105%
Alliant Reloder 22	71.7	2,390	73.7	2,445	75.7	2,500	77.7	2,555	79.7	2,610	62,400	91%
Vihtavuori N565	73.6	2,390	75.6	2,445	77.7	2,500	79.8	2,555	81.8	2,605	62,500	92%
Hodgdon H1000	76.8	2,375	78.9	2,430	81.0	2,485	83.2	2,545	85.3	2,600	62,400	100%
IMR 7828SSC	72.4	2,370	74.4	2,420	76.4	2,475	78.4	2,530	80.4	2,585	62,400	90%
Alliant Reloder 33	81.0	2,340	83.3	2,400	85.5	2,455	87.8	2,515	90.0	2,575	59,800	105%
Vihtavuori 24N41	81.3	2,320	83.5	2,375	85.8	2,435	88.0	2,495	90.3	2,555	62,400	99%
Hodgdon H4831	70.8	2,335	72.8	2,390	74.8	2,440	76.7	2,495	78.7	2,545	62,400	91%
Vihtavuori N560	69.9	2,320	71.9	2,375	73.8	2,425	75.8	2,475	77.7	2,525	62,300	87%

.338 Remington Ultra Magnum

Remington introduced the .338 Remington Ultra Magnum in 2002 as part of its Ultra Magnum line. It is based on the .300 Remington Ultra Magnum case shortened by about .090 inch and necked up to accept .338-inch bullets. The .300 Ultra Magnum case descends from the .404 Jeffery. The rebated-rim unbelted case was designed to fit standard magnum-length bolt actions.

Remington's factory load drives a 250-grain bullet at about 2,860 fps from a 26-inch test barrel. This performance places it among the most powerful .338-caliber hunting cartridges. Like the other Ultra Magnums it requires a magnum-length action. Hunters use it for elk, moose and large bears. It is used especially at longer ranges. Its recoil is correspondingly heavy. The cartridge remains in production.

Cartridge specifications	
Bullet Diameter	**0.338" (8.59 mm)**
Max Case Length	**2.760" (70.11 mm)**
Case Trim Length	**2.750" (69.86 mm)**
Max COAL	**3.600" (91.44 mm)**
Primer Pocket	**Large Rifle**
Standard Twist	**1:10"**
Case Capacity	**110.2 gr H_2O**
Max Pressure	**65,000 psi (SAAMI)**

185 gr Bullet · 25" barrel

COAL: 3.550" • Bullet length: 1.241" • Seat depth: 0.451" • Usable capacity: 103.3 / 113.0 gr H_2O

Powder	STEP 1 · 90%		STEP 2		STEP 3		STEP 4		STEP 5 · LIMIT			
	gr	fps	gr	fps	gr	fps	gr	fps	gr	fps	psi	Fill
Alliant Reloder 26	94.8	3,185	97.4	3,265	100.0	3,345	102.7	3,430	105.3	3,515	64,900	102%
Alliant Reloder 22	91.4	3,150	93.9	3,230	96.5	3,310	99.0	3,385	101.5	3,465	64,900	104%
Hodgdon SUPERFORMANCE	87.8	3,160	90.3	3,240	92.7	3,310	95.1	3,385	97.6	3,465	64,900	92%
Vihtavuori N560	92.5	3,165	95.1	3,240	97.7	3,315	100.2	3,390	102.8	3,465	64,900	104%
Accurate 4350	85.8	3,165	88.2	3,240	90.5	3,310	92.9	3,385	95.3	3,460	64,900	96%
Alliant Reloder 23	89.9	3,145	92.4	3,220	94.9	3,300	97.4	3,375	99.9	3,455	63,000	105%
Reload Swiss RS62	86.9	3,130	89.3	3,205	91.8	3,280	94.2	3,355	96.6	3,435	64,900	97%
Hodgdon H4350	84.9	3,140	87.3	3,210	89.6	3,285	92.0	3,360	94.3	3,430	64,900	92%
IMR 4350	84.7	3,135	87.0	3,205	89.4	3,280	91.8	3,355	94.1	3,430	64,900	98%
Ramshot Grand	95.8	3,090	98.5	3,170	101.1	3,250	103.8	3,335	106.4	3,415	64,600	105%
IMR 4831	86.0	3,095	88.4	3,170	90.8	3,245	93.2	3,325	95.6	3,400	65,000	99%
Hodgdon H4831SC	89.9	3,090	92.4	3,165	94.9	3,240	97.4	3,315	99.9	3,395	65,000	97%
Winchester Supreme 780	91.8	3,075	94.3	3,150	96.9	3,230	99.5	3,315	102.0	3,390	64,900	99%
Alliant Power Pro 4000-MR	86.3	3,090	88.7	3,160	91.1	3,235	93.5	3,310	95.9	3,385	64,900	95%
Accurate MagPro	95.6	3,050	98.3	3,130	100.9	3,210	103.5	3,290	106.2	3,375	64,400	105%
IMR 7828	90.8	3,035	93.3	3,110	95.8	3,190	98.4	3,270	100.9	3,345	64,900	98%
Vihtavuori N160	85.0	3,060	87.3	3,125	89.7	3,200	92.1	3,270	94.4	3,340	64,900	99%
Hodgdon Hybrid 100V	80.4	3,045	82.6	3,115	84.8	3,185	87.1	3,260	89.3	3,330	64,800	97%
Vihtavuori N165	88.8	3,020	91.3	3,090	93.8	3,165	96.2	3,235	98.7	3,310	64,900	103%
Shooters World SW4350	83.7	3,020	86.0	3,090	88.3	3,160	90.7	3,230	93.0	3,300	65,000	98%

200 gr Bullet · 25" barrel

COAL: 3.575" • Bullet length: 1.264" • Seat depth: 0.449" • Usable capacity: 103.4 / 113.0 gr H_2O

Powder	STEP 1 · 90%		STEP 2		STEP 3		STEP 4		STEP 5 · LIMIT			
	gr	fps	gr	fps	gr	fps	gr	fps	gr	fps	psi	Fill
Alliant Reloder 26	93.2	3,095	95.8	3,175	98.4	3,250	101.0	3,330	103.6	3,410	64,900	101%
Alliant Reloder 23	89.3	3,075	91.8	3,150	94.3	3,225	96.7	3,295	99.2	3,370	64,800	104%
Alliant Reloder 22	89.8	3,060	92.3	3,135	94.8	3,210	97.3	3,285	99.8	3,360	64,900	102%
Hodgdon SUPERFORMANCE	86.2	3,055	88.6	3,130	91.0	3,200	93.4	3,275	95.8	3,345	64,900	91%
Accurate 4350	84.2	3,060	86.5	3,130	88.8	3,195	91.2	3,270	93.5	3,340	65,000	95%
Reload Swiss RS62	85.6	3,040	88.0	3,110	90.3	3,180	92.7	3,255	95.1	3,330	65,000	96%
Vihtavuori N560	90.1	3,045	92.6	3,115	95.1	3,185	97.6	3,260	100.1	3,330	65,000	101%
Ramshot Grand	94.7	3,010	97.3	3,090	100.0	3,170	102.6	3,245	105.2	3,325	64,900	104%
Alliant Reloder 19	87.1	3,020	89.5	3,095	91.9	3,170	94.4	3,245	96.8	3,320	64,900	99%
Reload Swiss RS70	87.8	3,025	90.3	3,100	92.7	3,175	95.1	3,245	97.6	3,320	65,000	95%
Hodgdon H4350	83.0	3,030	85.3	3,095	87.6	3,165	89.9	3,235	92.2	3,305	64,800	90%
Hodgdon H4831	89.3	3,000	91.8	3,075	94.3	3,150	96.7	3,220	99.2	3,300	64,900	103%
IMR 4350	82.8	3,025	85.1	3,090	87.4	3,160	89.7	3,230	92.0	3,300	64,900	96%
Norma 204	82.6	3,005	84.9	3,075	87.2	3,140	89.5	3,210	91.8	3,280	64,900	93%
Alliant Power Pro 4000-MR	84.9	2,990	87.3	3,060	89.6	3,130	92.0	3,200	94.3	3,270	64,900	93%
IMR 7828	89.0	2,950	91.5	3,025	94.0	3,100	96.4	3,170	98.9	3,245	64,900	96%
Winchester StaBALL HD	95.9	2,935	98.6	3,010	101.2	3,085	103.8	3,160	106.5	3,240	63,800	105%
Alliant Reloder 16	79.1	2,965	81.3	3,030	83.5	3,095	85.7	3,160	87.9	3,225	65,000	94%
Ramshot Magnum	95.1	2,900	97.8	2,975	100.4	3,050	103.0	3,130	105.7	3,210	65,000	103%
Vihtavuori N165	86.8	2,915	89.2	2,980	91.6	3,050	94.0	3,120	96.4	3,185	64,800	100%

210 gr Bullet · 25" barrel

COAL: 3.540" • Bullet length: 1.274" • Seat depth: 0.494" • Usable capacity: 102.4 / 113.0 gr H_2O

Powder	STEP 1 · 90%		STEP 2		STEP 3		STEP 4		STEP 5 · LIMIT			
	gr	fps	gr	fps	gr	fps	gr	fps	gr	fps	psi	Fill
Alliant Reloder 26	91.6	3,030	94.1	3,105	96.7	3,180	99.3	3,260	101.8	3,335	65,000	100%
Alliant Reloder 23	87.7	3,005	90.1	3,075	92.6	3,145	95.0	3,220	97.4	3,290	64,900	103%
Alliant Reloder 22	88.2	2,990	90.7	3,065	93.1	3,135	95.5	3,210	98.0	3,285	64,900	102%
Hodgdon SUPERFORMANCE	84.6	2,985	86.9	3,050	89.3	3,120	91.7	3,195	94.0	3,260	64,900	90%
Ramshot Grand	93.2	2,950	95.8	3,025	98.4	3,100	101.0	3,175	103.6	3,255	65,000	103%
Accurate 4350	82.4	2,975	84.7	3,045	87.0	3,110	89.3	3,180	91.6	3,250	64,900	94%
Reload Swiss RS62	84.1	2,970	86.4	3,035	88.8	3,110	91.1	3,180	93.4	3,250	64,900	95%
Reload Swiss RS76	95.5	2,950	98.2	3,025	100.8	3,095	103.4	3,170	106.1	3,250	65,000	105%
Vihtavuori N565	92.0	2,945	94.5	3,015	97.1	3,090	99.7	3,165	102.2	3,240	62,800	105%
Vihtavuori N560	87.9	2,960	90.4	3,030	92.8	3,095	95.3	3,165	97.7	3,235	64,800	100%
Hodgdon H4350	81.3	2,950	83.5	3,015	85.8	3,085	88.0	3,150	90.3	3,220	64,900	89%
IMR 7828SSC	88.6	2,930	91.0	3,000	93.5	3,075	96.0	3,145	98.4	3,220	64,900	100%
IMR 4350	81.1	2,945	83.3	3,010	85.6	3,075	87.8	3,140	90.1	3,210	64,900	94%
Winchester StaBALL HD	94.9	2,890	97.5	2,965	100.2	3,040	102.8	3,115	105.4	3,190	64,900	105%
Vihtavuori N555	80.0	2,925	82.2	2,990	84.5	3,055	86.7	3,120	88.9	3,185	65,000	93%
IMR 7828	87.3	2,890	89.7	2,960	92.2	3,030	94.6	3,100	97.0	3,170	64,900	95%
Ramshot Magnum	93.6	2,845	96.2	2,920	98.8	2,995	101.4	3,070	104.0	3,145	65,000	102%
Vihtavuori N170	90.8	2,870	93.3	2,935	95.8	3,000	98.4	3,070	100.9	3,140	65,000	102%
Alliant Reloder 16	77.3	2,880	79.5	2,945	81.6	3,005	83.8	3,070	85.9	3,130	64,900	93%
Vihtavuori N160	81.4	2,865	83.7	2,935	85.9	2,995	88.2	3,060	90.4	3,125	64,800	96%

225 gr Bullet · 25" barrel

COAL: 3.550" • Bullet length: 1.414" • Seat depth: 0.624" • Usable capacity: 99.4 / 113.0 gr H_2O

Powder	STEP 1 · 90%		STEP 2		STEP 3		STEP 4		STEP 5 · LIMIT			
	gr	fps	gr	fps	gr	fps	gr	fps	gr	fps	psi	Fill
Alliant Reloder 26	88.5	2,930	91.0	3,005	93.4	3,075	95.8	3,145	98.3	3,220	64,800	99%
Alliant Reloder 23	84.7	2,900	87.0	2,965	89.4	3,035	91.8	3,105	94.1	3,175	64,900	103%
Alliant Reloder 22	85.2	2,890	87.6	2,960	90.0	3,030	92.3	3,100	94.7	3,170	64,900	101%
Vihtavuori N565	89.3	2,875	91.8	2,945	94.3	3,015	96.7	3,085	99.2	3,160	64,100	105%
Hodgdon SUPERFORMANCE	81.7	2,875	84.0	2,945	86.3	3,010	88.5	3,075	90.8	3,145	64,900	89%
Ramshot Grand	90.3	2,855	92.8	2,925	95.3	3,000	97.8	3,070	100.3	3,145	64,800	103%
Alliant Reloder 19	82.8	2,860	85.1	2,930	87.4	3,000	89.7	3,070	92.0	3,140	64,900	98%
Reload Swiss RS76	92.4	2,850	95.0	2,920	97.6	2,995	100.1	3,065	102.7	3,140	65,000	104%
Accurate 4350	79.6	2,870	81.8	2,935	84.0	2,995	86.2	3,060	88.4	3,130	64,900	93%
Hodgdon H4831	84.6	2,835	86.9	2,900	89.3	2,970	91.7	3,040	94.0	3,110	64,900	102%
Winchester Supreme 780	85.6	2,835	88.0	2,905	90.3	2,970	92.7	3,040	95.1	3,110	64,900	96%
Hodgdon H4350	78.3	2,840	80.5	2,905	82.7	2,970	84.8	3,035	87.0	3,100	65,000	88%
Norma MRP	84.2	2,830	86.5	2,895	88.8	2,965	91.2	3,035	93.5	3,100	65,000	98%
IMR 4350	78.1	2,830	80.3	2,895	82.4	2,960	84.6	3,020	86.8	3,090	64,900	94%
Norma 204	78.4	2,820	80.6	2,885	82.8	2,950	84.9	3,010	87.1	3,080	64,900	92%
Alliant Power Pro 4000-MR	80.5	2,810	82.7	2,875	85.0	2,940	87.2	3,005	89.4	3,070	64,900	92%
IMR 7828	84.2	2,795	86.5	2,860	88.8	2,925	91.2	2,995	93.5	3,060	64,900	95%
Ramshot Magnum	90.6	2,765	93.1	2,835	95.7	2,905	98.2	2,980	100.7	3,050	65,000	102%
Vihtavuori N170	87.4	2,760	89.8	2,820	92.3	2,885	94.7	2,950	97.1	3,015	64,800	102%
Vihtavuori N165	81.8	2,735	84.1	2,795	86.3	2,855	88.6	2,920	90.9	2,985	64,800	98%

250 gr Bullet · 25" barrel

COAL: 3.575" • Bullet length: 1.550" • Seat depth: 0.735" • Usable capacity: 97.2 / 113.0 gr H_2O

Powder	STEP 1 · 90%		STEP 2		STEP 3		STEP 4		STEP 5 · LIMIT			
	gr	fps	gr	fps	gr	fps	gr	fps	gr	fps	psi	Fill
Alliant Reloder 26	85.1	2,790	87.4	2,855	89.8	2,925	92.2	2,995	94.5	3,060	65,000	98%
Alliant Reloder 22	81.9	2,750	84.2	2,815	86.5	2,880	88.7	2,945	91.0	3,010	65,000	99%
Alliant Reloder 23	81.3	2,750	83.5	2,810	85.8	2,875	88.0	2,940	90.3	3,005	64,900	101%
Vihtavuori N565	85.2	2,740	87.6	2,805	90.0	2,875	92.3	2,935	94.7	3,005	65,000	102%
Ramshot Grand	87.2	2,725	89.6	2,790	92.1	2,865	94.5	2,930	96.9	3,000	64,900	102%
Accurate MagPro	87.2	2,720	89.6	2,785	92.1	2,860	94.5	2,930	96.9	2,995	64,800	102%
Hodgdon Retumbo	88.3	2,720	90.8	2,785	93.2	2,855	95.6	2,920	98.1	2,990	61,400	105%
IMR 4831	77.7	2,705	79.8	2,765	82.0	2,830	84.2	2,895	86.3	2,960	64,900	95%
Norma URP	74.4	2,710	76.5	2,770	78.6	2,835	80.6	2,895	82.7	2,955	64,900	93%
Accurate 4350	76.1	2,705	78.2	2,765	80.3	2,825	82.5	2,890	84.6	2,950	65,000	91%
Hodgdon H4831	81.1	2,690	83.3	2,750	85.6	2,815	87.8	2,880	90.1	2,945	64,800	100%
Hodgdon H4831SC	80.6	2,685	82.8	2,745	85.1	2,810	87.3	2,875	89.6	2,940	64,800	93%
Alliant Reloder 25	84.2	2,670	86.5	2,735	88.8	2,800	91.2	2,870	93.5	2,935	63,700	105%
Vihtavuori N560	80.6	2,690	82.8	2,745	85.0	2,805	87.3	2,870	89.5	2,930	65,000	96%
Ramshot Magnum	87.4	2,650	89.8	2,715	92.3	2,785	94.7	2,850	97.1	2,920	64,900	100%
Accurate 3100	79.0	2,655	81.2	2,720	83.4	2,780	85.6	2,845	87.8	2,910	64,900	98%
IMR 4350	74.6	2,675	76.7	2,730	78.8	2,790	80.8	2,850	82.9	2,910	64,900	92%
Ramshot Hunter	76.7	2,670	78.8	2,730	81.0	2,790	83.1	2,850	85.2	2,910	64,900	93%
Alliant Power Pro 4000-MR	77.2	2,660	79.3	2,720	81.5	2,785	83.7	2,845	85.8	2,905	64,800	90%
IMR 7828	80.6	2,655	82.8	2,720	85.0	2,780	87.3	2,845	89.5	2,905	64,900	93%

265 gr Bullet · 25" barrel

COAL: 3.600" • Bullet length: 1.680" • Seat depth: 0.840" • Usable capacity: 94.7 / 113.0 gr H_2O

Powder	STEP 1 · 90%		STEP 2		STEP 3		STEP 4		STEP 5 · LIMIT			
	gr	fps	gr	fps	gr	fps	gr	fps	gr	fps	psi	Fill
Alliant Reloder 26	82.4	2,695	84.7	2,760	87.0	2,825	89.2	2,890	91.5	2,955	65,000	97%
Vihtavuori N570	86.9	2,670	89.3	2,735	91.8	2,805	94.2	2,875	96.6	2,940	62,400	105%
Accurate MagPro	84.8	2,640	87.2	2,705	89.5	2,770	91.8	2,835	94.2	2,905	65,000	101%
Alliant Reloder 22	79.3	2,655	81.5	2,715	83.7	2,780	85.9	2,845	88.1	2,905	65,000	99%
Hodgdon Retumbo	86.0	2,640	88.4	2,705	90.8	2,770	93.2	2,840	95.6	2,905	62,200	105%
Ramshot Grand	84.7	2,635	87.0	2,700	89.4	2,770	91.8	2,835	94.1	2,900	64,900	101%
Alliant Reloder 23	78.7	2,650	80.9	2,710	83.1	2,775	85.2	2,835	87.4	2,895	65,000	100%
Vihtavuori N565	82.0	2,645	84.3	2,710	86.5	2,770	88.8	2,830	91.1	2,895	64,900	101%
Reload Swiss RS76	86.4	2,620	88.8	2,685	91.2	2,750	93.6	2,815	96.0	2,880	64,900	102%
IMR 4831	75.3	2,610	77.4	2,675	79.5	2,735	81.6	2,795	83.7	2,855	64,900	95%
Winchester Supreme 780	79.5	2,605	81.7	2,670	83.9	2,730	86.1	2,790	88.3	2,855	65,000	94%
Alliant Reloder 25	82.0	2,595	84.3	2,655	86.5	2,720	88.8	2,785	91.1	2,850	64,500	105%
IMR 7828SSC	79.1	2,600	81.3	2,660	83.5	2,720	85.7	2,780	87.9	2,845	65,000	96%
Hodgdon H4831	78.5	2,595	80.7	2,660	82.8	2,715	85.0	2,780	87.2	2,840	64,900	99%
Hodgdon H4831SC	78.1	2,590	80.3	2,655	82.4	2,710	84.6	2,775	86.8	2,835	64,900	92%
Ramshot Magnum	84.9	2,575	87.3	2,640	89.6	2,700	92.0	2,770	94.3	2,830	65,000	100%
IMR 7977	82.4	2,565	84.7	2,625	87.0	2,690	89.3	2,755	91.6	2,820	61,300	105%
Vihtavuori N560	77.6	2,585	79.8	2,640	81.9	2,700	84.0	2,755	86.2	2,815	64,900	95%
IMR 7828	77.9	2,565	80.1	2,625	82.2	2,685	84.3	2,740	86.5	2,805	64,900	92%
Hodgdon Hybrid 100V	70.3	2,545	72.3	2,605	74.2	2,660	76.1	2,715	78.1	2,775	64,900	92%

300 gr Bullet · 25" barrel

COAL: 3.580" • Bullet length: 1.780" • Seat depth: 0.960" • Usable capacity: 92.5 / 113.0 gr H_2O

Powder	STEP 1 · 90%		STEP 2		STEP 3		STEP 4		STEP 5 · LIMIT			
	gr	fps	gr	fps	gr	fps	gr	fps	gr	fps	psi	Fill
Vihtavuori N570	83.7	2,555	86.0	2,615	88.3	2,680	90.7	2,745	93.0	2,810	64,800	103%
Hodgdon Retumbo	83.6	2,520	85.9	2,585	88.3	2,645	90.6	2,710	92.9	2,770	65,000	104%
Alliant Reloder 26	78.2	2,525	80.4	2,585	82.6	2,645	84.7	2,700	86.9	2,765	64,900	94%
Accurate MagPro	81.3	2,495	83.5	2,555	85.8	2,615	88.0	2,680	90.3	2,745	64,900	100%
Vihtavuori N568	84.4	2,475	86.8	2,540	89.1	2,605	91.5	2,675	93.8	2,740	63,800	105%
IMR 8133	84.1	2,480	86.4	2,545	88.8	2,610	91.1	2,670	93.4	2,735	62,200	105%
Ramshot Grand	81.2	2,485	83.5	2,545	85.7	2,605	88.0	2,670	90.2	2,730	64,900	99%
Alliant Reloder 22	75.3	2,485	77.4	2,540	79.5	2,595	81.6	2,655	83.7	2,715	64,900	96%
Hodgdon H1000	80.6	2,465	82.8	2,525	85.0	2,585	87.3	2,645	89.5	2,705	63,700	105%
IMR 7977	80.6	2,465	82.8	2,520	85.0	2,580	87.3	2,645	89.5	2,705	65,000	105%
Reload Swiss RS76	82.6	2,460	84.9	2,520	87.2	2,580	89.5	2,640	91.8	2,700	64,900	100%
Vihtavuori N565	76.9	2,470	79.0	2,525	81.2	2,585	83.3	2,640	85.4	2,695	64,900	97%
Reload Swiss RS62	72.3	2,465	74.3	2,520	76.3	2,575	78.3	2,635	80.3	2,690	65,000	90%
Alliant Reloder 25	78.7	2,450	80.9	2,510	83.1	2,570	85.2	2,625	87.4	2,685	64,900	103%
IMR 4831	72.0	2,450	74.0	2,510	76.0	2,565	78.0	2,620	80.0	2,675	64,800	93%
Ramshot Magnum	81.2	2,435	83.5	2,495	85.7	2,555	88.0	2,615	90.2	2,675	64,900	98%
Winchester StaBALL HD	82.2	2,435	84.5	2,495	86.8	2,555	89.0	2,615	91.3	2,675	64,800	101%
IMR 7828SSC	75.1	2,435	77.2	2,490	79.3	2,545	81.3	2,600	83.4	2,660	65,000	94%
Vihtavuori 24N41	84.1	2,385	86.4	2,445	88.8	2,510	91.1	2,570	93.4	2,635	64,900	103%
Vihtavuori N560	72.9	2,395	74.9	2,445	77.0	2,500	79.0	2,550	81.0	2,600	64,800	92%

.338 Ruger Compact Magnum

Ruger and Hornady jointly developed the .338 Ruger Compact Magnum (RCM). It was released in 2008 along with the .300 RCM. The goal was a .338-caliber cartridge with magnum performance that would fit a short-action rifle. It is based on the .375 Ruger case trimmed to 2.015 inches. Loaded rounds therefore have an overall length comparable to the .308 Winchester. The beltless rimless case has a .532-inch head. That is the same diameter as the belt of the H&H family. Unlike the Winchester Short Magnums (WSM) the case is not rebated. This allowed Ruger to chamber it without extensive changes to its M77 rifle.

Hornady's Superformance factory loads drive a 200-grain SST bullet at 2,950 fps and a 225-grain SST at 2,750 fps. The cartridge is intended for medium and large North American game. Its short case often permits a higher magazine capacity than the equivalent WSM chambering. Ruger has offered it in M77 Hawkeye rifles. Factory ammunition is produced mainly by Hornady.

Cartridge specifications	
Bullet Diameter	**0.338" (8.59 mm)**
Max Case Length	**2.015" (51.18 mm)**
Case Trim Length	**2.005" (50.93 mm)**
Max COAL	**2.840" (72.14 mm)**
Primer Pocket	**Large Rifle**
Standard Twist	**1:10"**
Case Capacity	**69.2 gr H_2O**
Max Pressure	**65,000 psi (SAAMI)**

185 gr Bullet · 25" barrel

COAL: 2.800" • Bullet length: 1.326" • Seat depth: 0.541" • Usable capacity: 57.5 / 69.2 gr H_2O

Powder	STEP 1 · 90%		STEP 2		STEP 3		STEP 4		STEP 5 · LIMIT			
	gr	fps	gr	fps	gr	fps	gr	fps	gr	fps	psi	Fill
Hodgdon Leverevolution	52.8	2,745	54.3	2,810	55.8	2,875	57.2	2,935	58.7	3,005	64,900	98%
Hodgdon BL-C(2)	54.1	2,710	55.6	2,775	57.1	2,840	58.6	2,905	60.1	2,975	64,700	105%
Accurate 2520	51.8	2,700	53.2	2,760	54.6	2,820	56.1	2,885	57.5	2,945	64,900	103%
Vihtavuori N140	51.9	2,660	53.4	2,725	54.8	2,785	56.3	2,850	57.7	2,910	64,900	102%
IMR 4895	50.9	2,655	52.3	2,715	53.8	2,780	55.2	2,845	56.6	2,905	64,900	102%
Norma 201	49.0	2,660	50.4	2,725	51.7	2,785	53.0	2,845	54.4	2,905	63,700	105%
Hodgdon CFE 223	53.3	2,645	54.8	2,710	56.3	2,775	57.7	2,835	59.2	2,900	62,200	105%
Vihtavuori N530	46.9	2,655	48.2	2,715	49.5	2,775	50.8	2,830	52.1	2,890	64,700	97%
Winchester 748	52.8	2,635	54.3	2,700	55.8	2,765	57.2	2,825	58.7	2,890	62,200	105%
Ramshot TAC	49.2	2,630	50.6	2,695	52.0	2,755	53.3	2,810	54.7	2,875	64,900	101%
Norma 202	49.9	2,635	51.3	2,695	52.6	2,750	54.0	2,810	55.4	2,870	64,800	105%
Alliant Power Pro Varmint	49.9	2,615	51.3	2,675	52.6	2,730	54.0	2,795	55.4	2,855	64,900	102%
Hodgdon H4895	49.1	2,615	50.5	2,680	51.8	2,735	53.1	2,790	54.5	2,850	64,900	98%
Norma 203B	49.9	2,610	51.3	2,670	52.6	2,730	54.0	2,790	55.4	2,850	64,900	105%
IMR 4064	50.4	2,605	51.8	2,665	53.2	2,725	54.6	2,785	56.0	2,845	64,900	104%
IMR 4320	50.5	2,600	51.9	2,660	53.3	2,720	54.7	2,785	56.1	2,845	65,000	98%
Hodgdon H335	49.0	2,605	50.4	2,665	51.7	2,725	53.0	2,780	54.4	2,840	64,800	94%
Reload Swiss RS50	51.7	2,590	53.1	2,650	54.5	2,710	56.0	2,770	57.4	2,835	62,200	105%
Hodgdon Benchmark	47.0	2,595	48.3	2,650	49.6	2,705	50.9	2,765	52.2	2,820	64,800	100%
Accurate 2460	48.0	2,565	49.3	2,620	50.6	2,675	52.0	2,735	53.3	2,795	64,800	93%

200 gr Bullet · 25" barrel

COAL: 2.820" • Bullet length: 1.212" • Seat depth: 0.407" • Usable capacity: 60.6 / 69.2 gr H_2O

Powder	STEP 1 · 90%		STEP 2		STEP 3		STEP 4		STEP 5 · LIMIT			
	gr	fps	gr	fps	gr	fps	gr	fps	gr	fps	psi	Fill
Hodgdon BL-C(2)	55.2	2,675	56.7	2,740	58.3	2,805	59.8	2,865	61.3	2,930	64,900	102%
Hodgdon Leverevolution	53.5	2,690	55.0	2,750	56.5	2,810	57.9	2,870	59.4	2,930	65,000	94%
Reload Swiss RS52	53.8	2,640	55.3	2,700	56.8	2,765	58.3	2,825	59.8	2,890	64,700	104%
Winchester 748	54.5	2,635	56.0	2,695	57.5	2,755	59.1	2,820	60.6	2,885	64,900	103%
Hodgdon CFE 223	54.9	2,635	56.4	2,695	58.0	2,760	59.5	2,820	61.0	2,880	64,900	103%
Norma 201	50.0	2,635	51.4	2,695	52.8	2,755	54.1	2,810	55.5	2,870	64,900	102%
Vihtavuori N540	52.9	2,625	54.4	2,685	55.8	2,740	57.3	2,800	58.8	2,860	64,900	103%
Accurate 2520	51.9	2,615	53.4	2,675	54.8	2,735	56.3	2,795	57.7	2,850	65,000	98%
Alliant TS 15.5	52.2	2,600	53.7	2,660	55.1	2,720	56.5	2,775	58.0	2,840	64,800	103%
Accurate 2700	56.2	2,585	57.8	2,645	59.3	2,710	60.9	2,775	62.4	2,835	64,000	105%
Hodgdon Varget	51.7	2,595	53.1	2,655	54.5	2,710	56.0	2,775	57.4	2,830	65,000	99%
Alliant Reloder 15	52.4	2,590	53.9	2,650	55.3	2,705	56.8	2,765	58.2	2,825	64,900	103%
Reload Swiss RS50	53.3	2,575	54.8	2,635	56.3	2,695	57.7	2,755	59.2	2,815	64,800	103%
Accurate 4064	51.6	2,555	53.0	2,610	54.5	2,670	55.9	2,730	57.3	2,785	62,200	105%
Alliant Power Pro Varmint	50.4	2,555	51.8	2,615	53.2	2,670	54.6	2,725	56.0	2,785	64,900	98%
IMR 4166	49.6	2,555	51.0	2,615	52.4	2,670	53.7	2,725	55.1	2,785	64,900	101%
Shooters World Precision Rifle	51.2	2,550	52.6	2,605	54.0	2,665	55.5	2,725	56.9	2,785	64,700	104%
IMR 4064	50.8	2,550	52.2	2,610	53.6	2,665	55.0	2,720	56.4	2,780	64,900	100%
Hodgdon H4895	49.4	2,550	50.8	2,610	52.1	2,660	53.5	2,720	54.9	2,775	64,800	94%
Hodgdon H335	49.5	2,545	50.9	2,600	52.3	2,660	53.6	2,710	55.0	2,770	64,900	90%

210 gr Bullet · 25" barrel

COAL: 2.830" • Bullet length: 1.352" • Seat depth: 0.537" • Usable capacity: 57.7 / 69.2 gr H_2O

Powder	STEP 1 · 90%		STEP 2		STEP 3		STEP 4		STEP 5 · LIMIT			
	gr	fps	gr	fps	gr	fps	gr	fps	gr	fps	psi	Fill
Hodgdon BL-C(2)	52.9	2,580	54.4	2,640	55.8	2,700	57.3	2,760	58.8	2,825	65,000	102%
Hodgdon Leverevolution	51.2	2,585	52.6	2,645	54.0	2,705	55.5	2,765	56.9	2,825	64,800	94%
Reload Swiss RS52	51.7	2,550	53.1	2,610	54.5	2,665	56.0	2,730	57.4	2,790	65,000	105%
Winchester 748	52.3	2,540	53.8	2,605	55.2	2,660	56.6	2,720	58.1	2,780	64,900	104%
Hodgdon CFE 223	52.6	2,535	54.0	2,595	55.5	2,655	57.0	2,715	58.4	2,775	64,700	103%
Norma 201	47.8	2,535	49.1	2,595	50.5	2,655	51.8	2,710	53.1	2,770	64,800	102%
Vihtavuori N540	50.7	2,530	52.1	2,585	53.5	2,640	54.9	2,700	56.3	2,755	64,800	104%
Accurate 2520	49.8	2,520	51.2	2,580	52.5	2,630	53.9	2,690	55.3	2,745	64,800	99%
Alliant TS 15.5	50.0	2,505	51.4	2,560	52.8	2,620	54.2	2,680	55.6	2,740	64,900	104%
Shooters World Match Rifle	49.8	2,510	51.2	2,570	52.5	2,625	53.9	2,680	55.3	2,740	64,900	99%
Vihtavuori N140	50.0	2,500	51.4	2,560	52.8	2,615	54.2	2,675	55.6	2,730	64,900	98%
Hodgdon Varget	49.4	2,495	50.8	2,555	52.1	2,610	53.5	2,665	54.9	2,725	64,800	99%
Alliant Reloder 15	50.1	2,495	51.5	2,550	52.9	2,605	54.3	2,665	55.7	2,720	64,700	103%
Accurate 2495	48.8	2,480	50.1	2,530	51.5	2,590	52.9	2,650	54.2	2,705	64,900	95%
Alliant Reloder 17	54.1	2,445	55.6	2,505	57.1	2,570	58.6	2,635	60.1	2,695	64,900	105%
Alliant Power Pro Varmint	48.2	2,455	49.6	2,515	50.9	2,570	52.3	2,625	53.6	2,680	64,700	98%
IMR 4166	47.5	2,460	48.8	2,515	50.1	2,565	51.5	2,625	52.8	2,680	65,000	102%
Hodgdon H4895	47.3	2,455	48.6	2,510	50.0	2,565	51.3	2,620	52.6	2,675	64,900	94%
IMR 4064	48.5	2,455	49.9	2,510	51.2	2,565	52.5	2,615	53.9	2,675	64,800	100%
Hodgdon H335	47.4	2,445	48.7	2,500	50.0	2,555	51.4	2,610	52.7	2,665	64,800	90%

225 gr Bullet · 25" barrel

COAL: 2.803" • Bullet length: 1.363" • Seat depth: 0.575" • Usable capacity: 56.7 / 69.2 gr H_2O

Powder	STEP 1 · 90%		STEP 2		STEP 3		STEP 4		STEP 5 · LIMIT			
	gr	fps	gr	fps	gr	fps	gr	fps	gr	fps	psi	Fill
Hodgdon BL-C(2)	51.5	2,480	52.9	2,540	54.4	2,600	55.8	2,660	57.2	2,715	64,800	101%
Hodgdon Leverevolution	49.7	2,480	51.1	2,540	52.5	2,595	53.8	2,650	55.2	2,705	64,800	93%
Reload Swiss RS52	50.2	2,450	51.6	2,505	53.0	2,565	54.4	2,620	55.8	2,680	64,800	103%
Winchester 748	50.9	2,445	52.3	2,505	53.7	2,560	55.1	2,620	56.5	2,675	64,900	102%
Hodgdon CFE 223	51.1	2,435	52.5	2,490	54.0	2,550	55.4	2,610	56.8	2,665	64,900	102%
Norma 201	46.4	2,440	47.7	2,495	49.0	2,550	50.2	2,600	51.5	2,660	64,700	101%
Accurate 2700	52.6	2,410	54.0	2,465	55.5	2,525	57.0	2,585	58.4	2,640	64,500	105%
Alliant TS 15.5	48.6	2,410	50.0	2,465	51.3	2,520	52.6	2,575	54.0	2,630	64,800	103%
Vihtavuori N540	48.9	2,415	50.3	2,470	51.6	2,520	52.9	2,570	54.3	2,630	64,700	102%
Hodgdon Varget	48.0	2,400	49.3	2,455	50.6	2,505	52.0	2,565	53.3	2,620	65,000	98%
Accurate 2520	48.1	2,405	49.4	2,455	50.8	2,515	52.1	2,565	53.4	2,615	64,700	97%
Alliant Reloder 17	52.7	2,365	54.2	2,430	55.7	2,490	57.1	2,550	58.6	2,610	64,900	104%
Alliant Reloder 15	48.4	2,385	49.8	2,440	51.1	2,495	52.4	2,545	53.8	2,605	64,800	101%
IMR 4320	47.9	2,370	49.2	2,425	50.5	2,480	51.9	2,535	53.2	2,590	64,800	94%
Shooters World Precision Rifle	47.5	2,355	48.8	2,405	50.1	2,460	51.5	2,520	52.8	2,570	64,700	103%
Alliant Power Pro Varmint	46.8	2,355	48.1	2,405	49.4	2,460	50.7	2,515	52.0	2,565	64,900	97%
IMR 4166	46.1	2,355	47.4	2,410	48.7	2,465	49.9	2,510	51.2	2,565	64,800	100%
Hodgdon H4895	45.8	2,350	47.1	2,405	48.3	2,450	49.6	2,505	50.9	2,560	64,900	93%
IMR 4064	46.9	2,350	48.2	2,400	49.5	2,455	50.8	2,505	52.1	2,560	64,700	98%
Norma 202	46.3	2,350	47.6	2,400	48.8	2,450	50.1	2,500	51.4	2,555	64,900	98%

250 gr Bullet · 25" barrel

COAL: 2.730" • Bullet length: 1.357" • Seat depth: 0.642" • Usable capacity: 55.5 / 69.2 gr H_2O

Powder	STEP 1 · 90%		STEP 2		STEP 3		STEP 4		STEP 5 · LIMIT			
	gr	fps	gr	fps	gr	fps	gr	fps	gr	fps	psi	Fill
Hodgdon BL-C(2)	49.6	2,345	51.0	2,400	52.4	2,455	53.7	2,505	55.1	2,565	64,900	100%
Ramshot Big Game	51.4	2,320	52.8	2,375	54.3	2,430	55.7	2,485	57.1	2,540	63,600	105%
Hodgdon Leverevolution	47.5	2,325	48.8	2,380	50.1	2,430	51.5	2,485	52.8	2,535	64,800	91%
Reload Swiss RS52	48.2	2,310	49.6	2,365	50.9	2,415	52.3	2,475	53.6	2,525	64,800	102%
Winchester 748	48.8	2,305	50.1	2,355	51.5	2,410	52.9	2,470	54.2	2,520	64,700	100%
Alliant Power Pro 2000-MR	49.9	2,295	51.3	2,350	52.6	2,400	54.0	2,460	55.4	2,515	64,300	105%
Hodgdon H414	51.4	2,295	52.8	2,350	54.3	2,405	55.7	2,460	57.1	2,515	62,700	105%
Hodgdon CFE 223	49.0	2,290	50.4	2,345	51.7	2,395	53.0	2,445	54.4	2,500	64,800	100%
Vihtavuori N550	49.9	2,295	51.3	2,345	52.6	2,395	54.0	2,450	55.4	2,500	64,100	105%
Winchester 760	50.9	2,260	52.3	2,315	53.8	2,370	55.2	2,425	56.6	2,480	63,100	105%
Hodgdon H380	49.3	2,250	50.7	2,305	52.0	2,355	53.4	2,410	54.8	2,465	62,300	105%
Accurate 4064	46.4	2,240	47.7	2,290	49.0	2,345	50.3	2,395	51.6	2,445	64,900	103%
Vihtavuori N540	46.4	2,250	47.7	2,300	49.0	2,350	50.2	2,395	51.5	2,445	64,800	99%
Vihtavuori N140	46.1	2,240	47.4	2,290	48.7	2,340	49.9	2,390	51.2	2,440	65,000	94%
Winchester StaBALL Match	46.7	2,235	48.0	2,285	49.3	2,335	50.6	2,385	51.9	2,440	63,300	105%
Alliant Reloder 15	46.1	2,235	47.4	2,290	48.7	2,340	49.9	2,385	51.2	2,435	64,900	99%
Accurate 2520	45.5	2,230	46.8	2,280	48.0	2,330	49.3	2,380	50.6	2,430	64,900	94%
IMR 4895	45.0	2,230	46.3	2,285	47.5	2,330	48.8	2,385	50.0	2,430	64,900	93%
IMR 4064	44.6	2,200	45.9	2,250	47.1	2,300	48.4	2,350	49.6	2,395	64,700	96%
Hodgdon H4895	43.7	2,200	44.9	2,245	46.1	2,295	47.3	2,345	48.5	2,390	65,000	91%

.338 Winchester Magnum

Winchester introduced the .338 Winchester Magnum in 1960 in the Model 70 Alaskan rifle. The rifle's name reflected the cartridge's intended use on large and potentially dangerous North American game. The cartridge is based on the belted .375 H&H Magnum case. The case was blown out, shortened to 2.500 inches and necked to accept .338-inch bullets. As a result it fits standard-length bolt actions.

Winchester's original factory loads used 200-grain bullets at about 3,000 fps, 250-grain bullets at about 2,700 fps and 300-grain bullets at about 2,450 fps. Modern hunters more often use bullets of 200 to 225 grains. This reflects improvements in bullet construction. The cartridge is widely used for elk, moose and large bears. Brown bear guides in Alaska commonly carry it as a backup chambering. It is also used for plains game in Africa. Rifles and factory ammunition remain widely available.

Cartridge specifications	
Bullet Diameter	**0.338" (8.59 mm)**
Max Case Length	**2.500" (63.50 mm)**
Case Trim Length	**2.490" (63.25 mm)**
Max COAL	**3.340" (84.84 mm)**
Primer Pocket	**Large Rifle**
Standard Twist	**1:10"**
Case Capacity	**85.9 gr H_2O**
Max Pressure	**64,000 psi (SAAMI)**

185 gr Bullet · 25" barrel

COAL: 3.290" • Bullet length: 1.295" • Seat depth: 0.505" • Usable capacity: 75.0 / 85.9 gr H_2O

Powder	STEP 1 · 90%		STEP 2		STEP 3		STEP 4		STEP 5 · LIMIT			
	gr	fps	gr	fps	gr	fps	gr	fps	gr	fps	psi	Fill
Reload Swiss RS60	67.9	2,890	69.8	2,960	71.7	3,035	73.5	3,105	75.4	3,175	64,000	104%
Hodgdon SUPERFORMANCE	71.3	2,875	73.3	2,950	75.3	3,025	77.2	3,095	79.2	3,170	64,000	103%
Hodgdon Leverevolution	60.8	2,905	62.5	2,970	64.2	3,035	65.8	3,095	67.5	3,160	63,900	86%
Reload Swiss RS52	61.7	2,880	63.4	2,945	65.2	3,015	66.9	3,080	68.6	3,145	64,000	96%
Vihtavuori N550	64.7	2,885	66.5	2,950	68.3	3,015	70.1	3,080	71.9	3,145	63,800	101%
Ramshot Big Game	65.4	2,875	67.2	2,940	69.1	3,010	70.9	3,075	72.7	3,140	64,000	99%
Hodgdon BL-C(2)	62.2	2,875	63.9	2,940	65.7	3,010	67.4	3,070	69.1	3,135	63,900	92%
IMR 4895	60.1	2,875	61.8	2,940	63.5	3,005	65.1	3,065	66.8	3,130	63,900	92%
Alliant Power Pro 2000-MR	64.0	2,860	65.8	2,930	67.5	2,990	69.3	3,060	71.1	3,125	63,800	100%
Hodgdon H4350	68.2	2,845	70.1	2,915	72.0	2,985	73.9	3,055	75.8	3,125	63,800	102%
Accurate 2700	64.5	2,820	66.3	2,885	68.1	2,955	69.9	3,020	71.7	3,090	63,800	97%
Alliant TS 15.5	59.9	2,830	61.6	2,895	63.3	2,960	64.9	3,025	66.6	3,090	63,800	96%
Hodgdon H414	65.3	2,825	67.1	2,890	68.9	2,955	70.7	3,020	72.5	3,090	64,000	99%
IMR 4064	59.8	2,835	61.5	2,900	63.1	2,960	64.8	3,020	66.4	3,080	63,900	95%
Alliant Reloder 17	65.4	2,795	67.2	2,865	69.1	2,935	70.9	3,005	72.7	3,075	63,900	97%
Winchester 760	65.3	2,805	67.1	2,870	68.9	2,935	70.7	3,000	72.5	3,070	63,900	99%
Accurate 4064	60.0	2,810	61.7	2,875	63.4	2,935	65.0	2,995	66.7	3,060	63,800	99%
IMR 4007 SSC	65.4	2,780	67.2	2,845	69.1	2,920	70.9	2,985	72.7	3,055	63,900	104%
Shooters World The Creed	59.2	2,790	60.9	2,850	62.5	2,910	64.2	2,975	65.8	3,035	63,800	91%
Shooters World Precision Rifle	58.8	2,780	60.4	2,840	62.0	2,900	63.7	2,960	65.3	3,025	63,900	97%

200 gr Bullet · 25" barrel

COAL: 3.300" • Bullet length: 1.264" • Seat depth: 0.464" • Usable capacity: 76.0 / 85.9 gr H_2O

Powder	STEP 1 · 90%		STEP 2		STEP 3		STEP 4		STEP 5 · LIMIT			
	gr	fps	gr	fps	gr	fps	gr	fps	gr	fps	psi	Fill
Reload Swiss RS60	67.3	2,815	69.2	2,885	71.0	2,955	72.9	3,025	74.8	3,095	63,800	101%
Hodgdon SUPERFORMANCE	70.7	2,810	72.7	2,880	74.7	2,950	76.6	3,020	78.6	3,090	63,900	101%
Hodgdon H4350	67.3	2,770	69.2	2,835	71.0	2,900	72.9	2,970	74.8	3,040	64,000	99%
Norma 204	67.1	2,765	69.0	2,830	70.8	2,895	72.7	2,965	74.6	3,035	63,900	103%
Hodgdon Leverevolution	59.7	2,785	61.4	2,850	63.0	2,905	64.7	2,970	66.3	3,030	63,800	83%
Ramshot Big Game	64.5	2,775	66.3	2,840	68.1	2,900	69.9	2,965	71.7	3,030	63,800	96%
Reload Swiss RS52	61.0	2,785	62.7	2,845	64.4	2,905	66.1	2,970	67.8	3,030	64,000	94%
Accurate 4350	67.1	2,760	69.0	2,825	70.8	2,890	72.7	2,955	74.6	3,025	63,800	103%
IMR 4350	66.9	2,765	68.8	2,830	70.6	2,895	72.5	2,960	74.3	3,025	62,000	105%
Alliant Power Pro 4000-MR	68.8	2,735	70.7	2,805	72.6	2,870	74.5	2,940	76.4	3,005	63,900	102%
Alliant Reloder 16	64.7	2,750	66.5	2,815	68.3	2,875	70.1	2,940	71.9	3,005	61,500	105%
Hodgdon H414	64.5	2,735	66.3	2,800	68.1	2,865	69.9	2,930	71.7	2,995	63,800	96%
Hodgdon H4831SC	71.3	2,705	73.3	2,775	75.3	2,845	77.2	2,915	79.2	2,985	63,300	105%
Winchester 760	64.6	2,720	66.4	2,785	68.2	2,850	70.0	2,910	71.8	2,975	64,000	97%
Hodgdon H380	62.7	2,720	64.5	2,785	66.2	2,845	68.0	2,905	69.7	2,970	63,800	97%
Alliant Reloder 15	59.4	2,730	61.0	2,790	62.7	2,850	64.3	2,905	66.0	2,965	63,900	93%
IMR 4064	58.7	2,725	60.3	2,785	62.0	2,845	63.6	2,900	65.2	2,960	63,800	92%
Vihtavuori N150	59.7	2,720	61.4	2,780	63.0	2,840	64.7	2,900	66.3	2,955	64,000	98%
IMR 4955	68.0	2,655	69.9	2,720	71.8	2,790	73.6	2,855	75.5	2,925	64,000	100%
Shooters World SW4350	66.2	2,670	68.0	2,735	69.8	2,795	71.7	2,865	73.5	2,925	63,200	105%

210 gr Bullet · 25" barrel

COAL: 3.280" • Bullet length: 1.313" • Seat depth: 0.533" • Usable capacity: 74.4 / 85.9 gr H_2O

Powder	STEP 1 · 90%		STEP 2		STEP 3		STEP 4		STEP 5 · LIMIT			
	gr	fps	gr	fps	gr	fps	gr	fps	gr	fps	psi	Fill
Reload Swiss RS60	65.7	2,745	67.5	2,810	69.3	2,875	71.2	2,945	73.0	3,015	63,800	101%
Hodgdon SUPERFORMANCE	69.0	2,735	70.9	2,805	72.8	2,870	74.8	2,940	76.7	3,010	63,800	101%
Hodgdon H4350	65.5	2,695	67.3	2,760	69.2	2,825	71.0	2,890	72.8	2,955	63,900	99%
IMR 4350	65.4	2,695	67.2	2,760	69.1	2,825	70.9	2,890	72.7	2,955	62,800	105%
Norma 204	65.5	2,690	67.3	2,750	69.2	2,820	71.0	2,885	72.8	2,950	63,900	103%
Accurate 4350	65.5	2,685	67.3	2,750	69.2	2,815	71.0	2,880	72.8	2,945	63,900	102%
Ramshot Big Game	62.9	2,695	64.7	2,755	66.4	2,815	68.2	2,880	69.9	2,940	63,900	96%
Reload Swiss RS52	59.4	2,695	61.0	2,755	62.7	2,815	64.3	2,875	66.0	2,940	63,800	93%
Alliant Power Pro 4000-MR	67.1	2,665	69.0	2,730	70.8	2,795	72.7	2,860	74.6	2,930	63,900	102%
Alliant Power Pro 2000-MR	61.6	2,685	63.3	2,745	65.0	2,805	66.7	2,865	68.4	2,925	63,800	97%
Hodgdon H4831SC	69.8	2,645	71.8	2,715	73.7	2,780	75.6	2,850	77.6	2,920	64,000	105%
Hodgdon H414	62.9	2,660	64.7	2,720	66.4	2,780	68.2	2,845	69.9	2,910	63,800	96%
Vihtavuori N550	61.2	2,675	62.9	2,730	64.6	2,790	66.3	2,850	68.0	2,905	63,800	96%
Accurate 2700	62.3	2,655	64.0	2,715	65.8	2,780	67.5	2,840	69.2	2,900	63,700	95%
Winchester 760	63.0	2,645	64.8	2,710	66.5	2,770	68.3	2,830	70.0	2,895	64,000	97%
IMR 4451	63.6	2,630	65.4	2,695	67.2	2,760	68.9	2,820	70.7	2,885	63,800	99%
IMR 4064	57.1	2,640	58.7	2,700	60.3	2,755	61.8	2,810	63.4	2,865	63,900	91%
Accurate 4064	57.5	2,620	59.1	2,680	60.7	2,735	62.3	2,795	63.9	2,850	63,900	95%
IMR 4955	66.3	2,585	68.2	2,655	70.0	2,720	71.8	2,785	73.7	2,850	64,000	100%
Shooters World Long Rifle	59.8	2,590	61.5	2,650	63.1	2,705	64.8	2,765	66.4	2,825	63,900	98%

225 gr Bullet · 25" barrel

COAL: 3.320" • Bullet length: 1.382" • Seat depth: 0.562" • Usable capacity: 73.7 / 85.9 gr H_2O

Powder	STEP 1 · 90%		STEP 2		STEP 3		STEP 4		STEP 5 · LIMIT			
	gr	fps	gr	fps	gr	fps	gr	fps	gr	fps	psi	Fill
Hodgdon SUPERFORMANCE	67.6	2,660	69.5	2,725	71.3	2,785	73.2	2,855	75.1	2,920	63,800	100%
Reload Swiss RS60	64.4	2,665	66.2	2,730	68.0	2,795	69.7	2,855	71.5	2,920	63,900	100%
Reload Swiss RS70	69.0	2,645	70.9	2,710	72.8	2,775	74.8	2,845	76.7	2,915	60,700	105%
Reload Swiss RS62	66.9	2,635	68.8	2,700	70.6	2,765	72.5	2,830	74.3	2,895	60,700	105%
IMR 4350	64.2	2,620	66.0	2,685	67.8	2,745	69.5	2,805	71.3	2,870	63,800	104%
Norma URP	63.5	2,605	65.3	2,670	67.0	2,730	68.8	2,795	70.5	2,860	62,500	105%
Hodgdon H4350	63.8	2,605	65.6	2,670	67.3	2,730	69.1	2,790	70.9	2,855	63,900	97%
Norma 204	64.2	2,605	66.0	2,670	67.8	2,730	69.5	2,790	71.3	2,855	63,900	102%
Accurate 4350	64.1	2,605	65.9	2,665	67.7	2,730	69.4	2,790	71.2	2,850	64,000	101%
Ramshot Hunter	65.5	2,600	67.3	2,660	69.2	2,725	71.0	2,790	72.8	2,850	62,200	105%
Ramshot Big Game	61.3	2,595	63.0	2,655	64.7	2,710	66.4	2,770	68.1	2,830	63,800	94%
IMR 4831	64.8	2,560	66.6	2,620	68.4	2,685	70.2	2,750	72.0	2,815	60,600	105%
Winchester StaBALL 6.5	62.5	2,585	64.2	2,640	66.0	2,700	67.7	2,760	69.4	2,815	64,000	95%
IMR 4451	62.3	2,550	64.0	2,610	65.8	2,675	67.5	2,735	69.2	2,795	63,900	98%
Winchester 760	61.6	2,560	63.3	2,615	65.0	2,675	66.7	2,735	68.4	2,795	64,000	95%
Alliant Reloder 19	65.5	2,535	67.3	2,600	69.2	2,665	71.0	2,730	72.8	2,790	61,100	105%
Hodgdon CFE 223	58.6	2,560	60.2	2,615	61.8	2,670	63.5	2,730	65.1	2,785	64,000	90%
Vihtavuori N550	59.2	2,560	60.9	2,620	62.5	2,670	64.2	2,730	65.8	2,785	63,900	94%
Hodgdon H380	59.4	2,540	61.0	2,595	62.7	2,650	64.3	2,705	66.0	2,765	63,900	95%
Shooters World SW4350	63.5	2,525	65.3	2,585	67.0	2,645	68.8	2,705	70.5	2,765	64,000	104%

250 gr Bullet · 25" barrel

COAL: 3.310" • Bullet length: 1.550" • Seat depth: 0.741" • Usable capacity: 70.0 / 85.9 gr H_2O

Powder	STEP 1 · 90%		STEP 2		STEP 3		STEP 4		STEP 5 · LIMIT			
	gr	fps	gr	fps	gr	fps	gr	fps	gr	fps	psi	Fill
Reload Swiss RS70	65.5	2,510	67.3	2,570	69.2	2,635	71.0	2,700	72.8	2,765	61,500	105%
Hodgdon SUPERFORMANCE	63.9	2,510	65.7	2,570	67.5	2,630	69.2	2,690	71.0	2,755	63,800	99%
Reload Swiss RS60	60.8	2,515	62.5	2,570	64.2	2,635	65.9	2,695	67.6	2,755	63,900	99%
Reload Swiss RS62	63.5	2,500	65.3	2,560	67.0	2,620	68.8	2,685	70.6	2,750	61,500	105%
Vihtavuori N555	61.6	2,500	63.3	2,555	65.0	2,615	66.7	2,670	68.4	2,730	61,500	105%
Norma URP	60.2	2,475	61.9	2,540	63.6	2,600	65.2	2,655	66.9	2,715	63,500	105%
IMR 4350	60.3	2,460	62.0	2,520	63.6	2,575	65.3	2,635	67.0	2,695	63,800	103%
Ramshot Hunter	62.2	2,460	63.9	2,520	65.7	2,580	67.4	2,640	69.1	2,695	62,900	105%
Accurate 4350	60.5	2,455	62.2	2,510	63.9	2,570	65.5	2,625	67.2	2,685	64,000	100%
Hodgdon H4350	59.9	2,450	61.6	2,510	63.3	2,565	64.9	2,625	66.6	2,680	63,900	96%
Hodgdon H4831SC	64.6	2,435	66.4	2,495	68.2	2,555	70.0	2,615	71.8	2,680	63,800	103%
Alliant Power Pro 4000-MR	62.1	2,435	63.8	2,495	65.5	2,550	67.3	2,615	69.0	2,675	63,800	100%
IMR 7828	65.6	2,430	67.4	2,490	69.3	2,555	71.1	2,615	72.9	2,675	63,900	105%
IMR 4831	61.6	2,430	63.3	2,490	65.0	2,550	66.7	2,610	68.4	2,670	61,200	105%
Alliant Reloder 19	62.2	2,415	63.9	2,470	65.7	2,535	67.4	2,595	69.1	2,650	61,800	105%
Reload Swiss RS52	54.6	2,430	56.1	2,485	57.7	2,540	59.2	2,590	60.7	2,645	63,900	91%
Winchester StaBALL 6.5	58.9	2,420	60.5	2,475	62.2	2,530	63.8	2,585	65.4	2,640	63,900	94%
IMR 4955	61.4	2,385	63.1	2,440	64.8	2,500	66.5	2,560	68.2	2,620	63,900	98%
Alliant TS 15.5	52.9	2,390	54.4	2,445	55.8	2,495	57.3	2,545	58.8	2,600	63,800	91%
Shooters World SW4350	59.9	2,370	61.5	2,425	63.2	2,480	64.8	2,535	66.5	2,595	63,900	103%

265 gr Bullet · 25" barrel

COAL: 3.340" • Bullet length: 1.508" • Seat depth: 0.668" • Usable capacity: 71.5 / 85.9 gr H_2O

Powder	STEP 1 · 90%		STEP 2		STEP 3		STEP 4		STEP 5 · LIMIT			
	gr	fps	gr	fps	gr	fps	gr	fps	gr	fps	psi	Fill
Reload Swiss RS70	66.4	2,485	68.3	2,550	70.1	2,610	72.0	2,675	73.8	2,735	63,900	104%
Reload Swiss RS62	64.4	2,475	66.2	2,535	68.0	2,600	69.8	2,660	71.6	2,720	63,900	104%
Alliant Reloder 26	67.3	2,445	69.2	2,505	71.0	2,565	72.9	2,630	74.8	2,695	61,100	105%
Hodgdon SUPERFORMANCE	63.7	2,450	65.5	2,505	67.3	2,565	69.0	2,625	70.8	2,685	63,800	97%
Reload Swiss RS60	60.8	2,455	62.5	2,515	64.2	2,570	65.8	2,625	67.5	2,685	64,000	97%
Vihtavuori N555	61.4	2,445	63.1	2,500	64.8	2,560	66.5	2,615	68.2	2,670	64,000	102%
Hodgdon Hybrid 100V	60.2	2,425	61.9	2,480	63.6	2,540	65.2	2,595	66.9	2,655	60,700	105%
IMR 4831	62.6	2,415	64.3	2,470	66.1	2,535	67.8	2,590	69.6	2,655	63,900	104%
Ramshot Hunter	62.4	2,410	64.1	2,465	65.8	2,520	67.6	2,580	69.3	2,640	63,900	103%
Winchester Supreme 780	66.2	2,400	68.0	2,460	69.8	2,515	71.7	2,580	73.5	2,640	63,900	103%
Norma MRP	64.8	2,390	66.6	2,450	68.4	2,505	70.2	2,565	72.0	2,625	63,800	105%
Norma 204	60.6	2,390	62.3	2,445	64.0	2,505	65.6	2,555	67.3	2,615	64,000	99%
IMR 4350	59.9	2,390	61.5	2,445	63.2	2,500	64.8	2,555	66.5	2,610	64,000	100%
IMR 7828	65.3	2,375	67.1	2,435	68.9	2,495	70.7	2,555	72.5	2,610	63,900	102%
IMR 7828SSC	65.0	2,370	66.8	2,425	68.6	2,485	70.4	2,545	72.2	2,605	61,200	105%
Hodgdon H4350	59.4	2,380	61.0	2,430	62.7	2,490	64.3	2,545	66.0	2,600	63,800	93%
IMR 4007 SSC	58.2	2,340	59.8	2,395	61.5	2,450	63.1	2,505	64.7	2,560	63,800	97%
IMR 4451	58.6	2,335	60.2	2,390	61.8	2,445	63.5	2,500	65.1	2,555	63,800	95%
IMR 4955	61.3	2,330	63.0	2,385	64.7	2,445	66.4	2,500	68.1	2,555	63,800	96%
Ramshot Big Game	57.2	2,345	58.8	2,400	60.4	2,455	61.9	2,505	63.5	2,555	63,900	90%

300 gr Bullet · 25" barrel

COAL: 3.330" • Bullet length: 1.780" • Seat depth: 0.950" • Usable capacity: 65.5 / 85.9 gr H_2O

Powder	STEP 1 · 90%		STEP 2		STEP 3		STEP 4		STEP 5 · LIMIT			
	gr	fps	gr	fps	gr	fps	gr	fps	gr	fps	psi	Fill
Reload Swiss RS70	60.9	2,295	62.6	2,355	64.3	2,410	66.0	2,470	67.7	2,525	63,800	104%
Reload Swiss RS62	59.2	2,290	60.9	2,350	62.5	2,400	64.2	2,460	65.8	2,515	63,800	104%
Alliant Reloder 26	61.7	2,265	63.4	2,320	65.1	2,375	66.8	2,430	68.5	2,490	60,600	105%
Hodgdon SUPERFORMANCE	58.6	2,265	60.2	2,315	61.8	2,370	63.5	2,425	65.1	2,480	63,800	97%
Reload Swiss RS60	55.8	2,265	57.3	2,315	58.9	2,370	60.5	2,425	62.0	2,480	64,000	97%
Vihtavuori N555	56.1	2,255	57.6	2,305	59.2	2,360	60.8	2,410	62.3	2,460	63,800	102%
Norma URP	55.1	2,245	56.6	2,295	58.2	2,350	59.7	2,405	61.2	2,455	64,000	102%
Winchester Supreme 780	60.8	2,225	62.5	2,280	64.2	2,335	65.8	2,390	67.5	2,445	63,900	104%
Alliant Reloder 19	57.9	2,220	59.5	2,270	61.1	2,325	62.7	2,380	64.3	2,435	64,000	104%
Ramshot Hunter	57.2	2,220	58.8	2,270	60.4	2,325	62.0	2,375	63.6	2,430	63,800	103%
Hodgdon H4831SC	59.3	2,205	61.0	2,260	62.6	2,310	64.3	2,365	65.9	2,420	63,800	101%
IMR 7828	59.7	2,200	61.4	2,255	63.0	2,305	64.7	2,360	66.3	2,415	63,900	102%
IMR 7828SSC	59.5	2,190	61.1	2,245	62.8	2,300	64.4	2,350	66.1	2,410	61,300	105%
Accurate 4350	55.2	2,200	56.7	2,250	58.3	2,300	59.8	2,350	61.3	2,400	63,900	98%
IMR 4350	54.6	2,195	56.1	2,245	57.7	2,295	59.2	2,345	60.7	2,400	63,900	99%
Hodgdon H4350	54.3	2,190	55.8	2,240	57.3	2,290	58.8	2,340	60.3	2,390	63,900	93%
Vihtavuori N160	56.5	2,185	58.1	2,240	59.6	2,285	61.2	2,340	62.8	2,390	63,900	104%
IMR 4955	56.3	2,155	57.9	2,210	59.5	2,265	61.0	2,315	62.6	2,365	64,000	96%
Accurate 3100	57.1	2,150	58.7	2,200	60.3	2,255	61.8	2,305	63.4	2,360	61,200	105%
IMR 4007 SSC	53.5	2,160	55.0	2,210	56.5	2,260	57.9	2,310	59.4	2,360	64,000	97%

.338-06

The .338-06 is formed by necking the .30-06 Springfield case up to accept .338-inch bullets without other changes. It is similar in concept to the older .333 OKH wildcat and to the .35 Whelen. Both of those also use the .30-06 case. The .338 Winchester Magnum arrived in 1958 and brought a wider selection of .338-inch bullets. That increased interest among handloaders. Even so the .338-06 remained a wildcat for decades. A-Square adopted it as the .338-06 A-Square around 1998 and submitted it to SAAMI for standardization.

Bullets range from about 180 grains for deer and pronghorn to 225 and 250 grains for elk, moose and bears. The .338-06 offers much of the performance of the .338 Winchester Magnum with less recoil and more efficient use of powder. It also uses readily available .30-06 brass. It shares the .30-06 case head. A rifle can often be converted with a barrel change as a result. Weatherby offered factory ammunition and for a time rifles. The cartridge remains primarily a handloader's round.

Cartridge specifications	
Bullet Diameter	**0.338" (8.59 mm)**
Max Case Length	**2.480" (63.00 mm)**
Case Trim Length	**2.470" (62.74 mm)**
Max COAL	**3.350" (85.09 mm)**
Primer Pocket	**Large Rifle**
Standard Twist	**1:10"**
Case Capacity	**68.0 gr H_2O**
Max Pressure	**65,000 psi (SAAMI)**

185 gr Bullet · 25" barrel

COAL: 3.250" • Bullet length: 1.295" • Seat depth: 0.526" • Usable capacity: 56.7 / 68.0 gr H_2O

Powder	STEP 1 · 90%		STEP 2		STEP 3		STEP 4		STEP 5 · LIMIT			
	gr	fps	gr	fps	gr	fps	gr	fps	gr	fps	psi	Fill
Hodgdon Leverevolution	53.1	2,785	54.6	2,850	56.0	2,915	57.5	2,980	59.0	3,050	65,000	99%
Hodgdon BL-C(2)	53.4	2,705	54.9	2,770	56.3	2,835	57.8	2,900	59.3	2,970	64,500	105%
Vihtavuori N140	52.2	2,700	53.7	2,765	55.1	2,830	56.5	2,890	58.0	2,955	64,800	104%
Shooters World Match Rifle	51.4	2,685	52.8	2,750	54.3	2,815	55.7	2,880	57.1	2,940	64,800	104%
Vihtavuori N530	47.4	2,705	48.7	2,765	50.0	2,820	51.4	2,885	52.7	2,940	64,700	100%
Hodgdon Varget	51.3	2,680	52.7	2,740	54.1	2,805	55.6	2,870	57.0	2,935	65,000	105%
Ramshot TAC	49.5	2,675	50.9	2,735	52.3	2,800	53.6	2,855	55.0	2,920	64,800	103%
IMR 4895	50.5	2,665	51.9	2,725	53.3	2,790	54.7	2,850	56.1	2,910	65,000	102%
Accurate 2520	50.3	2,665	51.7	2,725	53.1	2,785	54.5	2,845	55.9	2,905	64,900	101%
Hodgdon H4895	49.5	2,665	50.9	2,725	52.3	2,785	53.6	2,845	55.0	2,905	65,000	100%
Shooters World The Creed	51.5	2,655	52.9	2,715	54.4	2,780	55.8	2,845	57.2	2,905	64,800	105%
Alliant Power Pro Varmint	50.1	2,655	51.5	2,715	52.9	2,775	54.3	2,840	55.7	2,900	64,800	104%
Vihtavuori N135	49.3	2,665	50.7	2,725	52.0	2,780	53.4	2,840	54.8	2,900	62,900	105%
IMR 3031	47.4	2,635	48.7	2,695	50.0	2,750	51.4	2,815	52.7	2,875	64,900	99%
Norma 202	49.3	2,635	50.7	2,695	52.0	2,755	53.4	2,815	54.8	2,875	61,800	105%
Hodgdon Benchmark	47.3	2,635	48.6	2,695	49.9	2,750	51.2	2,810	52.5	2,865	64,800	102%
IMR 4064	50.0	2,615	51.4	2,675	52.8	2,735	54.2	2,795	55.6	2,855	64,000	105%
IMR 4320	50.0	2,605	51.4	2,665	52.8	2,730	54.1	2,785	55.5	2,850	64,700	99%
Vihtavuori N133	45.8	2,605	47.1	2,660	48.3	2,715	49.6	2,770	50.9	2,830	64,900	103%
Accurate 2495	47.6	2,530	48.9	2,590	50.3	2,650	51.6	2,705	52.9	2,765	64,900	94%

200 gr Bullet · 25" barrel

COAL: 3.310" • Bullet length: 1.316" • Seat depth: 0.486" • Usable capacity: 57.5 / 68.0 gr H_2O

Powder	STEP 1 · 90%		STEP 2		STEP 3		STEP 4		STEP 5 · LIMIT			
	gr	fps	gr	fps	gr	fps	gr	fps	gr	fps	psi	Fill
Hodgdon Leverevolution	52.5	2,690	54.0	2,755	55.4	2,815	56.8	2,875	58.3	2,940	64,700	97%
Hodgdon BL-C(2)	53.2	2,635	54.7	2,700	56.2	2,765	57.6	2,825	59.1	2,890	65,000	103%
Norma 201	49.0	2,630	50.4	2,690	51.7	2,750	53.0	2,810	54.4	2,870	64,500	105%
Winchester 748	52.8	2,605	54.3	2,665	55.8	2,730	57.2	2,790	58.7	2,855	62,700	105%
Shooters World Match Rifle	50.9	2,600	52.3	2,660	53.8	2,725	55.2	2,785	56.6	2,845	64,800	101%
Vihtavuori N140	51.4	2,605	52.8	2,665	54.3	2,725	55.7	2,785	57.1	2,845	64,700	101%
Hodgdon Varget	50.8	2,600	52.2	2,660	53.6	2,720	55.0	2,780	56.4	2,840	64,900	102%
Alliant Reloder 15	50.9	2,565	52.3	2,625	53.7	2,685	55.1	2,740	56.5	2,800	61,700	105%
IMR 4895	49.6	2,565	51.0	2,625	52.4	2,685	53.7	2,740	55.1	2,800	64,700	99%
Vihtavuori N135	48.9	2,575	50.3	2,635	51.6	2,690	52.9	2,745	54.3	2,800	64,900	102%
Alliant Power Pro Varmint	49.6	2,565	51.0	2,625	52.4	2,680	53.7	2,735	55.1	2,795	65,000	101%
Hodgdon H4895	48.8	2,565	50.1	2,620	51.5	2,680	52.9	2,740	54.2	2,795	64,800	98%
Reload Swiss RS50	51.8	2,555	53.2	2,615	54.6	2,675	56.1	2,735	57.5	2,795	63,100	105%
Accurate 2520	49.4	2,555	50.8	2,615	52.1	2,670	53.5	2,725	54.9	2,785	64,800	98%
Reload Swiss RS40	46.3	2,565	47.6	2,620	48.8	2,675	50.1	2,730	51.4	2,785	64,800	95%
Alliant AR-Comp	47.3	2,550	48.6	2,605	49.9	2,660	51.2	2,715	52.5	2,770	64,800	98%
IMR 3031	46.8	2,540	48.1	2,595	49.4	2,650	50.7	2,710	52.0	2,765	64,700	96%
IMR 4064	49.5	2,535	50.9	2,595	52.3	2,655	53.6	2,705	55.0	2,765	64,800	102%
IMR 8208 XBR	47.2	2,520	48.5	2,575	49.8	2,630	51.1	2,685	52.4	2,740	64,800	99%
Accurate 2495	47.2	2,455	48.5	2,510	49.8	2,565	51.1	2,620	52.4	2,675	65,000	92%

210 gr Bullet · 25" barrel

COAL: 3.240" • Bullet length: 1.274" • Seat depth: 0.514" • Usable capacity: 56.9 / 68.0 gr H_2O

Powder	STEP 1 · 90%		STEP 2		STEP 3		STEP 4		STEP 5 · LIMIT			
	gr	fps	gr	fps	gr	fps	gr	fps	gr	fps	psi	Fill
Hodgdon Leverevolution	51.5	2,615	52.9	2,670	54.4	2,735	55.8	2,795	57.2	2,855	64,900	96%
Hodgdon BL-C(2)	52.2	2,560	53.7	2,625	55.1	2,685	56.5	2,745	58.0	2,810	64,800	102%
Norma 201	48.1	2,560	49.4	2,620	50.8	2,680	52.1	2,735	53.4	2,795	64,800	104%
Winchester 748	52.3	2,555	53.8	2,615	55.2	2,675	56.6	2,735	58.1	2,795	64,300	105%
Reload Swiss RS52	51.1	2,535	52.5	2,595	54.0	2,660	55.4	2,720	56.8	2,780	62,500	105%
Shooters World Match Rifle	50.0	2,530	51.4	2,590	52.8	2,650	54.1	2,705	55.5	2,765	64,700	100%
Vihtavuori N540	50.6	2,540	52.0	2,595	53.4	2,650	54.8	2,710	56.2	2,765	63,400	105%
Hodgdon Varget	49.7	2,520	51.1	2,580	52.5	2,640	53.8	2,695	55.2	2,755	64,700	101%
Alliant Reloder 15	50.3	2,510	51.7	2,570	53.1	2,625	54.5	2,685	55.9	2,745	63,800	105%
Ramshot TAC	48.1	2,505	49.4	2,560	50.8	2,620	52.1	2,675	53.4	2,730	64,900	100%
Shooters World The Creed	50.0	2,500	51.4	2,560	52.8	2,620	54.1	2,675	55.5	2,730	65,000	101%
IMR 4895	48.5	2,485	49.9	2,545	51.2	2,600	52.5	2,655	53.9	2,715	65,000	98%
Alliant Power Pro Varmint	48.5	2,480	49.9	2,540	51.2	2,595	52.5	2,650	53.9	2,710	64,800	100%
Hodgdon H4895	47.7	2,485	49.0	2,540	50.4	2,595	51.7	2,650	53.0	2,705	64,800	96%
Norma 202	48.2	2,485	49.5	2,540	50.9	2,595	52.2	2,650	53.5	2,705	64,800	102%
Reload Swiss RS40	45.3	2,480	46.5	2,530	47.8	2,585	49.0	2,640	50.3	2,695	64,700	94%
Accurate 2520	48.2	2,470	49.6	2,525	50.9	2,580	52.3	2,635	53.6	2,690	64,700	97%
Alliant Reloder 17	53.6	2,435	55.1	2,495	56.5	2,555	58.0	2,620	59.5	2,685	62,600	105%
IMR 4064	48.4	2,460	49.8	2,520	51.1	2,570	52.4	2,625	53.8	2,685	64,900	101%
IMR 4320	48.7	2,455	50.1	2,515	51.4	2,570	52.8	2,630	54.1	2,685	64,700	96%

225 gr Bullet · 25" barrel

COAL: 3.240" • Bullet length: 1.418" • Seat depth: 0.658" • Usable capacity: 53.9 / 68.0 gr H_2O

Powder	STEP 1 · 90%		STEP 2		STEP 3		STEP 4		STEP 5 · LIMIT			
	gr	fps	gr	fps	gr	fps	gr	fps	gr	fps	psi	Fill
Hodgdon Leverevolution	48.9	2,485	50.3	2,545	51.6	2,600	52.9	2,655	54.3	2,715	64,800	96%
Hodgdon BL-C(2)	49.6	2,440	51.0	2,500	52.4	2,560	53.7	2,615	55.1	2,675	64,700	103%
Norma 201	45.6	2,440	46.9	2,495	48.2	2,555	49.4	2,610	50.7	2,665	65,000	104%
Winchester 748	49.5	2,425	50.9	2,485	52.3	2,545	53.6	2,600	55.0	2,660	63,600	105%
Reload Swiss RS52	48.4	2,410	49.8	2,470	51.1	2,525	52.4	2,580	53.8	2,640	61,900	105%
Shooters World Match Rifle	47.5	2,410	48.8	2,465	50.1	2,520	51.5	2,580	52.8	2,635	64,900	101%
Hodgdon Varget	47.2	2,405	48.5	2,460	49.8	2,515	51.1	2,570	52.4	2,625	64,900	101%
Vihtavuori N540	47.9	2,410	49.2	2,465	50.5	2,515	51.9	2,575	53.2	2,625	63,200	105%
Vihtavuori N140	47.6	2,400	48.9	2,450	50.3	2,510	51.6	2,565	52.9	2,620	64,700	100%
Alliant Reloder 15	47.6	2,390	48.9	2,440	50.3	2,500	51.6	2,555	52.9	2,610	63,600	105%
Reload Swiss RS50	48.4	2,365	49.8	2,425	51.1	2,480	52.4	2,530	53.8	2,590	63,800	105%
Vihtavuori N530	42.8	2,385	44.0	2,440	45.1	2,485	46.3	2,540	47.5	2,590	65,000	95%
IMR 4895	46.0	2,370	47.3	2,420	48.5	2,475	49.8	2,525	51.1	2,580	65,000	98%
Hodgdon H4895	45.3	2,365	46.5	2,415	47.8	2,470	49.0	2,520	50.3	2,575	65,000	97%
Norma 202	45.6	2,355	46.9	2,410	48.2	2,465	49.4	2,515	50.7	2,570	64,900	102%
Accurate 2520	45.8	2,350	47.1	2,400	48.3	2,450	49.6	2,505	50.9	2,560	64,700	97%
IMR 4064	45.8	2,340	47.1	2,395	48.3	2,445	49.6	2,495	50.9	2,550	64,900	101%
IMR 3031	43.4	2,335	44.6	2,385	45.8	2,440	47.0	2,490	48.2	2,545	64,800	96%
Alliant AR-Comp	43.7	2,330	44.9	2,385	46.1	2,435	47.3	2,485	48.5	2,535	64,700	96%
Hodgdon Benchmark	42.9	2,320	44.1	2,370	45.3	2,420	46.5	2,475	47.7	2,525	64,800	98%

250 gr Bullet · 25" barrel

COAL: 3.300" • Bullet length: 1.550" • Seat depth: 0.730" • Usable capacity: 52.2 / 68.0 gr H_2O

Powder	STEP 1 · 90%		STEP 2		STEP 3		STEP 4		STEP 5 · LIMIT			
	gr	fps	gr	fps	gr	fps	gr	fps	gr	fps	psi	Fill
Hodgdon Leverevolution	46.5	2,325	47.8	2,380	49.1	2,435	50.4	2,490	51.7	2,545	64,700	95%
Hodgdon BL-C(2)	47.5	2,300	48.8	2,355	50.1	2,405	51.5	2,465	52.8	2,520	64,900	101%
Reload Swiss RS52	47.0	2,300	48.3	2,355	49.6	2,410	50.9	2,460	52.2	2,515	64,400	105%
Winchester 748	47.6	2,300	48.9	2,350	50.3	2,410	51.6	2,465	52.9	2,515	64,700	104%
Norma 201	43.4	2,290	44.6	2,345	45.8	2,395	47.0	2,450	48.2	2,500	64,800	102%
Alliant TS 15.5	45.5	2,265	46.8	2,315	48.0	2,365	49.3	2,420	50.6	2,475	64,800	105%
Shooters World Match Rifle	45.4	2,265	46.6	2,315	47.9	2,370	49.1	2,420	50.4	2,475	64,900	99%
Hodgdon Varget	44.9	2,255	46.1	2,305	47.4	2,355	48.6	2,405	49.9	2,460	65,000	99%
Vihtavuori N540	45.6	2,255	46.9	2,310	48.2	2,360	49.4	2,410	50.7	2,460	64,700	103%
Alliant Reloder 15	45.5	2,250	46.8	2,305	48.0	2,350	49.3	2,405	50.5	2,455	65,000	103%
Vihtavuori N140	45.2	2,245	46.5	2,295	47.7	2,345	49.0	2,400	50.2	2,450	64,800	98%
Reload Swiss RS50	46.5	2,230	47.8	2,285	49.1	2,335	50.4	2,390	51.7	2,445	64,800	104%
Shooters World Precision Rifle	44.4	2,210	45.6	2,260	46.8	2,310	48.1	2,360	49.3	2,415	64,700	105%
IMR 4320	44.3	2,205	45.5	2,255	46.8	2,310	48.0	2,360	49.2	2,410	64,900	95%
Hodgdon H4895	42.9	2,205	44.1	2,255	45.3	2,305	46.5	2,355	47.7	2,405	64,900	95%
IMR 4895	43.5	2,210	44.7	2,260	45.9	2,310	47.1	2,355	48.3	2,405	64,800	96%
Vihtavuori N530	40.2	2,215	41.3	2,260	42.5	2,315	43.6	2,360	44.7	2,405	64,900	92%
Norma 202	43.2	2,195	44.4	2,245	45.6	2,295	46.8	2,340	48.0	2,390	65,000	100%
IMR 4064	43.4	2,190	44.6	2,235	45.8	2,285	47.0	2,335	48.2	2,385	64,800	99%
Accurate 2520	43.4	2,185	44.6	2,235	45.8	2,285	47.0	2,330	48.2	2,380	65,000	95%

.338-378 Weatherby Magnum

The .338-378 Weatherby Magnum descends from the .338-378 KT. Elmer Keith and R.W. Thomson created that wildcat in 1966. The KT was based on the belted .378 Weatherby Magnum case shortened by a quarter inch and necked down to .338 caliber. It was intended for elk hunting with the slow-burning powders available at the time. In 1998 Weatherby introduced its own commercial version. This version uses the full-length .378 case. The two cartridges have different chamber dimensions and are not interchangeable.

Weatherby factory loads include a 200-grain bullet at 3,350 fps, a 225-grain bullet at 3,180 fps and a 250-grain Nosler Partition at 3,060 fps. The cartridge is used for elk, moose and other large game at long range. It also serves for long-distance shooting. Recoil is heavy. Rifles in this chambering are commonly fitted with muzzle brakes. Along with the .30-378 Weatherby Magnum it is one of the best-known cartridges derived from the .378 Weatherby case.

Cartridge specifications	
Bullet Diameter	**0.338" (8.59 mm)**
Max Case Length	**2.913" (73.99 mm)**
Case Trim Length	**2.903" (73.74 mm)**
Max COAL	**3.763" (95.58 mm)**
Primer Pocket	**Large Rifle**
Standard Twist	**1:10"**
Case Capacity	**137.0 gr H_2O**
Max Pressure	**4,400 bar / 63,817 psi (C.I.P.)**

185 gr Bullet · 25" barrel

COAL: 3.700" • Bullet length: 1.241" • Seat depth: 0.454" • Usable capacity: 127.2 / 137.0 gr H_2O

Powder	STEP 1 · 90%		STEP 2		STEP 3		STEP 4		STEP 5 · LIMIT			
	gr	fps	gr	fps	gr	fps	gr	fps	gr	fps	psi	Fill
Hodgdon Retumbo	115.4	3,315	118.6	3,400	121.8	3,480	125.0	3,570	128.2	3,655	63,700	105%
Alliant Reloder 26	107.6	3,285	110.6	3,365	113.5	3,440	116.5	3,525	119.5	3,605	63,800	94%
Vihtavuori N570	114.1	3,215	117.3	3,300	120.4	3,385	123.6	3,470	126.8	3,560	63,700	103%
Accurate MagPro	110.9	3,220	114.0	3,305	117.1	3,385	120.1	3,470	123.2	3,555	63,700	99%
Ramshot Grand	110.3	3,225	113.4	3,310	116.4	3,390	119.5	3,470	122.6	3,555	63,700	98%
Alliant Reloder 23	102.6	3,250	105.4	3,320	108.3	3,400	111.2	3,475	114.0	3,550	63,700	97%
IMR 8133	114.8	3,190	118.0	3,275	121.2	3,360	124.3	3,445	127.5	3,535	63,800	104%
Ramshot Magnum	113.9	3,195	117.1	3,280	120.3	3,365	123.4	3,445	126.6	3,535	63,800	100%
Alliant Reloder 22	102.8	3,220	105.7	3,300	108.5	3,375	111.3	3,450	114.2	3,530	63,800	95%
Winchester StaBALL HD	113.5	3,200	116.7	3,285	119.8	3,365	122.9	3,445	126.1	3,530	63,700	101%
Alliant Reloder 19	100.9	3,215	103.7	3,290	106.5	3,365	109.3	3,445	112.1	3,520	63,700	94%
IMR 4831	98.8	3,215	101.5	3,290	104.3	3,370	107.0	3,445	109.8	3,520	63,800	93%
Alliant Reloder 25	108.4	3,190	111.4	3,270	114.4	3,350	117.4	3,430	120.4	3,515	63,700	103%
Hodgdon H1000	109.6	3,165	112.6	3,245	115.7	3,325	118.8	3,410	121.8	3,490	63,700	104%
Vihtavuori N560	102.0	3,185	104.8	3,255	107.7	3,325	110.5	3,400	113.3	3,470	63,800	93%
IMR 7977	108.1	3,140	111.1	3,215	114.1	3,295	117.1	3,375	120.1	3,460	63,800	102%
IMR 7828	103.5	3,150	106.4	3,225	109.3	3,305	112.1	3,375	115.0	3,455	63,700	91%
Hodgdon H4831	101.1	3,130	103.9	3,200	106.7	3,275	109.5	3,350	112.3	3,425	63,800	95%
Vihtavuori N568	114.8	3,075	118.0	3,160	121.2	3,245	124.4	3,335	127.6	3,425	63,700	104%
Vihtavuori N165	100.8	3,105	103.6	3,175	106.4	3,245	109.2	3,320	112.0	3,390	63,800	95%

200 gr Bullet · 25" barrel

COAL: 3.700" • Bullet length: 1.264" • Seat depth: 0.477" • Usable capacity: 126.8 / 137.0 gr H_2O

Powder	STEP 1 · 90%		STEP 2		STEP 3		STEP 4		STEP 5 · LIMIT			
	gr	fps	gr	fps	gr	fps	gr	fps	gr	fps	psi	Fill
Hodgdon Retumbo	113.3	3,215	116.5	3,295	119.6	3,375	122.8	3,460	125.9	3,545	63,700	103%
Alliant Reloder 26	105.2	3,175	108.1	3,250	111.1	3,330	114.0	3,405	116.9	3,485	63,700	93%
Vihtavuori N570	111.5	3,135	114.6	3,215	117.7	3,295	120.8	3,380	123.9	3,460	63,800	101%
Accurate MagPro	109.2	3,135	112.2	3,215	115.3	3,295	118.3	3,375	121.3	3,455	63,800	98%
Ramshot Grand	108.5	3,135	111.5	3,210	114.5	3,285	117.6	3,370	120.6	3,445	63,800	97%
IMR 8133	113.0	3,110	116.1	3,190	119.3	3,275	122.4	3,355	125.5	3,440	63,800	103%
Ramshot Magnum	112.0	3,115	115.1	3,195	118.2	3,270	121.3	3,355	124.4	3,435	63,700	98%
Winchester StaBALL HD	111.4	3,105	114.5	3,185	117.6	3,260	120.7	3,340	123.8	3,420	63,700	99%
Ramshot LRT	117.5	3,080	120.8	3,165	124.0	3,245	127.3	3,330	130.6	3,415	61,500	105%
Reload Swiss RS76	110.3	3,110	113.3	3,180	116.4	3,260	119.5	3,335	122.5	3,415	63,800	97%
Alliant Reloder 25	106.6	3,105	109.5	3,175	112.5	3,255	115.5	3,335	118.4	3,410	63,800	102%
Hodgdon Hybrid 100V	93.6	3,125	96.2	3,195	98.8	3,265	101.4	3,335	104.0	3,410	63,800	92%
Hodgdon H1000	107.6	3,080	110.6	3,155	113.6	3,230	116.6	3,310	119.6	3,390	63,700	102%
Vihtavuori N565	103.5	3,065	106.4	3,140	109.3	3,215	112.1	3,285	115.0	3,360	63,800	95%
Vihtavuori N568	113.0	3,020	116.2	3,105	119.3	3,185	122.4	3,270	125.6	3,360	63,800	102%
Hodgdon H50BMG	117.5	3,020	120.8	3,100	124.0	3,175	127.3	3,260	130.6	3,340	63,400	105%
IMR 7828	101.2	3,055	104.0	3,125	106.8	3,195	109.6	3,270	112.4	3,340	63,700	89%
Accurate 3100	98.4	3,040	101.1	3,110	103.8	3,180	106.6	3,255	109.3	3,325	63,700	94%
Hodgdon H4831	98.8	3,025	101.5	3,095	104.3	3,165	107.0	3,235	109.8	3,310	63,800	93%
Vihtavuori N165	98.3	2,990	101.0	3,060	103.8	3,130	106.5	3,195	109.2	3,260	63,800	92%

210 gr Bullet · 25" barrel

COAL: 3.720" • Bullet length: 1.313" • Seat depth: 0.506" • Usable capacity: 126.1 / 137.0 gr H_2O

Powder	STEP 1 · 90%		STEP 2		STEP 3		STEP 4		STEP 5 · LIMIT			
	gr	fps	gr	fps	gr	fps	gr	fps	gr	fps	psi	Fill
Hodgdon Retumbo	111.7	3,145	114.8	3,225	117.9	3,305	121.0	3,385	124.1	3,465	63,700	102%
Alliant Reloder 26	103.4	3,105	106.3	3,175	109.2	3,250	112.0	3,325	114.9	3,400	63,700	92%
Accurate MagPro	107.7	3,075	110.7	3,150	113.7	3,230	116.7	3,305	119.7	3,385	63,800	97%
Vihtavuori N570	109.4	3,075	112.4	3,150	115.5	3,230	118.5	3,305	121.5	3,385	63,700	99%
IMR 8133	111.5	3,055	114.6	3,130	117.7	3,210	120.8	3,290	123.9	3,375	63,700	102%
Ramshot LRT	116.9	3,045	120.2	3,130	123.4	3,205	126.7	3,290	129.9	3,375	62,900	105%
Ramshot Grand	107.1	3,070	110.1	3,145	113.0	3,215	116.0	3,295	119.0	3,370	63,800	96%
Ramshot Magnum	110.4	3,055	113.5	3,130	116.6	3,210	119.6	3,285	122.7	3,365	63,700	98%
Alliant Reloder 23	98.6	3,055	101.3	3,125	104.0	3,195	106.8	3,265	109.5	3,335	63,800	94%
Alliant Reloder 25	105.0	3,035	107.9	3,110	110.8	3,185	113.8	3,260	116.7	3,335	63,700	101%
Reload Swiss RS76	108.6	3,035	111.6	3,110	114.7	3,185	117.7	3,260	120.7	3,335	63,800	97%
Alliant Reloder 19	97.5	3,050	100.2	3,120	102.9	3,190	105.6	3,260	108.3	3,330	63,700	91%
Hodgdon H1000	106.0	3,015	109.0	3,090	111.9	3,165	114.8	3,235	117.8	3,315	63,700	101%
IMR 7828SSC	100.3	3,010	103.1	3,080	105.8	3,150	108.6	3,220	111.4	3,295	63,800	92%
IMR 7977	104.7	2,985	107.6	3,060	110.5	3,135	113.4	3,210	116.3	3,285	63,700	100%
Hodgdon H4831SC	98.5	3,005	101.2	3,070	104.0	3,145	106.7	3,210	109.4	3,280	63,700	87%
Hodgdon H50BMG	116.2	2,965	119.4	3,045	122.7	3,125	125.9	3,200	129.1	3,280	63,800	104%
Norma MRP	98.6	3,000	101.3	3,065	104.0	3,135	106.8	3,205	109.5	3,275	63,700	90%
Accurate 3100	96.8	2,970	99.5	3,040	102.2	3,110	104.8	3,175	107.5	3,250	63,800	92%
Hodgdon H4831	97.1	2,955	99.8	3,020	102.5	3,090	105.2	3,155	107.9	3,225	63,700	92%

225 gr Bullet · 25" barrel

COAL: 3.700" • Bullet length: 1.409" • Seat depth: 0.622" • Usable capacity: 123.4 / 137.0 gr H_2O

Powder	STEP 1 · 90%		STEP 2		STEP 3		STEP 4		STEP 5 · LIMIT			
	gr	fps	gr	fps	gr	fps	gr	fps	gr	fps	psi	Fill
Hodgdon Retumbo	108.6	3,050	111.6	3,125	114.7	3,200	117.7	3,275	120.7	3,355	63,800	102%
Ramshot LRT	114.4	2,975	117.6	3,050	120.8	3,130	123.9	3,205	127.1	3,290	63,800	105%
Accurate MagPro	104.9	2,985	107.8	3,060	110.8	3,135	113.7	3,210	116.6	3,285	63,800	96%
Alliant Reloder 26	100.3	3,000	103.1	3,075	105.8	3,140	108.6	3,215	111.4	3,285	63,700	91%
Vihtavuori N570	105.9	2,985	108.9	3,060	111.8	3,130	114.8	3,210	117.7	3,285	63,800	98%
IMR 8133	108.5	2,965	111.5	3,040	114.5	3,115	117.6	3,195	120.6	3,275	63,600	102%
Ramshot Grand	104.2	2,975	107.1	3,045	110.0	3,115	112.9	3,190	115.8	3,265	63,800	96%
Winchester StaBALL HD	106.7	2,945	109.7	3,015	112.7	3,090	115.6	3,160	118.6	3,240	63,700	98%
Alliant Reloder 25	102.2	2,950	105.0	3,015	107.8	3,090	110.7	3,160	113.5	3,235	63,700	100%
Alliant Reloder 19	94.7	2,950	97.3	3,020	100.0	3,090	102.6	3,155	105.2	3,225	63,700	91%
Reload Swiss RS76	105.6	2,940	108.5	3,010	111.4	3,080	114.4	3,150	117.3	3,225	63,700	96%
Alliant Reloder 23	95.4	2,945	98.1	3,015	100.7	3,080	103.3	3,145	106.0	3,215	63,700	93%
Hodgdon H1000	103.1	2,925	105.9	2,995	108.8	3,070	111.7	3,140	114.5	3,210	63,700	101%
Hodgdon H50BMG	113.0	2,880	116.2	2,955	119.3	3,030	122.4	3,105	125.6	3,185	63,800	104%
IMR 7828SSC	97.1	2,910	99.8	2,980	102.5	3,045	105.2	3,115	107.9	3,180	63,800	91%
IMR 7977	101.8	2,895	104.6	2,965	107.4	3,035	110.3	3,110	113.1	3,180	63,700	99%
Hodgdon H4831SC	95.6	2,905	98.3	2,970	100.9	3,035	103.5	3,100	106.2	3,170	63,800	87%
IMR 7828	96.3	2,885	99.0	2,955	101.7	3,020	104.3	3,085	107.0	3,155	63,800	87%
Accurate 3100	93.8	2,875	96.4	2,940	99.0	3,005	101.6	3,070	104.2	3,140	63,800	92%
Hodgdon H4831	94.1	2,855	96.7	2,920	99.3	2,985	102.0	3,050	104.6	3,115	63,800	91%

250 gr Bullet · 25" barrel

COAL: 3.700" • Bullet length: 1.552" • Seat depth: 0.765" • Usable capacity: 120.7 / 137.0 gr H_2O

Powder	STEP 1 · 90%		STEP 2		STEP 3		STEP 4		STEP 5 · LIMIT			
	gr	fps	gr	fps	gr	fps	gr	fps	gr	fps	psi	Fill
Hodgdon Retumbo	104.5	2,900	107.4	2,970	110.3	3,045	113.2	3,115	116.1	3,185	63,700	100%
Ramshot LRT	110.4	2,845	113.5	2,915	116.6	2,990	119.6	3,065	122.7	3,140	63,800	104%
Accurate MagPro	101.3	2,855	104.1	2,925	106.9	2,995	109.7	3,065	112.5	3,135	63,700	95%
IMR 8133	104.9	2,840	107.8	2,910	110.7	2,985	113.6	3,055	116.5	3,130	63,700	100%
Ramshot Magnum	103.6	2,840	106.5	2,910	109.3	2,980	112.2	3,050	115.1	3,125	63,700	96%
Vihtavuori N568	104.8	2,815	107.7	2,890	110.6	2,965	113.5	3,040	116.4	3,115	63,800	100%
Vihtavuori N570	100.9	2,840	103.7	2,910	106.5	2,975	109.3	3,045	112.1	3,115	63,800	96%
Ramshot Grand	100.5	2,835	103.3	2,900	106.1	2,970	108.9	3,035	111.7	3,105	63,800	94%
Alliant Reloder 25	98.5	2,810	101.2	2,880	104.0	2,945	106.7	3,015	109.4	3,080	63,800	99%
Winchester StaBALL HD	102.7	2,805	105.5	2,870	108.4	2,940	111.3	3,010	114.1	3,075	63,700	96%
Reload Swiss RS76	101.6	2,790	104.4	2,855	107.3	2,925	110.1	2,990	112.9	3,060	63,700	94%
Hodgdon H1000	99.1	2,790	101.8	2,855	104.6	2,920	107.3	2,990	110.1	3,055	63,700	99%
Alliant Reloder 22	91.7	2,785	94.3	2,850	96.8	2,910	99.4	2,975	101.9	3,040	63,700	90%
Alliant Reloder 33	105.0	2,765	107.9	2,830	110.8	2,900	113.8	2,970	116.7	3,040	62,900	105%
Alliant Reloder 23	91.2	2,785	93.7	2,845	96.3	2,910	98.8	2,970	101.3	3,035	63,800	91%
Hodgdon H50BMG	108.9	2,750	111.9	2,820	115.0	2,890	118.0	2,960	121.0	3,035	63,700	102%
IMR 7977	98.1	2,765	100.8	2,830	103.5	2,895	106.3	2,965	109.0	3,030	63,800	98%
IMR 7828SSC	93.0	2,765	95.6	2,830	98.2	2,890	100.7	2,950	103.3	3,015	63,800	89%
Winchester Supreme 780	92.6	2,755	95.2	2,820	97.8	2,885	100.3	2,945	102.9	3,010	63,800	86%
IMR 7828	92.2	2,740	94.8	2,805	97.3	2,865	99.9	2,930	102.4	2,990	63,800	85%

275 gr Bullet · 25" barrel

COAL: 3.640" • Bullet length: 1.533" • Seat depth: 0.806" • Usable capacity: 119.4 / 137.0 gr H_2O

Powder	STEP 1 · 90%		STEP 2		STEP 3		STEP 4		STEP 5 · LIMIT			
	gr	fps	gr	fps	gr	fps	gr	fps	gr	fps	psi	Fill
Hodgdon Retumbo	100.9	2,755	103.7	2,820	106.5	2,885	109.3	2,955	112.1	3,020	63,600	98%
Accurate MagPro	98.4	2,730	101.1	2,795	103.8	2,860	106.6	2,930	109.3	2,995	63,800	93%
Ramshot LRT	107.1	2,715	110.1	2,785	113.0	2,850	116.0	2,920	119.0	2,995	63,700	101%
Vihtavuori N568	101.6	2,715	104.4	2,780	107.3	2,850	110.1	2,920	112.9	2,990	63,800	98%
IMR 8133	101.9	2,715	104.7	2,780	107.6	2,850	110.4	2,920	113.2	2,985	63,700	99%
Ramshot Magnum	100.4	2,715	103.2	2,780	106.0	2,845	108.8	2,915	111.6	2,980	63,800	94%
Ramshot Grand	97.5	2,695	100.2	2,760	102.9	2,825	105.6	2,890	108.3	2,955	63,700	92%
Vihtavuori N570	96.2	2,695	98.9	2,755	101.6	2,820	104.2	2,880	106.9	2,945	63,800	92%
Alliant Reloder 25	95.4	2,675	98.1	2,740	100.7	2,805	103.3	2,865	106.0	2,930	63,800	97%
Winchester StaBALL HD	99.3	2,665	102.0	2,725	104.8	2,790	107.5	2,855	110.3	2,920	63,800	94%
Alliant Reloder 33	102.2	2,645	105.0	2,705	107.9	2,775	110.8	2,840	113.6	2,905	63,600	103%
Hodgdon H1000	95.8	2,655	98.5	2,715	101.1	2,775	103.8	2,840	106.4	2,905	63,800	97%
Reload Swiss RS76	98.3	2,650	101.0	2,710	103.8	2,775	106.5	2,835	109.2	2,900	63,700	92%
Hodgdon H50BMG	105.5	2,625	108.4	2,690	111.3	2,755	114.3	2,820	117.2	2,890	63,700	100%
IMR 7977	95.0	2,630	97.6	2,690	100.3	2,755	102.9	2,815	105.5	2,880	63,700	96%
Reload Swiss RS62	85.7	2,645	88.1	2,705	90.5	2,760	92.8	2,820	95.2	2,880	63,800	83%
IMR 7828SSC	89.5	2,620	92.0	2,680	94.5	2,735	96.9	2,795	99.4	2,855	63,800	87%
Vihtavuori 24N41	100.9	2,595	103.7	2,660	106.5	2,725	109.3	2,790	112.1	2,855	63,600	96%
Winchester Supreme 780	88.9	2,605	91.4	2,665	93.8	2,720	96.3	2,780	98.8	2,845	63,700	83%
Hodgdon H4831	86.8	2,565	89.2	2,620	91.6	2,675	94.0	2,735	96.4	2,790	63,800	87%

300 gr Bullet · 25" barrel

COAL: 3.750" • Bullet length: 1.780" • Seat depth: 0.943" • Usable capacity: 116.8 / 137.0 gr H_2O

Powder	STEP 1 · 90%		STEP 2		STEP 3		STEP 4		STEP 5 · LIMIT			
	gr	fps	gr	fps	gr	fps	gr	fps	gr	fps	psi	Fill
Hodgdon Retumbo	97.2	2,630	99.9	2,695	102.6	2,755	105.3	2,815	108.0	2,880	63,800	96%
Hodgdon US 869	107.2	2,600	110.2	2,670	113.2	2,740	116.1	2,810	119.1	2,880	60,700	105%
Vihtavuori N568	98.2	2,620	100.9	2,685	103.7	2,750	106.4	2,815	109.1	2,880	63,800	97%
Accurate MagPro	95.1	2,620	97.8	2,680	100.4	2,745	103.0	2,805	105.7	2,870	63,800	92%
Ramshot LRT	103.5	2,605	106.4	2,670	109.3	2,735	112.1	2,800	115.0	2,865	63,700	100%
IMR 8133	98.6	2,605	101.3	2,670	104.0	2,730	106.8	2,800	109.5	2,860	63,700	98%
Ramshot Magnum	96.9	2,605	99.6	2,665	102.3	2,730	105.0	2,795	107.7	2,855	63,700	93%
Ramshot Grand	94.1	2,575	96.7	2,635	99.3	2,700	102.0	2,760	104.6	2,820	63,700	91%
Vihtavuori N570	92.1	2,575	94.6	2,630	97.2	2,690	99.8	2,750	102.3	2,810	63,800	90%
Alliant Reloder 25	92.1	2,565	94.6	2,620	97.2	2,680	99.8	2,745	102.3	2,800	63,800	96%
Winchester StaBALL HD	95.6	2,545	98.3	2,605	100.9	2,665	103.5	2,725	106.2	2,785	63,800	93%
Alliant Reloder 33	98.7	2,530	101.5	2,595	104.2	2,655	107.0	2,720	109.7	2,780	63,800	102%
Alliant Reloder 19	84.7	2,545	87.0	2,600	89.4	2,660	91.8	2,715	94.1	2,775	63,800	86%
Hodgdon H1000	92.2	2,535	94.8	2,595	97.3	2,650	99.9	2,715	102.4	2,770	63,700	95%
Reload Swiss RS76	94.8	2,530	97.4	2,590	100.0	2,645	102.7	2,705	105.3	2,765	63,800	91%
Hodgdon H50BMG	101.8	2,515	104.6	2,575	107.4	2,635	110.3	2,700	113.1	2,760	63,800	99%
IMR 7977	91.5	2,515	94.0	2,570	96.6	2,630	99.2	2,690	101.7	2,750	63,700	95%
IMR 7828SSC	85.9	2,495	88.3	2,550	90.7	2,605	93.0	2,660	95.4	2,715	63,700	85%
IMR 7828	85.1	2,475	87.5	2,530	89.8	2,585	92.2	2,640	94.6	2,700	63,700	82%
Vihtavuori N565	84.2	2,475	86.5	2,530	88.8	2,580	91.2	2,635	93.5	2,690	63,800	84%

.340 Weatherby Magnum

Roy Weatherby introduced the .340 Weatherby Magnum in the early 1960s. He was responding in part to the .338 Winchester Magnum of 1958. He also wanted to fill the gap between his .300 and .378 Weatherby Magnums. The cartridge is made by necking up the .300 Weatherby Magnum case to accept .338-inch bullets. That parent case is itself a full-length blown-out .300 H&H Magnum. The longer case holds more powder than the .338 Winchester Magnum. It also has Weatherby's characteristic double-radius shoulder.

Factory ammunition drives a 250-grain bullet at about 2,940 fps. This is noticeably faster than the .338 Winchester Magnum with the same bullet weight. The cartridge is used for large and heavy game such as elk, moose and bears. It also serves for much African plains game. Weatherby continues to load ammunition with bullets of about 225 and 250 grains. Rifles in this chambering are made mainly by Weatherby.

Cartridge specifications	
Bullet Diameter	**0.338" (8.59 mm)**
Max Case Length	**2.825" (71.76 mm)**
Case Trim Length	**2.815" (71.51 mm)**
Max COAL	**3.700" (93.98 mm)**
Primer Pocket	**Large Rifle**
Standard Twist	**1:10"**
Case Capacity	**102.0 gr H_2O**
Max Pressure	**62,500 psi (SAAMI)**

185 gr Bullet · 25" barrel

COAL: 3.610" • Bullet length: 1.295" • Seat depth: 0.511" • Usable capacity: 91.2 / 102.0 gr H_2O

Powder	STEP 1 · 90%		STEP 2		STEP 3		STEP 4		STEP 5 · LIMIT			
	gr	fps	gr	fps	gr	fps	gr	fps	gr	fps	psi	Fill
Hodgdon SUPERFORMANCE	81.2	2,990	83.5	3,065	85.7	3,135	88.0	3,210	90.2	3,285	62,400	97%
Hodgdon H4350	78.8	2,985	81.0	3,055	83.2	3,130	85.4	3,200	87.6	3,275	62,500	97%
Vihtavuori N555	79.6	2,985	81.8	3,060	84.0	3,130	86.2	3,200	88.4	3,275	62,300	104%
Accurate 4350	78.7	2,985	80.9	3,055	83.1	3,125	85.2	3,195	87.4	3,270	62,400	100%
IMR 4350	78.6	2,985	80.8	3,055	82.9	3,125	85.1	3,195	87.3	3,270	62,500	103%
Alliant Reloder 26	85.8	2,950	88.2	3,030	90.5	3,100	92.9	3,180	95.3	3,260	59,700	105%
Winchester StaBALL 6.5	77.0	2,980	79.1	3,045	81.3	3,115	83.4	3,180	85.5	3,250	62,500	95%
IMR 4831	79.8	2,935	82.0	3,010	84.3	3,085	86.5	3,160	88.7	3,235	62,400	104%
Ramshot Hunter	79.3	2,945	81.5	3,015	83.7	3,085	85.9	3,155	88.1	3,230	62,300	103%
IMR 7828	85.6	2,915	88.0	2,990	90.3	3,065	92.7	3,140	95.1	3,225	62,400	105%
Alliant Reloder 16	75.2	2,945	77.3	3,010	79.3	3,075	81.4	3,140	83.5	3,210	62,400	102%
Alliant Reloder 19	81.1	2,915	83.3	2,985	85.6	3,060	87.8	3,135	90.1	3,210	60,300	105%
Norma MRP	82.8	2,905	85.1	2,975	87.4	3,050	89.7	3,125	92.0	3,200	62,000	105%
Hodgdon H4831SC	82.5	2,900	84.8	2,975	87.1	3,045	89.4	3,120	91.7	3,195	62,400	101%
Ramshot Big Game	73.7	2,930	75.8	2,995	77.8	3,060	79.9	3,130	81.9	3,190	62,300	91%
Winchester Supreme 780	84.5	2,885	86.8	2,960	89.2	3,035	91.6	3,115	93.9	3,190	62,500	104%
Alliant Power Pro 2000-MR	72.4	2,925	74.4	2,990	76.4	3,055	78.4	3,120	80.4	3,185	62,400	93%
Winchester 760	75.0	2,910	77.1	2,980	79.2	3,045	81.2	3,110	83.3	3,180	62,400	94%
Hodgdon H380	72.5	2,895	74.5	2,960	76.5	3,025	78.6	3,090	80.6	3,155	62,300	94%
Shooters World SW4350	76.8	2,855	78.9	2,920	81.0	2,990	83.2	3,060	85.3	3,125	62,400	101%

200 gr Bullet · 25" barrel

COAL: 3.560" • Bullet length: 1.264" • Seat depth: 0.529" • Usable capacity: 90.6 / 102.0 gr H_2O

Powder	STEP 1 · 90%		STEP 2		STEP 3		STEP 4		STEP 5 · LIMIT			
	gr	fps	gr	fps	gr	fps	gr	fps	gr	fps	psi	Fill
Alliant Reloder 26	85.2	2,905	87.6	2,980	90.0	3,055	92.3	3,130	94.7	3,205	62,100	105%
Hodgdon SUPERFORMANCE	79.5	2,895	81.7	2,965	83.9	3,035	86.1	3,105	88.3	3,175	62,500	95%
Alliant Reloder 19	80.6	2,870	82.8	2,940	85.0	3,010	87.3	3,085	89.5	3,160	62,500	105%
Accurate 4350	77.0	2,885	79.1	2,950	81.3	3,020	83.4	3,085	85.5	3,155	62,500	99%
Hodgdon H4350	76.8	2,880	78.9	2,950	81.0	3,015	83.2	3,085	85.3	3,155	62,400	95%
Vihtavuori N555	77.1	2,880	79.3	2,950	81.4	3,015	83.5	3,080	85.7	3,150	62,400	102%
IMR 4350	76.5	2,875	78.6	2,940	80.8	3,010	82.9	3,080	85.0	3,145	62,300	101%
IMR 4831	78.4	2,855	80.6	2,925	82.8	3,000	84.9	3,065	87.1	3,140	62,400	103%
IMR 7828	83.6	2,835	85.9	2,905	88.3	2,980	90.6	3,055	92.9	3,125	62,400	103%
Ramshot Hunter	77.7	2,850	79.8	2,915	82.0	2,985	84.2	3,055	86.3	3,120	62,500	101%
Norma 204	75.8	2,845	77.9	2,910	80.0	2,980	82.1	3,045	84.2	3,115	62,500	98%
Alliant Reloder 17	73.6	2,820	75.6	2,885	77.7	2,955	79.8	3,025	81.8	3,090	62,500	91%
Alliant Reloder 16	73.1	2,830	75.1	2,890	77.2	2,955	79.2	3,015	81.2	3,080	62,400	99%
Accurate 2700	72.3	2,810	74.3	2,870	76.3	2,935	78.3	3,000	80.3	3,060	62,400	90%
Winchester 760	73.3	2,805	75.3	2,870	77.3	2,930	79.4	3,000	81.4	3,060	62,400	92%
IMR 4007 SSC	73.2	2,790	75.2	2,855	77.3	2,920	79.3	2,985	81.3	3,050	62,400	96%
Hodgdon H4831	79.7	2,760	81.9	2,825	84.2	2,900	86.4	2,970	88.6	3,040	59,900	105%
IMR 4451	73.6	2,780	75.6	2,845	77.7	2,910	79.8	2,975	81.8	3,040	62,400	94%
Accurate 3100	78.8	2,750	81.0	2,820	83.2	2,890	85.4	2,960	87.6	3,030	61,200	105%
IMR 4320	66.0	2,765	67.8	2,820	69.7	2,885	71.5	2,945	73.3	3,000	62,500	81%

215 gr Bullet · 25" barrel

COAL: 3.560" • Bullet length: 1.370" • Seat depth: 0.635" • Usable capacity: 88.3 / 102.0 gr H_2O

Powder	STEP 1 · 90%		STEP 2		STEP 3		STEP 4		STEP 5 · LIMIT			
	gr	fps	gr	fps	gr	fps	gr	fps	gr	fps	psi	Fill
Alliant Reloder 26	82.7	2,815	85.0	2,885	87.3	2,960	89.6	3,030	91.9	3,105	62,400	104%
Hodgdon SUPERFORMANCE	76.9	2,790	79.0	2,855	81.2	2,925	83.3	2,990	85.4	3,060	62,300	95%
Alliant Reloder 19	78.0	2,775	80.2	2,840	82.3	2,910	84.5	2,980	86.7	3,050	62,500	104%
Hodgdon H4350	74.1	2,775	76.1	2,835	78.2	2,905	80.3	2,970	82.3	3,035	62,500	94%
Accurate 4350	74.3	2,770	76.4	2,835	78.4	2,900	80.5	2,965	82.6	3,030	62,400	98%
IMR 4831	76.0	2,760	78.1	2,825	80.2	2,895	82.3	2,960	84.4	3,030	62,400	103%
Reload Swiss RS62	75.9	2,760	78.0	2,825	80.1	2,895	82.2	2,960	84.3	3,030	62,400	99%
IMR 4350	73.8	2,765	75.8	2,825	77.9	2,895	80.0	2,960	82.0	3,025	62,400	100%
Alliant Reloder 22	78.6	2,750	80.8	2,815	82.9	2,885	85.1	2,950	87.3	3,020	59,900	105%
IMR 7828	80.7	2,740	83.0	2,810	85.2	2,880	87.5	2,950	89.7	3,020	62,400	102%
Ramshot Hunter	75.2	2,745	77.3	2,810	79.3	2,870	81.4	2,935	83.5	3,000	62,500	100%
Winchester Supreme 780	80.1	2,720	82.3	2,790	84.5	2,855	86.8	2,930	89.0	3,000	62,400	101%
Norma MRP	78.7	2,730	80.9	2,795	83.1	2,865	85.2	2,930	87.4	2,995	62,400	103%
Hodgdon H4831SC	78.3	2,720	80.5	2,785	82.7	2,855	84.8	2,920	87.0	2,990	62,300	99%
Alliant Power Pro 4000-MR	75.2	2,720	77.3	2,785	79.4	2,850	81.5	2,915	83.6	2,980	62,400	96%
Accurate 3100	76.9	2,680	79.0	2,745	81.2	2,815	83.3	2,880	85.4	2,950	62,400	105%
Alliant Reloder 16	70.3	2,710	72.3	2,770	74.2	2,825	76.1	2,885	78.1	2,945	62,400	98%
Winchester 760	70.7	2,690	72.7	2,755	74.7	2,815	76.6	2,875	78.6	2,940	62,400	91%
IMR 4451	71.2	2,680	73.2	2,740	75.2	2,800	77.1	2,860	79.1	2,925	62,400	93%
Hodgdon H380	68.0	2,660	69.9	2,720	71.8	2,775	73.6	2,835	75.5	2,890	62,400	91%

225 gr Bullet · 25" barrel

COAL: 3.580" • Bullet length: 1.418" • Seat depth: 0.663" • Usable capacity: 87.8 / 102.0 gr H_2O

Powder	STEP 1 · 90%		STEP 2		STEP 3		STEP 4		STEP 5 · LIMIT			
	gr	fps	gr	fps	gr	fps	gr	fps	gr	fps	psi	Fill
Alliant Reloder 26	81.5	2,760	83.8	2,830	86.0	2,900	88.3	2,970	90.6	3,045	62,300	104%
Hodgdon SUPERFORMANCE	75.8	2,735	77.9	2,800	80.0	2,860	82.1	2,925	84.2	2,995	62,400	94%
Alliant Reloder 19	77.0	2,725	79.1	2,790	81.3	2,860	83.4	2,925	85.5	2,990	62,400	103%
Vihtavuori N560	79.4	2,730	81.6	2,795	83.8	2,860	86.0	2,925	88.2	2,990	62,100	105%
Alliant Reloder 22	78.1	2,715	80.3	2,785	82.4	2,845	84.6	2,915	86.8	2,985	61,200	105%
IMR 4831	75.0	2,705	77.1	2,775	79.2	2,840	81.2	2,905	83.3	2,970	62,300	102%
Reload Swiss RS62	74.9	2,705	77.0	2,770	79.1	2,840	81.1	2,900	83.2	2,970	62,400	99%
Hodgdon H4350	72.8	2,710	74.8	2,770	76.8	2,835	78.9	2,900	80.9	2,960	62,500	93%
IMR 7828	79.5	2,690	81.7	2,755	83.9	2,825	86.1	2,890	88.3	2,960	62,400	101%
IMR 4350	72.5	2,700	74.5	2,760	76.5	2,825	78.6	2,890	80.6	2,950	62,400	99%
Vihtavuori N555	72.5	2,705	74.5	2,765	76.5	2,825	78.6	2,890	80.6	2,950	62,400	99%
IMR 7828SSC	78.9	2,675	81.1	2,740	83.3	2,810	85.5	2,875	87.7	2,945	62,300	104%
Norma MRP	77.6	2,675	79.8	2,740	81.9	2,805	84.0	2,870	86.2	2,935	62,500	102%
Ramshot Hunter	74.0	2,680	76.0	2,740	78.1	2,805	80.2	2,870	82.2	2,935	62,300	99%
Alliant Power Pro 4000-MR	74.2	2,665	76.3	2,725	78.3	2,790	80.4	2,855	82.4	2,915	62,400	96%
Hodgdon H4831	77.1	2,650	79.3	2,715	81.4	2,780	83.5	2,845	85.7	2,915	62,300	105%
Accurate 3100	75.8	2,630	77.9	2,695	80.0	2,760	82.1	2,825	84.2	2,890	62,400	104%
Alliant Reloder 16	69.0	2,640	70.9	2,695	72.8	2,755	74.8	2,815	76.7	2,870	62,400	97%
Vihtavuori N160	72.6	2,625	74.6	2,685	76.7	2,745	78.7	2,805	80.7	2,865	62,400	100%
Winchester 760	69.6	2,630	71.5	2,690	73.4	2,745	75.4	2,810	77.3	2,865	62,300	90%

250 gr Bullet · 25" barrel

COAL: 3.560" • Bullet length: 1.555" • Seat depth: 0.820" • Usable capacity: 84.8 / 102.0 gr H_2O

Powder	STEP 1 · 90%		STEP 2		STEP 3		STEP 4		STEP 5 · LIMIT			
	gr	fps	gr	fps	gr	fps	gr	fps	gr	fps	psi	Fill
Alliant Reloder 26	77.9	2,630	80.1	2,695	82.3	2,760	84.4	2,825	86.6	2,895	62,400	103%
Alliant Reloder 22	75.1	2,595	77.2	2,660	79.3	2,725	81.3	2,785	83.4	2,850	62,400	104%
Alliant Reloder 19	73.5	2,585	75.5	2,650	77.6	2,715	79.7	2,780	81.7	2,840	62,300	102%
Hodgdon SUPERFORMANCE	72.3	2,585	74.3	2,645	76.3	2,705	78.3	2,770	80.3	2,830	62,400	93%
Alliant Reloder 23	73.9	2,580	76.0	2,640	78.0	2,700	80.0	2,760	82.1	2,825	60,500	105%
IMR 4831	71.7	2,570	73.7	2,630	75.7	2,695	77.7	2,755	79.7	2,820	62,300	101%
Reload Swiss RS62	71.6	2,570	73.6	2,630	75.5	2,690	77.5	2,750	79.5	2,815	62,400	97%
Vihtavuori N560	75.2	2,575	77.3	2,635	79.4	2,695	81.5	2,755	83.6	2,815	62,400	103%
IMR 7828	75.6	2,555	77.7	2,615	79.8	2,680	81.9	2,740	84.0	2,805	62,400	100%
Norma URP	68.4	2,565	70.3	2,625	72.2	2,685	74.1	2,745	76.0	2,805	62,400	98%
Reload Swiss RS70	73.2	2,560	75.2	2,620	77.3	2,680	79.3	2,745	81.3	2,805	62,300	97%
Winchester Supreme 780	75.3	2,540	77.4	2,605	79.5	2,665	81.6	2,730	83.7	2,795	62,300	99%
Hodgdon H4350	69.0	2,555	70.9	2,615	72.8	2,670	74.8	2,730	76.7	2,790	62,400	91%
IMR 7828SSC	75.1	2,540	77.2	2,605	79.3	2,665	81.3	2,725	83.4	2,790	62,300	102%
Ramshot Grand	78.7	2,530	80.9	2,595	83.1	2,660	85.2	2,725	87.4	2,790	59,000	105%
Hodgdon H4831SC	73.8	2,535	75.8	2,590	77.9	2,655	80.0	2,715	82.0	2,780	62,400	97%
IMR 4350	68.9	2,545	70.8	2,605	72.7	2,660	74.6	2,720	76.5	2,775	62,400	97%
Vihtavuori N555	68.4	2,545	70.3	2,605	72.2	2,660	74.1	2,720	76.0	2,775	62,400	96%
Vihtavuori N165	74.6	2,525	76.7	2,585	78.8	2,645	80.8	2,705	82.9	2,765	60,300	105%
Hodgdon H4831	73.5	2,515	75.5	2,575	77.6	2,640	79.7	2,700	81.7	2,760	62,400	103%

265 gr Bullet · 25" barrel

COAL: 3.700" • Bullet length: 1.680" • Seat depth: 0.805" • Usable capacity: 84.6 / 102.0 gr H_2O

Powder	STEP 1 · 90%		STEP 2		STEP 3		STEP 4		STEP 5 · LIMIT			
	gr	fps	gr	fps	gr	fps	gr	fps	gr	fps	psi	Fill
Alliant Reloder 26	76.5	2,555	78.6	2,615	80.8	2,680	82.9	2,740	85.0	2,805	62,400	101%
Alliant Reloder 19	72.4	2,515	74.4	2,575	76.4	2,640	78.4	2,700	80.4	2,760	62,500	101%
Alliant Reloder 22	73.7	2,520	75.8	2,580	77.8	2,640	79.9	2,700	81.9	2,760	62,400	103%
Alliant Reloder 23	73.3	2,520	75.3	2,580	77.3	2,635	79.4	2,700	81.4	2,760	62,300	104%
Ramshot Grand	78.4	2,490	80.6	2,550	82.8	2,615	84.9	2,680	87.1	2,745	61,000	105%
Accurate MagPro	78.2	2,475	80.4	2,540	82.6	2,605	84.7	2,665	86.9	2,735	61,200	105%
Hodgdon SUPERFORMANCE	70.8	2,500	72.8	2,560	74.8	2,620	76.7	2,675	78.7	2,735	62,400	91%
IMR 4831	70.6	2,495	72.5	2,555	74.5	2,615	76.5	2,675	78.4	2,735	62,300	100%
Reload Swiss RS70	71.9	2,480	73.9	2,540	75.9	2,600	77.9	2,660	79.9	2,720	62,500	95%
IMR 7828	74.0	2,475	76.0	2,535	78.1	2,595	80.2	2,655	82.2	2,715	62,300	98%
Ramshot Magnum	79.7	2,450	81.9	2,510	84.1	2,575	86.3	2,640	88.5	2,705	59,600	105%
Reload Swiss RS76	79.2	2,455	81.4	2,515	83.6	2,575	85.8	2,640	88.0	2,700	60,700	105%
Hodgdon H4350	67.5	2,465	69.4	2,525	71.3	2,580	73.1	2,635	75.0	2,690	62,400	89%
Hodgdon H4831SC	72.5	2,455	74.5	2,515	76.5	2,570	78.5	2,630	80.5	2,690	62,400	96%
Norma MRP	72.5	2,455	74.5	2,510	76.5	2,570	78.6	2,630	80.6	2,690	62,400	99%
Hodgdon H4831	72.1	2,440	74.1	2,495	76.1	2,555	78.1	2,615	80.1	2,675	62,400	102%
IMR 4350	67.2	2,450	69.1	2,505	71.0	2,565	72.8	2,615	74.7	2,675	62,300	95%
Ramshot Hunter	69.1	2,445	71.0	2,505	72.9	2,560	74.9	2,615	76.8	2,675	62,400	96%
Norma 204	67.7	2,440	69.6	2,500	71.5	2,555	73.3	2,610	75.2	2,665	62,400	93%
Accurate 3100	70.9	2,425	72.9	2,485	74.8	2,540	76.8	2,600	78.8	2,660	62,400	101%

300 gr Bullet · 25" barrel

COAL: 3.600" • Bullet length: 1.780" • Seat depth: 1.005" • Usable capacity: 80.9 / 102.0 gr H_2O

Powder	STEP 1 · 90%		STEP 2		STEP 3		STEP 4		STEP 5 · LIMIT			
	gr	fps	gr	fps	gr	fps	gr	fps	gr	fps	psi	Fill
Alliant Reloder 26	72.0	2,390	74.0	2,445	76.0	2,505	78.0	2,560	80.0	2,620	62,300	99%
Vihtavuori N565	72.6	2,370	74.6	2,425	76.7	2,480	78.7	2,540	80.7	2,595	62,300	105%
Accurate MagPro	74.6	2,350	76.7	2,410	78.8	2,470	80.8	2,525	82.9	2,590	62,400	105%
Ramshot Grand	74.8	2,355	76.9	2,410	78.9	2,470	81.0	2,530	83.1	2,590	62,400	105%
Alliant Reloder 19	68.2	2,355	70.1	2,410	72.0	2,465	73.9	2,525	75.8	2,580	62,400	100%
Alliant Reloder 22	69.4	2,355	71.3	2,410	73.3	2,465	75.2	2,520	77.1	2,580	62,500	101%
Alliant Reloder 23	68.9	2,350	70.8	2,405	72.8	2,460	74.7	2,515	76.6	2,570	62,400	103%
Ramshot Magnum	76.1	2,330	78.2	2,390	80.3	2,450	82.5	2,510	84.6	2,570	61,300	105%
IMR 4831	66.7	2,335	68.5	2,390	70.4	2,445	72.3	2,500	74.1	2,555	62,400	98%
Reload Swiss RS76	75.6	2,320	77.7	2,375	79.8	2,435	81.9	2,490	84.0	2,550	62,400	105%
Reload Swiss RS70	67.7	2,320	69.6	2,370	71.5	2,425	73.3	2,480	75.2	2,535	62,400	94%
IMR 7828	69.4	2,310	71.3	2,365	73.3	2,420	75.2	2,475	77.1	2,530	62,300	96%
Winchester Supreme 780	69.5	2,310	71.4	2,365	73.3	2,420	75.3	2,475	77.2	2,530	62,300	96%
IMR 7828SSC	68.9	2,300	70.8	2,350	72.8	2,410	74.7	2,460	76.6	2,515	62,400	98%
Hodgdon H4831SC	68.2	2,290	70.1	2,345	72.0	2,400	73.9	2,455	75.8	2,510	62,300	94%
Norma MRP	68.2	2,290	70.1	2,345	72.0	2,400	73.9	2,455	75.8	2,510	62,500	97%
Accurate 4350	63.9	2,290	65.7	2,345	67.5	2,395	69.2	2,445	71.0	2,500	62,400	92%
Vihtavuori N165	69.1	2,285	71.0	2,340	72.9	2,390	74.9	2,445	76.8	2,500	62,500	102%
Vihtavuori N560	68.2	2,295	70.1	2,345	72.0	2,395	73.9	2,450	75.8	2,500	62,400	98%
IMR 4350	62.9	2,275	64.7	2,325	66.4	2,375	68.2	2,425	69.9	2,475	62,400	93%

.35 Remington

Remington introduced the .35 Remington in 1906. It became the best-known chambering of the Remington Model 8 semiautomatic rifle. It is a rimless bottlenecked cartridge of original design rather than a derivative of an earlier case. Over the following decades most major manufacturers chambered it in a wide range of rifles. These included the Remington Model 141 slide-action rifle and the Marlin Model 336 lever-action. The Remington XP-100 bolt-action pistol was also chambered for it.

The standard factory load uses a 200-grain bullet at about 2,070 fps. Its modest velocity and blunt bullets limit its effective range. Within reasonable distances it is well suited to deer, black bear and other medium game. Recoil is moderate. Rifles such as the Marlin 336 use tubular magazines. Ammunition for them must therefore use flat-nose, round-nose or flexible-tip bullets. Factory ammunition remains available. The cartridge continues to be used mainly by hunters in wooded country.

Cartridge specifications	
Bullet Diameter	**0.358" (9.09 mm)**
Max Case Length	**1.920" (48.77 mm)**
Case Trim Length	**1.910" (48.52 mm)**
Max COAL	**2.525" (64.14 mm)**
Primer Pocket	**Large Rifle**
Standard Twist	**1:16"**
Case Capacity	**51.3 gr H_2O**
Max Pressure	**33,500 psi (SAAMI)**

158 gr Bullet · 25" barrel

COAL: 2.215" • Bullet length: 0.668" • Seat depth: 0.373" • Usable capacity: 41.8 / 51.3 gr H_2O

Powder	STEP 1 · 90%		STEP 2		STEP 3		STEP 4		STEP 5 · LIMIT			
	gr	fps	gr	fps	gr	fps	gr	fps	gr	fps	psi	Fill
Hodgdon Leverevolution	39.7	2,245	40.8	2,300	41.9	2,355	43.0	2,415	44.1	2,470	33,300	101%
Hodgdon CFE BLK	32.4	2,250	33.3	2,305	34.2	2,355	35.1	2,405	36.0	2,455	33,500	89%
Alliant AR-Comp	35.6	2,200	36.6	2,250	37.6	2,305	38.6	2,355	39.6	2,405	33,400	101%
Accurate 2230	35.8	2,200	36.8	2,250	37.8	2,295	38.8	2,345	39.8	2,395	33,400	96%
Accurate 2460	36.7	2,190	37.7	2,240	38.8	2,295	39.8	2,345	40.8	2,395	33,300	98%
Ramshot X-Terminator	34.9	2,165	35.9	2,215	36.8	2,260	37.8	2,310	38.8	2,360	33,300	94%
Vihtavuori N530	35.9	2,145	36.9	2,200	37.9	2,250	38.9	2,300	39.9	2,355	33,500	102%
Accurate 2520	37.2	2,145	38.2	2,195	39.3	2,250	40.3	2,300	41.3	2,350	33,400	102%
Vihtavuori N135	36.4	2,115	37.4	2,165	38.4	2,215	39.4	2,270	40.4	2,320	32,000	105%
Hodgdon Benchmark	34.7	2,105	35.7	2,160	36.6	2,205	37.5	2,250	38.5	2,305	33,400	101%
Norma 202	36.4	2,100	37.4	2,150	38.4	2,200	39.4	2,250	40.4	2,300	32,300	105%
Reload Swiss RS40	32.9	2,090	33.8	2,140	34.7	2,190	35.6	2,240	36.5	2,290	33,500	93%
Shooters World The Patriot	33.9	2,085	34.9	2,140	35.8	2,185	36.8	2,240	37.7	2,285	33,500	94%
Ramshot TAC	34.7	2,070	35.7	2,120	36.7	2,175	37.6	2,220	38.6	2,275	33,500	98%
Accurate 2200	31.4	2,075	32.3	2,125	33.1	2,170	34.0	2,220	34.9	2,270	33,300	95%
IMR 4895	37.2	2,060	38.2	2,110	39.3	2,165	40.3	2,215	41.3	2,265	33,400	102%
IMR 8208 XBR	35.3	2,060	36.3	2,115	37.3	2,165	38.2	2,215	39.2	2,265	33,400	102%
Accurate 2015	32.0	2,050	32.9	2,100	33.8	2,150	34.7	2,200	35.6	2,250	33,400	88%
Hodgdon H322	31.4	2,025	32.3	2,080	33.1	2,120	34.0	2,170	34.9	2,220	33,400	89%
Hodgdon H4895	35.2	2,015	36.2	2,070	37.2	2,120	38.1	2,165	39.1	2,220	33,300	97%

200 gr Bullet · 25" barrel

COAL: 2.475" • Bullet length: 0.959" • Seat depth: 0.404" • Usable capacity: 41.0 / 51.3 gr H_2O

Powder	STEP 1 · 90%		STEP 2		STEP 3		STEP 4		STEP 5 · LIMIT			
	gr	fps	gr	fps	gr	fps	gr	fps	gr	fps	psi	Fill
Hodgdon Leverevolution	37.3	2,045	38.3	2,095	39.3	2,145	40.4	2,195	41.4	2,245	33,400	96%
Vihtavuori N540	36.5	1,965	37.5	2,015	38.5	2,060	39.5	2,105	40.5	2,150	32,200	105%
Hodgdon CFE BLK	30.0	1,960	30.8	2,005	31.6	2,050	32.5	2,095	33.3	2,140	33,400	83%
Vihtavuori N530	32.8	1,950	33.7	1,995	34.6	2,040	35.5	2,085	36.4	2,130	33,500	95%
Alliant AR-Comp	32.9	1,950	33.8	1,995	34.7	2,040	35.6	2,085	36.5	2,125	33,400	95%
Vihtavuori N135	34.2	1,935	35.2	1,985	36.1	2,030	37.0	2,070	38.0	2,120	33,500	100%
Accurate 2520	34.6	1,935	35.5	1,975	36.5	2,025	37.5	2,070	38.4	2,115	33,300	96%
Norma 202	34.1	1,915	35.0	1,960	36.0	2,010	37.0	2,055	37.9	2,100	33,500	100%
Alliant Reloder 15	36.3	1,890	37.3	1,935	38.3	1,980	39.3	2,030	40.3	2,075	32,700	105%
Accurate 2230	32.1	1,895	33.0	1,940	33.9	1,985	34.8	2,025	35.7	2,070	33,500	88%
IMR 4895	34.6	1,885	35.5	1,930	36.5	1,975	37.5	2,025	38.4	2,065	33,400	97%
Vihtavuori N140	35.1	1,880	36.1	1,925	37.0	1,970	38.0	2,020	39.0	2,065	33,500	97%
Hodgdon Benchmark	31.4	1,865	32.3	1,910	33.1	1,950	34.0	1,995	34.9	2,040	33,300	94%
Hodgdon CFE 223	36.2	1,855	37.2	1,900	38.2	1,950	39.2	1,995	40.2	2,040	33,400	100%
IMR 8208 XBR	32.4	1,860	33.3	1,905	34.2	1,950	35.1	1,995	36.0	2,040	33,400	95%
Ramshot TAC	32.4	1,860	33.3	1,905	34.2	1,950	35.1	1,995	36.0	2,040	33,400	93%
Ramshot X-Terminator	31.2	1,860	32.1	1,905	33.0	1,950	33.8	1,990	34.7	2,035	33,400	86%
Hodgdon H4895	32.8	1,845	33.7	1,890	34.6	1,935	35.5	1,975	36.4	2,020	33,500	92%
Hodgdon Varget	34.2	1,830	35.2	1,880	36.1	1,920	37.0	1,965	38.0	2,015	33,400	96%
Accurate 2015	29.9	1,825	30.7	1,870	31.6	1,915	32.4	1,955	33.2	2,000	33,400	84%

220 gr Bullet · 25" barrel

COAL: 2.470" • Bullet length: 1.032" • Seat depth: 0.482" • Usable capacity: 39.1 / 51.3 gr H_2O

Powder	STEP 1 · 90%		STEP 2		STEP 3		STEP 4		STEP 5 · LIMIT			
	gr	fps	gr	fps	gr	fps	gr	fps	gr	fps	psi	Fill
Hodgdon Leverevolution	35.3	1,925	36.3	1,975	37.3	2,025	38.2	2,065	39.2	2,115	33,300	96%
Vihtavuori N540	34.7	1,865	35.7	1,910	36.7	1,955	37.6	1,995	38.6	2,040	32,800	105%
Vihtavuori N530	30.8	1,830	31.7	1,875	32.5	1,915	33.4	1,960	34.2	2,000	33,400	94%
Hodgdon CFE BLK	28.4	1,830	29.2	1,875	29.9	1,910	30.7	1,955	31.5	1,995	33,500	83%
Accurate 2520	32.8	1,820	33.7	1,860	34.6	1,905	35.5	1,945	36.4	1,990	33,400	96%
Alliant AR-Comp	31.0	1,820	31.9	1,865	32.7	1,905	33.5	1,945	34.4	1,990	33,400	94%
Vihtavuori N135	32.2	1,815	33.1	1,860	34.0	1,900	34.9	1,945	35.8	1,985	33,400	99%
Norma 202	32.1	1,795	33.0	1,840	33.9	1,880	34.8	1,925	35.7	1,970	33,400	99%
IMR 4895	32.7	1,780	33.6	1,820	34.5	1,865	35.4	1,910	36.3	1,950	33,500	96%
Accurate 2460	31.1	1,780	32.0	1,825	32.8	1,865	33.6	1,900	34.5	1,945	33,500	89%
Vihtavuori N140	33.1	1,770	34.0	1,815	35.0	1,860	35.9	1,905	36.8	1,945	33,400	96%
Hodgdon CFE 223	34.3	1,755	35.3	1,800	36.2	1,845	37.1	1,885	38.1	1,930	33,400	99%
Accurate 2230	30.1	1,760	30.9	1,800	31.8	1,845	32.6	1,885	33.4	1,920	33,500	87%
IMR 8208 XBR	30.5	1,745	31.4	1,790	32.2	1,830	33.0	1,870	33.9	1,915	33,500	94%
Ramshot TAC	30.7	1,745	31.6	1,790	32.4	1,830	33.3	1,875	34.1	1,915	33,400	93%
Hodgdon Benchmark	29.5	1,745	30.3	1,785	31.1	1,825	32.0	1,870	32.8	1,910	33,400	93%
Hodgdon H4895	31.0	1,735	31.9	1,780	32.7	1,820	33.5	1,860	34.4	1,905	33,500	91%
Hodgdon Varget	32.3	1,730	33.2	1,775	34.1	1,820	35.0	1,860	35.9	1,905	33,300	96%
Alliant Power Pro Varmint	31.2	1,725	32.1	1,770	33.0	1,815	33.8	1,850	34.7	1,895	33,400	94%
Winchester StaBALL Match	32.4	1,715	33.3	1,760	34.2	1,805	35.1	1,845	36.0	1,890	33,400	103%

.35 Whelen

James Howe developed the .35 Whelen in 1922. He was later associated with Griffin & Howe. The cartridge was named for Colonel Townsend Whelen. Whelen publicized it and credited Howe with its development. It is based on the .30-06 Springfield case necked up to accept .358-inch bullets. This allowed a medium-bore cartridge to be built on a standard-length and non-magnum bolt action at modest cost. The cartridge remained a wildcat for more than six decades. Remington standardized it in 1988 and first chambered it in the Model 700 Classic.

Remington's factory loads drive a 200-grain bullet at about 2,675 fps and a 250-grain bullet at about 2,400 fps. Hunters use the cartridge for elk, moose and large bears. It sees particular use at moderate ranges. Brass is easily formed from .30-06 Springfield cases. The cartridge therefore remains popular with handloaders. They can choose from a wide range of .358-inch bullet weights.

Cartridge specifications	
Bullet Diameter	**0.358" (9.09 mm)**
Max Case Length	**2.494" (63.35 mm)**
Case Trim Length	**2.484" (63.10 mm)**
Max COAL	**3.340" (84.84 mm)**
Primer Pocket	**Large Rifle**
Standard Twist	**1:16"**
Case Capacity	**72.1 gr H_2O**
Max Pressure	**62,000 psi (SAAMI)**

180 gr Bullet · 25" barrel

COAL: 3.045" • Bullet length: 0.984" • Seat depth: 0.433" • Usable capacity: 61.1 / 72.1 gr H_2O

Powder	STEP 1 · 90%		STEP 2		STEP 3		STEP 4		STEP 5 · LIMIT			
	gr	fps	gr	fps	gr	fps	gr	fps	gr	fps	psi	Fill
Hodgdon Leverevolution	58.0	2,825	59.6	2,890	61.2	2,955	62.8	3,020	64.4	3,090	61,700	101%
Vihtavuori N530	53.3	2,785	54.8	2,845	56.3	2,910	57.7	2,970	59.2	3,035	61,900	104%
Norma R123	41.9	2,805	43.0	2,860	44.2	2,920	45.4	2,975	46.5	3,030	61,800	83%
Hodgdon CFE BLK	49.7	2,775	51.1	2,835	52.5	2,895	53.8	2,955	55.2	3,015	62,000	93%
Alliant AR-Comp	53.7	2,755	55.2	2,815	56.7	2,875	58.2	2,940	59.7	3,000	61,800	105%
Ramshot TAC	54.2	2,720	55.7	2,780	57.2	2,845	58.7	2,905	60.2	2,970	61,700	105%
Hodgdon H4895	54.9	2,710	56.4	2,775	58.0	2,840	59.5	2,900	61.0	2,965	61,800	103%
Reload Swiss RS40	51.5	2,725	52.9	2,785	54.4	2,850	55.8	2,905	57.2	2,965	61,900	99%
Shooters World Match Rifle	56.1	2,705	57.6	2,765	59.2	2,830	60.8	2,900	62.3	2,960	61,300	105%
IMR 4895	55.8	2,700	57.3	2,760	58.9	2,825	60.5	2,890	62.0	2,955	61,300	105%
Accurate 2460	53.8	2,695	55.3	2,755	56.8	2,815	58.3	2,875	59.8	2,935	61,800	98%
Accurate 2200	49.6	2,695	51.0	2,755	52.4	2,815	53.7	2,870	55.1	2,930	61,900	102%
Accurate 2495	55.4	2,670	56.9	2,735	58.5	2,800	60.0	2,865	61.5	2,925	61,800	101%
Alliant Power Pro Varmint	54.6	2,675	56.1	2,735	57.7	2,800	59.2	2,865	60.7	2,925	60,400	105%
Hodgdon H335	53.6	2,675	55.1	2,735	56.5	2,795	58.0	2,855	59.5	2,915	61,700	96%
IMR 8208 XBR	53.2	2,675	54.7	2,735	56.2	2,800	57.6	2,855	59.1	2,915	59,200	105%
Hodgdon Varget	55.4	2,655	57.0	2,720	58.5	2,785	60.0	2,845	61.6	2,910	60,700	105%
Accurate 2230	51.9	2,655	53.4	2,715	54.8	2,770	56.3	2,830	57.7	2,890	61,900	96%
Hodgdon H322	49.5	2,640	50.9	2,700	52.3	2,760	53.6	2,815	55.0	2,875	61,900	96%
Ramshot X-Terminator	51.3	2,645	52.7	2,700	54.1	2,755	55.6	2,815	57.0	2,875	62,000	94%

200 gr Bullet · 25" barrel

COAL: 3.045" • Bullet length: 1.130" • Seat depth: 0.579" • Usable capacity: 57.4 / 72.1 gr H_2O

Powder	STEP 1 · 90%		STEP 2		STEP 3		STEP 4		STEP 5 · LIMIT			
	gr	fps	gr	fps	gr	fps	gr	fps	gr	fps	psi	Fill
Hodgdon Leverevolution	54.5	2,645	56.0	2,710	57.5	2,770	59.0	2,835	60.5	2,895	61,800	101%
Vihtavuori N530	49.7	2,600	51.1	2,660	52.5	2,720	53.8	2,775	55.2	2,830	61,900	103%
Norma R123	39.0	2,600	40.1	2,655	41.1	2,705	42.2	2,760	43.3	2,815	61,800	82%
Hodgdon CFE BLK	46.4	2,575	47.7	2,630	49.0	2,685	50.3	2,740	51.6	2,800	61,700	93%
Alliant AR-Comp	50.2	2,565	51.6	2,620	53.0	2,680	54.4	2,735	55.8	2,795	62,000	104%
Hodgdon H4895	51.5	2,545	52.9	2,600	54.4	2,660	55.8	2,720	57.2	2,780	62,000	103%
IMR 4895	52.5	2,540	54.0	2,600	55.4	2,660	56.8	2,715	58.3	2,780	62,000	105%
Ramshot TAC	50.9	2,545	52.3	2,600	53.8	2,665	55.2	2,720	56.6	2,780	61,900	105%
Vihtavuori N140	53.1	2,535	54.6	2,595	56.0	2,650	57.5	2,710	59.0	2,775	58,900	105%
Reload Swiss RS40	48.2	2,540	49.6	2,600	50.9	2,655	52.3	2,710	53.6	2,765	61,700	99%
IMR 3031	49.3	2,525	50.7	2,585	52.0	2,640	53.4	2,700	54.8	2,760	61,800	102%
Accurate 2495	51.9	2,505	53.4	2,570	54.8	2,625	56.3	2,690	57.7	2,745	61,900	101%
Alliant Power Pro 1200-R	46.2	2,520	47.5	2,580	48.8	2,635	50.0	2,685	51.3	2,740	61,800	91%
Hodgdon Varget	52.1	2,500	53.5	2,560	55.0	2,620	56.5	2,685	57.9	2,740	61,200	105%
IMR 8208 XBR	50.0	2,510	51.4	2,570	52.8	2,625	54.1	2,680	55.5	2,740	60,100	105%
Hodgdon H335	50.3	2,500	51.7	2,560	53.1	2,615	54.5	2,675	55.9	2,730	61,900	96%
Shooters World The Patriot	48.9	2,480	50.3	2,535	51.6	2,590	52.9	2,640	54.3	2,700	61,700	98%
Accurate 2015	46.8	2,465	48.1	2,520	49.4	2,575	50.7	2,630	52.0	2,685	61,900	94%
Accurate 2230	48.4	2,465	49.8	2,525	51.1	2,575	52.4	2,625	53.8	2,685	62,000	95%
Hodgdon H322	46.4	2,465	47.7	2,520	49.0	2,575	50.2	2,625	51.5	2,680	62,000	95%

250 gr Bullet · 25" barrel

COAL: 3.232" • Bullet length: 1.232" • Seat depth: 0.495" • Usable capacity: 59.5 / 72.1 gr H_2O

Powder	STEP 1 · 90%		STEP 2		STEP 3		STEP 4		STEP 5 · LIMIT			
	gr	fps	gr	fps	gr	fps	gr	fps	gr	fps	psi	Fill
Hodgdon Leverevolution	52.6	2,395	54.0	2,450	55.5	2,505	57.0	2,560	58.4	2,615	61,800	94%
Reload Swiss RS52	53.4	2,360	54.9	2,415	56.3	2,470	57.8	2,525	59.3	2,580	61,900	105%
Hodgdon BL-C(2)	53.6	2,350	55.1	2,405	56.6	2,460	58.1	2,515	59.6	2,575	61,800	100%
Winchester 748	54.3	2,355	55.8	2,410	57.3	2,465	58.8	2,520	60.3	2,575	61,900	104%
Hodgdon CFE 223	54.4	2,350	55.9	2,405	57.4	2,460	58.9	2,515	60.4	2,570	61,800	103%
Norma 201	49.2	2,350	50.6	2,405	52.0	2,455	53.3	2,510	54.7	2,565	61,900	102%
Accurate 2520	51.5	2,345	52.9	2,395	54.4	2,450	55.8	2,500	57.2	2,550	61,900	99%
Vihtavuori N540	52.3	2,345	53.8	2,395	55.2	2,445	56.6	2,500	58.1	2,550	61,700	104%
Vihtavuori N140	51.6	2,315	53.0	2,370	54.5	2,425	55.9	2,475	57.3	2,525	61,800	98%
Accurate 2700	55.2	2,300	56.7	2,350	58.3	2,410	59.8	2,465	61.3	2,520	60,300	105%
Hodgdon Varget	50.5	2,295	51.9	2,345	53.3	2,395	54.7	2,450	56.1	2,505	61,800	98%
Shooters World The Creed	51.0	2,290	52.4	2,340	53.9	2,395	55.3	2,450	56.7	2,500	61,800	99%
Hodgdon H414	55.2	2,270	56.7	2,325	58.3	2,385	59.8	2,435	61.3	2,495	58,800	105%
Hodgdon H4895	49.3	2,290	50.7	2,340	52.0	2,390	53.4	2,440	54.8	2,495	62,000	95%
IMR 4895	49.9	2,285	51.3	2,340	52.6	2,385	54.0	2,440	55.4	2,490	61,800	96%
Vihtavuori N530	46.1	2,295	47.4	2,345	48.7	2,395	49.9	2,440	51.2	2,490	62,000	92%
Alliant Reloder 15	50.7	2,270	52.1	2,320	53.5	2,370	54.9	2,420	56.3	2,475	61,800	101%
IMR 8208 XBR	48.0	2,265	49.3	2,315	50.6	2,360	52.0	2,415	53.3	2,460	61,800	97%
Shooters World Tactical Rifle	48.3	2,255	49.6	2,305	51.0	2,355	52.4	2,410	53.7	2,460	62,000	93%
IMR 4064	49.4	2,245	50.8	2,295	52.1	2,345	53.5	2,395	54.9	2,445	62,000	99%

.350 Remington Magnum

Remington introduced the .350 Remington Magnum in 1965 for its Model 600 carbine. That carbine had an 18.5-inch barrel. The cartridge was one of the first belted magnums designed for a short action. Its case was derived from the 7mm Remington Magnum by shortening it and necking it to .358 caliber. The 7mm Remington Magnum itself descends from the .375 H&H Magnum. Remington later offered the cartridge in the Model 660, Model 673 and Model 700 rifles and in the XP-100 handgun.

Remington's original factory loads used a 200-grain Core-Lokt bullet at 2,710 fps and a 250-grain bullet at 2,410 fps. Recoil and muzzle blast were considerable in the short Model 600 carbine. Sales were poor. Remington dropped it as a regular factory chambering in 1974. The cartridge later returned in some Remington rifles. Factory ammunition has remained available. The variety is limited. It is used for elk, moose, bear and other large game at short to moderate ranges and especially in dense cover.

Cartridge specifications	
Bullet Diameter	**0.358" (9.09 mm)**
Max Case Length	**2.170" (55.12 mm)**
Case Trim Length	**2.160" (54.87 mm)**
Max COAL	**2.800" (71.12 mm)**
Primer Pocket	**Large Rifle**
Standard Twist	**1:16"**
Case Capacity	**72.2 gr H_2O**
Max Pressure	**4,300 bar / 62,366 psi (C.I.P.)**

180 gr Bullet · 25" barrel

COAL: 2.740" • Bullet length: 0.937" • Seat depth: 0.367" • Usable capacity: 62.9 / 72.2 gr H_2O

Powder	STEP 1 · 90%		STEP 2		STEP 3		STEP 4		STEP 5 · LIMIT			
	gr	fps	gr	fps	gr	fps	gr	fps	gr	fps	psi	Fill
Hodgdon Leverevolution	59.8	2,850	61.5	2,915	63.1	2,980	64.8	3,050	66.4	3,115	62,200	101%
Vihtavuori N530	54.8	2,805	56.3	2,865	57.8	2,925	59.4	2,990	60.9	3,055	62,300	104%
Norma R123	43.2	2,820	44.4	2,880	45.6	2,935	46.8	2,995	48.0	3,050	62,200	83%
Accurate 2520	57.7	2,770	59.3	2,835	60.9	2,895	62.5	2,960	64.1	3,025	60,100	105%
Hodgdon CFE BLK	51.1	2,785	52.5	2,845	54.0	2,910	55.4	2,965	56.8	3,025	62,200	93%
Alliant AR-Comp	55.4	2,775	56.9	2,835	58.5	2,895	60.0	2,960	61.5	3,020	62,300	105%
Hodgdon H4895	57.2	2,760	58.8	2,825	60.4	2,890	61.9	2,950	63.5	3,015	62,300	105%
Reload Swiss RS40	53.1	2,745	54.6	2,805	56.0	2,865	57.5	2,925	59.0	2,990	62,200	100%
Shooters World Match Rifle	57.7	2,725	59.3	2,790	60.9	2,855	62.5	2,920	64.1	2,985	61,200	105%
Hodgdon BL-C(2)	59.2	2,705	60.9	2,775	62.5	2,840	64.2	2,905	65.8	2,970	59,500	105%
Alliant Power Pro 1200-R	51.0	2,730	52.4	2,785	53.9	2,850	55.3	2,910	56.7	2,965	62,400	92%
Accurate 2460	55.4	2,710	57.0	2,775	58.5	2,835	60.0	2,890	61.6	2,955	62,300	98%
Accurate 2495	57.2	2,700	58.8	2,765	60.4	2,830	61.9	2,890	63.5	2,955	62,300	102%
IMR 3031	53.8	2,705	55.3	2,765	56.8	2,825	58.3	2,890	59.8	2,950	62,200	102%
Shooters World AR Plus	52.0	2,710	53.5	2,770	54.9	2,830	56.3	2,885	57.8	2,950	62,300	93%
Hodgdon H335	55.2	2,695	56.7	2,755	58.3	2,820	59.8	2,880	61.3	2,940	62,300	96%
Accurate 2015	51.5	2,665	52.9	2,720	54.4	2,785	55.8	2,840	57.2	2,900	62,100	94%
Hodgdon H322	51.0	2,660	52.4	2,715	53.9	2,780	55.3	2,835	56.7	2,895	62,100	96%
Alliant Reloder 7	47.8	2,650	49.1	2,705	50.5	2,765	51.8	2,820	53.1	2,875	62,400	90%
Hodgdon H4198	46.4	2,640	47.7	2,695	49.0	2,750	50.2	2,800	51.5	2,860	62,400	94%

200 gr Bullet · 25" barrel

COAL: 2.710" • Bullet length: 1.043" • Seat depth: 0.504" • Usable capacity: 59.4 / 72.2 gr H_2O

Powder	STEP 1 · 90%		STEP 2		STEP 3		STEP 4		STEP 5 · LIMIT			
	gr	fps	gr	fps	gr	fps	gr	fps	gr	fps	psi	Fill
Hodgdon Leverevolution	56.3	2,670	57.9	2,735	59.5	2,800	61.0	2,860	62.6	2,925	62,200	101%
Vihtavuori N530	51.2	2,620	52.6	2,680	54.0	2,735	55.5	2,795	56.9	2,855	62,200	103%
Accurate 2520	54.5	2,600	56.0	2,660	57.5	2,720	59.1	2,785	60.6	2,840	60,800	105%
Norma R123	40.3	2,620	41.4	2,670	42.5	2,725	43.7	2,780	44.8	2,835	62,100	82%
Hodgdon H4895	53.7	2,585	55.2	2,645	56.7	2,705	58.2	2,765	59.7	2,825	62,300	104%
Hodgdon CFE BLK	48.1	2,600	49.4	2,650	50.8	2,710	52.1	2,765	53.4	2,820	62,300	93%
Alliant AR-Comp	51.8	2,580	53.3	2,640	54.7	2,695	56.1	2,750	57.6	2,810	62,300	104%
IMR 4895	54.3	2,570	55.8	2,630	57.3	2,690	58.8	2,750	60.3	2,810	58,800	105%
Ramshot TAC	52.7	2,570	54.2	2,630	55.7	2,690	57.1	2,750	58.6	2,810	62,300	105%
Shooters World Match Rifle	54.5	2,565	56.0	2,625	57.5	2,685	59.1	2,750	60.6	2,810	61,600	105%
Vihtavuori N140	55.0	2,565	56.5	2,625	58.0	2,680	59.6	2,745	61.1	2,805	59,500	105%
Hodgdon BL-C(2)	55.9	2,550	57.5	2,615	59.0	2,675	60.5	2,735	62.1	2,800	59,400	105%
Hodgdon Varget	53.9	2,530	55.4	2,590	56.9	2,650	58.4	2,710	59.9	2,775	59,700	105%
IMR 4320	54.1	2,530	55.6	2,590	57.1	2,650	58.6	2,710	60.1	2,775	62,100	102%
Alliant Power Pro 1200-R	47.8	2,545	49.1	2,600	50.5	2,660	51.8	2,710	53.1	2,765	62,400	91%
IMR 3031	50.6	2,535	52.0	2,590	53.4	2,650	54.8	2,705	56.2	2,765	62,300	101%
Accurate 2460	51.8	2,525	53.3	2,585	54.7	2,640	56.1	2,690	57.6	2,750	62,100	97%
Hodgdon H335	51.9	2,520	53.4	2,580	54.8	2,635	56.3	2,695	57.7	2,750	62,200	96%
Shooters World The Patriot	50.6	2,500	52.0	2,555	53.4	2,610	54.8	2,665	56.2	2,725	62,200	98%
Hodgdon H4198	43.4	2,450	44.6	2,500	45.8	2,555	47.0	2,605	48.2	2,655	62,300	93%

250 gr Bullet · 25" barrel

COAL: 2.800" • Bullet length: 1.202" • Seat depth: 0.572" • Usable capacity: 57.7 / 72.2 gr H_2O

Powder	STEP 1 · 90%		STEP 2		STEP 3		STEP 4		STEP 5 · LIMIT			
	gr	fps	gr	fps	gr	fps	gr	fps	gr	fps	psi	Fill
Hodgdon Leverevolution	52.3	2,380	53.8	2,435	55.2	2,485	56.6	2,540	58.1	2,595	62,300	96%
Norma 201	49.0	2,335	50.4	2,390	51.7	2,440	53.0	2,490	54.4	2,545	62,300	105%
Hodgdon CFE 223	53.5	2,310	55.0	2,365	56.5	2,420	57.9	2,475	59.4	2,530	60,700	105%
IMR 4895	50.9	2,315	52.3	2,370	53.7	2,420	55.1	2,475	56.5	2,525	62,100	101%
Shooters World Match Rifle	51.0	2,305	52.4	2,355	53.9	2,410	55.3	2,465	56.7	2,520	62,300	101%
Winchester 748	53.0	2,300	54.5	2,355	56.0	2,410	57.4	2,465	58.9	2,520	59,700	105%
Vihtavuori N140	51.4	2,305	52.8	2,355	54.3	2,410	55.7	2,460	57.1	2,515	62,300	101%
Hodgdon Varget	50.8	2,300	52.2	2,350	53.6	2,405	55.0	2,455	56.4	2,510	62,200	102%
Accurate 2520	50.5	2,300	51.9	2,350	53.3	2,400	54.7	2,455	56.1	2,505	62,200	100%
Hodgdon H4895	49.5	2,290	50.9	2,340	52.3	2,395	53.6	2,445	55.0	2,495	62,100	99%
IMR 4064	50.6	2,280	52.0	2,335	53.4	2,385	54.8	2,435	56.2	2,490	62,300	104%
Alliant TS 15.5	50.5	2,270	51.9	2,325	53.3	2,380	54.7	2,430	56.1	2,485	60,100	105%
IMR 4320	50.6	2,275	52.0	2,325	53.4	2,380	54.8	2,430	56.2	2,485	62,100	98%
Shooters World The Creed	50.8	2,275	52.2	2,325	53.6	2,380	55.0	2,430	56.4	2,485	62,300	102%
Vihtavuori N135	49.0	2,275	50.4	2,325	51.7	2,370	53.0	2,420	54.4	2,470	62,100	102%
Norma 202	49.1	2,260	50.5	2,310	51.9	2,365	53.2	2,410	54.6	2,465	62,100	103%
Shooters World Tactical Rifle	48.1	2,240	49.4	2,290	50.8	2,340	52.1	2,390	53.4	2,440	62,200	95%
IMR 3031	46.6	2,235	47.9	2,285	49.2	2,335	50.5	2,385	51.8	2,435	62,200	96%
Hodgdon H335	48.1	2,230	49.4	2,275	50.8	2,330	52.1	2,380	53.4	2,425	62,200	92%
Hodgdon H322	44.2	2,175	45.4	2,225	46.7	2,275	47.9	2,320	49.1	2,365	62,100	90%

.356 Winchester

Winchester introduced the .356 Winchester in 1982 for a strengthened version of its Model 94 lever-action rifle. That rifle was marketed as the Model 94 XTR Big Bore. The cartridge was developed from the .307 Winchester case. It is essentially a semi-rimmed counterpart of the .358 Winchester. The .358 in turn is the .308 Winchester necked up to accept .358-inch bullets. The rim allows reliable extraction in lever actions. The cartridge was also offered in the Marlin Model 336ER.

Factory loads have used 200- and 250-grain bullets. Their velocities are slightly below those of comparable .358 Winchester loads. The cartridge is suited to deer, black bear and other large game at short to moderate ranges. It is particularly suited to timber and brush. Marlin dropped the Model 336ER in 1987. Winchester discontinued, reintroduced and finally dropped the Model 94 in this caliber by the mid-1990s. Factory ammunition has since been produced only intermittently. Handloading keeps most rifles in service.

Cartridge specifications	
Bullet Diameter	**0.358" (9.09 mm)**
Max Case Length	**2.015" (51.18 mm)**
Case Trim Length	**2.005" (50.93 mm)**
Max COAL	**2.560" (65.02 mm)**
Primer Pocket	**Large Rifle**
Standard Twist	**1:12"**
Case Capacity	**55.3 gr H_2O**
Max Pressure	**4,150 bar / 60,191 psi (C.I.P.)**

180 gr Bullet · 25" barrel

COAL: 2.547" • Bullet length: 0.890" • Seat depth: 0.358" • Usable capacity: 46.2 / 55.3 gr H_2O

Powder	STEP 1 · 90%		STEP 2		STEP 3		STEP 4		STEP 5 · LIMIT			
	gr	fps	gr	fps	gr	fps	gr	fps	gr	fps	psi	Fill
Norma R123	35.2	2,620	36.2	2,680	37.2	2,735	38.1	2,785	39.1	2,845	59,900	92%
Hodgdon CFE BLK	41.3	2,580	42.4	2,635	43.6	2,695	44.8	2,755	45.9	2,810	60,000	102%
Shooters World SBR-SOCOM	36.0	2,545	37.0	2,600	38.0	2,655	39.0	2,710	40.0	2,765	60,100	89%
Alliant Power Pro 1200-R	41.4	2,505	42.5	2,560	43.7	2,620	44.9	2,680	46.0	2,735	59,900	101%
Norma 200	40.2	2,490	41.3	2,545	42.5	2,605	43.6	2,660	44.7	2,715	58,800	105%
Shooters World AR Plus	41.9	2,480	43.0	2,530	44.2	2,590	45.4	2,650	46.5	2,705	60,000	102%
Alliant Power Pro 300-MP	33.4	2,480	34.3	2,535	35.3	2,590	36.2	2,640	37.1	2,685	60,200	89%
Accurate 1680	38.5	2,460	39.6	2,515	40.6	2,565	41.7	2,620	42.8	2,675	60,000	95%
Ramshot X-Terminator	43.1	2,455	44.3	2,510	45.5	2,565	46.7	2,620	47.9	2,675	58,100	105%
Alliant Reloder 7	38.6	2,440	39.7	2,495	40.8	2,550	41.8	2,605	42.9	2,660	59,800	99%
Hodgdon H335	44.1	2,420	45.3	2,480	46.5	2,535	47.8	2,595	49.0	2,655	59,900	105%
Accurate 2015	41.0	2,410	42.1	2,465	43.3	2,525	44.4	2,580	45.5	2,635	60,000	102%
Hodgdon H4198	37.2	2,425	38.2	2,475	39.3	2,535	40.3	2,585	41.3	2,635	60,200	103%
Hodgdon H322	40.6	2,405	41.7	2,460	42.9	2,520	44.0	2,575	45.1	2,630	59,900	104%
Accurate LT-30	38.8	2,380	39.9	2,435	41.0	2,490	42.0	2,540	43.1	2,595	60,000	94%
IMR 4198	36.3	2,375	37.3	2,430	38.3	2,480	39.3	2,530	40.3	2,580	60,100	105%
Vihtavuori N120	34.7	2,375	35.7	2,425	36.7	2,480	37.6	2,525	38.6	2,580	60,200	97%

200 gr Bullet · 25" barrel

COAL: 2.550" • Bullet length: 0.959" • Seat depth: 0.424" • Usable capacity: 44.5 / 55.3 gr H_2O

Powder	STEP 1 · 90%		STEP 2		STEP 3		STEP 4		STEP 5 · LIMIT			
	gr	fps	gr	fps	gr	fps	gr	fps	gr	fps	psi	Fill
Norma R123	33.3	2,450	34.2	2,500	35.1	2,550	36.1	2,605	37.0	2,655	59,900	90%
Hodgdon CFE BLK	39.3	2,410	40.4	2,465	41.5	2,520	42.6	2,575	43.7	2,630	59,900	101%
Shooters World SBR-SOCOM	34.0	2,370	35.0	2,425	35.9	2,470	36.8	2,520	37.8	2,575	59,900	87%
Norma 200	38.4	2,355	39.5	2,410	40.5	2,460	41.6	2,515	42.7	2,570	60,200	104%
Alliant Power Pro 1200-R	39.3	2,350	40.4	2,405	41.5	2,460	42.6	2,515	43.7	2,565	59,800	100%
Shooters World AR Plus	40.0	2,330	41.1	2,385	42.2	2,435	43.3	2,490	44.4	2,545	60,200	101%
Ramshot X-Terminator	41.2	2,315	42.4	2,370	43.5	2,420	44.6	2,470	45.8	2,525	60,100	104%
Hodgdon H335	42.1	2,285	43.3	2,340	44.5	2,400	45.6	2,450	46.8	2,505	59,900	104%
Accurate 1680	36.6	2,295	37.6	2,345	38.7	2,400	39.7	2,450	40.7	2,500	60,000	94%
Alliant Power Pro 300-MP	31.5	2,305	32.4	2,355	33.3	2,405	34.1	2,445	35.0	2,495	59,800	87%
Alliant Reloder 7	36.6	2,285	37.6	2,335	38.7	2,390	39.7	2,440	40.7	2,490	60,000	97%
Accurate 2015	39.1	2,265	40.2	2,320	41.3	2,375	42.3	2,420	43.4	2,475	59,900	101%
Hodgdon H322	38.7	2,265	39.8	2,315	40.9	2,370	41.9	2,420	43.0	2,475	59,900	103%
Shooters World The Patriot	40.4	2,260	41.5	2,310	42.6	2,365	43.8	2,420	44.9	2,470	56,700	105%
Hodgdon H4198	35.3	2,265	36.3	2,315	37.3	2,365	38.2	2,415	39.2	2,465	60,100	101%
Accurate LT-32	38.2	2,245	39.3	2,300	40.3	2,350	41.4	2,405	42.4	2,450	58,100	105%
Accurate LT-30	36.9	2,230	37.9	2,280	39.0	2,330	40.0	2,380	41.0	2,430	59,900	93%
IMR 4198	34.3	2,215	35.3	2,265	36.2	2,310	37.1	2,355	38.1	2,405	60,200	103%
Vihtavuori N120	32.9	2,210	33.8	2,255	34.7	2,305	35.6	2,350	36.5	2,395	59,900	95%

220 gr Bullet · 25" barrel

COAL: 2.550" • Bullet length: 1.032" • Seat depth: 0.496" • Usable capacity: 42.7 / 55.3 gr H_2O

Powder	STEP 1 · 90%		STEP 2		STEP 3		STEP 4		STEP 5 · LIMIT			
	gr	fps	gr	fps	gr	fps	gr	fps	gr	fps	psi	Fill
Norma R123	31.5	2,295	32.4	2,345	33.3	2,395	34.1	2,440	35.0	2,485	60,000	89%
Hodgdon CFE BLK	37.4	2,260	38.4	2,310	39.5	2,365	40.5	2,415	41.5	2,465	59,800	100%
Alliant Power Pro 1200-R	37.4	2,215	38.4	2,265	39.5	2,320	40.5	2,365	41.5	2,415	60,000	99%
Norma 200	36.3	2,210	37.3	2,260	38.3	2,310	39.3	2,355	40.3	2,405	59,900	102%
Shooters World SBR-SOCOM	32.1	2,210	33.0	2,260	33.9	2,305	34.8	2,355	35.7	2,405	59,800	86%
Shooters World AR Plus	38.0	2,185	39.0	2,235	40.1	2,290	41.2	2,340	42.2	2,390	60,000	100%
Accurate 2460	40.2	2,180	41.3	2,230	42.5	2,285	43.6	2,335	44.7	2,385	58,300	105%
Reload Swiss RS40	38.0	2,175	39.0	2,225	40.1	2,280	41.2	2,330	42.2	2,380	57,600	105%
Hodgdon H335	40.1	2,160	41.2	2,210	42.4	2,265	43.5	2,315	44.6	2,365	60,100	103%
Ramshot X-Terminator	38.9	2,165	40.0	2,215	41.0	2,260	42.1	2,310	43.2	2,360	59,900	102%
Shooters World The Patriot	38.8	2,145	39.9	2,195	41.0	2,245	42.0	2,290	43.1	2,345	58,500	105%
Accurate 1680	34.7	2,145	35.7	2,195	36.7	2,245	37.6	2,290	38.6	2,340	59,900	93%
Accurate 2015	37.2	2,130	38.2	2,180	39.3	2,230	40.3	2,280	41.3	2,330	59,900	100%
Alliant Reloder 10x	35.7	2,130	36.7	2,180	37.7	2,230	38.7	2,280	39.7	2,330	56,900	105%
Alliant Reloder 7	34.7	2,140	35.7	2,190	36.6	2,235	37.5	2,280	38.5	2,330	60,000	96%
Hodgdon H322	36.8	2,130	37.8	2,180	38.8	2,225	39.9	2,280	40.9	2,330	60,000	102%
Accurate LT-32	36.5	2,120	37.5	2,170	38.5	2,220	39.6	2,270	40.6	2,320	59,100	105%
Shooters World Tactical Rifle	39.2	2,105	40.3	2,155	41.4	2,210	42.4	2,255	43.5	2,310	56,700	105%
Hodgdon H4198	33.4	2,115	34.3	2,160	35.3	2,210	36.2	2,260	37.1	2,305	59,900	100%
IMR 4198	32.3	2,060	33.2	2,105	34.1	2,150	35.0	2,195	35.9	2,240	60,000	101%

.358 Norma Magnum

The Swedish ammunition maker Norma introduced the .358 Norma Magnum in 1959. The cartridge was developed by Nils Kvale. He shortened the belted .300 H&H Magnum case and necked it up to hold .358-inch bullets. The result resembles a necked-up .338 Winchester Magnum. The cartridge was designed with American hunters in mind. Yet it was released with no factory rifles or loaded ammunition. At first Norma supplied brass and chamber reamers.

Husqvarna and Schultz & Larsen soon chambered rifles for it. Many American gunsmiths converted Mauser 98 and Springfield actions. Norma's factory load drives a 250-grain bullet at about 2,750 fps. The cartridge is suited to elk, moose, brown bear and bison. It also suits large plains game in Africa. Most countries there require a minimum of .375 caliber for dangerous game. The .358 has remained a niche cartridge. Even so Norma continues to produce ammunition and brass.

Cartridge specifications	
Bullet Diameter	**0.358" (9.09 mm)**
Max Case Length	**2.520" (64.00 mm)**
Case Trim Length	**2.510" (63.75 mm)**
Max COAL	**3.346" (85.00 mm)**
Primer Pocket	**Large Rifle**
Standard Twist	**1:12"**
Case Capacity	**88.3 gr H_2O**
Max Pressure	**4,400 bar / 63,817 psi (C.I.P.)**

180 gr Bullet · 25" barrel

COAL: 3.052" • Bullet length: 0.890" • Seat depth: 0.358" • Usable capacity: 79.2 / 88.3 gr H_2O

Powder	STEP 1 · 90%		STEP 2		STEP 3		STEP 4		STEP 5 · LIMIT			
	gr	fps	gr	fps	gr	fps	gr	fps	gr	fps	psi	Fill
Hodgdon Leverevolution	68.8	3,090	70.7	3,155	72.6	3,225	74.5	3,295	76.4	3,365	63,700	92%
Reload Swiss RS52	69.8	3,030	71.7	3,100	73.7	3,175	75.6	3,245	77.5	3,315	63,800	103%
Hodgdon CFE 223	71.2	3,025	73.2	3,095	75.2	3,170	77.1	3,235	79.1	3,310	63,800	102%
Alliant Reloder 15	69.9	3,030	71.9	3,100	73.8	3,165	75.8	3,235	77.7	3,305	63,700	105%
Hodgdon BL-C(2)	70.0	3,020	72.0	3,095	73.9	3,165	75.8	3,230	77.8	3,305	63,700	99%
Vihtavuori N540	68.9	3,035	70.8	3,100	72.8	3,170	74.7	3,240	76.6	3,305	63,700	103%
Winchester 748	70.9	3,015	72.9	3,085	74.8	3,155	76.8	3,225	78.8	3,300	63,600	102%
IMR 4895	67.3	3,005	69.2	3,075	71.0	3,140	72.9	3,210	74.8	3,280	63,700	98%
Accurate 2520	66.2	2,995	68.0	3,060	69.8	3,125	71.7	3,190	73.5	3,255	63,700	95%
Hodgdon H4895	65.7	2,990	67.5	3,055	69.3	3,120	71.2	3,190	73.0	3,255	63,800	95%
IMR 4064	67.8	2,980	69.7	3,050	71.5	3,110	73.4	3,180	75.3	3,250	63,800	102%
Hodgdon H414	73.4	2,940	75.5	3,015	77.5	3,085	79.5	3,155	81.6	3,235	63,700	105%
Reload Swiss RS50	68.8	2,965	70.7	3,035	72.6	3,100	74.5	3,170	76.4	3,235	63,800	101%
IMR 4320	66.8	2,960	68.7	3,030	70.5	3,095	72.3	3,160	74.2	3,230	63,700	94%
Ramshot TAC	64.4	2,970	66.2	3,035	68.0	3,100	69.8	3,165	71.6	3,230	63,700	96%
Shooters World The Creed	67.3	2,955	69.2	3,025	71.0	3,090	72.9	3,155	74.8	3,225	63,800	98%
Norma 202	65.3	2,965	67.1	3,025	68.9	3,090	70.8	3,160	72.6	3,220	63,700	99%
Winchester StaBALL Match	66.7	2,935	68.5	3,000	70.4	3,065	72.3	3,135	74.1	3,200	60,500	105%
IMR 3031	62.4	2,940	64.1	3,005	65.8	3,065	67.6	3,130	69.3	3,195	63,800	93%
Hodgdon Benchmark	62.0	2,935	63.7	2,995	65.5	3,060	67.2	3,125	68.9	3,185	63,800	96%

225 gr Bullet · 25" barrel

COAL: 3.260" • Bullet length: 1.378" • Seat depth: 0.638" • Usable capacity: 72.1 / 88.3 gr H_2O

Powder	STEP 1 · 90%		STEP 2		STEP 3		STEP 4		STEP 5 · LIMIT			
	gr	fps	gr	fps	gr	fps	gr	fps	gr	fps	psi	Fill
Hodgdon Leverevolution	61.3	2,700	63.0	2,760	64.7	2,820	66.4	2,880	68.1	2,940	63,600	90%
Ramshot Big Game	66.2	2,670	68.0	2,735	69.8	2,795	71.7	2,860	73.5	2,925	63,600	104%
Reload Swiss RS52	62.6	2,675	64.3	2,735	66.0	2,800	67.8	2,860	69.5	2,925	63,700	101%
Winchester 748	63.6	2,670	65.4	2,730	67.2	2,795	68.9	2,855	70.7	2,920	63,800	101%
Hodgdon BL-C(2)	62.9	2,665	64.7	2,730	66.4	2,790	68.2	2,855	69.9	2,915	63,700	97%
Winchester StaBALL 6.5	67.5	2,660	69.4	2,725	71.3	2,785	73.1	2,850	75.0	2,915	60,400	105%
Alliant Power Pro 2000-MR	64.8	2,660	66.6	2,720	68.4	2,785	70.2	2,845	72.0	2,910	63,700	105%
Hodgdon CFE 223	63.6	2,660	65.4	2,720	67.2	2,785	68.9	2,840	70.7	2,905	63,700	100%
Alliant Reloder 15	61.7	2,650	63.4	2,705	65.2	2,770	66.9	2,830	68.6	2,890	63,600	102%
Shooters World Match Rifle	60.0	2,625	61.7	2,685	63.4	2,745	65.0	2,805	66.7	2,865	63,700	95%
Winchester 760	66.2	2,610	68.0	2,670	69.9	2,740	71.8	2,805	73.6	2,865	63,100	105%
Vihtavuori N540	60.7	2,635	62.4	2,690	64.1	2,750	65.7	2,805	67.4	2,860	63,800	99%
Hodgdon H380	64.1	2,610	65.9	2,670	67.7	2,730	69.4	2,790	71.2	2,855	61,200	105%
IMR 4895	59.4	2,620	61.0	2,675	62.7	2,740	64.3	2,795	66.0	2,855	63,600	95%
IMR 4320	59.9	2,605	61.6	2,665	63.3	2,725	64.9	2,785	66.6	2,845	63,800	93%
Vihtavuori N140	60.2	2,615	61.9	2,670	63.6	2,730	65.2	2,785	66.9	2,845	63,700	95%
Hodgdon H4895	58.2	2,605	59.8	2,660	61.5	2,720	63.1	2,775	64.7	2,835	63,800	93%
IMR 4064	59.8	2,605	61.5	2,665	63.1	2,720	64.8	2,780	66.4	2,835	63,600	99%
Norma 203B	58.2	2,580	59.8	2,640	61.5	2,700	63.1	2,755	64.7	2,815	63,600	97%
IMR 3031	55.3	2,555	56.8	2,610	58.3	2,665	59.9	2,725	61.4	2,775	63,700	91%

250 gr Bullet · 25" barrel

COAL: 3.280" • Bullet length: 1.202" • Seat depth: 0.441" • Usable capacity: 77.1 / 88.3 gr H_2O

Powder	STEP 1 · 90%		STEP 2		STEP 3		STEP 4		STEP 5 · LIMIT			
	gr	fps	gr	fps	gr	fps	gr	fps	gr	fps	psi	Fill
Hodgdon SUPERFORMANCE	73.5	2,625	75.5	2,690	77.6	2,755	79.7	2,825	81.7	2,890	63,800	104%
Winchester StaBALL 6.5	69.8	2,620	71.7	2,680	73.7	2,740	75.6	2,805	77.5	2,865	63,600	101%
Hodgdon H4350	70.4	2,595	72.4	2,655	74.3	2,720	76.3	2,780	78.2	2,845	63,600	102%
Reload Swiss RS60	68.7	2,585	70.6	2,650	72.5	2,710	74.4	2,775	76.3	2,840	63,600	102%
Norma 204	69.3	2,570	71.2	2,630	73.2	2,695	75.1	2,755	77.0	2,820	63,200	105%
Ramshot Big Game	67.0	2,585	68.8	2,640	70.7	2,700	72.6	2,760	74.4	2,820	63,600	98%
Reload Swiss RS52	63.5	2,585	65.3	2,645	67.0	2,700	68.8	2,760	70.5	2,820	63,700	96%
Winchester 760	67.7	2,555	69.6	2,615	71.5	2,675	73.3	2,735	75.2	2,795	63,600	100%
IMR 4955	72.4	2,535	74.4	2,595	76.4	2,660	78.4	2,725	80.4	2,790	63,000	105%
Hodgdon H380	65.7	2,550	67.5	2,605	69.3	2,665	71.2	2,725	73.0	2,785	63,800	101%
Hodgdon CFE 223	64.2	2,555	66.0	2,610	67.8	2,670	69.5	2,725	71.3	2,780	63,600	94%
Alliant Reloder 15	61.7	2,535	63.4	2,590	65.1	2,645	66.8	2,700	68.5	2,755	63,600	95%
IMR 4320	60.9	2,520	62.6	2,575	64.3	2,630	66.0	2,690	67.7	2,745	63,800	88%
Vihtavuori N150	62.0	2,525	63.7	2,580	65.5	2,635	67.2	2,690	68.9	2,745	63,700	100%
Winchester StaBALL Match	61.7	2,515	63.4	2,570	65.1	2,625	66.8	2,680	68.5	2,735	63,800	100%
Accurate 4064	61.2	2,510	62.9	2,565	64.6	2,620	66.3	2,675	68.0	2,730	63,600	98%
IMR 4064	60.1	2,505	61.8	2,560	63.5	2,615	65.1	2,665	66.8	2,720	63,700	93%
IMR 4895	59.3	2,500	61.0	2,555	62.6	2,610	64.3	2,665	65.9	2,715	63,800	88%
Hodgdon H4895	58.3	2,485	59.9	2,535	61.5	2,590	63.2	2,645	64.8	2,700	63,800	87%
IMR 3031	55.7	2,445	57.3	2,500	58.8	2,550	60.4	2,600	61.9	2,650	63,800	86%

.358 Winchester

Winchester introduced the .358 Winchester in 1955 by necking the .308 Winchester case up to accept .358-inch bullets. The .243 Winchester appeared the same year. The .358 was chambered in the Model 70 bolt-action and Model 88 lever-action rifles. It later appeared in the Savage Model 99 and Browning BLR. The .35 Whelen is based on the .30-06 Springfield. The .358 relates to the .35 Whelen as the .308 Winchester relates to the .30-06. It is more powerful than the .35 Remington and .348 Winchester. In Europe it is also known as the 9.1x51mm.

Winchester's Super-X Silvertip load fires a 200-grain bullet at an advertised 2,490 fps. Hunters use it for deer, black bear and similar game at moderate ranges. It is particularly suited to wooded country. Its popularity has declined. Several companies still load ammunition. Cases are easily formed from .308 Winchester brass. Browning has continued to chamber the BLR for the cartridge.

Cartridge specifications	
Bullet Diameter	**0.358" (9.09 mm)**
Max Case Length	**2.015" (51.18 mm)**
Case Trim Length	**2.005" (50.93 mm)**
Max COAL	**2.780" (70.61 mm)**
Primer Pocket	**Large Rifle**
Standard Twist	**1:12"**
Case Capacity	**57.3 gr H_2O**
Max Pressure	**4,050 bar / 58,740 psi (C.I.P.)**

180 gr Bullet · 25" barrel

COAL: 2.425" • Bullet length: 0.890" • Seat depth: 0.480" • Usable capacity: 45.1 / 57.3 gr H_2O

Powder	STEP 1 · 90%		STEP 2		STEP 3		STEP 4		STEP 5 · LIMIT			
	gr	fps	gr	fps	gr	fps	gr	fps	gr	fps	psi	Fill
Norma R123	34.3	2,585	35.3	2,640	36.2	2,695	37.1	2,745	38.1	2,800	58,500	92%
Hodgdon CFE BLK	40.3	2,545	41.4	2,600	42.5	2,655	43.7	2,720	44.8	2,775	58,700	102%
Shooters World SBR-SOCOM	35.1	2,510	36.1	2,565	37.0	2,615	38.0	2,670	39.0	2,725	58,700	89%
Alliant Power Pro 1200-R	40.4	2,465	41.5	2,520	42.6	2,580	43.8	2,640	44.9	2,695	58,600	101%
Norma 200	39.2	2,450	40.3	2,505	41.4	2,565	42.5	2,620	43.6	2,675	57,500	105%
Shooters World AR Plus	40.8	2,440	41.9	2,490	43.0	2,545	44.2	2,605	45.3	2,660	58,400	102%
Alliant Power Pro 300-MP	32.5	2,445	33.4	2,495	34.3	2,545	35.2	2,595	36.1	2,645	58,500	89%
Accurate 1680	37.5	2,420	38.5	2,470	39.6	2,530	40.7	2,585	41.7	2,635	58,500	95%
Ramshot X-Terminator	42.0	2,415	43.2	2,470	44.4	2,525	45.5	2,580	46.7	2,635	56,400	105%
Alliant Reloder 7	37.6	2,405	38.6	2,455	39.7	2,510	40.8	2,570	41.8	2,620	58,400	98%
Hodgdon H335	43.1	2,385	44.3	2,445	45.5	2,500	46.7	2,560	47.9	2,615	57,300	105%
Hodgdon H4198	36.2	2,385	37.2	2,440	38.2	2,490	39.2	2,545	40.2	2,595	58,700	102%
Accurate 2015	39.9	2,370	41.0	2,425	42.1	2,480	43.2	2,535	44.3	2,590	58,500	102%
Hodgdon H322	39.6	2,370	40.7	2,425	41.8	2,480	42.9	2,535	44.0	2,590	58,700	104%
Accurate LT-30	37.8	2,345	38.8	2,395	39.9	2,450	41.0	2,505	42.0	2,555	58,600	94%
Accurate LT-32	38.6	2,325	39.7	2,380	40.8	2,440	41.8	2,490	42.9	2,545	55,300	105%
IMR 4198	35.3	2,340	36.3	2,390	37.3	2,440	38.2	2,490	39.2	2,540	58,400	105%
Vihtavuori N120	33.8	2,340	34.7	2,385	35.6	2,435	36.6	2,490	37.5	2,535	58,500	97%

225 gr Bullet · 25" barrel

COAL: 2.770" • Bullet length: 1.158" • Seat depth: 0.402" • Usable capacity: 47.1 / 57.3 gr H_2O

Powder	STEP 1 · 90%		STEP 2		STEP 3		STEP 4		STEP 5 · LIMIT			
	gr	fps	gr	fps	gr	fps	gr	fps	gr	fps	psi	Fill
Hodgdon Leverevolution	45.6	2,320	46.9	2,375	48.2	2,435	49.4	2,485	50.7	2,545	58,500	103%
Vihtavuori N530	41.4	2,275	42.5	2,325	43.7	2,380	44.9	2,430	46.0	2,480	56,500	105%
Norma R123	32.5	2,285	33.4	2,330	34.3	2,380	35.2	2,425	36.1	2,475	58,500	83%
Hodgdon CFE BLK	39.1	2,270	40.2	2,320	41.3	2,375	42.3	2,420	43.4	2,470	58,700	95%
Hodgdon H4895	42.9	2,220	44.1	2,275	45.3	2,330	46.5	2,380	47.7	2,435	57,000	105%
Alliant AR-Comp	41.5	2,230	42.6	2,275	43.8	2,330	45.0	2,380	46.1	2,430	56,100	105%
Reload Swiss RS40	40.4	2,230	41.5	2,275	42.6	2,325	43.8	2,380	44.9	2,430	58,600	101%
Alliant Power Pro 1200-R	38.8	2,220	39.9	2,270	41.0	2,320	42.0	2,370	43.1	2,420	58,700	93%
Hodgdon H335	42.5	2,205	43.7	2,260	44.9	2,310	46.0	2,360	47.2	2,415	58,600	99%
Accurate 2460	42.1	2,205	43.3	2,255	44.5	2,305	45.6	2,355	46.8	2,405	58,500	100%
Accurate 2495	43.3	2,190	44.5	2,245	45.7	2,300	46.9	2,350	48.1	2,405	58,700	103%
Shooters World AR Plus	39.7	2,205	40.8	2,250	41.9	2,300	43.0	2,350	44.1	2,400	58,600	95%
IMR 3031	40.6	2,190	41.7	2,240	42.9	2,295	44.0	2,345	45.1	2,395	58,600	102%
Ramshot TAC	41.8	2,195	42.9	2,240	44.1	2,295	45.3	2,345	46.4	2,395	55,500	105%
IMR 4320	43.6	2,175	44.8	2,230	46.0	2,285	47.2	2,335	48.4	2,390	58,600	103%
Hodgdon Benchmark	40.3	2,185	41.4	2,230	42.5	2,280	43.7	2,335	44.8	2,385	56,600	105%
Accurate 2230	40.8	2,175	41.9	2,220	43.0	2,270	44.2	2,320	45.3	2,370	58,500	97%
Shooters World The Patriot	40.9	2,175	42.0	2,220	43.1	2,270	44.3	2,325	45.4	2,370	58,500	100%
Accurate 2015	39.1	2,155	40.2	2,205	41.3	2,255	42.3	2,300	43.4	2,350	58,700	96%
Alliant Reloder 7	36.0	2,140	37.0	2,185	38.0	2,235	39.0	2,280	40.0	2,325	58,700	90%

250 gr Bullet · 25" barrel

COAL: 2.745" • Bullet length: 1.232" • Seat depth: 0.502" • Usable capacity: 44.5 / 57.3 gr H_2O

Powder	STEP 1 · 90%		STEP 2		STEP 3		STEP 4		STEP 5 · LIMIT			
	gr	fps	gr	fps	gr	fps	gr	fps	gr	fps	psi	Fill
Hodgdon Leverevolution	42.9	2,165	44.1	2,220	45.3	2,270	46.5	2,325	47.7	2,375	58,400	102%
Vihtavuori N530	39.2	2,140	40.3	2,190	41.4	2,240	42.4	2,285	43.5	2,330	58,400	105%
Norma R123	30.3	2,110	31.2	2,155	32.0	2,200	32.9	2,245	33.7	2,290	58,700	82%
Hodgdon CFE BLK	36.6	2,100	37.6	2,145	38.7	2,195	39.7	2,240	40.7	2,285	58,600	94%
Hodgdon H4895	40.6	2,085	41.7	2,135	42.9	2,185	44.0	2,235	45.1	2,285	58,000	105%
Alliant AR-Comp	39.2	2,080	40.3	2,130	41.4	2,175	42.5	2,225	43.6	2,275	57,900	105%
Reload Swiss RS40	38.0	2,075	39.0	2,120	40.1	2,165	41.2	2,215	42.2	2,260	58,600	101%
Ramshot TAC	39.5	2,050	40.6	2,100	41.7	2,145	42.8	2,195	43.9	2,245	56,300	105%
Shooters World Match Rifle	40.9	2,045	42.0	2,095	43.1	2,145	44.3	2,195	45.4	2,245	55,600	105%
Hodgdon Benchmark	38.2	2,050	39.3	2,100	40.3	2,145	41.4	2,190	42.4	2,235	58,500	105%
IMR 3031	38.1	2,040	39.1	2,085	40.2	2,135	41.3	2,185	42.3	2,230	58,600	101%
Accurate 2460	39.3	2,040	40.4	2,085	41.5	2,135	42.6	2,180	43.7	2,225	58,500	98%
IMR 8208 XBR	38.7	2,035	39.8	2,080	40.9	2,130	41.9	2,175	43.0	2,220	55,900	105%
Vihtavuori N130	35.3	2,040	36.3	2,090	37.3	2,135	38.2	2,175	39.2	2,220	58,400	101%
Alliant Power Pro Varmint	39.8	2,025	40.9	2,070	42.0	2,120	43.1	2,170	44.2	2,215	55,300	105%
Shooters World The Patriot	38.3	2,015	39.3	2,060	40.4	2,105	41.5	2,155	42.5	2,200	58,500	99%
Accurate 2230	38.0	2,005	39.0	2,050	40.1	2,095	41.2	2,145	42.2	2,185	58,500	96%
Ramshot X-Terminator	37.4	1,990	38.4	2,035	39.5	2,080	40.5	2,125	41.5	2,170	58,400	94%
Alliant Reloder 7	33.6	1,975	34.5	2,020	35.5	2,065	36.4	2,105	37.3	2,150	58,600	89%
Hodgdon H4198	32.5	1,955	33.4	2,000	34.3	2,040	35.2	2,085	36.1	2,125	58,400	93%

.375 Holland & Holland Magnum

London gunmaker Holland & Holland introduced the .375 Holland & Holland Magnum in 1912. Its original cordite loadings fired a 235-grain bullet at about 2,800 fps, a 270-grain bullet at about 2,650 fps and a 300-grain bullet at about 2,500 fps. The case uses a belt ahead of the extractor groove. The belt ensures correct headspace on the gently tapered body. The design combines features of rimmed and rimless cases.

The .375 H&H became widely used for large and dangerous game. In many places it or its caliber is the legal minimum for hunting dangerous game. Most of these places are in Africa. Professional hunters and guides have long favored it as an all-round cartridge. It is also used for defense against bears in Alaska and other northern regions. Its belted case became the parent of many later magnum cartridges. These include the .300 Winchester Magnum, .338 Winchester Magnum, 7mm Remington Magnum and several Weatherby cartridges. Ammunition and rifles remain widely available.

Cartridge specifications	
Bullet Diameter	**0.375" (9.53 mm)**
Max Case Length	**2.850" (72.39 mm)**
Case Trim Length	**2.840" (72.14 mm)**
Max COAL	**3.600" (91.44 mm)**
Primer Pocket	**Large Rifle**
Standard Twist	**1:12"**
Case Capacity	**93.8 gr H_2O**
Max Pressure	**62,000 psi (SAAMI)**

220 gr Bullet · 25" barrel

COAL: 3.340" • Bullet length: 1.011" • Seat depth: 0.521" • Usable capacity: 79.3 / 93.8 gr H_2O

Powder	STEP 1 · 90%		STEP 2		STEP 3		STEP 4		STEP 5 · LIMIT			
	gr	fps	gr	fps	gr	fps	gr	fps	gr	fps	psi	Fill
Hodgdon Leverevolution	68.2	2,795	70.1	2,860	72.0	2,920	73.9	2,985	75.8	3,045	61,900	91%
Reload Swiss RS52	69.7	2,750	71.6	2,810	73.6	2,880	75.5	2,940	77.4	3,005	61,800	103%
Alliant Reloder 15	69.8	2,750	71.8	2,815	73.7	2,875	75.6	2,935	77.6	3,000	61,900	104%
Hodgdon BL-C(2)	69.9	2,740	71.9	2,805	73.8	2,870	75.8	2,935	77.7	3,000	61,800	98%
Hodgdon CFE 223	71.1	2,745	73.1	2,810	75.0	2,870	77.0	2,935	79.0	3,000	61,900	101%
Ramshot Big Game	73.5	2,735	75.5	2,800	77.6	2,865	79.7	2,935	81.7	3,000	61,100	105%
Winchester 748	71.2	2,740	73.2	2,805	75.2	2,870	77.1	2,930	79.1	3,000	61,900	103%
Vihtavuori N140	68.5	2,740	70.4	2,800	72.3	2,865	74.2	2,925	76.1	2,990	61,900	98%
Vihtavuori N540	68.6	2,750	70.5	2,810	72.4	2,870	74.3	2,930	76.2	2,990	61,800	102%
IMR 4895	67.1	2,725	68.9	2,785	70.8	2,850	72.7	2,910	74.5	2,970	61,800	97%
Accurate 2700	72.5	2,695	74.5	2,760	76.5	2,825	78.5	2,890	80.5	2,955	61,900	103%
Alliant Power Pro 2000-MR	71.3	2,695	73.3	2,760	75.3	2,825	77.2	2,890	79.2	2,955	59,700	105%
Hodgdon Varget	67.1	2,705	69.0	2,765	70.8	2,825	72.7	2,890	74.6	2,950	61,900	98%
Hodgdon H4895	65.5	2,705	67.3	2,765	69.2	2,825	71.0	2,885	72.8	2,945	61,900	95%
Accurate 2520	65.6	2,705	67.4	2,765	69.3	2,825	71.1	2,880	72.9	2,940	61,800	95%
Hodgdon H414	73.3	2,680	75.3	2,740	77.3	2,805	79.4	2,875	81.4	2,940	61,900	105%
Vihtavuori N530	60.6	2,695	62.3	2,750	64.0	2,810	65.6	2,865	67.3	2,920	62,000	91%
IMR 8208 XBR	63.5	2,670	65.3	2,730	67.0	2,785	68.8	2,845	70.5	2,900	61,800	96%
Winchester 760	72.8	2,640	74.8	2,700	76.8	2,765	78.9	2,835	80.9	2,895	59,500	105%
IMR 4064	66.1	2,655	67.9	2,715	69.8	2,775	71.6	2,835	73.4	2,890	62,000	99%

235 gr Bullet · 25" barrel

COAL: 3.570" • Bullet length: 1.152" • Seat depth: 0.432" • Usable capacity: 81.8 / 93.8 gr H_2O

Powder	STEP 1 · 90%		STEP 2		STEP 3		STEP 4		STEP 5 · LIMIT			
	gr	fps	gr	fps	gr	fps	gr	fps	gr	fps	psi	Fill
Winchester StaBALL 6.5	76.6	2,715	78.7	2,775	80.8	2,840	83.0	2,910	85.1	2,975	61,900	105%
Hodgdon Leverevolution	68.0	2,710	69.9	2,770	71.8	2,830	73.7	2,890	75.6	2,955	61,800	88%
Vihtavuori N550	73.5	2,705	75.5	2,760	77.6	2,825	79.7	2,890	81.7	2,950	60,600	105%
Ramshot Big Game	74.2	2,695	76.3	2,755	78.3	2,820	80.4	2,885	82.4	2,945	62,000	103%
Reload Swiss RS52	69.9	2,685	71.9	2,750	73.8	2,810	75.8	2,875	77.7	2,935	61,900	100%
Hodgdon BL-C(2)	70.3	2,685	72.3	2,745	74.2	2,805	76.1	2,865	78.1	2,930	61,900	96%
Winchester 748	71.5	2,680	73.5	2,745	75.5	2,805	77.4	2,865	79.4	2,930	61,900	100%
Hodgdon CFE 223	71.2	2,675	73.2	2,740	75.2	2,800	77.1	2,860	79.1	2,920	61,800	99%
Alliant Reloder 15	69.4	2,670	71.3	2,730	73.3	2,790	75.2	2,850	77.1	2,910	61,900	101%
Hodgdon SUPERFORMANCE	78.9	2,615	81.1	2,685	83.3	2,750	85.5	2,820	87.7	2,890	58,900	105%
Vihtavuori N140	68.1	2,655	70.0	2,715	71.9	2,775	73.8	2,835	75.7	2,890	61,900	94%
Winchester 760	74.3	2,630	76.3	2,690	78.4	2,755	80.5	2,820	82.5	2,880	61,800	104%
Hodgdon Varget	67.1	2,635	69.0	2,695	70.8	2,755	72.7	2,815	74.6	2,875	61,800	95%
IMR 4895	66.6	2,640	68.4	2,700	70.3	2,760	72.2	2,820	74.0	2,875	61,900	94%
Winchester StaBALL Match	68.0	2,635	69.9	2,695	71.8	2,750	73.6	2,810	75.5	2,870	62,000	104%
Hodgdon H4895	65.3	2,625	67.1	2,680	68.9	2,740	70.8	2,800	72.6	2,855	61,900	92%
Accurate 2520	64.9	2,605	66.7	2,660	68.5	2,715	70.3	2,770	72.1	2,825	61,900	91%
Alliant Power Pro Varmint	65.2	2,595	67.0	2,650	68.8	2,710	70.6	2,765	72.4	2,820	62,000	94%
IMR 4451	74.0	2,565	76.0	2,625	78.1	2,690	80.2	2,755	82.2	2,820	61,900	105%
IMR 4064	65.8	2,585	67.6	2,640	69.4	2,695	71.3	2,755	73.1	2,810	62,000	96%

250 gr Bullet · 25" barrel

COAL: 3.583" • Bullet length: 1.394" • Seat depth: 0.661" • Usable capacity: 75.4 / 93.8 gr H_2O

Powder	STEP 1 · 90%		STEP 2		STEP 3		STEP 4		STEP 5 · LIMIT			
	gr	fps	gr	fps	gr	fps	gr	fps	gr	fps	psi	Fill
Hodgdon Leverevolution	63.9	2,580	65.7	2,640	67.5	2,700	69.2	2,755	71.0	2,815	61,900	90%
Ramshot Big Game	69.5	2,560	71.4	2,620	73.3	2,680	75.3	2,740	77.2	2,805	61,800	104%
Reload Swiss RS52	65.5	2,555	67.3	2,610	69.2	2,675	71.0	2,735	72.8	2,790	61,900	101%
Winchester 748	67.0	2,550	68.8	2,610	70.7	2,670	72.6	2,730	74.4	2,790	62,000	101%
Hodgdon BL-C(2)	65.9	2,550	67.7	2,610	69.6	2,670	71.4	2,730	73.2	2,785	61,900	97%
Winchester StaBALL 6.5	70.6	2,540	72.5	2,600	74.5	2,665	76.5	2,725	78.4	2,785	58,900	105%
Hodgdon CFE 223	66.7	2,545	68.5	2,600	70.4	2,660	72.3	2,720	74.1	2,780	61,800	100%
Alliant Power Pro 2000-MR	67.8	2,535	69.7	2,595	71.5	2,650	73.4	2,715	75.3	2,775	61,500	105%
Alliant Reloder 15	65.1	2,545	66.9	2,600	68.7	2,655	70.5	2,715	72.3	2,770	62,000	102%
Vihtavuori N140	63.8	2,525	65.6	2,580	67.3	2,635	69.1	2,695	70.9	2,750	61,800	96%
Vihtavuori N540	63.7	2,525	65.5	2,580	67.3	2,635	69.0	2,690	70.8	2,745	61,900	100%
Alliant TS 15.5	63.3	2,510	65.0	2,570	66.8	2,625	68.5	2,685	70.3	2,740	61,900	101%
Hodgdon Varget	62.8	2,505	64.5	2,560	66.3	2,620	68.0	2,675	69.8	2,735	61,800	96%
Winchester 760	69.2	2,485	71.1	2,545	73.1	2,610	75.0	2,670	76.9	2,730	61,100	105%
Winchester StaBALL Match	63.5	2,495	65.3	2,550	67.0	2,605	68.8	2,665	70.5	2,720	61,300	105%
IMR 4320	62.6	2,490	64.3	2,545	66.0	2,600	67.8	2,660	69.5	2,715	62,000	93%
Accurate 2520	61.0	2,480	62.7	2,530	64.4	2,585	66.1	2,640	67.8	2,695	61,800	93%
Alliant Power Pro Varmint	61.0	2,460	62.7	2,515	64.4	2,570	66.1	2,625	67.8	2,680	61,900	95%
Vihtavuori N135	60.2	2,470	61.9	2,520	63.6	2,575	65.2	2,625	66.9	2,680	62,000	96%
Norma 202	60.3	2,460	62.0	2,510	63.6	2,560	65.3	2,615	67.0	2,670	61,800	96%

270 gr Bullet · 25" barrel

COAL: 3.550" • Bullet length: 1.255" • Seat depth: 0.555" • Usable capacity: 78.3 / 93.8 gr H_2O

Powder	STEP 1 · 90%		STEP 2		STEP 3		STEP 4		STEP 5 · LIMIT			
	gr	fps	gr	fps	gr	fps	gr	fps	gr	fps	psi	Fill
Winchester StaBALL 6.5	72.2	2,520	74.2	2,580	76.2	2,640	78.2	2,700	80.2	2,760	61,900	103%
Hodgdon SUPERFORMANCE	75.6	2,490	77.7	2,555	79.8	2,615	81.9	2,680	84.0	2,745	61,000	105%
Ramshot Big Game	69.8	2,500	71.7	2,555	73.7	2,615	75.6	2,670	77.5	2,730	61,900	101%
Hodgdon H4350	73.4	2,475	75.4	2,535	77.5	2,600	79.5	2,660	81.5	2,720	61,200	105%
Reload Swiss RS52	65.9	2,495	67.7	2,550	69.6	2,605	71.4	2,665	73.2	2,720	62,000	98%
Vihtavuori N550	68.8	2,500	70.7	2,555	72.6	2,610	74.5	2,665	76.4	2,720	61,900	102%
Winchester 748	67.3	2,490	69.2	2,545	71.0	2,600	72.9	2,660	74.8	2,720	62,000	98%
Alliant Power Pro 2000-MR	68.2	2,480	70.1	2,535	72.0	2,590	73.9	2,650	75.8	2,710	61,900	102%
Accurate 2700	68.7	2,455	70.6	2,515	72.5	2,570	74.4	2,630	76.3	2,690	61,800	99%
Hodgdon H414	69.5	2,455	71.4	2,510	73.3	2,570	75.3	2,630	77.2	2,690	61,900	100%
Winchester 760	70.0	2,450	72.0	2,510	73.9	2,565	75.8	2,625	77.8	2,685	61,800	102%
Alliant Reloder 15	64.6	2,455	66.4	2,510	68.2	2,565	70.0	2,620	71.8	2,675	61,900	98%
Norma 204	70.4	2,430	72.4	2,490	74.3	2,545	76.3	2,605	78.2	2,665	59,100	105%
Vihtavuori N150	65.0	2,450	66.8	2,505	68.6	2,555	70.4	2,610	72.2	2,665	61,900	103%
Vihtavuori N140	63.5	2,440	65.3	2,495	67.0	2,545	68.8	2,600	70.6	2,655	62,000	92%
IMR 4451	69.8	2,400	71.8	2,465	73.7	2,520	75.6	2,580	77.6	2,640	61,900	103%
Vihtavuori N540	63.0	2,425	64.8	2,480	66.5	2,530	68.3	2,585	70.0	2,635	61,900	95%
Reload Swiss RS50	64.4	2,410	66.2	2,465	68.0	2,520	69.7	2,570	71.5	2,625	61,800	96%
IMR 4007 SSC	69.0	2,385	70.9	2,445	72.8	2,500	74.8	2,560	76.7	2,620	59,700	105%
IMR 4064	61.3	2,380	63.0	2,430	64.7	2,480	66.4	2,535	68.1	2,585	62,000	93%

300 gr Bullet · 25" barrel

COAL: 3.560" • Bullet length: 1.373" • Seat depth: 0.663" • Usable capacity: 76.1 / 93.8 gr H_2O

Powder	STEP 1 · 90%		STEP 2		STEP 3		STEP 4		STEP 5 · LIMIT			
	gr	fps	gr	fps	gr	fps	gr	fps	gr	fps	psi	Fill
Hodgdon SUPERFORMANCE	72.9	2,375	74.9	2,435	77.0	2,495	79.0	2,555	81.0	2,615	61,900	104%
Winchester StaBALL 6.5	69.0	2,370	70.9	2,425	72.8	2,480	74.8	2,535	76.7	2,595	61,900	102%
Hodgdon H4350	70.2	2,350	72.2	2,410	74.1	2,465	76.0	2,520	78.0	2,580	62,000	103%
Reload Swiss RS60	68.1	2,335	70.0	2,395	71.9	2,450	73.8	2,510	75.7	2,570	61,900	102%
Ramshot Big Game	66.6	2,345	68.4	2,395	70.3	2,450	72.2	2,505	74.0	2,560	62,000	99%
Winchester 748	64.3	2,340	66.1	2,390	67.8	2,440	69.6	2,495	71.4	2,550	62,000	96%
Norma 204	68.4	2,320	70.3	2,380	72.2	2,435	74.1	2,490	76.0	2,545	61,400	105%
Hodgdon H414	66.4	2,310	68.3	2,370	70.1	2,420	72.0	2,475	73.8	2,530	61,900	99%
Winchester 760	67.0	2,310	68.8	2,365	70.7	2,420	72.6	2,475	74.4	2,530	61,800	100%
Accurate 2700	65.7	2,310	67.5	2,365	69.3	2,415	71.2	2,475	73.0	2,525	61,900	98%
Hodgdon CFE 223	63.6	2,305	65.4	2,360	67.2	2,415	68.9	2,465	70.7	2,515	61,900	95%
IMR 4007 SSC	67.1	2,290	68.9	2,340	70.8	2,395	72.7	2,455	74.5	2,510	62,000	105%
IMR 4451	66.9	2,275	68.8	2,330	70.6	2,385	72.5	2,440	74.3	2,495	61,800	101%
Alliant Reloder 15	61.1	2,290	62.8	2,340	64.5	2,390	66.2	2,440	67.9	2,490	62,000	95%
Vihtavuori N150	61.5	2,280	63.2	2,330	64.9	2,380	66.6	2,435	68.3	2,485	61,900	101%
Hodgdon Varget	59.7	2,270	61.4	2,325	63.0	2,370	64.7	2,425	66.3	2,475	61,800	91%
Vihtavuori N140	60.1	2,265	61.8	2,320	63.5	2,370	65.1	2,415	66.8	2,465	61,900	89%
Reload Swiss RS50	61.4	2,250	63.1	2,300	64.8	2,350	66.5	2,400	68.2	2,450	62,000	94%
Hodgdon H4895	57.7	2,240	59.3	2,290	60.9	2,335	62.5	2,385	64.1	2,435	61,800	87%
IMR 4064	58.0	2,215	59.6	2,265	61.2	2,310	62.8	2,360	64.4	2,405	61,900	90%

.375 Remington Ultra Magnum

Remington introduced the .375 Remington Ultra Magnum in 2000 as part of its Ultra Magnum line. It is formed by necking up the .300 Remington Ultra Magnum case to accept .375-inch bullets. That parent case is beltless with a rebated rim and descends from the .404 Jeffery. The cartridge requires a magnum-length action. It was intended to give the .375 bore higher velocities than the .375 H&H Magnum. Remington chambered it in its Model 700 rifles. Savage also offered rifles for it.

Remington's factory load drives a 300-grain bullet at about 2,760 fps. Handloads with lighter bullets reach higher velocities. The cartridge is intended for large and dangerous game. This is particularly true where longer shots may be required. No production rifles are currently cataloged in the chambering. Factory ammunition comes from only a few makers including Remington and Nosler. Components remain readily available. As a result the .375 Remington Ultra Magnum is now supported mainly by handloaders and owners of existing rifles.

Cartridge specifications	
Bullet Diameter	**0.375" (9.53 mm)**
Max Case Length	**2.850" (72.39 mm)**
Case Trim Length	**2.840" (72.14 mm)**
Max COAL	**3.600" (91.44 mm)**
Primer Pocket	**Large Rifle**
Standard Twist	**1:12"**
Case Capacity	**117.4 gr H_2O**
Max Pressure	**65,000 psi (SAAMI)**

235 gr Bullet · 25" barrel

COAL: 3.550" • Bullet length: 1.152" • Seat depth: 0.452" • Usable capacity: 104.8 / 117.4 gr H_2O

Powder	STEP 1 · 90%		STEP 2		STEP 3		STEP 4		STEP 5 · LIMIT			
	gr	fps	gr	fps	gr	fps	gr	fps	gr	fps	psi	Fill
Accurate 4350	94.0	3,010	96.6	3,085	99.2	3,155	101.8	3,230	104.4	3,305	65,000	104%
Hodgdon SUPERFORMANCE	95.8	2,995	98.5	3,070	101.1	3,145	103.8	3,220	106.4	3,295	64,900	99%
IMR 4350	92.3	2,965	94.8	3,035	97.4	3,105	100.0	3,180	102.5	3,250	64,800	105%
Winchester StaBALL 6.5	90.2	2,975	92.7	3,045	95.2	3,110	97.7	3,180	100.2	3,250	64,900	96%
Reload Swiss RS60	89.9	2,950	92.4	3,020	94.9	3,095	97.4	3,165	99.9	3,240	64,900	98%
Reload Swiss RS62	94.5	2,940	97.1	3,015	99.8	3,090	102.4	3,165	105.0	3,240	64,900	104%
Reload Swiss RS70	96.7	2,930	99.4	3,005	102.1	3,080	104.7	3,155	107.4	3,230	64,900	103%
Alliant Reloder 16	89.2	2,955	91.7	3,020	94.2	3,090	96.6	3,155	99.1	3,220	65,000	105%
Ramshot Hunter	93.2	2,930	95.8	3,000	98.4	3,070	101.0	3,145	103.6	3,215	63,700	105%
Hodgdon H414	88.1	2,930	90.5	2,995	93.0	3,065	95.5	3,135	97.9	3,200	64,900	95%
Ramshot Big Game	86.9	2,935	89.3	3,000	91.8	3,070	94.2	3,135	96.6	3,200	64,900	94%
Winchester 760	88.7	2,920	91.2	2,990	93.6	3,055	96.0	3,125	98.5	3,195	65,000	97%
Accurate 2700	86.7	2,920	89.1	2,985	91.5	3,050	93.9	3,120	96.3	3,185	64,800	94%
Winchester Supreme 780	98.4	2,875	101.1	2,945	103.8	3,020	106.6	3,100	109.3	3,175	63,500	105%
Hodgdon CFE 223	83.7	2,910	86.0	2,975	88.3	3,035	90.7	3,105	93.0	3,165	64,900	90%
Hodgdon H4350	90.2	2,875	92.7	2,945	95.2	3,015	97.7	3,085	100.2	3,155	64,800	96%
Vihtavuori N550	84.3	2,905	86.7	2,965	89.0	3,030	91.3	3,090	93.7	3,155	64,900	94%
Alliant Reloder 15	80.9	2,895	83.2	2,960	85.4	3,020	87.7	3,080	89.9	3,140	65,000	92%
IMR 7828	98.4	2,820	101.1	2,895	103.8	2,970	106.6	3,045	109.3	3,120	62,800	105%
Winchester StaBALL Match	80.0	2,865	82.2	2,925	84.5	2,990	86.7	3,050	88.9	3,110	64,900	95%

260 gr Bullet · 25" barrel

COAL: 3.565" • Bullet length: 1.310" • Seat depth: 0.595" • Usable capacity: 100.8 / 117.4 gr H_2O

Powder	STEP 1 · 90%		STEP 2		STEP 3		STEP 4		STEP 5 · LIMIT			
	gr	fps	gr	fps	gr	fps	gr	fps	gr	fps	psi	Fill
Accurate 4350	89.6	2,860	92.1	2,930	94.6	2,995	97.1	3,065	99.6	3,135	65,000	103%
Hodgdon SUPERFORMANCE	91.4	2,850	94.0	2,920	96.5	2,990	99.0	3,060	101.6	3,130	64,900	99%
Vihtavuori N555	88.7	2,835	91.2	2,900	93.7	2,970	96.1	3,035	98.6	3,105	63,400	105%
Reload Swiss RS62	90.4	2,810	92.9	2,880	95.4	2,950	97.9	3,020	100.4	3,090	64,900	104%
IMR 4350	87.8	2,815	90.2	2,880	92.7	2,950	95.1	3,015	97.5	3,080	65,000	104%
Reload Swiss RS60	85.9	2,810	88.3	2,880	90.7	2,945	93.0	3,010	95.4	3,080	64,900	97%
Reload Swiss RS70	92.3	2,795	94.9	2,865	97.4	2,935	100.0	3,005	102.6	3,080	64,900	103%
Ramshot Hunter	89.6	2,800	92.1	2,870	94.6	2,935	97.1	3,005	99.6	3,075	64,900	105%
Winchester Supreme 780	94.6	2,770	97.2	2,840	99.8	2,910	102.5	2,980	105.1	3,055	64,700	105%
Alliant Power Pro 4000-MR	89.5	2,775	92.0	2,845	94.5	2,910	96.9	2,975	99.4	3,045	64,900	100%
Hodgdon H4831SC	93.7	2,765	96.3	2,835	98.9	2,905	101.5	2,975	104.1	3,045	65,000	104%
Alliant Reloder 16	84.5	2,785	86.8	2,850	89.2	2,910	91.6	2,975	93.9	3,040	64,900	103%
Alliant Reloder 17	85.2	2,770	87.6	2,840	90.0	2,905	92.3	2,970	94.7	3,040	64,900	94%
Ramshot Big Game	82.7	2,775	85.0	2,835	87.3	2,895	89.6	2,960	91.9	3,020	65,000	93%
Alliant Power Pro 2000-MR	81.5	2,770	83.8	2,830	86.0	2,890	88.3	2,955	90.5	3,015	65,000	94%
IMR 7828	94.6	2,730	97.2	2,800	99.8	2,865	102.5	2,940	105.1	3,010	64,600	105%
Hodgdon H4350	85.7	2,735	88.1	2,800	90.5	2,865	92.8	2,930	95.2	2,995	64,900	95%
Vihtavuori N160	87.8	2,740	90.2	2,800	92.7	2,870	95.1	2,930	97.5	2,995	62,800	105%
IMR 4451	84.7	2,735	87.0	2,795	89.4	2,860	91.8	2,930	94.1	2,990	64,800	97%
Shooters World SW4350	85.8	2,710	88.2	2,775	90.5	2,835	92.9	2,900	95.3	2,965	65,000	103%

285 gr Bullet · 25" barrel

COAL: 3.570" • Bullet length: 1.217" • Seat depth: 0.496" • Usable capacity: 103.6 / 117.4 gr H_2O

Powder	STEP 1 · 90%		STEP 2		STEP 3		STEP 4		STEP 5 · LIMIT			
	gr	fps	gr	fps	gr	fps	gr	fps	gr	fps	psi	Fill
Alliant Reloder 26	97.4	2,755	100.1	2,825	102.8	2,895	105.5	2,965	108.2	3,040	62,600	105%
Hodgdon SUPERFORMANCE	90.9	2,760	93.4	2,825	96.0	2,890	98.5	2,955	101.0	3,025	64,900	95%
Accurate 4350	88.9	2,760	91.4	2,825	93.8	2,885	96.3	2,950	98.8	3,020	64,900	100%
Alliant Reloder 19	92.1	2,730	94.6	2,795	97.2	2,865	99.8	2,935	102.3	3,000	64,400	105%
IMR 4831	90.2	2,725	92.7	2,795	95.2	2,860	97.7	2,925	100.2	2,995	64,900	104%
Norma URP	87.4	2,735	89.8	2,800	92.3	2,865	94.7	2,930	97.1	2,995	64,900	103%
Reload Swiss RS62	90.1	2,730	92.6	2,795	95.1	2,860	97.6	2,930	100.1	2,995	64,800	101%
Hodgdon Hybrid 100V	85.9	2,725	88.3	2,785	90.7	2,850	93.0	2,915	95.4	2,980	65,000	103%
Reload Swiss RS60	85.5	2,725	87.9	2,785	90.3	2,850	92.6	2,910	95.0	2,975	65,000	94%
Hodgdon H4831SC	93.5	2,695	96.1	2,760	98.7	2,825	101.3	2,895	103.9	2,960	65,000	101%
IMR 4350	86.7	2,710	89.1	2,770	91.5	2,830	93.9	2,895	96.3	2,955	64,900	100%
Alliant Reloder 17	85.1	2,690	87.4	2,750	89.8	2,815	92.2	2,880	94.5	2,940	65,000	92%
IMR 7828	94.0	2,665	96.6	2,730	99.2	2,795	101.8	2,860	104.4	2,930	65,000	101%
Winchester StaBALL 6.5	84.7	2,690	87.0	2,745	89.4	2,805	91.8	2,870	94.1	2,925	64,900	92%
Alliant Reloder 22	90.8	2,650	93.3	2,710	95.8	2,775	98.4	2,845	100.9	2,910	64,800	103%
Vihtavuori N160	87.8	2,660	90.2	2,720	92.7	2,785	95.1	2,845	97.5	2,905	64,800	102%
IMR 4451	84.3	2,645	86.7	2,705	89.0	2,765	91.3	2,825	93.7	2,890	64,900	94%
Accurate 3100	90.2	2,625	92.7	2,690	95.2	2,755	97.7	2,820	100.2	2,885	62,800	105%
Hodgdon H4350	84.6	2,640	86.9	2,700	89.3	2,760	91.7	2,820	94.0	2,880	64,900	92%
Hodgdon H4831	91.2	2,620	93.7	2,685	96.3	2,750	98.8	2,815	101.3	2,880	62,300	105%

300 gr Bullet · 25" barrel

COAL: 3.560" • Bullet length: 1.332" • Seat depth: 0.622" • Usable capacity: 100.9 / 117.4 gr H_2O

Powder	STEP 1 · 90%		STEP 2		STEP 3		STEP 4		STEP 5 · LIMIT			
	gr	fps	gr	fps	gr	fps	gr	fps	gr	fps	psi	Fill
Alliant Reloder 26	94.9	2,685	97.5	2,750	100.2	2,820	102.8	2,890	105.4	2,960	63,100	105%
Hodgdon SUPERFORMANCE	88.2	2,670	90.7	2,735	93.1	2,800	95.5	2,860	98.0	2,925	64,800	95%
Accurate 4350	86.2	2,670	88.6	2,730	91.0	2,790	93.4	2,855	95.8	2,920	64,800	99%
Alliant Reloder 19	89.6	2,655	92.1	2,720	94.6	2,785	97.1	2,850	99.6	2,920	64,900	105%
IMR 4831	87.7	2,645	90.1	2,710	92.6	2,775	95.0	2,840	97.4	2,905	65,000	104%
Norma URP	84.7	2,650	87.0	2,710	89.4	2,775	91.8	2,840	94.1	2,905	64,900	102%
Reload Swiss RS62	87.6	2,650	90.0	2,715	92.4	2,775	94.9	2,840	97.3	2,905	65,000	100%
Winchester Supreme 780	91.5	2,625	94.0	2,685	96.6	2,750	99.2	2,820	101.7	2,885	64,900	101%
Reload Swiss RS60	83.0	2,635	85.3	2,695	87.6	2,760	89.9	2,820	92.2	2,880	65,000	94%
IMR 4350	83.9	2,615	86.2	2,675	88.6	2,735	90.9	2,795	93.2	2,855	64,900	99%
IMR 7828SSC	91.6	2,585	94.1	2,645	96.7	2,710	99.3	2,780	101.8	2,845	62,100	105%
IMR 7828	91.0	2,580	93.5	2,645	96.0	2,705	98.6	2,775	101.1	2,840	64,800	101%
Alliant Reloder 22	88.1	2,570	90.5	2,630	93.0	2,695	95.5	2,755	97.9	2,820	64,800	103%
Winchester StaBALL 6.5	82.0	2,590	84.3	2,650	86.5	2,705	88.8	2,765	91.1	2,820	64,900	91%
Accurate 3100	87.8	2,555	90.3	2,620	92.7	2,680	95.1	2,745	97.6	2,810	63,400	105%
Hodgdon H414	80.6	2,575	82.8	2,635	85.0	2,690	87.3	2,750	89.5	2,810	64,900	90%
IMR 4007 SSC	81.6	2,565	83.9	2,625	86.2	2,685	88.4	2,745	90.7	2,805	64,900	96%
Hodgdon H4831	88.7	2,550	91.2	2,610	93.7	2,675	96.1	2,735	98.6	2,800	62,900	105%
Hodgdon H4350	81.8	2,550	84.1	2,610	86.3	2,665	88.6	2,725	90.9	2,785	64,900	91%
Vihtavuori N165	88.7	2,540	91.2	2,605	93.7	2,665	96.1	2,725	98.6	2,785	62,600	105%

350 gr Bullet · 25" barrel

COAL: 3.550" • Bullet length: 1.737" • Seat depth: 1.037" • Usable capacity: 92.1 / 117.4 gr H_2O

Powder	STEP 1 · 90%		STEP 2		STEP 3		STEP 4		STEP 5 · LIMIT			
	gr	fps	gr	fps	gr	fps	gr	fps	gr	fps	psi	Fill
Alliant Reloder 26	86.6	2,475	89.0	2,535	91.4	2,595	93.8	2,660	96.2	2,720	63,400	105%
Alliant Reloder 19	81.7	2,440	84.0	2,500	86.3	2,560	88.5	2,620	90.8	2,680	64,900	105%
Hodgdon SUPERFORMANCE	80.5	2,445	82.7	2,505	85.0	2,560	87.2	2,620	89.4	2,675	64,900	95%
Accurate 4350	78.4	2,435	80.6	2,490	82.8	2,550	84.9	2,600	87.1	2,660	64,900	99%
IMR 4831	79.9	2,425	82.1	2,485	84.3	2,540	86.6	2,600	88.8	2,660	64,900	104%
Norma URP	76.9	2,430	79.0	2,485	81.2	2,545	83.3	2,600	85.4	2,660	64,800	102%
Reload Swiss RS62	79.8	2,430	82.0	2,485	84.3	2,545	86.5	2,605	88.7	2,660	64,900	100%
Winchester Supreme 780	83.3	2,410	85.6	2,470	87.9	2,525	90.3	2,590	92.6	2,645	65,000	101%
Vihtavuori N560	83.2	2,420	85.5	2,475	87.8	2,530	90.1	2,585	92.4	2,640	63,400	105%
Hodgdon Hybrid 100V	76.1	2,410	78.2	2,465	80.3	2,525	82.4	2,580	84.5	2,635	64,900	103%
IMR 4955	80.7	2,405	83.0	2,460	85.2	2,520	87.5	2,580	89.7	2,635	65,000	98%
Reload Swiss RS60	75.6	2,410	77.7	2,465	79.8	2,520	81.9	2,580	84.0	2,635	65,000	94%
Hodgdon H4831SC	82.7	2,395	85.0	2,455	87.3	2,510	89.6	2,570	91.9	2,630	64,900	100%
Vihtavuori N555	76.2	2,415	78.3	2,470	80.5	2,525	82.6	2,580	84.7	2,630	64,900	99%
Ramshot Hunter	78.8	2,395	81.0	2,450	83.2	2,510	85.3	2,560	87.5	2,620	64,900	101%
Alliant Reloder 17	75.1	2,380	77.2	2,435	79.3	2,490	81.3	2,545	83.4	2,600	64,800	91%
Alliant Reloder 22	80.3	2,365	82.5	2,420	84.8	2,475	87.0	2,530	89.2	2,590	65,000	103%
Winchester StaBALL 6.5	74.3	2,345	76.4	2,400	78.4	2,450	80.5	2,500	82.6	2,555	64,800	90%
Alliant Reloder 16	72.5	2,330	74.5	2,380	76.5	2,430	78.6	2,480	80.6	2,535	64,900	97%
Hodgdon H4350	74.0	2,325	76.0	2,380	78.1	2,430	80.2	2,485	82.2	2,535	64,900	90%

.375 Ruger

Hornady and Ruger jointly developed the .375 Ruger. It was introduced in 2007 in the Ruger Hawkeye African and Hawkeye Alaskan rifles. Rather than modifying an existing cartridge the companies designed a new rimless and beltless case. The case has a base diameter of .532 inch. Its maximum overall length of 3.340 inches fits standard-length actions of the .30-06 Springfield class. SAAMI issued standards for the cartridge in June 2007. C.I.P. standardization followed.

Hornady Superformance ammunition drives a 270-grain bullet at about 2,840 fps and a 300-grain bullet at about 2,660 fps. These figures are comparable to those of the .375 H&H Magnum. The .375 Ruger can approach .375 H&H performance even from 20-inch barrels. The cartridge is used for large and dangerous game in Africa and North America. Mossberg has also chambered its Patriot bolt-action rifles for the cartridge since 2015. The .375 Ruger remains in active production.

Cartridge specifications	
Bullet Diameter	**0.375" (9.53 mm)**
Max Case Length	**2.580" (65.53 mm)**
Case Trim Length	**2.570" (65.28 mm)**
Max COAL	**3.340" (84.84 mm)**
Primer Pocket	**Large Rifle**
Standard Twist	**1:12"**
Case Capacity	**99.3 gr H_2O**
Max Pressure	**62,000 psi (SAAMI)**

235 gr Bullet · 25" barrel

COAL: 3.280" • Bullet length: 1.152" • Seat depth: 0.452" • Usable capacity: 86.7 / 99.3 gr H_2O

Powder	STEP 1 · 90%		STEP 2		STEP 3		STEP 4		STEP 5 · LIMIT			
	gr	fps	gr	fps	gr	fps	gr	fps	gr	fps	psi	Fill
Winchester StaBALL 6.5	78.8	2,810	81.0	2,875	83.2	2,940	85.4	3,010	87.6	3,075	61,900	102%
Hodgdon SUPERFORMANCE	82.9	2,770	85.2	2,840	87.5	2,915	89.8	2,985	92.1	3,055	61,900	104%
Vihtavuori N550	75.5	2,795	77.6	2,855	79.7	2,920	81.8	2,980	83.9	3,045	61,900	102%
Hodgdon Leverevolution	69.8	2,795	71.8	2,860	73.7	2,920	75.6	2,980	77.6	3,040	62,000	85%
Reload Swiss RS52	72.0	2,780	74.0	2,845	76.0	2,910	78.0	2,970	80.0	3,035	61,900	97%
Alliant Power Pro 2000-MR	74.6	2,765	76.7	2,830	78.8	2,895	80.8	2,955	82.9	3,020	61,900	100%
Ramshot Big Game	75.5	2,760	77.6	2,825	79.7	2,890	81.8	2,955	83.9	3,020	61,800	99%
Hodgdon H414	76.6	2,750	78.7	2,815	80.8	2,880	83.0	2,945	85.1	3,015	61,900	100%
Hodgdon Varget	70.3	2,765	72.3	2,830	74.2	2,890	76.1	2,950	78.1	3,010	62,000	94%
Winchester 760	76.8	2,735	78.9	2,795	81.0	2,860	83.2	2,930	85.3	2,995	61,800	101%
Vihtavuori N150	71.4	2,740	73.4	2,800	75.3	2,860	77.3	2,920	79.3	2,985	61,900	103%
Alliant Reloder 15	70.4	2,735	72.4	2,795	74.3	2,850	76.3	2,915	78.2	2,970	61,900	96%
IMR 4166	67.3	2,730	69.2	2,790	71.0	2,845	72.9	2,905	74.8	2,970	61,900	96%
Alliant Power Pro 4000-MR	80.4	2,695	82.6	2,760	84.8	2,825	87.1	2,895	89.3	2,965	61,200	105%
Vihtavuori N540	69.3	2,725	71.2	2,785	73.2	2,845	75.1	2,900	77.0	2,960	61,900	94%
Winchester 748	71.4	2,710	73.4	2,770	75.3	2,830	77.3	2,890	79.3	2,955	61,800	94%
Vihtavuori N140	69.0	2,710	70.9	2,770	72.8	2,830	74.8	2,890	76.7	2,950	61,800	90%
IMR 4955	81.2	2,630	83.5	2,700	85.7	2,770	88.0	2,840	90.2	2,910	61,800	105%
IMR 4451	75.5	2,640	77.6	2,705	79.7	2,770	81.8	2,835	83.9	2,900	62,000	101%
Shooters World Long Rifle	72.0	2,655	74.0	2,715	76.0	2,780	78.0	2,840	80.0	2,900	61,900	101%

250 gr Bullet · 25" barrel

COAL: 3.330" • Bullet length: 1.366" • Seat depth: 0.616" • Usable capacity: 82.1 / 99.3 gr H_2O

Powder	STEP 1 · 90%		STEP 2		STEP 3		STEP 4		STEP 5 · LIMIT			
	gr	fps	gr	fps	gr	fps	gr	fps	gr	fps	psi	Fill
Winchester StaBALL 6.5	75.2	2,695	77.3	2,760	79.4	2,820	81.5	2,885	83.6	2,950	62,000	103%
Hodgdon SUPERFORMANCE	79.0	2,665	81.2	2,730	83.4	2,800	85.6	2,865	87.8	2,935	61,800	105%
Vihtavuori N550	71.9	2,680	73.9	2,740	75.9	2,795	77.9	2,855	79.9	2,920	61,900	102%
Hodgdon Leverevolution	66.5	2,675	68.3	2,730	70.2	2,795	72.1	2,855	73.9	2,910	61,900	86%
Reload Swiss RS52	68.6	2,665	70.5	2,725	72.4	2,785	74.3	2,845	76.2	2,905	61,800	97%
Alliant Power Pro 2000-MR	71.1	2,650	73.1	2,710	75.0	2,770	77.0	2,830	79.0	2,895	61,900	101%
Ramshot Big Game	72.0	2,650	74.0	2,710	76.0	2,770	78.0	2,830	80.0	2,895	61,800	99%
Hodgdon Varget	66.8	2,645	68.7	2,705	70.5	2,760	72.3	2,820	74.2	2,880	61,800	94%
Hodgdon H380	71.2	2,630	73.2	2,690	75.2	2,750	77.1	2,810	79.1	2,875	61,900	102%
Winchester 760	73.2	2,625	75.2	2,685	77.3	2,750	79.3	2,810	81.3	2,875	61,900	102%
Norma 204	73.8	2,605	75.8	2,670	77.9	2,735	80.0	2,800	82.0	2,860	60,300	105%
Vihtavuori N150	68.0	2,625	69.9	2,685	71.8	2,745	73.6	2,800	75.5	2,860	62,000	103%
Hodgdon H4350	75.3	2,595	77.4	2,660	79.5	2,725	81.6	2,790	83.7	2,855	61,900	103%
Alliant Reloder 15	66.9	2,615	68.8	2,670	70.6	2,725	72.5	2,785	74.3	2,840	61,800	97%
Alliant Reloder 17	73.0	2,580	75.0	2,645	77.0	2,710	79.1	2,775	81.1	2,840	61,800	99%
IMR 4166	64.1	2,610	65.9	2,665	67.7	2,725	69.4	2,780	71.2	2,840	62,000	96%
Alliant Power Pro 4000-MR	76.1	2,570	78.2	2,635	80.3	2,695	82.5	2,765	84.6	2,830	60,100	105%
Vihtavuori N540	65.9	2,605	67.7	2,660	69.6	2,720	71.4	2,775	73.2	2,830	61,900	95%
Hodgdon CFE 223	67.7	2,585	69.6	2,640	71.5	2,700	73.3	2,755	75.2	2,815	61,800	93%
IMR 4955	77.0	2,520	79.2	2,585	81.3	2,650	83.4	2,715	85.6	2,785	61,100	105%

270 gr Bullet · 25" barrel

COAL: 3.300" • Bullet length: 1.352" • Seat depth: 0.632" • Usable capacity: 81.7 / 99.3 gr H_2O

Powder	STEP 1 · 90%		STEP 2		STEP 3		STEP 4		STEP 5 · LIMIT			
	gr	fps	gr	fps	gr	fps	gr	fps	gr	fps	psi	Fill
Hodgdon SUPERFORMANCE	77.6	2,590	79.8	2,655	81.9	2,720	84.0	2,785	86.2	2,850	61,900	103%
Winchester StaBALL 6.5	73.5	2,595	75.5	2,655	77.6	2,715	79.7	2,780	81.7	2,840	61,900	101%
Reload Swiss RS60	72.5	2,550	74.5	2,610	76.5	2,675	78.6	2,740	80.6	2,800	61,900	102%
Norma 204	73.1	2,545	75.1	2,605	77.2	2,670	79.2	2,730	81.2	2,795	61,900	104%
Reload Swiss RS52	67.1	2,565	68.9	2,620	70.8	2,680	72.7	2,740	74.5	2,795	61,800	96%
Hodgdon H414	71.5	2,550	73.5	2,610	75.5	2,670	77.4	2,730	79.4	2,790	62,000	99%
Alliant Power Pro 2000-MR	69.5	2,555	71.4	2,610	73.3	2,670	75.3	2,730	77.2	2,785	61,900	99%
Ramshot Big Game	70.4	2,550	72.4	2,610	74.3	2,670	76.3	2,730	78.2	2,785	62,000	98%
Winchester 760	71.6	2,535	73.6	2,595	75.6	2,655	77.6	2,715	79.6	2,775	61,900	100%
Hodgdon H4350	73.5	2,515	75.5	2,575	77.6	2,640	79.7	2,705	81.7	2,765	61,900	101%
Hodgdon H380	69.4	2,530	71.3	2,585	73.3	2,645	75.2	2,700	77.1	2,760	61,900	100%
Hodgdon Varget	65.1	2,540	66.9	2,595	68.7	2,650	70.5	2,705	72.3	2,760	61,900	92%
Alliant Reloder 17	71.6	2,510	73.6	2,570	75.6	2,630	77.6	2,695	79.6	2,755	61,800	98%
Reload Swiss RS70	76.5	2,485	78.6	2,550	80.8	2,615	82.9	2,680	85.0	2,740	59,000	105%
IMR 4955	76.0	2,470	78.1	2,535	80.2	2,600	82.3	2,660	84.4	2,725	61,800	104%
Alliant Reloder 15	64.9	2,505	66.7	2,555	68.5	2,610	70.3	2,665	72.1	2,720	61,900	94%
Winchester StaBALL Match	65.0	2,495	66.8	2,550	68.6	2,605	70.4	2,660	72.2	2,715	61,900	99%
Hodgdon CFE 223	66.0	2,480	67.8	2,535	69.7	2,590	71.5	2,645	73.3	2,700	61,900	91%
Vihtavuori N540	63.7	2,480	65.5	2,535	67.3	2,590	69.0	2,640	70.8	2,695	61,900	92%
Shooters World Long Rifle	67.1	2,455	68.9	2,510	70.8	2,565	72.7	2,625	74.5	2,680	61,900	100%

300 gr Bullet · 25" barrel

COAL: 3.290" • Bullet length: 1.373" • Seat depth: 0.663" • Usable capacity: 81.7 / 99.3 gr H_2O

Powder	STEP 1 · 90%		STEP 2		STEP 3		STEP 4		STEP 5 · LIMIT			
	gr	fps	gr	fps	gr	fps	gr	fps	gr	fps	psi	Fill
Hodgdon SUPERFORMANCE	75.7	2,480	77.8	2,540	79.9	2,600	82.0	2,665	84.1	2,725	61,900	101%
Accurate 4350	73.8	2,480	75.8	2,540	77.9	2,600	80.0	2,660	82.0	2,720	61,700	105%
Winchester StaBALL 6.5	71.4	2,455	73.4	2,515	75.3	2,565	77.3	2,625	79.3	2,680	62,000	98%
Reload Swiss RS60	70.7	2,435	72.7	2,495	74.7	2,555	76.6	2,615	78.6	2,675	61,900	99%
Reload Swiss RS70	76.1	2,430	78.2	2,490	80.3	2,550	82.4	2,610	84.5	2,675	62,000	104%
Reload Swiss RS62	74.2	2,430	76.3	2,490	78.3	2,550	80.4	2,610	82.4	2,670	61,200	105%
Norma 204	71.3	2,425	73.3	2,480	75.3	2,540	77.2	2,595	79.2	2,655	61,800	102%
Alliant Reloder 16	69.5	2,420	71.4	2,475	73.3	2,530	75.3	2,585	77.2	2,640	61,600	105%
Alliant Reloder 17	70.0	2,400	72.0	2,460	73.9	2,515	75.8	2,575	77.8	2,635	61,900	96%
Reload Swiss RS52	65.1	2,420	66.9	2,475	68.7	2,530	70.5	2,580	72.3	2,635	61,900	93%
IMR 4350	70.7	2,405	72.7	2,460	74.6	2,515	76.5	2,570	78.5	2,630	61,800	103%
Winchester 760	69.7	2,405	71.6	2,460	73.6	2,520	75.5	2,575	77.4	2,630	62,000	97%
Hodgdon H4350	71.0	2,395	73.0	2,450	75.0	2,510	76.9	2,565	78.9	2,625	61,800	97%
Accurate 2700	68.1	2,395	70.0	2,455	71.9	2,510	73.8	2,565	75.7	2,620	61,900	94%
IMR 4955	74.3	2,380	76.3	2,435	78.4	2,500	80.5	2,560	82.5	2,620	61,800	102%
Winchester Supreme 780	76.6	2,365	78.7	2,425	80.8	2,485	83.0	2,550	85.1	2,610	58,700	105%
Hodgdon H380	67.0	2,380	68.8	2,430	70.7	2,485	72.6	2,540	74.4	2,595	61,800	97%
Hodgdon Varget	62.8	2,385	64.5	2,435	66.3	2,490	68.0	2,540	69.8	2,595	62,000	89%
Vihtavuori N550	66.2	2,385	68.0	2,435	69.9	2,490	71.8	2,545	73.6	2,595	62,000	95%
Alliant Reloder 15	62.2	2,340	63.9	2,390	65.7	2,445	67.4	2,495	69.1	2,540	61,800	90%

350 gr Bullet · 25" barrel

COAL: 3.280" • Bullet length: 1.737" • Seat depth: 1.037" • Usable capacity: 74.0 / 99.3 gr H_2O

Powder	STEP 1 · 90%		STEP 2		STEP 3		STEP 4		STEP 5 · LIMIT			
	gr	fps	gr	fps	gr	fps	gr	fps	gr	fps	psi	Fill
Hodgdon SUPERFORMANCE	68.7	2,265	70.6	2,320	72.5	2,370	74.4	2,430	76.3	2,485	61,800	101%
Accurate 4350	66.9	2,260	68.8	2,315	70.6	2,370	72.5	2,425	74.3	2,475	61,800	105%
Reload Swiss RS70	68.9	2,220	70.8	2,275	72.7	2,330	74.6	2,385	76.5	2,440	61,800	104%
Reload Swiss RS60	64.2	2,225	66.0	2,280	67.8	2,335	69.5	2,385	71.3	2,435	61,900	99%
Reload Swiss RS62	67.1	2,215	69.0	2,270	70.8	2,320	72.7	2,380	74.6	2,435	60,800	105%
Winchester StaBALL 6.5	64.6	2,220	66.4	2,275	68.2	2,325	70.0	2,375	71.8	2,425	62,000	98%
Alliant Power Pro 4000-MR	66.8	2,195	68.7	2,250	70.5	2,300	72.3	2,355	74.2	2,410	61,900	102%
Norma 204	64.6	2,200	66.4	2,255	68.2	2,305	70.0	2,360	71.8	2,410	61,900	102%
Hodgdon H4831SC	69.4	2,180	71.3	2,230	73.3	2,290	75.2	2,340	77.1	2,395	60,600	105%
IMR 4955	67.3	2,175	69.2	2,230	71.0	2,285	72.9	2,340	74.8	2,395	61,800	102%
Alliant Reloder 16	62.6	2,195	64.3	2,240	66.0	2,290	67.8	2,340	69.5	2,390	62,000	104%
Winchester Supreme 780	69.4	2,175	71.3	2,225	73.3	2,280	75.2	2,335	77.1	2,390	58,600	105%
Hodgdon H4350	63.9	2,180	65.7	2,230	67.5	2,280	69.2	2,330	71.0	2,385	61,800	97%
IMR 4350	63.6	2,180	65.4	2,230	67.2	2,285	68.9	2,330	70.7	2,385	61,800	103%
Winchester 760	62.9	2,180	64.7	2,235	66.4	2,280	68.2	2,335	69.9	2,385	61,800	97%
Alliant Power Pro 2000-MR	60.8	2,180	62.5	2,230	64.2	2,280	65.8	2,325	67.5	2,375	61,900	96%
Ramshot Big Game	61.5	2,175	63.2	2,225	64.9	2,270	66.6	2,320	68.3	2,370	61,800	94%
IMR 4451	62.0	2,130	63.7	2,180	65.5	2,230	67.2	2,280	68.9	2,330	61,800	97%
Vihtavuori N550	59.3	2,145	61.0	2,190	62.6	2,235	64.3	2,285	65.9	2,330	61,800	94%
Shooters World SW4350	63.6	2,125	65.4	2,175	67.2	2,225	68.9	2,275	70.7	2,325	61,900	104%

.375 Weatherby Magnum

Roy Weatherby designed the .375 Weatherby Magnum in 1944 at his shop in South Gate in California. He put it into production in 1945. It is an improved version of the .375 H&H Magnum. The case body is blown out to remove most of its taper and finished with Weatherby's signature double-radius shoulder. The added powder capacity gives roughly 200 to 250 fps more velocity than the .375 H&H with bullets of the same weight.

Factory loads drive 270-grain bullets at about 2,940 fps and 300-grain bullets at about 2,800 fps. This makes the cartridge suitable for dangerous game on African safari. It is also a flat-shooting choice for the largest plains game. Weatherby stopped producing the ammunition in 1960 after the larger .378 Weatherby Magnum took its place. The company brought it back in 2001 in response to demand. The cartridge is standardized by the Commission Internationale Permanente (C.I.P.).

Cartridge specifications	
Bullet Diameter	**0.375" (9.53 mm)**
Max Case Length	**2.860" (72.64 mm)**
Case Trim Length	**2.850" (72.39 mm)**
Max COAL	**3.563" (90.50 mm)**
Primer Pocket	**Large Rifle**
Standard Twist	**1:12"**
Case Capacity	**105.3 gr H_2O**
Max Pressure	**4,400 bar / 63,817 psi (C.I.P.)**

225 gr Bullet · 25" barrel

COAL: 3.563" • Bullet length: 1.120" • Seat depth: 0.417" • Usable capacity: 93.7 / 105.3 gr H_2O

Powder	STEP 1 · 90%		STEP 2		STEP 3		STEP 4		STEP 5 · LIMIT			
	gr	fps	gr	fps	gr	fps	gr	fps	gr	fps	psi	Fill
Winchester StaBALL 6.5	83.2	2,855	85.5	2,920	87.8	2,985	90.1	3,055	92.4	3,120	63,700	99%
Hodgdon SUPERFORMANCE	87.7	2,825	90.1	2,890	92.6	2,965	95.0	3,035	97.4	3,110	63,700	102%
Accurate 4350	84.7	2,810	87.0	2,875	89.4	2,945	91.8	3,015	94.1	3,085	61,300	105%
Hodgdon Leverevolution	73.5	2,830	75.5	2,890	77.6	2,955	79.7	3,020	81.7	3,080	63,600	83%
Reload Swiss RS52	76.1	2,830	78.2	2,890	80.3	2,955	82.4	3,015	84.5	3,080	63,700	95%
Hodgdon BL-C(2)	76.5	2,820	78.6	2,885	80.8	2,950	82.9	3,015	85.0	3,075	63,700	91%
Ramshot Big Game	80.2	2,820	82.4	2,885	84.7	2,950	86.9	3,015	89.1	3,075	63,700	97%
Winchester 748	77.8	2,820	80.0	2,885	82.1	2,950	84.3	3,015	86.4	3,075	63,700	95%
Alliant Power Pro 2000-MR	78.8	2,810	81.0	2,870	83.2	2,935	85.4	3,000	87.6	3,065	63,700	98%
Norma 204	82.8	2,790	85.1	2,860	87.4	2,925	89.7	2,995	92.0	3,065	63,800	103%
Reload Swiss RS60	82.1	2,780	84.4	2,850	86.7	2,920	88.9	2,985	91.2	3,055	63,700	100%
Accurate 2700	79.5	2,790	81.7	2,850	83.9	2,915	86.1	2,980	88.3	3,045	63,700	96%
Hodgdon H414	80.4	2,780	82.6	2,845	84.8	2,905	87.1	2,975	89.3	3,040	63,800	97%
Alliant Reloder 15	75.0	2,795	77.1	2,855	79.2	2,915	81.2	2,975	83.3	3,035	63,800	95%
Alliant TS 15.5	73.6	2,780	75.6	2,840	77.7	2,905	79.8	2,970	81.8	3,030	63,700	94%
Vihtavuori N150	75.2	2,775	77.3	2,840	79.4	2,900	81.5	2,960	83.6	3,025	63,800	100%
Alliant Reloder 17	81.3	2,740	83.5	2,805	85.8	2,875	88.0	2,940	90.3	3,010	63,800	97%
Hodgdon Varget	73.0	2,770	75.0	2,830	77.0	2,890	79.1	2,950	81.1	3,010	63,700	90%
Reload Swiss RS62	85.1	2,720	87.4	2,790	89.8	2,860	92.2	2,935	94.5	3,000	61,500	105%
Hodgdon H4895	70.7	2,745	72.7	2,805	74.7	2,865	76.6	2,925	78.6	2,985	63,800	87%

235 gr Bullet · 25" barrel

COAL: 3.525" • Bullet length: 1.040" • Seat depth: 0.375" • Usable capacity: 94.8 / 105.3 gr H_2O

Powder	STEP 1 · 90%		STEP 2		STEP 3		STEP 4		STEP 5 · LIMIT			
	gr	fps	gr	fps	gr	fps	gr	fps	gr	fps	psi	Fill
Accurate 4350	85.7	2,810	88.1	2,875	90.5	2,945	92.8	3,010	95.2	3,085	63,500	105%
Hodgdon SUPERFORMANCE	87.6	2,795	90.0	2,860	92.4	2,930	94.9	3,005	97.3	3,075	63,600	100%
Winchester StaBALL 6.5	82.9	2,810	85.2	2,870	87.5	2,935	89.8	3,000	92.1	3,070	63,600	98%
Hodgdon H4350	85.1	2,760	87.5	2,830	89.8	2,895	92.2	2,965	94.6	3,035	63,800	101%
Reload Swiss RS52	75.8	2,780	77.9	2,840	80.0	2,900	82.1	2,965	84.2	3,025	63,700	93%
Winchester 748	77.5	2,775	79.7	2,835	81.8	2,900	83.9	2,960	86.1	3,025	63,700	93%
Ramshot Big Game	79.8	2,770	82.0	2,830	84.3	2,895	86.5	2,960	88.7	3,020	63,700	95%
Alliant Power Pro 2000-MR	78.6	2,765	80.8	2,825	82.9	2,885	85.1	2,950	87.3	3,015	63,800	97%
IMR 4350	83.4	2,745	85.7	2,810	88.1	2,880	90.4	2,945	92.7	3,010	62,300	105%
Hodgdon H380	78.8	2,745	81.0	2,805	83.2	2,870	85.3	2,930	87.5	2,990	63,800	98%
Hodgdon H414	80.1	2,735	82.3	2,800	84.5	2,860	86.8	2,930	89.0	2,990	63,600	96%
Alliant Reloder 15	74.3	2,735	76.4	2,795	78.4	2,850	80.5	2,910	82.6	2,975	63,700	93%
IMR 4007 SSC	80.9	2,695	83.2	2,765	85.4	2,825	87.7	2,895	89.9	2,960	63,800	102%
Vihtavuori N150	74.6	2,720	76.7	2,780	78.8	2,840	80.8	2,900	82.9	2,960	63,700	98%
Hodgdon H4831SC	89.0	2,675	91.5	2,745	94.0	2,815	96.4	2,885	98.9	2,955	63,000	105%
Hodgdon Varget	72.6	2,720	74.6	2,775	76.7	2,840	78.7	2,895	80.7	2,955	63,800	88%
Winchester StaBALL Match	73.4	2,710	75.5	2,770	77.5	2,825	79.5	2,885	81.6	2,945	63,800	96%
Reload Swiss RS50	74.0	2,690	76.0	2,750	78.1	2,805	80.2	2,865	82.2	2,925	63,600	91%
Hodgdon H4895	70.2	2,690	72.2	2,750	74.1	2,805	76.0	2,860	78.0	2,920	63,700	85%
Winchester Supreme 780	89.0	2,640	91.5	2,710	94.0	2,780	96.4	2,845	98.9	2,915	60,800	105%

300 gr Bullet · 25" barrel

COAL: 3.563" • Bullet length: 1.291" • Seat depth: 0.588" • Usable capacity: 88.9 / 105.3 gr H_2O

Powder	STEP 1 · 90%		STEP 2		STEP 3		STEP 4		STEP 5 · LIMIT			
	gr	fps	gr	fps	gr	fps	gr	fps	gr	fps	psi	Fill
Vihtavuori N555	77.9	2,510	80.1	2,565	82.2	2,625	84.3	2,680	86.5	2,740	63,800	104%
Hodgdon SUPERFORMANCE	79.7	2,495	81.9	2,555	84.2	2,615	86.4	2,675	88.6	2,735	63,800	98%
Accurate 4350	77.8	2,495	80.0	2,555	82.1	2,615	84.3	2,675	86.4	2,730	63,700	102%
Norma URP	76.2	2,465	78.3	2,520	80.5	2,585	82.6	2,640	84.7	2,700	63,700	105%
Reload Swiss RS62	78.6	2,460	80.8	2,520	82.9	2,575	85.1	2,635	87.3	2,700	63,700	102%
Reload Swiss RS70	80.3	2,450	82.5	2,510	84.8	2,570	87.0	2,630	89.2	2,690	63,700	101%
Reload Swiss RS60	74.5	2,455	76.6	2,510	78.7	2,570	80.7	2,625	82.8	2,685	63,700	96%
Hodgdon H4350	76.2	2,450	78.3	2,505	80.5	2,565	82.6	2,620	84.7	2,680	63,700	96%
Ramshot Hunter	77.9	2,450	80.1	2,505	82.3	2,565	84.4	2,625	86.6	2,680	63,700	103%
Winchester Supreme 780	82.4	2,435	84.7	2,495	87.0	2,555	89.3	2,615	91.6	2,680	63,800	104%
IMR 4350	75.5	2,445	77.6	2,500	79.7	2,555	81.8	2,615	83.9	2,670	63,800	101%
IMR 4831	77.9	2,435	80.1	2,495	82.2	2,550	84.3	2,610	86.5	2,670	63,600	104%
Alliant Reloder 16	72.9	2,425	74.9	2,475	77.0	2,535	79.0	2,585	81.0	2,640	63,700	101%
Norma MRP	80.7	2,400	83.0	2,460	85.2	2,520	87.5	2,580	89.7	2,640	61,300	105%
Winchester 748	69.8	2,420	71.7	2,475	73.7	2,530	75.6	2,580	77.5	2,635	63,700	90%
Hodgdon H414	72.4	2,410	74.4	2,465	76.4	2,520	78.4	2,575	80.4	2,630	63,800	92%
Vihtavuori N160	76.7	2,405	78.8	2,460	81.0	2,520	83.1	2,575	85.2	2,630	63,700	104%
Alliant Reloder 15	65.7	2,355	67.5	2,405	69.3	2,455	71.2	2,505	73.0	2,555	63,700	88%
Hodgdon Varget	64.7	2,350	66.5	2,400	68.3	2,450	70.1	2,500	71.9	2,550	63,800	84%
Vihtavuori N150	66.1	2,350	67.9	2,395	69.8	2,450	71.6	2,500	73.4	2,545	63,800	93%

.378 Weatherby Magnum

Roy Weatherby designed the .378 Weatherby Magnum in 1953. His own African hunting experience had convinced him that he needed more power than his .375 Weatherby Magnum delivered. The design was inspired by the .416 Rigby. This original belted case has no parent cartridge. It holds about 43 percent more powder than the .375 H&H Magnum. The large powder charge required hotter ignition. Federal developed its No. 215 Large Rifle Magnum primer specifically for this cartridge.

Weatherby factory loads drive 270-grain bullets at about 3,180 fps and 300-grain bullets at about 2,925 fps. The .378 is used primarily for large and dangerous African game and for the largest North American bears. Its recoil is severe. Free recoil is about 72 foot-pounds in a 9-pound rifle. Weatherby Mark V rifles in this chambering are commonly fitted with muzzle brakes. The case is the parent of the .30-378, .338-378, .416 and .460 Weatherby Magnums.

Cartridge specifications	
Bullet Diameter	**0.375" (9.53 mm)**
Max Case Length	**2.913" (73.99 mm)**
Case Trim Length	**2.903" (73.74 mm)**
Max COAL	**3.655" (92.84 mm)**
Primer Pocket	**Large Rifle**
Standard Twist	**1:12"**
Case Capacity	**133.3 gr H_2O**
Max Pressure	**4,400 bar / 63,817 psi (C.I.P.)**

235 gr Bullet · 25" barrel

COAL: 3.630" • Bullet length: 1.152" • Seat depth: 0.435" • Usable capacity: 121.2 / 133.3 gr H_2O

Powder	STEP 1 · 90%		STEP 2		STEP 3		STEP 4		STEP 5 · LIMIT			
	gr	fps	gr	fps	gr	fps	gr	fps	gr	fps	psi	Fill
Alliant Reloder 26	112.4	3,010	115.5	3,085	118.7	3,165	121.8	3,245	124.9	3,325	63,700	104%
Vihtavuori N560	109.4	3,000	112.5	3,075	115.5	3,145	118.5	3,215	121.6	3,290	63,800	105%
Accurate 4350	101.3	3,000	104.1	3,070	106.9	3,140	109.7	3,210	112.5	3,280	63,800	97%
Hodgdon SUPERFORMANCE	103.3	2,995	106.2	3,065	109.0	3,135	111.9	3,205	114.8	3,280	63,800	93%
Alliant Reloder 22	107.3	2,950	110.3	3,025	113.3	3,100	116.2	3,175	119.2	3,250	63,700	104%
Reload Swiss RS62	102.6	2,960	105.4	3,030	108.3	3,105	111.2	3,175	114.0	3,250	63,800	98%
Hodgdon Hybrid 100V	97.9	2,960	100.6	3,030	103.3	3,100	106.1	3,170	108.8	3,240	63,700	101%
Alliant Reloder 19	104.3	2,935	107.2	3,005	110.1	3,080	113.0	3,150	115.9	3,225	63,800	102%
Hodgdon H4350	100.0	2,940	102.8	3,010	105.5	3,075	108.3	3,145	111.1	3,215	63,700	92%
IMR 7828SSC	109.9	2,915	113.0	2,990	116.0	3,065	119.0	3,140	122.1	3,215	63,700	105%
IMR 4350	98.8	2,935	101.5	3,005	104.3	3,070	107.0	3,140	109.8	3,210	63,800	97%
Hodgdon H4831SC	106.6	2,915	109.5	2,985	112.5	3,060	115.5	3,135	118.4	3,205	63,700	98%
Alliant Power Pro 4000-MR	101.8	2,925	104.6	2,990	107.4	3,060	110.3	3,135	113.1	3,200	63,800	95%
Hodgdon H4831	106.6	2,890	109.5	2,960	112.5	3,035	115.5	3,110	118.4	3,185	63,700	105%
Alliant Reloder 16	95.6	2,925	98.3	2,990	100.9	3,050	103.5	3,115	106.2	3,180	63,700	97%
Vihtavuori N165	106.3	2,890	109.3	2,960	112.2	3,030	115.1	3,100	118.1	3,170	63,800	105%
Vihtavuori N160	100.4	2,895	103.2	2,965	106.0	3,030	108.7	3,095	111.5	3,165	63,800	100%
Accurate 3100	104.4	2,870	107.3	2,940	110.2	3,015	113.1	3,085	116.0	3,160	63,800	104%
Accurate MagPro	112.1	2,855	115.2	2,930	118.3	3,005	121.5	3,085	124.6	3,160	60,500	105%
Vihtavuori N170	110.1	2,860	113.1	2,925	116.2	2,995	119.3	3,065	122.3	3,130	61,100	105%

270 gr Bullet · 25" barrel

COAL: 3.630" • Bullet length: 1.441" • Seat depth: 0.724" • Usable capacity: 113.1 / 133.3 gr H_2O

Powder	STEP 1 · 90%		STEP 2		STEP 3		STEP 4		STEP 5 · LIMIT			
	gr	fps	gr	fps	gr	fps	gr	fps	gr	fps	psi	Fill
Alliant Reloder 26	104.6	2,820	107.5	2,890	110.4	2,960	113.3	3,035	116.2	3,105	63,700	103%
Hodgdon SUPERFORMANCE	96.0	2,785	98.7	2,850	101.3	2,915	104.0	2,980	106.7	3,050	63,700	92%
Vihtavuori N560	100.9	2,780	103.7	2,845	106.5	2,910	109.3	2,975	112.1	3,045	63,700	104%
Accurate 4350	93.9	2,785	96.5	2,845	99.1	2,910	101.7	2,975	104.3	3,040	63,700	96%
Alliant Reloder 22	99.7	2,760	102.5	2,830	105.3	2,900	108.0	2,965	110.8	3,035	63,700	104%
Reload Swiss RS62	95.5	2,765	98.2	2,830	100.8	2,895	103.4	2,960	106.1	3,030	63,800	98%
Norma URP	92.5	2,760	95.1	2,825	97.7	2,890	100.2	2,955	102.8	3,020	63,700	100%
Alliant Reloder 19	97.0	2,745	99.7	2,810	102.4	2,880	105.1	2,945	107.8	3,015	63,700	101%
IMR 7828SSC	101.9	2,730	104.7	2,800	107.6	2,870	110.4	2,935	113.2	3,005	63,800	104%
Winchester Supreme 780	99.9	2,730	102.7	2,800	105.5	2,865	108.2	2,930	111.0	3,000	63,700	99%
Norma MRP	99.5	2,730	102.3	2,795	105.0	2,860	107.8	2,930	110.6	2,995	63,800	102%
Vihtavuori N555	91.6	2,745	94.1	2,810	96.7	2,870	99.3	2,935	101.8	2,995	63,800	97%
Hodgdon H4831SC	99.2	2,725	102.0	2,790	104.7	2,860	107.5	2,925	110.2	2,990	63,800	98%
Alliant Power Pro 4000-MR	94.5	2,715	97.1	2,780	99.8	2,845	102.4	2,910	105.0	2,975	63,700	95%
Hodgdon H4831	98.9	2,705	101.7	2,770	104.4	2,835	107.2	2,905	109.9	2,970	63,700	104%
IMR 7828	100.1	2,700	102.9	2,770	105.7	2,835	108.4	2,900	111.2	2,970	63,700	99%
Accurate MagPro	104.7	2,685	107.6	2,755	110.5	2,825	113.4	2,895	116.3	2,965	60,500	105%
IMR 4350	91.2	2,720	93.7	2,780	96.3	2,845	98.8	2,905	101.3	2,965	63,700	96%
Vihtavuori N160	92.7	2,680	95.3	2,740	97.8	2,800	100.4	2,860	103.0	2,925	63,800	99%
Vihtavuori N170	102.8	2,670	105.7	2,735	108.5	2,795	111.3	2,860	114.2	2,925	63,100	105%

300 gr Bullet · 25" barrel

COAL: 3.635" • Bullet length: 1.372" • Seat depth: 0.650" • Usable capacity: 116.0 / 133.3 gr H_2O

Powder	STEP 1 · 90%		STEP 2		STEP 3		STEP 4		STEP 5 · LIMIT			
	gr	fps	gr	fps	gr	fps	gr	fps	gr	fps	psi	Fill
Alliant Reloder 26	103.4	2,710	106.3	2,780	109.2	2,845	112.0	2,910	114.9	2,980	63,700	99%
Ramshot Grand	105.9	2,670	108.9	2,740	111.8	2,805	114.8	2,875	117.7	2,945	63,800	103%
Alliant Reloder 23	99.5	2,680	102.3	2,745	105.0	2,810	107.8	2,875	110.6	2,940	63,800	103%
Vihtavuori N565	104.3	2,670	107.2	2,735	110.1	2,800	113.0	2,865	115.9	2,930	63,200	105%
Accurate MagPro	106.2	2,650	109.2	2,720	112.1	2,785	115.0	2,855	118.0	2,925	63,700	104%
Alliant Reloder 22	98.6	2,655	101.3	2,715	104.0	2,780	106.8	2,845	109.5	2,910	63,800	100%
Ramshot Magnum	109.3	2,635	112.3	2,700	115.3	2,770	118.4	2,840	121.4	2,910	63,400	105%
Reload Swiss RS76	107.7	2,635	110.7	2,700	113.7	2,765	116.7	2,835	119.7	2,900	63,700	104%
Alliant Reloder 19	96.1	2,640	98.8	2,705	101.4	2,765	104.1	2,830	106.8	2,895	63,700	98%
IMR 4831	94.3	2,640	96.9	2,700	99.5	2,760	102.2	2,825	104.8	2,890	63,800	97%
IMR 7828SSC	100.2	2,620	103.0	2,685	105.8	2,750	108.5	2,810	111.3	2,875	63,700	100%
Winchester Supreme 780	98.5	2,620	101.2	2,685	104.0	2,750	106.7	2,810	109.4	2,875	63,700	95%
Norma MRP	98.3	2,615	101.0	2,675	103.8	2,740	106.5	2,800	109.2	2,865	63,700	98%
Vihtavuori N560	97.8	2,625	100.5	2,685	103.3	2,745	106.0	2,805	108.7	2,865	63,700	98%
Hodgdon H4831	97.7	2,595	100.4	2,655	103.1	2,720	105.8	2,780	108.5	2,845	63,800	100%
IMR 7828	98.5	2,595	101.2	2,655	104.0	2,720	106.7	2,780	109.4	2,840	63,700	95%
Ramshot Hunter	92.8	2,605	95.4	2,665	97.9	2,720	100.5	2,780	103.1	2,840	63,700	94%
Hodgdon H4350	90.5	2,600	93.0	2,655	95.5	2,715	98.0	2,775	100.5	2,830	63,700	87%
IMR 4350	89.3	2,580	91.8	2,640	94.3	2,695	96.7	2,750	99.2	2,810	63,700	92%
Vihtavuori N165	96.0	2,550	98.7	2,605	101.3	2,665	104.0	2,725	106.7	2,785	63,800	99%

.460 Weatherby Magnum

Roy Weatherby developed the .460 Weatherby Magnum in 1957. He necked his .378 Weatherby Magnum case up to hold .458-inch bullets. The work was prompted partly by new regulations in some African countries. These rules prohibited hunting heavy thick-skinned dangerous game with cartridges smaller than .40 caliber. The first rifles were built on Brevex Magnum Mauser actions. Production rifles and ammunition followed in 1959.

Factory ammunition drives a 500-grain bullet at about 2,600 fps from a 26-inch barrel. At its introduction the .460 Weatherby exceeded the .600 Nitro Express in muzzle energy. It remained the most powerful commercially available sporting cartridge for 29 years until the .700 Nitro Express appeared. Recoil is severe. For this reason rifles are built heavy and are often fitted with muzzle brakes. The cartridge is used for elephant, rhinoceros, hippopotamus and Cape buffalo.

Cartridge specifications	
Bullet Diameter	**0.458" (11.63 mm)**
Max Case Length	**2.913" (73.99 mm)**
Case Trim Length	**2.903" (73.74 mm)**
Max COAL	**3.750" (95.25 mm)**
Primer Pocket	**Large Rifle**
Standard Twist	**1:16"**
Case Capacity	**141.5 gr H_2O**
Max Pressure	**4,400 bar / 63,817 psi (C.I.P.)**

350 gr Bullet · 25" barrel

COAL: 3.345" • Bullet length: 0.936" • Seat depth: 0.504" • Usable capacity: 120.5 / 141.5 gr H_2O

Powder	STEP 1 · 90%		STEP 2		STEP 3		STEP 4		STEP 5 · LIMIT			
	gr	fps	gr	fps	gr	fps	gr	fps	gr	fps	psi	Fill
Winchester StaBALL 6.5	113.0	2,760	116.1	2,825	119.3	2,890	122.4	2,955	125.5	3,020	63,700	105%
Reload Swiss RS52	105.6	2,740	108.5	2,800	111.4	2,865	114.4	2,930	117.3	2,990	63,700	102%
Winchester 748	110.0	2,730	113.0	2,795	116.1	2,860	119.2	2,925	122.2	2,990	63,800	104%
Hodgdon BL-C(2)	105.6	2,735	108.5	2,795	111.4	2,855	114.4	2,920	117.3	2,985	63,800	98%
Ramshot Big Game	110.2	2,730	113.3	2,795	116.3	2,860	119.4	2,925	122.4	2,985	63,700	103%
Alliant Reloder 15	106.0	2,730	109.0	2,795	111.9	2,855	114.8	2,915	117.8	2,980	63,800	104%
Hodgdon CFE 223	107.3	2,730	110.3	2,790	113.3	2,855	116.2	2,915	119.2	2,980	63,700	101%
Hodgdon Leverevolution	99.3	2,740	102.0	2,800	104.8	2,860	107.5	2,920	110.3	2,980	63,800	87%
Alliant Power Pro 2000-MR	108.4	2,705	111.4	2,770	114.4	2,830	117.4	2,895	120.4	2,960	62,600	105%
IMR 4895	100.9	2,700	103.7	2,760	106.5	2,820	109.3	2,880	112.1	2,940	63,800	96%
Hodgdon Varget	101.8	2,695	104.6	2,755	107.4	2,810	110.3	2,875	113.1	2,935	63,800	98%
Shooters World Match Rifle	100.4	2,690	103.2	2,750	106.0	2,810	108.8	2,870	111.6	2,935	63,800	95%
Vihtavuori N540	101.8	2,705	104.6	2,760	107.4	2,820	110.3	2,880	113.1	2,935	63,800	100%
Hodgdon H4895	100.0	2,690	102.8	2,750	105.5	2,805	108.3	2,865	111.1	2,925	63,800	95%
Winchester 760	110.8	2,665	113.9	2,730	116.9	2,795	120.0	2,860	123.1	2,925	62,900	105%
IMR 4064	102.6	2,685	105.4	2,740	108.3	2,800	111.2	2,860	114.0	2,920	63,700	101%
Vihtavuori N140	101.3	2,685	104.1	2,745	106.9	2,800	109.7	2,860	112.5	2,920	63,700	95%
Vihtavuori N135	99.2	2,675	102.0	2,730	104.7	2,785	107.5	2,845	110.2	2,900	63,700	99%
Alliant Power Pro Varmint	98.1	2,645	100.8	2,700	103.5	2,760	106.3	2,820	109.0	2,875	63,700	96%
IMR 3031	93.2	2,630	95.8	2,685	98.4	2,740	101.0	2,800	103.6	2,855	63,800	92%

450 gr Bullet · 25" barrel

COAL: 3.720" • Bullet length: 1.484" • Seat depth: 0.677" • Usable capacity: 113.3 / 141.5 gr H_2O

Powder	STEP 1 · 90%		STEP 2		STEP 3		STEP 4		STEP 5 · LIMIT			
	gr	fps	gr	fps	gr	fps	gr	fps	gr	fps	psi	Fill
Norma R123	96.9	2,530	99.6	2,590	102.3	2,650	105.0	2,710	107.7	2,770	63,700	103%
Hodgdon SUPERFORMANCE	109.4	2,420	112.4	2,475	115.5	2,540	118.5	2,600	121.5	2,660	63,400	105%
Winchester StaBALL 6.5	102.1	2,400	104.9	2,455	107.8	2,510	110.6	2,565	113.4	2,620	63,700	101%
Reload Swiss RS60	103.4	2,380	106.3	2,440	109.2	2,495	112.0	2,555	114.9	2,615	63,700	104%
Winchester 748	99.5	2,390	102.3	2,445	105.0	2,495	107.8	2,555	110.6	2,610	63,700	100%
Norma 204	101.9	2,370	104.7	2,425	107.6	2,485	110.4	2,540	113.2	2,595	63,700	105%
Reload Swiss RS52	95.4	2,380	98.1	2,435	100.7	2,485	103.3	2,540	106.0	2,595	63,700	98%
Ramshot Big Game	99.3	2,375	102.0	2,425	104.8	2,480	107.5	2,535	110.3	2,590	63,800	99%
Alliant Power Pro 2000-MR	98.5	2,370	101.2	2,425	104.0	2,480	106.7	2,530	109.4	2,585	63,800	101%
Hodgdon H414	99.5	2,355	102.3	2,410	105.0	2,465	107.8	2,520	110.5	2,575	63,800	99%
Winchester 760	100.9	2,355	103.7	2,410	106.5	2,465	109.3	2,520	112.1	2,575	63,800	102%
Vihtavuori N550	97.1	2,355	99.8	2,410	102.5	2,460	105.2	2,510	107.9	2,565	63,700	100%
Accurate 2700	97.6	2,345	100.3	2,400	103.0	2,455	105.7	2,505	108.4	2,560	63,800	97%
Hodgdon CFE 223	96.3	2,350	99.0	2,405	101.7	2,455	104.3	2,510	107.0	2,560	63,700	96%
Hodgdon H380	97.8	2,340	100.5	2,395	103.3	2,450	106.0	2,505	108.7	2,555	63,800	102%
Alliant Reloder 15	93.7	2,340	96.3	2,395	98.9	2,445	101.5	2,495	104.1	2,545	63,700	98%
IMR 4451	101.3	2,315	104.1	2,370	106.9	2,425	109.8	2,485	112.6	2,540	63,700	103%
IMR 4064	91.1	2,310	93.6	2,355	96.2	2,410	98.7	2,460	101.2	2,510	63,800	96%
IMR 4320	89.9	2,310	92.4	2,360	94.9	2,410	97.4	2,460	99.9	2,510	63,800	89%
Hodgdon H4895	88.7	2,295	91.2	2,345	93.7	2,395	96.1	2,445	98.6	2,495	63,700	90%

500 gr Bullet · 25" barrel

COAL: 3.710" • Bullet length: 1.485" • Seat depth: 0.689" • Usable capacity: 112.9 / 141.5 gr H_2O

Powder	STEP 1 · 90%		STEP 2		STEP 3		STEP 4		STEP 5 · LIMIT			
	gr	fps	gr	fps	gr	fps	gr	fps	gr	fps	psi	Fill
Norma R123	93.8	2,410	96.4	2,465	99.0	2,520	101.6	2,575	104.2	2,630	63,700	100%
Hodgdon SUPERFORMANCE	106.7	2,315	109.7	2,370	112.7	2,430	115.6	2,485	118.6	2,545	63,800	103%
Hodgdon H4350	105.8	2,280	108.7	2,335	111.7	2,395	114.6	2,450	117.5	2,505	63,800	105%
Reload Swiss RS60	100.7	2,275	103.5	2,330	106.3	2,385	109.1	2,440	111.9	2,495	63,700	102%
Winchester 748	96.5	2,265	99.2	2,315	101.8	2,365	104.5	2,415	107.2	2,470	63,700	98%
Winchester StaBALL 6.5	98.7	2,265	101.5	2,315	104.2	2,365	107.0	2,420	109.7	2,470	63,800	98%
Alliant Power Pro 4000-MR	104.5	2,245	107.4	2,300	110.3	2,355	113.2	2,410	116.1	2,465	63,700	105%
Reload Swiss RS70	105.8	2,235	108.7	2,290	111.7	2,345	114.6	2,400	117.5	2,455	60,700	105%
Alliant Power Pro 2000-MR	95.2	2,240	97.8	2,285	100.5	2,340	103.2	2,390	105.8	2,440	63,800	98%
Ramshot Big Game	95.9	2,240	98.6	2,290	101.2	2,340	103.8	2,390	106.5	2,440	63,700	96%
Winchester 760	97.8	2,230	100.5	2,285	103.3	2,335	106.0	2,385	108.7	2,440	63,700	99%
Hodgdon H414	96.4	2,230	99.1	2,285	101.8	2,335	104.4	2,385	107.1	2,435	63,800	97%
IMR 4955	105.9	2,210	108.9	2,265	111.8	2,320	114.8	2,380	117.7	2,435	61,000	105%
Accurate 2700	94.5	2,215	97.1	2,265	99.8	2,320	102.4	2,370	105.0	2,420	63,700	95%
Hodgdon H380	94.2	2,205	96.8	2,255	99.5	2,305	102.1	2,355	104.7	2,405	63,800	99%
Vihtavuori N550	92.5	2,200	95.1	2,250	97.7	2,295	100.2	2,345	102.8	2,390	63,700	96%
Alliant Reloder 15	89.8	2,195	92.3	2,245	94.8	2,290	97.3	2,340	99.8	2,385	63,700	94%
Vihtavuori N150	90.5	2,195	93.0	2,240	95.5	2,290	98.0	2,335	100.5	2,385	63,800	100%
IMR 4320	87.1	2,175	89.5	2,225	91.9	2,270	94.4	2,320	96.8	2,370	63,700	86%
Hodgdon H4895	85.2	2,150	87.6	2,200	90.0	2,245	92.3	2,290	94.7	2,335	63,800	87%

Reference

Conversions

Factors marked exact are exact by definition. Other factors are rounded, most to six significant figures, and the worked examples are rounded further (see Appendix A for formulas).

Mass. 1 gr = 0.06479891 g (exact); 1 g = 15.4324 gr; 1 kg = 15,432.4 gr; 1 lb = 7,000 gr (exact); 1 oz = 437.5 gr (exact).

Capacity. 1 cm³ of water at 20 °C weighs about 15.4 gr.

Length. 1 inch = 25.4 mm (exact); 1 mm = 0.0393701 inch; 1 yard = 0.9144 m (exact); 1 m = 1.09361 yards; 1 foot = 0.3048 m (exact); 1 m = 3.28084 feet. So .002 inch is 0.0508 mm.

Pressure. 1 psi = 0.0689476 bar = 0.00689476 MPa; 1 bar = 14.5038 psi; 1 MPa = 10 bar (exact) = 145.038 psi. So 62,000 psi is about 4,275 bar, or 427.5 MPa. Units convert; standards do not. A C.I.P. limit in bar is not a SAAMI limit in psi, and CUP does not convert to psi at all (see Chapter 4).

Air pressure. 1 inHg = 33.8639 hPa (mbar); 1 hPa = 0.0295300 inHg. Standard sea-level pressure is 29.92 inHg, or 1,013.25 hPa.

Velocity. 1 fps = 0.3048 m/s (exact); 1 m/s = 3.28084 fps. So 2,800 fps is 853.4 m/s.

Wind. 1 mph = 0.44704 m/s (exact) = 1.46667 fps; 1 m/s = 2.23694 mph; 1 km/h = 0.621371 mph.

Angles. 1 MOA = 0.290888 mil; 1 mil = 3.43775 MOA. 1 MOA is 1.0472 inches at 100 yards and 2.909 cm at 100 meters; 1 mil is 3.6 inches and 10 cm. Rounding MOA to 1 inch is about 4.5 percent small, almost half an inch per MOA at 1,000 yards.

Temperature and energy. °F = °C × 9/5 + 32; °C = (°F − 32) × 5/9. 1 ft·lbf = 1.35582 J; 1 J = 0.737562 ft·lbf. The standard day in ballistics is 59 °F (15 °C).

Inches per MOA and per mil by distance

Distance (yd)	1 MOA	1 mil	1/4 MOA click	0.1 mil click
100	1.05"	3.60"	.26"	.36"
200	2.09"	7.20"	.52"	.72"
300	3.14"	10.80"	.79"	1.08"
400	4.19"	14.40"	1.05"	1.44"
500	5.24"	18.00"	1.31"	1.80"
600	6.28"	21.60"	1.57"	2.16"
700	7.33"	25.20"	1.83"	2.52"
800	8.38"	28.80"	2.09"	2.88"
900	9.42"	32.40"	2.36"	3.24"
1,000	10.47"	36.00"	2.62"	3.60"

Appendix A

Statistics and Formulas Reference Sheet

Symbols. n, g, k: shots in a sample, groups in a composite, shots in one group. MPI: mean point of impact, a group's center. r: one shot's distance from its group's center. MR: mean radius. SD, s: a sample standard deviation, such as a velocity SD. σ: standard deviation on one axis for shots on a target. z: how many σ from the center. df: degrees of freedom. Σ: the sum over all shots. F: the ratio of two variances. p, α: a test's p-value and its threshold. X_A, X_B: X for load A or B; B is the load with the larger figure.

A.1 Workshop and target formulas

Group size as an angle

```
Group in MOA = group (in) ÷ (1.0472 × distance (yd) ÷ 100)
Group in mil = group (in) ÷ (3.6 × distance (yd) ÷ 100)
```

For example, a .75 inch group at 300 yards is 0.75 ÷ 3.1416 = 0.24 MOA, or 0.75 ÷ 10.8 = 0.069 mil. Example numbers. Not load data.

Kinetic energy

```
Energy (ft·lbf) = bullet weight (gr) × velocity (fps)² ÷ 450,437
```

The constant is 2 × 7,000 × 32.17405, rounded. That is twice the grains in a pound times standard gravity in ft/s². A 140 gr bullet at 2,700 fps carries 140 × 2,700² ÷ 450,437 = 2,266 ft·lbf. Example numbers. Not load data.

Sectional density and BC

```
Sectional density = bullet weight (gr) ÷ (7,000 × diameter (in)²)
BC                = sectional density ÷ form factor
```

Sectional density is the bullet's weight, in pounds, divided by the square of its diameter. The form factor is the bullet's drag divided by the standard projectile's at the same Mach number (see *The Precision Rifle Handbook*).

Temperature sensitivity slope

```
Slope (fps per °F) = (warm mean − cold mean) ÷ (warm temperature − cold temperature)
```

The means come from sessions in your velocity history, grouped into cold days and warm days (see Chapter 30). Use the slope only between the temperatures those sessions cover. A measured slope can increase the heat margin, never reduce it (see Chapter 28). To correct the card velocity for today's powder temperature (see *The Precision Rifle Handbook*):

```
velocity today = card velocity
                 + slope × (powder temperature today − card temperature)
```

Safety Card

Before you load. Before you fire.

In the workshop

1. Load only when you can give the job your full attention. Never load when tired, ill, hurried or after drinking.
2. Wear safety glasses whenever you load.
3. Keep one powder and one primer type on the workbench. Put everything else away.
4. Use published load data for your exact components. Never substitute a powder because its name or its place on a burn chart looks similar. Never load a powder you cannot identify.
5. Start every new load at the published start load, never below it, and work up in small steps. If a source lists only a maximum, start at least 10 percent below it. Never exceed a published maximum.
6. Work up again from the start load if you change the primer, case maker, bullet, powder, barrel or barrel length. For a new lot of the same component, record the lot and load 10 check rounds. If your charge is at or near the published maximum, load those check rounds one step lower. Load in bulk only after the check at the range.
7. Discard cases with an incipient head separation ring, a split or an enlarged, loose primer pocket. Never load a case longer than its maximum case length.
8. Verify your scale with a check weight at the start of every session.
9. Look into every charged case under good light before you seat a bullet. A double charge or an empty case must never leave the workshop.
10. If you seat a bullet deeper than the published cartridge overall length (COAL), deeper than your recipe, or into the lands (the raised ribs of the rifling), treat it as a new load and work up again from the start load. Measure the cartridge base to ogive (CBTO) and the COAL. Do not guess.
11. At the end of each session, return unused powder to its original container and empty the powder measure completely.

At the range

12. Wear eye and ear protection.
13. Fire the steps of a work-up in order, lowest first, and chronograph every shot. Stop at the published maximum charge or at your velocity ceiling, whichever comes first. Your velocity ceiling is the published velocity at the maximum charge, lowered for a shorter barrel but never raised for a longer one. Stop at a step that gains far more velocity than the steps before it. After any stop, take the unfired rounds home and pull their bullets. Chronograph a new lot's check rounds and compare their velocity with your records. If they run faster by more than twice the noise, the amount two averages can differ by chance (see Chapter 30), lower the charge and work up again from below.
14. Stop at once at any pressure sign. Signs include a stiff bolt lift, an ejector mark and a flattened, cratered or pierced primer. In a semi-automatic, an ejector mark is a sign when it is new or heavier than at the start load (see Chapter 26). The absence of signs does not prove a load is safe.
15. Keep loaded rounds out of the sun and out of a hot chamber. A load near the maximum on a mild day has no margin left for a hot day.
16. If a shot sounds or feels wrong, stop. Unload the rifle and check the bore for a stuck bullet before you fire again. If a round fails to fire, keep the muzzle downrange for at least 30 seconds before you open the action.

In storage and afterward

17. Store powder and primers in their original containers, cool and dry, away from heat, flame and children. Never store powder in a sealed or strong container such as a gun safe. Wash your hands and face after loading, shooting or handling fired cases. Do not eat, drink or smoke until you have washed.

With any software prediction

18. Every predicted pressure is for learning. It is never intended to replace published data. Never change a model's powder settings to match your chronograph, since that moves its predicted pressure too.

Manufacturers and Data Sources

Accurate Powders. *Miles City, Montana, USA.* Canister powder line (Accurate 1680, 2230, 2520, 4350) used across benchrest, service-rifle and hunting bottleneck cartridges.

Alexander Arms. Brass, ammo.

Alliant Powder. *Radford, Virginia, USA.* Maker of smokeless propellants including the Reloder series (Reloder 7 through Reloder 50), AR-Comp, Varmint and the Power Pro spherical rifle powders.

Alpha Munitions. *Salt Lake City, Utah, USA.* American maker of rifle brass cases featuring proprietary Optimized Case Design (OCD) case-head geometry.

Atlas Development Group (ADG). *Belgrade, Montana, USA.* Maker of rifle brass with a focus on magnum cartridges.

Barnes Bullets, LLC. *Mona, Utah, USA.* Maker of monolithic solid-copper expanding bullets such as the TSX, TTSX, LRX and Varmint Grenade. Publishes pressure-tested load data for its lead-free bullets.

Berger Bullets. *Mesa, Arizona, USA.* Maker of match, tactical and VLD (Very Low Drag) bullets. Its line includes secant and hybrid ogive designs.

Bertram. Brass.

Browning. Brass.

CCI / Cascade Cartridge, Inc. *Lewiston, Idaho, USA.* Primer maker. Its line includes the BR-2, BR-4, No. 41 and No. 34 military-specification primers and standard Boxer primers.

Cutting Edge Bullets. Bullet.

Federal Ammunition. *Anoka, Minnesota, USA.* Ammunition and component maker. Its Gold Medal match primers include the GM205M, GM210M and GM215M.

Fiocchi. Primer, brass, ammo.

GA Munitions. Brass.

Ginex. Primer.

Hodgdon Powder Company. *Shawnee Mission, Kansas, USA.* Distributor of Hodgdon, IMR, Winchester, Accurate and Ramshot propellants. Publishes an online database of pressure-tested load data.

Hornady Manufacturing Co. *Grand Island, Nebraska, USA.* Maker of match bullets such as the ELD Match and A-Tip and hunting bullets such as the ELD-X and CX. Hornady developed the 6.5 Creedmoor, the 6mm ARC and the PRC cartridge family.

IMI. Brass, ammo.

IMR Powder Company. *Shawnee Mission, Kansas, USA.* Maker of extruded rifle powders such as IMR 3031, IMR 4064, IMR 4895, IMR 4350 and IMR 7828, as well as the discontinued Enduron series.

JAG. Brass.

Lake City. Brass, ammo.

Lapua / Nammo Lapua Oy. *Lapua, Finland.* Maker of match brass, Scenar match bullets and the .338 Lapua Magnum cartridge.

Lyman. Load data.

Magtech. Primer.

Norma Precision AB. *Amotfors, Sweden.* Swedish maker of brass cases, Oryx bonded hunting bullets and 200-series smokeless powders.

Nosler, Inc. *Bend, Oregon, USA.* Originators of the Partition, Ballistic Tip and AccuBond bonded hunting projectiles. Developers of the high-velocity Nosler magnum cartridge family.

Peterson Cartridge Co. *Pittsburgh, Pennsylvania, USA.* American maker of match rifle brass. Its line includes cases for extreme long-range (ELR) competition.

Ramshot Powders. *Miles City, Montana, USA.* Double-base spherical powders such as TAC, Big Game, Hunter and Magnum. They were developed by PB Clermont in Belgium.

Reload Swiss. Powder.

Remington Arms / RemArms. *Lonoke, Arkansas, USA.* Maker of Core-Lokt bullets, Premier match brass and Kleanbore Boxer primers, including the 6-1/2 and 7-1/2 small rifle and 9-1/2 and 9-1/2M large rifle primers.

RUAG. Brass, ammo.

RWS. Brass.

Sako. Brass, ammo.

SBR. Brass.

Sellier & Bellot. Primer, brass, ammo, bullet.

Shooters World Powders. *Spartanburg, South Carolina, USA.* Smokeless propellants manufactured by Explosia in the Czech Republic (Match Rifle, Tactical Rifle, Precision Rifle, Long Rifle, SW4350).

Sierra Bullets. *Sedalia, Missouri, USA.* Maker of the MatchKing, GameKing and Tipped MatchKing (TMK) bullets. Its match bullets are widely used in competition and military ammunition.

Speer Bullets. *Lewiston, Idaho, USA.* Specialists in Uni-Cor electrochemically bonded hunting bullets, Grand Slam big game bullets and law enforcement Gold Dot bonded projectiles.

Starline Brass. *Sedalia, Missouri, USA.* Maker of rifle, handgun and obsolete cartridge brass.

Swift Bullet Company. Bullet.

Vihtavuori / Nammo. *Vihtavuori, Finland.* Finnish maker of single-base powders (N100 series) and high-energy double-base powders (N500 series).

Warner Tool. Bullet.

Weatherby. Brass, ammo.

White River Energetics. Primer.

Winchester Ammunition / Olin. *East Alton, Illinois, USA.* American ammunition and component maker. Its rifle products include Ball Powder propellants such as W748, W760 and the StaBALL series and standard Boxer primers.

Woodleigh. Bullet.

Notes

How to Use This Book

1. Lyman, *Reloading Handbook*, 51st edition, 2022; Philip P. Massaro, *ABC's of Reloading*, 10th edition, Gun Digest Books, 2021; Sierra Bullets, *Rifle and Handgun Reloading Manual*, 6th edition, 2020; Hodgdon, *Annual Manual*, published each year.

Chapter 1. Why Handload, and Why Measure

1. Sharon Lohr, *Lies, Damned Lies, and Statistics Misquotations*, 2023, often credited to W. Edwards Deming, though it is not found in his writings, sharonlohr.com/blog/2023/10/31/statistics-misquotations.
2. U.S. Food and Drug Administration, *Step 3: Clinical Research*, 2018, fda.gov/patients/drug-development-process/step-3-clinical-research.

Chapter 2. Safety in the Workshop, at the Range and in Storage

1. SAAMI, *SAAMI Z299.4-2025: Voluntary Industry Performance Standards for Pressure and Velocity of Centerfire Rifle Ammunition for the Use of Commercial Manufacturers*, p. 24, saami.org/wp-content/uploads/2026/04/SAAMI-Z299.4-CFR-2025-Centerfire-Rifle-Approved-2-10-2025-2026-04-27.pdf.
2. Vihtavuori, *Reloading Guide 2026*, vihtavuori.com/wp-content/uploads/2026/04/Vihtavuori_Reloading_Guide_2026_ENG_web.pdf; Western Powders, *Handloading Guide 8.0*, 2020, hodgdonpowderco.com/wp-content/uploads/2023/04/WesternPowdersHandloadingGuide8.0_WEB-1.pdf; Alliant Powder, *Reloaders' Guide*, 2023, alliantpowder.com/resources/catalog/AP399_2023AlliantPowderReloadersGuide_SinglePgsNoCrops.pdf; SAAMI, *Smokeless Powder: Properties & Storage*, 2022, saami.org/wp-content/uploads/2025/08/Info-Doc-Smokeless-Powder-11-8-2022.pdf.
3. "Case Head Expansion," *24hourcampfire*, 2009, 24hourcampfire.com/ubbthreads/ubbthreads.php/ubb/printthread/Board/11/main/266589/type/thread; Julian S. Hatcher, *Hatcher's Notebook*, 3rd edition, Stackpole Books, 1962; John Barsness, "The Least Reliable 'Pressure Indicator'," *Rifles and Recipes*, excerpt from The Big Book of Gun Gack III, chapter 30, 2022, riflesandrecipes.com/ammunition/the-least-reliable-pressure-indicator/.
4. Vihtavuori, *Reloading Guide 2026*.
5. Empirical Precision, *User Guide*, linked from the app's dashboard, 2026, section 15.1, empiricalprecision.com.
6. Browning, *X-Bolt Rifle Owner's Manual*, safety rule 10, ammunition malfunction, browning.com/support/owners-manuals/x-bolt-rifle.html.
7. SAAMI, *Frequently Asked Questions*, What should I do if my firearm fails to fire when the trigger is pulled? saami.org/faqs/.
8. Browning, *X-Bolt Rifle Owner's Manual*; SAAMI, *Frequently Asked Questions*.
9. Alliant Powder, *Reloaders' Guide*; Vihtavuori, *Reloading Guide 2026*.
10. Centers for Disease Control and Prevention, *People at Increased Risk for Childhood Lead Poisoning*, 2026, cdc.gov/lead-prevention/risk-factors/index.html.
11. NIOSH, *NIOSH Pocket Guide to Chemical Hazards: Lead*, respirator recommendations, Centers for Disease Control and Prevention, cdc.gov/niosh/npg/npgd0368.html.
12. SAAMI, *Smokeless Powder*; Vihtavuori, *Reloading Guide 2026*; Alliant Powder, *Reloaders' Guide*.

Chapter 3. The Rifle as a System

1. Empirical Precision, *User Guide*, linked from the app's dashboard, 2026, section 4, empiricalprecision.com.
2. Lilja Precision Rifle Barrels, *The Making of a Rifle Barrel*, 2015, riflebarrels.com/the-making-of-a-rifle-barrel.
3. Lilja Precision Rifle Barrels, *The Making of a Rifle Barrel*; Krieger Barrels, *FAQ*, kriegerbarrels.com/faq.
4. Bryan Litz, *Modern Advancements in Long Range Shooting*, Volume II, Applied Ballistics Books, 2016; Cal Zant, "Best Custom Rifle Barrel: What The Pros Use," *Precision Rifle Blog*, author's reply in the comments, 20 December 2025, 2024, precisionrifleblog.com/2024/04/20/best-custom-rifle-barrel-what-the-pros-use/.
5. Krieger Barrels, *FAQ*.
6. Cal Zant, "Best Custom Rifle Barrel."
7. Eugene A. Avallone, Theodore Baumeister III and Ali M. Sadegh, eds., *Marks' Standard Handbook for Mechanical Engineers*, table of total emissivities: stainless steel type 316 cleaned 0.28, polished 0.13; flat black lacquer 0.92 to 0.96, McGraw-Hill, engineersedge.com/heat_transfer/emissivity.htm.
8. Theodore L. Bergman, Adrienne S. Lavine, Frank P. Incropera and David P. DeWitt, *Fundamentals of Heat and Mass Transfer*, 7th edition, chapters 7, 9 and 12 (flow across a cylinder, free convection, radiation), John Wiley & Sons, 2011.
9. Elya Courtney, Roy Couvillion, Amy Courtney and Michael Courtney, "Effects of Sound Suppressors on Muzzle Velocity, Bullet Yaw, and Drag," *Proceedings of the 30th International Symposium on Ballistics*, arXiv:1802.05748, 2017, arxiv.org/abs/1802.05748.
10. Philip H. Dater and Jason M. Wong, "Barrel Length Studies in 5.56mm NATO Weapons," *Small Arms Defense Journal*, first issued in 2010 as Effects of Barrel Length on Bore Pressure, Projectile Velocity and Sound Measurement, 2012, sadefensejournal.com/barrel-length-studies-in-5-56mm-nato-weapons/.
11. SilencerCo, *What Does Caliber Mean? The Real Suppressor Spec*, silencerco.com/blog/caliber-vs-psi-suppressors.
12. Bill Marr, "Do Rifle Crowns Matter? Does a Crown Affect Accuracy?" *Rifleshooter*, 2018, rifleshooter.com/2018/03/do-rifle-crowns-matter-does-a-crown-effect-accuracy/.
13. "The Effects of Crown Damage on a Rifle," *Accurate Reloading*, accuratereloading.com/crownr.html.
14. Jeff Johnston, "Will Damage to a Rifle's Crown Hamper Accuracy?" *Shooting Sports USA*, 2017, ssusa.org/content/will-damage-to-a-rifle-s-crown-hamper-accuracy/.
15. Elya Courtney, Roy Couvillion, Amy Courtney and Michael Courtney, "Effects of Sound Suppressors on Muzzle Velocity, Bullet Yaw, and Drag," the two-stage design's maker was one of the authors.
16. William Maxwell, "Do Muzzle Brakes Affect Group Size?" *MDT*, 2026, mdttac.com/blogs/read/do-muzzle-brakes-affect-group-size.

17. John W. Treakle, "Rifleman Q&A: Types of Rifling," *American Rifleman*, first printed May 2005, 2022, americanrifleman.org/content/rifleman-q-a-types-of-rifling.
18. "Lothar Walther's Woodall Explains Barrel-Making Methods," *AccurateShooter Daily Bulletin*, 2011, bulletin.accurateshooter.com/2011/06/lothar-walthers-woodall-explains-barrel-making-methods/.
19. Empirical Precision, *User Guide*, section 8.
20. Alliant Powder, *Reloaders' Guide*, 2023, p. 7, alliantpowder.com/resources/catalog/AP399_2023AlliantPowderReloadersGuide_SinglePgsNoCrops.pdf.
21. Empirical Precision, *User Guide*, section 15.1.
22. Empirical Precision, *User Guide*, section 11.

Chapter 4. How a Cartridge Works

1. SAAMI, *SAAMI Z299.4-2025: Voluntary Industry Performance Standards for Pressure and Velocity of Centerfire Rifle Ammunition for the Use of Commercial Manufacturers*, p. 227, saami.org/wp-content/uploads/2026/04/SAAMI-Z299.4-CFR-2025-Centerfire-Rifle-Approved-2-10-2025-2026-04-27.pdf.
2. SAAMI, *SAAMI Z299.4-2025*, pp. 112 and 225–226.
3. Empirical Precision, *User Guide*, linked from the app's dashboard, 2026, section 15.1, empiricalprecision.com.
4. Vihtavuori, *Reloading Guide 2026*, vihtavuori.com/wp-content/uploads/2026/04/Vihtavuori_Reloading_Guide_2026_ENG_web.pdf.
5. SAAMI, *SAAMI Z299.4-2025*, pp. 8, 202 and 241.
6. L. Elkarous, F. Coghe, M. Pirlot and J. C. Golinval, "Experimental techniques for ballistic pressure measurements and recent development in means of calibration," *Journal of Physics: Conference Series*, 459: 012048, 2013, iopscience.iop.org/article/10.1088/1742-6596/459/1/012048.
7. C.I.P., "Tables of Dimensions of Cartridges and Chambers (TDCC)," *C.I.P. homologation database*, list of TDCC, Tab I to Tab III, and the 308 Win. data sheet, bobp.cip-bobp.org/en/tdcc_public.
8. SAAMI, *SAAMI Z299.4-2025*; C.I.P., "Tables of Dimensions of Cartridges and Chambers (TDCC)."
9. SAAMI, *SAAMI Z299.4-2025*, pp. 12–13.
10. SAAMI, *SAAMI Z299.4-2025*, pp. 8–9.
11. SAAMI, *SAAMI Z299.4-2025*, p. 9.
12. SAAMI, *SAAMI Z299.4-2025*, p. 10.
13. SAAMI, *SAAMI Z299.4-2025*, pp. 11–28.
14. Hodgdon, *2025 Annual Manual*, 2024, p. 56.

Chapter 5. Presses and Dies

1. Lyman Products, *Rifle Neck Expanding M Dies*, product page, accessed 16 October 2026, lymanproducts.com/rifle-neck-expanding-m-dies.
2. Berger Bullets, *How to Load a Hybrid Bullet*, 2021, bergerbullets.com/shoot-better/shooting-knowledge/how-to-load-a-hybrid-bullet/.
3. Western Powders, *Handloading Guide 8.0*, 2020, hodgdonpowderco.com/wp-content/uploads/2023/04/WesternPowdersHandloadingGuide8.0_WEB-1.pdf.

Chapter 6. Case Cleaning Tools

1. NIOSH, *NIOSH Pocket Guide to Chemical Hazards: Lead*, respirator recommendations, Centers for Disease Control and Prevention, cdc.gov/niosh/npg/npgd0368.html.

Chapter 7. Case Preparation and Priming Tools

1. RCBS, *Reloading Military Brass Without the Headache*, 2026, rcbs.com/reloading-articles/reloading-military-brass-without-the-headache/.
2. Speer, *Reloading Education*, speer.com/reloading/reloading-education.html.
3. Vihtavuori, *Reloading Guide 2026*, vihtavuori.com/wp-content/uploads/2026/04/Vihtavuori_Reloading_Guide_2026_ENG_web.pdf.
4. Vihtavuori, *Reloading Guide 2026*, p. 14.

Chapter 8. Scales and Powder Measures

1. Western Powders, *Handloading Guide 8.0*, 2020, hodgdonpowderco.com/wp-content/uploads/2023/04/WesternPowdersHandloadingGuide8.0_WEB-1.pdf.

Chapter 9. Measuring Tools

1. Berger Bullets, *How to Load a Hybrid Bullet*, 2021, bergerbullets.com/shoot-better/shooting-knowledge/how-to-load-a-hybrid-bullet/; Bryan Litz, "Effects of COAL and CBTO, Part 2," *Berger Bullets Blog*, 2013, bergerbullets.com/effects-of-cartridge-over-all-length-coal-and-cartridge-base-to-ogive-cbto-part-2/.

Chapter 10. Range Equipment

1. Bryan Litz, *Measuring Muzzle Velocity*, chapter 15 of Modern Advancements in Long Range Shooting, Applied Ballistics, 2021, appliedballisticsllc.com/wp-content/uploads/2021/06/Measuring-Muzzle-Velocity.pdf.
2. Bill Marr, "Does the MagnetoSpeed V3 Chronograph Change Group Size and Point of Impact?" *RifleShooter*, 2018, rifleshooter.com/2018/03/does-the-magnetospeed-v3-chronograph-change-group-size-and-point-of-impact/.
3. "Saturday Movies: Garmin, LabRadar, Caldwell Compact Chronos," *AccurateShooter Daily Bulletin*, 2024, bulletin.accurateshooter.com/2024/06/saturday-movies-garmin-labradar-caldwell-compact-chronos/.
4. Jonathan Ocab, "Garmin Xero C1 Pro Chronograph Review," *OCABJ*, 2023, ocabj.net/garmin-xero-c1-pro-chronograph-review/.

Chapter 11. Brass

1. SAAMI, *SAAMI Z299.4-2025: Voluntary Industry Performance Standards for Pressure and Velocity of Centerfire Rifle Ammunition for the Use of Commercial Manufacturers*, cartridge and chamber drawings, saami.org/wp-content/uploads/2026/04/SAAMI-Z299.4-CFR-2025-Centerfire-Rifle-Approved-2-10-2025-2026-04-27.pdf; C.I.P., "Tables of Dimensions of Cartridges and Chambers (TDCC)," *C.I.P. homologation database*, list of TDCC, Tab I to Tab III, and the 308 Win. data sheet, bobp.cip-bobp.org/en/tdcc_public.
2. Empirical Precision, *User Guide*, linked from the app's dashboard, 2026, section 15.1, empiricalprecision.com.
3. Nosler, *Nosler Reloading Guide*, Number 9, 2021.
4. William L. Castleman, *Comparison of 223 Remington Brass for AR-15 Service Rifle*, first posted 2023, revised April 3, 2025, wlcastleman.com/equip/shoot/223bt/index.htm; ".243 Winchester Brass Weight and Capacity Tested," *AccurateShooter Daily Bulletin*, 2008, bulletin.accurateshooter.com/2008/09/243-winchester-brass-weight-and-capacity-tested/.

5. Hornady, "Let's Talk Load Development," *The Hornady Podcast*, episode 121, 2024, hornadymanufacturing.libsyn.com/ep-121-lets-talk-load-development.

Chapter 12. Primers

1. Western Powders, *Handloading Guide 8.0*, 2020, "Priming," hodgdonpowderco.com/wp-content/uploads/2023/04/WesternPowdersHandloadingGuide8.0_WEB-1.pdf.
2. CCI, *FAQ*, cci-ammunition.com/faq.html; SAAMI, *ANSI/SAAMI Z299.3: Voluntary Industry Performance Standards for Pressure and Velocity of Centerfire Pistol and Revolver Ammunition for the Use of Commercial Manufacturers*, 2015, p. 26, saami.org/wp-content/uploads/2018/01/205.pdf.
3. Empirical Precision, *User Guide*, linked from the app's dashboard, 2026, section 15.1, empiricalprecision.com.
4. Bryan Litz, *Modern Advancements in Long Range Shooting*, Volume II, Applied Ballistics Books, 2016; "Great Book: Modern Advancements in Long Range Shooting II," *AccurateShooter Daily Bulletin*, 2020, bulletin.accurateshooter.com/2020/09/great-book-modern-advancements-in-long-range-shooting-ii/.
5. Hornady, "Make Reloading Great Again: Does Primer Seating Depth and Type of Primer Matter?" *The Hornady Podcast*, episode 253, 2026, hornadymanufacturing.libsyn.com/ep-253-make-reloading-great-again-does-primer-seating-depth-and-type-of-primer-matter.
6. Sierra Bullets, "Reloading for Semi-Autos and Service Rifles," *Exterior Ballistics (exteriorballistics.com)*, page metadata dated 2003; archived 28 January 2019, web.archive.org/web/20190128180612/http://www.exteriorballistics.com/reloadbasics/gasgunreload.cfm; Glen Zediker, "Reloading for Semi-Automatic Rifles: Dos and Don'ts," *Shooting Illustrated*, 2019, shootingillustrated.com/articles/2019/6/23/reloading-for-semi-automatic-rifles-dos-and-donts; Springfield Armory, *M1A Operation and Safety Manual*, 2020, p. 5, springfield-armory.com/wp-content/uploads/M1A-Manual.pdf.
7. CCI, *CCI No. 34 and No. 41 Military Rifle Primers*, archived product page, 4 December 2010, http://web.archive.org/web/20101204153023/http://www.cci-ammunition.com/products/primers/primers.aspx?id=30.
8. CCI, "Primer Evolution," *CCI Education*, archived 17 December 2007; page since retired, http://web.archive.org/web/20071217025445/http://www.cci-ammunition.com:80/education/primer_evolution.aspx.
9. Sierra Bullets, "Priming," *Reload Basics*, archived 20 January 2025; page since retired, http://web.archive.org/web/20250120214944/https://www.sierrabullets.com/reload-basics/priming/; Springfield Armory, *M1A Operation and Safety Manual*, p. 5.
10. Vihtavuori, *Reloading Guide 2026*, p. 14, vihtavuori.com/wp-content/uploads/2026/04/Vihtavuori_Reloading_Guide_2026_ENG_web.pdf; Western Powders, *Handloading Guide 8.0*, "Primer Warnings."
11. Karl W. Kleimenhagen, "Chronographs and Pressure," *Karl's Soapbox*, 2006, http://kwk.us/chronographs.html.

Chapter 13. Powders

1. Empirical Precision, *User Guide*, linked from the app's dashboard, 2026, section 15.1, empiricalprecision.com.
2. Alliant Powder, *Reloaders' Guide*, 2023, p. 10, alliantpowder.com/resources/catalog/AP399_2023AlliantPowderReloadersGuide_SinglePgsNoCrops.pdf.
3. Vihtavuori, *Reloading Guide 2026*, p. 6, vihtavuori.com/wp-content/uploads/2026/04/Vihtavuori_Reloading_Guide_2026_ENG_web.pdf.
4. Vihtavuori, *Reloading Guide 2026*, p. 148.
5. SAAMI, *Smokeless Powder: Properties & Storage*, 2022, saami.org/wp-content/uploads/2025/08/Info-Doc-Smokeless-Powder-11-8-2022.pdf; Tenney L. Davis, *The Chemistry of Powder and Explosives*, John Wiley & Sons, 1943, pp. 329–330, archive.org/details/ChemistryOfPowderAndExplosives; St. Marks Powder, "Densified BALL POWDER Cased Telescoped Propelling Charge: LSAT Success," *NDIA Joint Armaments Conference*, 2012, slide 4, ndia.dtic.mil/wp-content/uploads/2012/armaments/Wednesday13627drummond.pdf.
6. Empirical Precision, *Component library*, powder records and published-load tables in the app, 2026, empiricalprecision.com.
7. Nosler, *Nosler Reloading Guide*, Number 9, 2021; Vihtavuori, *Reloading Guide 2026*.
8. Hodgdon, *2025 Annual Manual*, 2024.
9. Bryan Litz, *Modern Advancements in Long Range Shooting*, Volume II, Applied Ballistics Books, 2016; "Applied Ballistics: Rimfire Video, Fill Ratios, Plus 25% Off Sale," *AccurateShooter Daily Bulletin*, 2026, bulletin.accurateshooter.com/2026/03/applied-ballistics-rimfire-video-fill-ratios-plus-25-off-sale/.
10. Hodgdon, *2025 Annual Manual*, p. 81; Nosler, *223 Rem: 50/52/53 Grain*, load data, version 9.0, nosler.com/media/load_data_assets/pdfs/223-Rem-50gr-version-9-0.pdf; Nosler, *223 Rem: 55 Grain*, load data, version 9.0, nosler.com/media/load_data_assets/pdfs/223-Rem-55gr-version-9-0.pdf.
11. Western Powders, *Handloading Guide 8.0*, 2020, hodgdonpowderco.com/wp-content/uploads/2023/04/WesternPowdersHandloadingGuide8.0_WEB-1.pdf.
12. Vihtavuori, *Reloading Guide 2026*; Hodgdon, *2025 Annual Manual*.
13. Vihtavuori, *Reloading Guide 2026*.
14. Cal Zant, "Powder Temperature Sensitivity: The Hidden Factor Affecting Your Long-Range Accuracy," *Precision Rifle Blog*, 2025, precisionrifleblog.com/2025/03/08/powder-temperature-sensitivity/.
15. Cal Zant, "Powder Temp Stability: Hodgdon Extreme vs. IMR Enduron," *Precision Rifle Blog*, 2016, precisionrifleblog.com/2016/06/19/powder-temp-stability-hodgdon-extreme-vs-imr-enduron/.
16. Alliant Powder, *Reloaders' Guide*.
17. SAAMI, *Smokeless Powder*.
18. Vihtavuori, *How to Store Reloading Powders*, vihtavuori.com/resources/education/how-to-store-powders/.
19. Bryan Litz, *Modern Advancements in Long Range Shooting*, Volume III, Applied Ballistics Books, 2022; Cal Zant, "Powder Temperature Sensitivity."

Chapter 14. Bullets

1. Hornady, *CX Bullets*, hornady.com/bullets/cx; Barnes Bullets, *FAQs*, barnesbullets.com/faqs.
2. Empirical Precision, *User Guide*, linked from the app's dashboard, 2026, section 15.1, empiricalprecision.com.
3. Barnes Bullets, *FAQs*.
4. Barnes Bullets, *Load Data*, barnesbullets.com/load-data/.
5. Bryan Litz, "Effects of COAL and CBTO, Part 2," *Berger Bullets Blog*, 2013, bergerbullets.com/effects-of-cartridge-over-all-length-coal-and-cartridge-base-to-ogive-cbto-part-2/.

Chapter 15. Reading Published Load Data

1. Empirical Precision, *User Guide*, linked from the app's dashboard, 2026, section 4, empiricalprecision.com.
2. Vihtavuori, *Reloading Guide 2026*, vihtavuori.com/wp-content/uploads/2026/04/Vihtavuori_Reloading_Guide_2026_ENG_web.pdf.
3. Alliant Powder, *Reloaders' Guide*, 2023, alliantpowder.com/resources/catalog/AP399_2023AlliantPowderReloadersGuide_SinglePgsNoCrops.pdf; Vihtavuori, *Reloading Guide 2026*.
4. Western Powders, *Handloading Guide 8.0*, 2020, p. 20, hodgdonpowderco.com/wp-content/uploads/2023/04/WesternPowdersHandloadingGuide8.0_WEB-1.pdf; Vihtavuori, *Reloading Guide 2026*, p. 9.

Chapter 16. Planning the Load

1. Empirical Precision, *User Guide*, linked from the app's dashboard, 2026, section 15.1, empiricalprecision.com.
2. H. G. Broemel, *QuickLOAD Version 3.8: Interior Ballistics Program for Experienced Handloaders*, 2013, hunting-sport.com/mediafiles/Sonstiges/Bedienungsanleitungen/quickload-3.8_info.pdf; "Safety Notes & Warnings," *Gordon's Reloading Tool documentation*, grtools.de/doku.php?id=grtools:en:doku:safetynotes.
3. Empirical Precision, *User Guide*, section 8.
4. Western Powders, *Handloading Guide 8.0*, 2020, hodgdonpowderco.com/wp-content/uploads/2023/04/WesternPowdersHandloadingGuide8.0_WEB-1.pdf.
5. Nosler, "The 280 Ackley Improved – Which Version Do I Have, and Is It OK to Shoot with Factory Ammo?" *Nosler FAQ*, 2013, web.archive.org/web/20211019073124/https://faq.nosler.com/index.php?action=artikel&cat=32&id=39&artlang=en.
6. SAAMI, *SAAMI Z299.4-2025: Voluntary Industry Performance Standards for Pressure and Velocity of Centerfire Rifle Ammunition for the Use of Commercial Manufacturers*, pp. 19–20, saami.org/wp-content/uploads/2026/04/SAAMI-Z299.4-CFR-2025-Centerfire-Rifle-Approved-2-10-2025-2026-04-27.pdf; ".280 Ackley Improved," *Wikipedia*, en.wikipedia.org/wiki/.280_Ackley_Improved.
7. Barnes Bullets, *Load Data*, barnesbullets.com/load-data/; Nosler, *280 Ackley Improved Load Data*, nosler.com/280-ackley-improved; Sierra Bullets, *Rifle and Handgun Reloading Manual*, 6th edition, 2020, p. 553.
8. Barnes Bullets, *Load Data*; Western Powders, *Handloading Guide 8.0*, p. 59.
9. "Chambering for Ackley Cartridges," *P.O. Ackley*, 2017, ackleyimproved.com/chambering-for-ackley-cartridges/; "Chambering a Rifle for an Ackley Improved Cartridge," *RifleShooter*, 2014, rifleshooter.com/2014/01/chambering-a-rifle-for-an-ackley-improved-cartridge/.
10. Gunwerks, "Wildcatting Long Range Cartridges," *Gunwerks blog*, 2016, gunwerks.com/blog/blog-2/wildcatting-long-range-cartridges-21.
11. Hodgdon, *FAQ*, hodgdonpowderco.com/faq/.
12. "Developing Initial Wildcat Charge Weight," *AccurateShooter Forum*, forum.accurateshooter.com/threads/developing-initial-wildcat-charge-weight.4055888/.
13. Karl W. Kleimenhagen, "Chronographs and Pressure," *Karl's Soapbox*, 2006, http://kwk.us/chronographs.html.
14. "Safety Notes & Warnings."
15. SAAMI, *SAAMI Z299.4-2025*, pp. 8 and 242.
16. The Birmingham Proof House, *Proof House Services*, gunproof.com/proof-house-services; Karl W. Kleimenhagen, "Cartridge Pressure Standards," *Karl's Soapbox*, 2023, http://kwk.us/pressures.html.

Chapter 17. The Workshop and the Order of Operations

1. Fred Zeglin, "Experimenting with Bolt Thrust," *Gun Digest*, 2017, gundigest.com/gear-ammo/ammunition/experimenting-with-bolt-thrust.

Chapter 18. Inspecting and Cleaning Cases

1. Western Powders, *Handloading Guide 8.0*, 2020, p. 6, hodgdonpowderco.com/wp-content/uploads/2023/04/WesternPowdersHandloadingGuide8.0_WEB-1.pdf.
2. Copper Development Association, *The Brasses: Properties and Applications*, Publication 117, revised 2005, p. 48, copperalliance.org.uk/resource-library/pub-117---the-brasses/.
3. NIOSH, *NIOSH Pocket Guide to Chemical Hazards: Lead*, respirator recommendations, Centers for Disease Control and Prevention, cdc.gov/niosh/npg/npgd0368.html.
4. Western Powders, *Handloading Guide 8.0*, p. 16.
5. Hornady, "Make Reloading Great Again: The Science of Headspace," *The Hornady Podcast*, episode 218, 2026, hornadymanufacturing.libsyn.com/ep-218-make-reloading-great-again-the-science-of-headspace.
6. Western Powders, *Handloading Guide 8.0*, p. 5.

Chapter 19. Sizing and Shoulder Bump

1. Sierra Bullets, "224 Weatherby Magnum," *Sierra Reloading Manual, sixth edition, online load data*, sierrabullets.com/content/load-data/legacy/224-5.69mm/224-weatherby-magnum.pdf; Sierra Bullets, *Rifle and Handgun Reloading Manual*, 6th edition, 2020, p. 745; Philip Massaro, "Belted Magnum Cases: A Myth Dispelled," *Gun Digest*, 2014, gundigest.com/more/how-to/belted-magnum-cases-myth-dispelled.
2. Cal Zant, "How Do the Best Shooters Reload? What the Pros Use," *Precision Rifle Blog*, 2024, precisionrifleblog.com/2024/11/10/how-do-the-best-shooters-reload/.
3. Western Powders, *Handloading Guide 8.0*, 2020, p. 16, hodgdonpowderco.com/wp-content/uploads/2023/04/WesternPowdersHandloadingGuide8.0_WEB-1.pdf.
4. Western Powders, *Handloading Guide 8.0*, p. 6.
5. Hornady, "Let's Talk Annealing," *The Hornady Podcast*, episode 136, 2024, hornadymanufacturing.libsyn.com/ep-136-lets-talk-annealing; Hornady, "Make Reloading Great Again: The Science of Headspace," *The Hornady Podcast*, episode 218, 2026, hornadymanufacturing.libsyn.com/ep-218-make-reloading-great-again-the-science-of-headspace; "How to Set Up Full-Length Sizing Dies and Control Shoulder Bump," *AccurateShooter Daily Bulletin*, 2016, bulletin.accurateshooter.com/2016/11/how-to-set-up-full-length-sizing-dies-and-control-shoulder-bump/.
6. Hornady, "Make Reloading Great Again."
7. Bryan Litz, *Modern Advancements in Long Range Shooting*, Volume II, Applied Ballistics Books, 2016; Applied Ballistics, "Case Neck Tension," *The Science of Accuracy*, episode 23, replies by Bryan Litz in the comments, archived copy, 2022, web.archive.org/web/20241212180151/https://thescienceofaccuracy.com/podcast/23-case-neck-tension/.
8. Gavin Gear, "Redding Mandrels vs. No Mandrels: The Data Doesn't Lie!" *Ultimate Reloader*, 2026,

ultimatereloader.com/2026/02/18/redding-mandrels-vs-no-mandrels-the-data-doesnt-lie/.

Chapter 20. Trimming and Chamfering

1. Western Powders, *Handloading Guide 8.0*, 2020, p. 7, hodgdonpowderco.com/wp-content/uploads/2023/04/WesternPowdersHandloadingGuide8.0_WEB-1.pdf.
2. Western Powders, *Handloading Guide 8.0*, p. 4.
3. Cal Zant, "How Do the Best Shooters Reload? What the Pros Use," *Precision Rifle Blog*, 2024, precisionrifleblog.com/2024/11/10/how-do-the-best-shooters-reload/.
4. Western Powders, *Handloading Guide 8.0*, p. 17.
5. Lyman Products, *Rifle Neck Expanding M Dies*, product page, accessed 16 October 2026, lymanproducts.com/rifle-neck-expanding-m-dies.

Chapter 21. Annealing

1. Cal Zant, "How Do the Best Shooters Reload? What the Pros Use," *Precision Rifle Blog*, 2024, precisionrifleblog.com/2024/11/10/how-do-the-best-shooters-reload/.
2. Enterprise Services LLC, "Tempilaq 750 Heat Indicating Liquid," *Anneal-Rite*, 2022, cartridgeanneal.com/tempilaq/; John Barsness, "Annealing Rifle Brass," *Handloader*, June/July 2017, handloadermagazine.com/annealing-rifle-brass.
3. Enterprise Services LLC, "Tempilaq 750 Heat Indicating Liquid."
4. G. Chambers, "Annealing Temperatures for Reloading Brass Cartridge Cases," *Ballistic Recreations, Annealing Knowledge Centre*, Test Procedure, 2021, ballisticrecreations.ca/salt_home_legacy/annealing-knowledge-centre/annealing-temperatures-for-reloading-brass-cartridge-cases/.
5. AMP Annealing, *Mark II Instruction Guide*, ampannealing.com/instructions/; John Barsness, "Annealing Rifle Brass."
6. Alex Findlay and Matt Findlay, "Annealing Under the Microscope, Part 4," *AMP Annealing*, 2019, ampannealing.com/articles/55/annealing-under-the-microscope/.
7. Mitch Campana, "Reloading Brass Life," *RCBS Reloading Articles*, 2026, rcbs.com/reloading-articles/reloading-brass-life/; Hornady, *Case Neck Annealing Kit Product Instructions*, static.hornady.media/presscenter/docs/1410993058-Case-Neck-Annealing-Kit-Instructions.pdf.
8. Hornady, "Let's Talk Annealing," *The Hornady Podcast*, episode 136, 2024, hornadymanufacturing.libsyn.com/ep-136-lets-talk-annealing; John Masek, "Annealing Torture Test: Does Annealing Multiple Times Matter?" *Ultimate Reloader*, 2025, ultimatereloader.com/2025/07/16/annealing-torture-test-does-annealing-multiple-times-matter/.

Chapter 22. Primer Pockets and Priming

1. Western Powders, *Handloading Guide 8.0*, 2020, hodgdonpowderco.com/wp-content/uploads/2023/04/WesternPowdersHandloadingGuide8.0_WEB-1.pdf.
2. Western Powders, *Handloading Guide 8.0*; Alliant Powder, *Reloaders' Guide*, 2023, alliantpowder.com/resources/catalog/AP399_2023AlliantPowderReloadersGuide_SinglePgsNoCrops.pdf.
3. Western Powders, *Handloading Guide 8.0*; Vihtavuori, *Reloading Guide 2026*, vihtavuori.com/wp-content/uploads/2026/04/Vihtavuori_Reloading_Guide_2026_ENG_web.pdf.
4. RCBS, *Reloading Military Brass Without the Headache*, 2026, rcbs.com/reloading-articles/reloading-military-brass-without-the-headache/.
5. Alliant Powder, *Reloaders' Guide*.
6. Bryan Litz, *Modern Advancements in Long Range Shooting*, Volume II, Applied Ballistics Books, 2016; RCBS, *Flash Hole Deburring: Is It Worth It?* 2026, rcbs.com/reloading-articles/flash-hole-deburring-is-it-worth-it/.
7. Hornady, "Let's Talk Load Development," *The Hornady Podcast*, episode 121, 2024, hornadymanufacturing.libsyn.com/ep-121-lets-talk-load-development.
8. Karl W. Kleimenhagen, "Chronographs and Pressure," *Karl's Soapbox*, 2006, http://kwk.us/chronographs.html.
9. Speer, *Reloading Education*, speer.com/reloading/reloading-education.html.
10. Vihtavuori, *Reloading Guide 2026*.
11. CCI, "Primer Evolution," *CCI Education*, archived 17 December 2007; page since retired, http://web.archive.org/web/20071217025445/http://www.cci-ammunition.com:80/education/primer_evolution.aspx.
12. SAAMI, *SAAMI Z299.4-2025: Voluntary Industry Performance Standards for Pressure and Velocity of Centerfire Rifle Ammunition for the Use of Commercial Manufacturers*, p. 30, saami.org/wp-content/uploads/2026/04/SAAMI-Z299.4-CFR-2025-Centerfire-Rifle-Approved-2-10-2025-2026-04-27.pdf.
13. Sierra Bullets, "Priming," *Reload Basics*, archived 20 January 2025; page since retired, http://web.archive.org/web/20250120214944/https://www.sierrabullets.com/reload-basics/priming/.

Chapter 23. Charging

1. Western Powders, *Handloading Guide 8.0*, 2020, hodgdonpowderco.com/wp-content/uploads/2023/04/WesternPowdersHandloadingGuide8.0_WEB-1.pdf.
2. Speer, *Reloading Education*, speer.com/reloading/reloading-education.html.
3. Bryan Litz, *Modern Advancements in Long Range Shooting*, Volume II, Applied Ballistics Books, 2016; Applied Ballistics, "Powder Measurement," *The Science of Accuracy*, episode 21, archived copy, 2022, web.archive.org/web/20241212165733/https://thescienceofaccuracy.com/podcast/21-powder-measurement/; Cal Zant, "Best Powder Scale: What The Pros Use," *Precision Rifle Blog*, 2024, precisionrifleblog.com/2024/11/01/best-powder-scale/.
4. Applied Ballistics, "Powder Measurement"; Bryan Litz, "Making Low SD," *Bryan Litz Ballistics*, YouTube video, 2025, youtube.com/shorts/CYrSKKGLxes.
5. Bryan Litz, *Measuring Muzzle Velocity*, chapter 15 of Modern Advancements in Long Range Shooting, Applied Ballistics, 2021, appliedballisticsllc.com/wp-content/uploads/2021/06/Measuring-Muzzle-Velocity.pdf.
6. Alliant Powder, *Reloaders' Guide*, 2023, alliantpowder.com/resources/catalog/AP399_2023AlliantPowderReloadersGuide_SinglePgsNoCrops.pdf; Vihtavuori, *Reloading Guide 2026*, vihtavuori.com/wp-content/uploads/2026/04/Vihtavuori_Reloading_Guide_2026_ENG_web.pdf.
7. Western Powders, *Handloading Guide 8.0*; Alliant Powder, *Reloaders' Guide*.

Chapter 24. Seating

1. Empirical Precision, *User Guide*, linked from the app's dashboard, 2026, section 15.1, empiricalprecision.com.

Notes

2. Berger Bullets, *How to Load a Hybrid Bullet*, 2021, bergerbullets.com/shoot-better/shooting-knowledge/how-to-load-a-hybrid-bullet/.
3. Cal Zant, "How Fast Does a Barrel Erode?" *Precision Rifle Blog*, 2020, precisionrifleblog.com/2020/03/24/how-fast-does-a-barrel-wear/.
4. Western Powders, *Handloading Guide 8.0*, 2020, hodgdonpowderco.com/wp-content/uploads/2023/04/WesternPowdersHandloadingGuide8.0_WEB-1.pdf.
5. Barnes Bullets, *Load Data*, barnesbullets.com/load-data/.
6. Western Powders, *Handloading Guide 8.0*; Speer, *Reloading Education*, speer.com/reloading/reloading-education.html.
7. Speer, *Reloading Education*.
8. Hornady, "Let's Talk Load Development," *The Hornady Podcast*, episode 121, 2024, hornadymanufacturing.libsyn.com/ep-121-lets-talk-load-development.
9. Barnes Bullets, *FAQ*, archived copy of 27 January 2016, http://web.archive.org/web/20160127035353/http://barnesbullets.com/faq/; Barnes Bullets, "April 2007 Barnes Bullet-n," *Barnes Bullets newsletter*, archived copy, http://web.archive.org/web/20101201062453/http://www.barnesbullets.com/resources/newsletters/april-2007-barnes-bullet-n/; Nosler, *2021 Product Guide*, p. 16, nosler.com/media/catalog/2021_Nosler_Product_Guide.pdf.
10. Barnes Bullets, "April 2007 Barnes Bullet-n"; Lee Precision, "When Do I Need to Use a Factory Crimp Die?" *Lee Precision Support Portal*, 2019, support.leeprecision.net/en/knowledgebase/article/when-do-i-need-to-use-a-factory-crimp-die; Sturm, Ruger & Co., *Instruction Manual for Ruger Mini-14 Ranch and Mini Thirty Rifles*, 2026, p. 26, ruger-docs.s3.amazonaws.com/_manuals/mini.pdf.

Chapter 25. Finishing, Labeling and Storage

1. Western Powders, *Handloading Guide 8.0*, 2020, hodgdonpowderco.com/wp-content/uploads/2023/04/WesternPowdersHandloadingGuide8.0_WEB-1.pdf.
2. Alliant Powder, *Reloaders' Guide*, 2023, alliantpowder.com/resources/catalog/AP399_2023AlliantPowderReloadersGuide_SinglePgsNoCrops.pdf.
3. Western Powders, *Handloading Guide 8.0*; Alliant Powder, *Reloaders' Guide*.
4. "Effects of Humidity on Powder Performance," *AccurateShooter Daily Bulletin*, 2025, bulletin.accurateshooter.com/2025/01/effects-of-humidity-on-powder-performance-podcast-info-2/.
5. Western Powders, *Handloading Guide 8.0*; Vihtavuori, *Reloading Guide 2026*, vihtavuori.com/wp-content/uploads/2026/04/Vihtavuori_Reloading_Guide_2026_ENG_web.pdf.
6. Empirical Precision, *User Guide*, linked from the app's dashboard, 2026, section 15.1, empiricalprecision.com.

Chapter 26. Loading for Semi-Automatic Rifles

1. Colt Defense, *Operator's Manual for Colt Advanced Law Enforcement Carbines*, LE6940 series, 2010, p. 11, colt.com/wp-content/uploads/2023/02/LE6940ColtAdvancedLawEnforcementCarbineManual.pdf; Sturm, Ruger & Co., *Instruction Manual for Ruger Mini-14 Ranch and Mini Thirty Rifles*, 2026, p. 28, ruger-docs.s3.amazonaws.com/_manuals/mini.pdf; Glen Zediker, "Reloading for Semi-Automatic Rifles: Dos and Don'ts," *Shooting Illustrated*, 2019, shootingillustrated.com/articles/2019/6/23/reloading-for-semi-automatic-rifles-dos-and-donts.
2. Springfield Armory, *M1A Operation and Safety Manual*, 2020, p. 15, springfield-armory.com/wp-content/uploads/M1A-Manual.pdf; Glen Zediker, "Reloading for Semi-Automatic Rifles."
3. Colt Defense, *Operator's Manual for Colt Advanced Law Enforcement Carbines*, p. 4; Duane Siercks, "Reloading 101: Case Diagnostics Part II," *Sierra Bullets blog*, 2016, sierrabullets.wordpress.com/2016/03/09/reloading-101-case-diagnostics-part-ii/.
4. Springfield Armory, *M1A Operation and Safety Manual*, p. 15; Colt Defense, *Operator's Manual for Colt Advanced Law Enforcement Carbines*, p. 54; Glen Zediker, "Reloading for Semi-Automatic Rifles."
5. Sturm, Ruger & Co., *Instruction Manual for Ruger Mini-14 Ranch and Mini Thirty Rifles*, p. 24; Sierra Bullets, *Rifle and Handgun Reloading Manual*, 6th edition, 2020, p. 668; Glen Zediker, "Reloading for Semi-Automatic Rifles."
6. Duane Siercks, "Reloading 101"; Richard Mann, "Case-Head Swipe," *Shooting Illustrated*, 2011, shootingillustrated.com/articles/2011/4/12/case-head-swipe.
7. Western Powders, *Handloading Guide 8.0*, 2020, hodgdonpowderco.com/wp-content/uploads/2023/04/WesternPowdersHandloadingGuide8.0_WEB-1.pdf.
8. Empirical Precision, *User Guide*, linked from the app's dashboard, 2026, section 15.1, empiricalprecision.com.
9. "How to Set Up Full-Length Sizing Dies and Control Shoulder Bump," *AccurateShooter Daily Bulletin*, 2016, bulletin.accurateshooter.com/2016/11/how-to-set-up-full-length-sizing-dies-and-control-shoulder-bump/; Hornady, "Let's Talk Annealing," *The Hornady Podcast*, episode 136, 2024, hornadymanufacturing.libsyn.com/ep-136-lets-talk-annealing.
10. RCBS, *FAQ*, rcbs.com/faq/; Glen Zediker, "Reloading for Semi-Automatic Rifles."
11. Lee Precision, "Classic Lee Loaders for Semi Auto, Slide and Lever Action Rifles," *Lee Precision Support Portal*, 2018, support.leeprecision.net/en/knowledgebase/article/classic-lee-loaders-for-semi-auto-slide-and-lever-action-rifles; Glen Zediker, "Reloading for Semi-Automatic Rifles."
12. SAAMI, *SAAMI Glossary*, "Floating Firing Pin," saami.org/saami-glossary/; CCI, *CCI No. 34 and No. 41 Military Rifle Primers*, archived product page, 4 December 2010, http://web.archive.org/web/20101204153023/http://www.cci-ammunition.com/products/primers/primers.aspx?id=30.
13. Springfield Armory, *M1A Operation and Safety Manual*, p. 5; Colt Defense, *Operator's Manual for Colt Advanced Law Enforcement Carbines*, p. 54; Glen Zediker, "Reloading for Semi-Automatic Rifles."
14. SAAMI, *SAAMI Glossary*, "Out-of-Battery"; Sierra Bullets, "Reloading for Semi-Autos and Service Rifles," *Exterior Ballistics (exteriorballistics.com)*, page metadata dated 2003; archived 28 January 2019, web.archive.org/web/20190128180612/http://www.exteriorballistics.com/reloadbasics/gasgunreload.cfm; Wayne Faatz, "M1 Garand Slam-Fires: Potential Causes & Solutions," *American Rifleman*, first published October 1983 as "The Mysterious Slam-Fire in the M1 Garand," 2020, americanrifleman.org/content/m1-garand-slam-fires-potential-causes-solutions/.
15. Wayne Faatz, "M1 Garand Slam-Fires"; Springfield Armory, *M1A Operation and Safety Manual*, p. 15.

16. CCI, *CCI No. 34 and No. 41 Military Rifle Primers*; Federal Premium, *Gold Medal AR Centerfire Primer, Small Rifle AR Match*, product page, part GM205MAR, federalpremium.com/reloading/primers/gold-medal-ar-centerfire-primer/11-GM205MAR.html; Sierra Bullets, "Reloading for Semi-Autos and Service Rifles"; Glen Zediker, "Reloading for Semi-Automatic Rifles"; Springfield Armory, *M1A Operation and Safety Manual*, p. 5.
17. CCI, *CCI No. 34 and No. 41 Military Rifle Primers*.
18. Colt Defense, *Operator's Manual for Colt Advanced Law Enforcement Carbines*, p. 54; Springfield Armory, *M1A Operation and Safety Manual*, p. 5; Glen Zediker, "Reloading for Semi-Automatic Rifles."
19. Western Powders, *Handloading Guide 8.0*; Speer, *Reloading Education*, speer.com/reloading/reloading-education.html.
20. Springfield Armory, *M1A Operation and Safety Manual*, p. 15; Sturm, Ruger & Co., *Instruction Manual for Ruger Mini-14 Ranch and Mini Thirty Rifles*, p. 26; Colt Defense, *Operator's Manual for Colt Advanced Law Enforcement Carbines*, p. 9.
21. Sierra Bullets, "Reloading for Semi-Autos and Service Rifles"; Wayne Faatz, "M1 Garand Slam-Fires."
22. Glen Zediker, "Reloading for Semi-Automatic Rifles"; RCBS, *Small Base Taper Crimp Die Set, AR Series*, shop.rcbs.com/small-base-taper-crimp-die-set-ar-series/.
23. Sturm, Ruger & Co., *Instruction Manual for Ruger Mini-14 Ranch and Mini Thirty Rifles*, p. 26; Barnes Bullets, "April 2007 Barnes Bullet-n," *Barnes Bullets newsletter*, archived copy, http://web.archive.org/web/20101201062453/http://www.barnesbullets.com/resources/newsletters/april-2007-barnes-bullet-n/; Lee Precision, "When Do I Need to Use a Factory Crimp Die?" *Lee Precision Support Portal*, 2019, support.leeprecision.net/en/knowledgebase/article/when-do-i-need-to-use-a-factory-crimp-die.
24. Hornady, *The Anatomy of a Hornady Bullet*, hornady.com/bullets/the-anatomy-of-a-hornady-bullet.
25. Sturm, Ruger & Co., *Instruction Manual for Ruger Mini-14 Ranch and Mini Thirty Rifles*, p. 26.
26. Sturm, Ruger & Co., *Instruction Manual for Ruger Mini-14 Ranch and Mini Thirty Rifles*, p. 28; Colt Defense, *Operator's Manual for Colt Advanced Law Enforcement Carbines*, p. 53.
27. Springfield Armory, *M1A Operation and Safety Manual*, p. 8; Colt Defense, *Operator's Manual for Colt Advanced Law Enforcement Carbines*, p. 51.
28. Colt Defense, *Operator's Manual for Colt Advanced Law Enforcement Carbines*, p. 54.
29. Richard Mann, "Case-Head Swipe"; Glen Zediker, "Reloading for Semi-Automatic Rifles."
30. Glen Zediker, "Reloading for Semi-Automatic Rifles"; Richard Mann, "Case-Head Swipe."
31. Glen Zediker, "Reloading for Semi-Automatic Rifles"; Sierra Bullets, *Rifle and Handgun Reloading Manual*, p. 668; Robert Treece, "Thoughts for Load Development in .30 Caliber Gas Guns," *Sierra Bullets blog*, 2013, sierrabullets.wordpress.com/2013/04/29/thoughts-for-load-development-in-30-caliber-gas-guns/.
32. Sierra Bullets, *Rifle and Handgun Reloading Manual*, p. 618; Sturm, Ruger & Co., *Instruction Manual for Ruger Mini-14 Ranch and Mini Thirty Rifles*, p. 15.
33. Hornady, "6mm ARC (Gas Gun)," *Hornady load data*, static.hornady.media/site/hornady/files/load-data/6mm-arc-gas-58-105gr-data.pdf.
34. Hornady, "6mm ARC (Bolt Gun)," *Hornady load data*, static.hornady.media/site/hornady/files/load-data/6mm-arc-bolt.pdf; Hornady, *Hornady Handbook of Cartridge Reloading*, 12th edition, 2025; Gavin Gear, "NEW: Hornady 12th Edition Reloading Manual," *Ultimate Reloader*, 2025, ultimatereloader.com/2025/12/13/new-hornady-12th-edition-reloading-manual/.
35. Richard Mann, "Case-Head Swipe."
36. Richard Mann, "Case-Head Swipe"; Duane Siercks, "Reloading 101"; Glen Zediker, "Reloading for Semi-Automatic Rifles."

Chapter 28. Working Up Safely

1. Karl W. Kleimenhagen, "Chronographs and Pressure," *Karl's Soapbox*, 2006, http://kwk.us/chronographs.html.
2. Hornady, "Increased Velocity Doesn't Come Without a Price," *Hornady blog*, hornady.com/blog/increased-velocity-doesn-t-come-without-a-price.
3. Western Powders, *Handloading Guide 8.0*, 2020, Example 22, hodgdonpowderco.com/wp-content/uploads/2023/04/WesternPowdersHandloadingGuide8.0_WEB-1.pdf; Richard Mann, "Ballistics 101," *Shooting Illustrated*, 2023, shootingillustrated.com/content/ballistics-101/.
4. Duane Siercks, "Reloading 101: Case Diagnostics Part II," *Sierra Bullets blog*, 2016, sierrabullets.wordpress.com/2016/03/09/reloading-101-case-diagnostics-part-ii/; Hodgdon, *2025 Annual Manual*, 2024, "The Versatile 257 Roberts," pp. 23–24.
5. Richard Mann, "Ballistics 101."
6. "Case Head Expansion," *24hourcampfire*, 2009, 24hourcampfire.com/ubbthreads/ubbthreads.php/ubb/printthread/Board/11/main/266589/type/thread.
7. Julian S. Hatcher, *Hatcher's Notebook*, 3rd edition, Stackpole Books, 1962; John Barsness, "The Least Reliable 'Pressure Indicator'," *Rifles and Recipes*, excerpt from The Big Book of Gun Gack III, chapter 30, 2022, riflesandrecipes.com/ammunition/the-least-reliable-pressure-indicator/.
8. Western Powders, *Handloading Guide 8.0*, Example 23.
9. Philip P. Massaro, "Cartridge Pressure: Are You Pushing the Limits Too Far?" *Gun Digest*, excerpt from ABC's of Reloading, 10th edition, 2021, gundigest.com/gear-ammo/reloading/cartridge-pressure-are-you-pushing-the-limits-too-far.
10. Vihtavuori, *Reloading Guide 2026*, vihtavuori.com/wp-content/uploads/2026/04/Vihtavuori_Reloading_Guide_2026_ENG_web.pdf.
11. Karl W. Kleimenhagen, "Chronographs and Pressure"; Vihtavuori, *Reloading Guide 2026*.
12. Empirical Precision, *User Guide*, linked from the app's dashboard, 2026, section 15.1, empiricalprecision.com.
13. Barnes Bullets, *Load Data*, barnesbullets.com/load-data/.

Chapter 29. Popular Methods Examined

1. Bryan Litz, *Modern Advancements in Long Range Shooting*, Volume III, Applied Ballistics Books, 2022; Cal Zant, "Creighton Audette's Ladder Test," *Precision Rifle Blog*, 2012, comments, 2 February 2025, precisionrifleblog.com/2012/07/13/creighton-audette-ladder-testing/.
2. Hornady, "Your Groups Are Too Small: Sample Size," *The Hornady Podcast*, episode 50, 2022, hornadymanufacturing.libsyn.com/ep-050-your-groups-are-too-small-sample-size; Hornady, "Let's Talk Load Development," *The Hornady Podcast*, episode 121, 2024,

hornadymanufacturing.libsyn.com/ep-121-lets-talk-load-development.
3. Tyler Freel, "Rifle Nodes: How You've Been Wasting Your Time and Money on Load Development," *Outdoor Life*, 2024, outdoorlife.com/guns/rifle-nodes/.
4. Hornady, "Let's Talk Load Development"; Tyler Freel, "Rifle Nodes."
5. Hornady, "Your Groups Are Too Small"; Hornady, "Let's Talk Load Development"; Tyler Freel, "Rifle Nodes."
6. Berger Bullets, *VLD – Making It Shoot*, 2014, bergerbullets.com/vld-making-shoot/.
7. Berger Bullets, *How to Load a Hybrid Bullet*, 2021, bergerbullets.com/shoot-better/shooting-knowledge/how-to-load-a-hybrid-bullet/.
8. Barnes Bullets, *Load Data*, barnesbullets.com/load-data/.
9. Hornady, "Let's Talk Load Development."
10. Applied Ballistics, "#82 – Barrel Tuning with Erik Cortina," *The Science of Accuracy*, episode 82, 2023, web.archive.org/web/20251217122932/https://thescienceofaccuracy.com/podcast/82-barrel-tuning-with-erik-cortina/.
11. Cal Zant, "Sneak Peek of Bryan Litz's New Book: Volume III of Modern Advancements in Long Range Shooting," *Precision Rifle Blog*, 2022, precisionrifleblog.com/2022/08/14/sneak-peek-of-bryan-litzs-new-book-volume-iii-of-modern-advancements-in-long-range-shooting/.
12. Bryan Litz, *Modern Advancements in Long Range Shooting*, chapter 4.
13. Applied Ballistics, "Barrel Tuner Testing," *The Science of Accuracy*, episode 55, replies by Bryan Litz in the comments, archived copy, 2022, web.archive.org/web/20260120155228/https://thescienceofaccuracy.com/podcast/55-barrel-tuner-testing/; Applied Ballistics, "#82 – Barrel Tuning with Erik Cortina."
14. Applied Ballistics, "Barrel Tuner Testing."

Chapter 30. Living With a Load

1. Cal Zant, "Powder Temperature Sensitivity: The Hidden Factor Affecting Your Long-Range Accuracy," *Precision Rifle Blog*, 2025, precisionrifleblog.com/2025/03/08/powder-temperature-sensitivity/.
2. Karl W. Kleimenhagen, "Chronographs and Pressure," *Karl's Soapbox*, 2006, http://kwk.us/chronographs.html.
3. "Velocity Increase in New Gun Barrels," *AccurateShooter Daily Bulletin*, reprints a Sierra Bullets blog article by Mark Walker, 2018, bulletin.accurateshooter.com/2018/06/tech-tip-velocity-increase-in-new-gun-barrels/.
4. Cal Zant, "How Fast Does a Barrel Erode?" *Precision Rifle Blog*, 2020, precisionrifleblog.com/2020/03/24/how-fast-does-a-barrel-wear/; Lilja Precision Rifle Barrels, *Frequently Asked Questions*, riflebarrels.com/support/faq/.

Chapter 31. Troubleshooting

1. Western Powders, *Handloading Guide 8.0*, 2020, "Avoid Excessive Force," hodgdonpowderco.com/wp-content/uploads/2023/04/WesternPowdersHandloadingGuide8.0_WEB-1.pdf.
2. "Safety Tip: How to Check for Potential Case-Head Separation," *AccurateShooter Daily Bulletin*, 2025, bulletin.accurateshooter.com/2025/01/safety-tip-how-to-check-for-potential-case-head-separation/.
3. Western Powders, *Handloading Guide 8.0*, p. 5.
4. Western Powders, *Handloading Guide 8.0*, p. 16.
5. Alex Findlay and Matt Findlay, "Annealing Under the Microscope, Part 4," *AMP Annealing*, 2019, ampannealing.com/articles/55/annealing-under-the-microscope/; Mitch Campana, "What Standard Do RCBS Dies Size Brass To?" *RCBS Reloading Articles*, 2026, rcbs.com/reloading-articles/what-standard-do-rcbs-dies-size-brass-to/.
6. Western Powders, *Handloading Guide 8.0*, "Priming" and "Primer Warnings."
7. Alliant Powder, *Reloaders' Guide*, 2023, p. 8, Inspection C.2, alliantpowder.com/resources/catalog/AP399_2023AlliantPowderReloadersGuide_SinglePgsNoCrops.pdf; Hodgdon, *2025 Annual Manual*, 2024, "The Versatile 257 Roberts," pp. 23–24.
8. Sierra Bullets, "Priming," *Reload Basics*, archived 20 January 2025; page since retired, http://web.archive.org/web/20250120214944/https://www.sierrabullets.com/reload-basics/priming/; Springfield Armory, *M1A Operation and Safety Manual*, 2020, p. 5, springfield-armory.com/wp-content/uploads/M1A-Manual.pdf; Wayne Faatz, "M1 Garand Slam-Fires: Potential Causes & Solutions," *American Rifleman*, first published October 1983 as "The Mysterious Slam-Fire in the M1 Garand," 2020, americanrifleman.org/content/m1-garand-slam-fires-potential-causes-solutions/.
9. A&D Company, *FZ-i / FX-i Series Precision Balance Instruction Manual*, 1WMPD4001863C, 2011, aandd.jp/products/manual/balances/fz_fx-i.pdf; RCBS, *ChargeMaster Supreme Product Instructions*, #98943, rev. 10-25, 2025, rcbs.com/wp-content/uploads/2025/10/pi_98943_ChargemasterSupreme_Manual_5LIM_rev_10-25.pdf.
10. Forster Products, *Powder Funnel with Long Drop Tube*, forsterproducts.com/product/powder-funnel-with-long-drop-tube/; "Advanced Reloading: Controlling Cartridge Powder Column Height," *AccurateShooter Daily Bulletin*, 2014, bulletin.accurateshooter.com/2014/11/advanced-reloading-controling-cartridge-powder-column-height/.
11. Western Powders, *Handloading Guide 8.0*, p. 17.
12. Empirical Precision, *User Guide*, linked from the app's dashboard, 2026, section 15.1, empiricalprecision.com.
13. Mitch Campana, "Mastering Bottleneck Case Sizing: Full Length, Partial, and Neck Sizing Explained," *RCBS Reloading Articles*, 2026, rcbs.com/reloading-articles/mastering-bottleneck-case-sizing-full-length-partial-and-neck-sizing-explained/; Redding Reloading Equipment, *Precision Expanding Die Instructions*, V. 12.25, redding-reloading.com/wp-content/uploads/Expanding-Mandrel-Die-1-1.pdf; Hornady, *Match Grade Die Instructions*, 2025, static.hornady.media/presscenter/docs/1410994443-1761252922-Match-Grade-Die-Instructions.pdf; Forster Products, *Expander Balls vs Mandrels: What's the Real Difference?* 2025, forsterproducts.com/expander-balls-vs-mandrels-whats-the-real-difference/.
14. Browning, *X-Bolt Rifle Owner's Manual*, safety rule 10, ammunition malfunction, browning.com/support/owners-manuals/x-bolt-rifle.html.
15. Browning, *X-Bolt Rifle Owner's Manual*; SAAMI, *Frequently Asked Questions*, What should I do if my firearm fails to fire when the trigger is pulled? saami.org/faqs/.
16. Bryan Litz, *Modern Advancements in Long Range Shooting*, Volume III, Applied Ballistics Books, 2022; Cal Zant, "Powder Temperature Sensitivity: The Hidden Factor Affecting Your Long-Range Accuracy," *Precision Rifle Blog*, 2025, precisionrifleblog.com/2025/03/08/powder-temperature-sensitivity/; "Effects of Humidity on Powder Performance," *AccurateShooter Daily Bulletin*, 2025, bulletin.accurateshooter.com/2025/01/effects-of-humidity-on-powder-performance-podcast-info-2/.

17. Western Powders, *Handloading Guide 8.0*, "Bullet Stabilization Problems."
18. Empirical Precision, *User Guide*, section 16.
19. Empirical Precision, *User Guide*, section 9.
20. Empirical Precision, *User Guide*, section 15.3.
21. Berger Bullets, *How to Load a Hybrid Bullet*, 2021, bergerbullets.com/shoot-better/shooting-knowledge/how-to-load-a-hybrid-bullet/.
22. Karl W. Kleimenhagen, "Chronographs and Pressure," *Karl's Soapbox*, 2006, http://kwk.us/chronographs.html.
23. Bryan Litz, *Modern Advancements in Long Range Shooting*, Volume II, Applied Ballistics Books, 2016; Applied Ballistics, "Case Neck Tension," *The Science of Accuracy*, episode 23, replies by Bryan Litz in the comments, archived copy, 2022, web.archive.org/web/20241212180151/https://thescienceofaccuracy.com/podcast/23-case-neck-tension/.

Glossary

Annealing. Heating the neck and shoulder of a case to soften brass hardened by firing and sizing. It extends neck life. *p. 109*

Ball powder. Powder made as small spheres, also called spherical powder. Many are rolled flatter and coated to slow the start of the burn. It flows easily through a measure and packs densely. *p. 64*

Barrel tuner. An adjustable weight on the muzzle, moved in small steps to change how the barrel vibrates. Whether it helps by a useful, repeatable amount is still open. *p. 158*

Base-to-shoulder length. The length from the case head to a point on the shoulder, measured with a comparator. Used to set shoulder bump. *p. 96*

Baseline. The rifle's measured performance in one fixed hardware state. Loads are compared only within one baseline. *p. 14*

Batch. Rounds loaded together from one lot of each component, with an ID such as B3-2. *p. 141*

Bearing surface. The full-diameter shank of a bullet, the part that grips the rifling. More of it adds friction in the bore and nudges pressure up. *p. 71*

Boat tail. A base that tapers to reduce drag. Long-range match bullets usually have one. *p. 71*

Book maximum, book velocity. The maximum charge and its corresponding velocity in the published load data you are using. *pp. 82 and 149*

Brass batch. A group of cases of one headstamp, one lot and one firing count, kept together for life under a name such as D-3. *p. 90*

Burn rate. A powder's place in an order from fast to slow. It is relative, not a number, and can shift from one cartridge to another. Powders next to each other on a burn chart are never interchangeable. *p. 63*

Bushing die. A sizing die, full-length or neck only, that sizes the neck in an interchangeable bushing. Bushings come in .001 inch steps, so you can choose the neck tension. Variation in wall thickness passes through to the inside of the neck. *pp. 36 and 95*

Button rifling. Rifling formed by pulling or pushing a hard carbide button through the bore, displacing metal to form the grooves without cutting steel away. Because cold-forming leaves internal stress in the steel, the barrel is stress-relieved afterward. *p. 19*

Case capacity (water capacity). The room inside a fired case, measured as the weight of water that fills it to the mouth, in grains of water (gr H_2O). It is one of the strongest levers on pressure. *p. 54*

Case fill. How much of the case the powder takes up: the charge's poured volume as a share of the usable case capacity. Some manuals print it as load density or fill ratio. *p. 66*

Case gauge. A gauge cut to standard minimum chamber dimensions. It checks case length and shoulder position. *pp. 48 and 130*

Case-head expansion. Growth of the case head's diameter after firing. An unreliable pressure sign. *p. 152*

CBTO. Cartridge base to ogive. The length from the case head to a point on the bullet's ogive, measured with a comparator. It tracks the jump to the lands, where COAL does not. *p. 122*

Chamfer. An even bevel cut inside the case mouth after trimming. Without one, the mouth can shave the bullet jacket as it seats. *p. 104*

Check weight. A known mass used to verify a scale. *pp. 46 and 119*

C.I.P. The Permanent International Commission for the Proof of Small Arms. It sets the standards used by the proof houses of its member states. Its pressure limits are in bar. *p. 25*

COAL. Cartridge overall length, from the case head to the bullet's tip. The magazine limits it, and published data lists it. *p. 122*

Comparator. A caliper insert that measures to a point on the ogive or the shoulder. *pp. 48 and 122*

Compressed load. A load whose case fill is over 100 percent, so the seated bullet presses on the powder. Compressed powder can push the bullet out over time. *p. 66*

Concentricity gauge. A tool that turns a case or round against a dial indicator to read runout. *pp. 49 and 101*

Contour. The outside shape of a barrel along its length: its diameters and taper. Also called the profile. *p. 14*

Crimp. The case mouth rolled or pressed into the bullet to grip it, or a swaged ring that holds a military primer in its pocket. A pocket crimp comes out before repriming. *pp. 113 and 127*

Crown. The finished edge of the bore at the muzzle, the last steel the bullet touches. *p. 14*

CUP. Copper units of pressure. An older method that reads the dent the gas leaves in a copper slug. Compare CUP figures only with other CUP figures. They do not convert to psi. *p. 25*

Cut rifling. Rifling cut one groove at a time by a hook cutter drawn through the bore many times. *p. 19*

Datum. The point on the shoulder where it reaches a set diameter. The chamber's headspace and the case's base-to-shoulder length are both measured to it. *p. 26*

Doppler chronograph. A chronograph that tracks the bullet by radar. In one test, two Doppler units agreed within about 1 to 5 fps. *p. 50*

Dummy round. A round with no primer and no powder, marked so it can never mix with live rounds. It is used to find the magazine length and to set up seating. *p. 23*

Ejector mark. A bright spot on the case head where brass flowed into the ejector hole in the bolt face. A pressure sign. Gas guns often leave such marks even with mild loads. *pp. 135 and 151*

Expander mandrel. A polished rod pushed down through a sized neck to open it from the inside. It sets the inside diameter directly, and the neck springs back a little smaller than the mandrel. *pp. 36 and 99*

Extruded powder. Stick powder: short cylinders cut from a pressed strand, most with one hole through the middle and some with several. It pours a little lighter than ball powder and meters less evenly. Long kernels can bridge in a powder measure. *p. 68*

Fire-form. To fire a case in a chamber of a new shape, such as an improved chamber, so the case blows out to fit it. The case head must be held against the bolt face while it forms. The same load gives less velocity than in the parent's chamber, because some of the energy goes into forming the case. *p. 83*

Flash hole. The hole from the primer pocket into the case. The primer's flame passes through it to the powder. *p. 25*

Floating firing pin. A firing pin that rides free in the bolt with no retaining spring, as in many semi-automatic service rifles. When the bolt slams home, the pin taps the primer. A high or sensitive primer can fire from that tap. *pp. 59 and 134*

Fluting. Lengthwise grooves milled into the outside of a barrel to save weight. *p. 15*

Freebore. A smooth, unrifled section just ahead of the case neck. A bullet travels through it before it touches the rifling. *p. 26*

Full-case load. A powder and cartridge pair whose published maximum charge fills the case, so a double charge or a gross overcharge cannot fit. *p. 67*

Full-length sizing. Sizing the neck, shoulder and body of a case, with the shoulder bumped back so the case chambers freely. It is the default for any rifle, and a semi-automatic needs it for every case. *p. 96*

Gas port. The hole in a gas gun's barrel that feeds gas to work the action. The pressure there depends on the powder. *p. 134*

Hammer forging. Forming a barrel by beating a blank down onto a mandrel that carries the reverse of the rifling. *p. 19*

Headspace. The distance from the bolt face to the feature in the chamber that stops the cartridge from moving forward. On most bottleneck cases, that feature is the shoulder. Rimmed cartridges headspace on the rim, and belted magnums on the front of the belt. *p. 25*

Headstamp. The maker's name and the cartridge stamped on the case head. Makers differ in capacity, so a new headstamp is a component change. *p. 90*

Improved cartridge. A cartridge made by fire-forming a parent case to a straighter body and a steeper shoulder, so it holds more powder. It keeps the parent's head, length and neck. *p. 80*

Incipient head separation. A thin band forming inside a case just above the web as it stretches. A bright ring outside is a sign. Discard the case. *p. 92*

Instrument error. A chronograph's own scatter. It adds to the true velocity SD. *p. 50*

Jam. Seating a bullet so it touches or presses into the lands. It raises pressure. *p. 124*

Jump. How far the bullet travels before it meets the lands. You set it with the CBTO. *p. 122*

Ladder test. Firing one shot, or a short string, at each of a series of rising charges to look for a node. With so few shots, random scatter makes flat spots in most ladders. A ladder is still the right way to work up for pressure and velocity. *p. 155*

Lands. The raised ribs of the rifling. The bullet's jump is measured to them. *p. 14*

Law of Large Numbers. As shots add up, the sample average approaches the true average. *p. 2*

Line of sight. The straight line from the scope to the aim point. The bullet leaves the muzzle below it, rises through it and falls back through it at the zero distance. *p. 22*

Lot. A batch of components produced under uniform conditions and marked with a single lot number. Several production runs with no process changes between them may share one lot number. Record the lot number from the package for every component you load. *p. 54*

Magazine length. The longest round your magazine feeds and cycles every time, found with dummy rounds. It caps COAL for every round fed from the magazine. A round loaded by hand, one at a time, is not bound by it. *p. 14*

MAP. Maximum average pressure. SAAMI's pressure limit, the highest average pressure a maker should load to. C.I.P.'s limit is Pmax. Both are ceilings for test ammunition, not targets for handloads. *p. 30*

Monolithic bullet. A bullet of one piece of copper or copper alloy, with no lead. It is longer than a lead-core bullet of the same weight. It needs its own published data and more jump. *p. 71*

Muzzle pressure. The gas pressure behind the bullet as it leaves the muzzle. It rises as the barrel gets shorter. *p. 17*

Neck sizing. Sizing only the neck and leaving the fired body and shoulder alone. It suits bolt actions only, with cases fired in that rifle. The body still grows with each firing, so a body or full-length die is needed later. *p. 96*

Neck tension. The grip of the case neck on the bullet. The part you set with tools is the interference: the bullet diameter minus the inside diameter of the sized neck. *p. 95*

Node. A claimed span of charges where velocity or point of impact barely changes with charge. Nodes found with one shot per step disappeared in larger samples. *p. 155*

Ogive. The curved nose of a bullet, between the bearing surface and the tip. Its profile is tangent, secant or hybrid. *p. 71*

Optimal charge weight. A method that fires 3-shot groups at a series of charges and picks the middle of three neighboring charges whose groups center on the same point. A 3-shot group's center wanders by more than the effect sought. *p. 155*

Pmax. C.I.P.'s pressure limit, a maximum average pressure set and measured under C.I.P.'s own rules. A Pmax and a MAP for the same cartridge are not interchangeable. *p. 30*

Pressure signs. Signs of high pressure seen on the case or felt in the bolt: a stiff bolt lift, an ejector mark and a flattened, cratered or pierced primer. They are unreliable early warnings. Any one means stop. *p. 149*

Primer pocket. The recess in the case head that holds the primer. The flash hole leads from it into the case. *p. 25*

psi. Pounds per square inch. SAAMI states its pressure limits in psi, read with an electronic transducer. A psi figure does not convert to or from CUP. *p. 25*

Runout. How far the neck or the bullet swings off the case axis in one turn. The full swing is the total indicated runout (TIR). *p. 95*

SAAMI. The Sporting Arms and Ammunition Manufacturers' Institute, the American industry body that publishes cartridge and chamber standards. Its pressure limits are in psi. *p. 25*

Seating depth. How deep the bullet is seated in the case, set and recorded as a CBTO. Seating deeper raises pressure. The seated depth, from the case mouth to the bullet's base, must be at least one caliber. *p. 126*

Session. One range trip with one rifle, with its own ID, plan and conditions. A loading session is one sitting of work in the workshop. It begins with the scale checked, ends with the powder back in its container and the measure empty, and starts a new batch. *pp. 8 and 141*

Setback. A bullet pushed deeper into the case, as hard cycling in a gas gun can do. It raises pressure. *p. 136*

Shoulder bump. How far the sizing die pushes the shoulder back from its fired position. Typically .001 to .002 inch for a bolt action and .003 to .005 inch for a semi-automatic. *p. 95*

Sight height. The distance from the center of the bore to the center of the scope. *p. 14*

Slam fire. A round that fires as the bolt closes, before the trigger is pulled, when a floating firing pin sets off a sensitive primer. *p. 136*

Squib. A shot without enough energy to push the bullet out of the barrel. Stop and check the bore. *p. 11*

Start load. The lowest charge a source publishes for a load, or a start worked out from a maximum-only source. Every work-up begins there. *p. 77*

Stringing. A group that is longer on one axis than chance explains. *p. 166*

Temperature sensitivity. The change in velocity per degree of powder temperature. Concern starts near 0.5 fps per °F. *pp. 69 and 160*

Throat (leade). The tapered start of the rifling, where the lands rise to full height. Hot gas wears it with every shot, so the lands move forward over a barrel's life. *p. 26*

Throw. To meter a powder charge by volume from a powder measure. *pp. 45 and 119*

Trim-to length. The published length you trim a case back to, usually .005 to .010 inch under the maximum case length. The margin lets the case grow for a firing or more before it reaches the limit. *p. 103*

Twist rate. The length of barrel in which the rifling makes one full turn, written 1:8 for one turn in 8 inches. A smaller number means a faster twist and more spin. *p. 19*

Velocity ceiling. The book velocity at the maximum charge, lowered for a shorter barrel and never raised for a longer one. A work-up stops there or at the maximum charge, whichever comes first. It stands in for the pressure limit and is not a velocity target. *pp. 80 and 149*

Wildcat. A cartridge made by necking a parent case up or down to a new bore. The parent's data no longer applies, so a wildcat borrows a start load, a maximum charge and a velocity ceiling from a published cartridge with the same bore and a case capacity close to yours, but no larger. *p. 80*

Work-up. Rounds loaded in small steps up from the published start load, then fired in order, lowest first, while you watch velocity and pressure signs. *pp. 80 and 149*

Yaw. The angle between the bullet's axis and the direction it is flying. A bullet can leave the muzzle with some, and a marginal twist lets it persist. *p. 17*

Sources

Published Load Data

Alliant (alliantpowder.com), Barnes (barnesbullets.com), Berger (bergerbullets.com), Federal (federalpremium.com), Hodgdon (hodgdonreloading.com), Hornady (hornady.com), Lyman (lymanproducts.com), Nosler (nosler.com), Reload Swiss, Shooters World (shootersworldpowder.com), Sierra (sierrabullets.com), Speer (speer.com), Vihtavuori (vihtavuori.com).

Cartridge Histories

Web pages accessed 2026-10-05 unless marked.

.218 Bee. Wikipedia. en.wikipedia.org/wiki/.218_Bee; Super-X 218 Bee, 46 Grain. Winchester Ammunition. winchester.com/Products/Ammunition/Rifle/Super-X/X218B (accessed 2026-10-19); Classic Guns: The Winchester Model 65 in .218 Bee. Gun Digest. gundigest.com/gun-collecting /classic-guns-winchester-model-65

.219 Zipper. Wikipedia. en.wikipedia.org/wiki/.219_Zipper; Tables of Dimensions of Cartridges and Chambers (TDCC). C.I.P. bobp.cip-bobp.org/en/tdcc_public (accessed 2026-10-19); Ammo Brief: .219 Zipper. Gun Digest. gundigest.com/gear-ammo/ammunition/219-zipper

22 ARC. Wikipedia. en.wikipedia.org/wiki/.22_ARC; 6mm ARC. Wikipedia. en.wikipedia.org/wiki/6mm_ARC; Hornady. hornady.com/22arc (accessed 2026-10-19)

.22 BR Remington. Wikipedia. en.wikipedia.org/wiki/.22_BR_Remington; .20 BR. Wikipedia. en.wikipedia.org/wiki/.20_BR

22 Creedmoor. Hornady's 22 Creedmoor Ultimate Predator Cartridge. Shooting Times. shootingtimes.com/editorial /hornady-22-creedmoor-cartridge-review/496793; Wikipedia. en.wikipedia.org/wiki/.22_Creedmoor; Hornady. hornady.com/22creedmoor (accessed 2026-10-19)

.22 Hornet. Wikipedia. en.wikipedia.org/wiki/.22_Hornet; Super-X 22 Hornet, 45 Grain. Winchester Ammunition. winchester.com/Products/Ammunition/Rifle/Super-X/X22H1 (accessed 2026-10-19)

22 Nosler. Meet the 22 Nosler. American Hunter (NRA). americanhunter.org/articles/2017/1/19/meet-22-nosler/; Nosler cartridges. Wikipedia. en.wikipedia.org/wiki/Nosler _cartridges; 22 Nosler Rifle Cartridge. Nosler. nosler.com/explore/nosler-cartridges/22-nosler-rifle -cartridge (accessed 2026-10-19)

.22 PPC USA. .22 PPC. Wikipedia. en.wikipedia.org/wiki/.22_PPC; Tables of Dimensions of

Cartridges and Chambers (TDCC). C.I.P. bobp.cip-bobp.org/en/tdcc_public (accessed 2026-10-19)

.22-250 Remington. Wikipedia. en.wikipedia.org/wiki/.22-250_Remington; High Performance Rifle, 22-250 Rem, 55 Grain, Pointed Soft Point. Remington Ammunition. remington.com/rifle/high-performance-rifle/29-21311.html (accessed 2026-10-19)

.220 Swift. Wikipedia. en.wikipedia.org/wiki/.220_Swift; Super-X 220 Swift, 50 Grain. Winchester Ammunition. winchester.com/Products/Ammunition/Rifle/Super-X/X220S (accessed 2026-10-19)

.222 Remington. Wikipedia. en.wikipedia.org/wiki/.222_Remington; High Performance Rifle, 222 Rem, 50 Grain, Pointed Soft Point. Remington Ammunition. remington.com/rifle/high-performance-rifle/29-21303.html (accessed 2026-10-19)

.222 Remington Magnum. Wikipedia. en.wikipedia.org/wiki/.222_Remington_Magnum; ANSI/SAAMI Z299.4-2025: Voluntary Industry Performance Standards for Pressure and Velocity of Centerfire Rifle Ammunition. SAAMI. saami.org/wp-content/uploads/2026/04/SAAMI-Z299.4-CFR-2025-Centerfire-Rifle-Approved-2-10-2025-2026-04-27.pdf (accessed 2026-10-19)

.223 Remington. Wikipedia. en.wikipedia.org/wiki/.223_Remington; 223 Ammo Buyer's Guide: Everything You Need to Know. Remington Ammunition. remington.com/big-green-blog/223-ammo-buyers-guide-everything-you-need-to-know-before-your-next-purchase.html (accessed 2026-10-19)

.223 WSSM. .223 Winchester Super Short Magnum. Wikipedia. en.wikipedia.org/wiki/.223_Winchester_Super_Short_Magnum; What is the historical timeline for Winchester firearms? Winchester Repeating Arms. winchesterguns.com/support/faq/historical-timeline.html (accessed 2026-10-19)

.224 Valkyrie. Wikipedia. en.wikipedia.org/wiki/.224_Valkyrie; Choosing The Best Varmint Ammunition. Federal Premium Ammunition. federalpremium.com/its-federal-season/how-to-choose-the-right-varmint-load.html (accessed 2026-10-19); Gold Medal Sierra MatchKing 224 Valkyrie. Federal Premium Ammunition. federalpremium.com/rifle/gold-medal/gold-medal-sierra-matchking/11-GM224VLK1.html; Federal Premium Introduces Gold Medal Sierra MatchKing 224 Valkyrie. Officer.com. officer.com/tactical/firearm-accessories/ammunition/press-release/21007118/federal-premium-ammunition-ammunition-for-rifle-handgun-shotshell-rimfire-muzzleloading-and-more-federal-premium-introduces-gold-medal-sierra-matchking-224-valkyrie (accessed 2026-10-19)

.224 Weatherby Magnum. Wikipedia. en.wikipedia.org/wiki/.224_Weatherby_Magnum; Weatherby. weatherby.com/store/224-weatherby-magnum/ (accessed 2026-10-19)

.225 Winchester. Wikipedia. en.wikipedia.org/wiki/.225_Winchester; Super-X 225 Winchester, 55 Grain. Winchester Ammunition. winchester.com/Products/Ammunition/Rifle/Super-X/X2251 (accessed 2026-10-19); Handloading the .225 Winchester. Wolfe Publishing. loaddata.com/Article/LoadDevelopment/Handloading-the-225-Winchester/123

5.56x45mm NATO. Wikipedia. en.wikipedia.org/wiki/5.56×45mm_NATO; FN Herstal. fnherstal.com/en/defence/ammunition/556x45mm/ (accessed 2026-10-19)

24 Nosler. 24 Nosler Review: Everything You Need to Know. Shooting Times. shootingtimes.com/editorial/review-the-24-nosler/357574; New SAAMI Standards for .224 Valkyrie, 6mm Creedmoor and .24 Nosler Cartridges. The Firearm Blog. thefirearmblog.com/blog/2018/02/15/new-saami-standards-224-valkyrie-6mm-creedmoor-and-24-nosler/

.240 Weatherby Magnum. Wikipedia. en.wikipedia.org/wiki/.240_Weatherby_Magnum; Weatherby. weatherby.com/store/240-weatherby-magnum/ (accessed 2026-10-19); Ballistic Studies. ballisticstudies.com/Knowledgebase/.240+Weatherby+Magnum.html

.243 Winchester. Wikipedia. en.wikipedia.org/wiki/.243_Winchester; Historical Timeline 1950-1999. Winchester Repeating Arms. winchesterguns.com/news/historical-timeline/1950-1999.html (accessed 2026-10-19)

.243 WSSM. .243 Winchester Super Short Magnum. Wikipedia. en.wikipedia.org/wiki/.243_Winchester_Super_Short_Magnum; Winchester Super Short Magnum. Wikipedia. en.wikipedia.org/wiki/Winchester_Super_Short_Magnum; What is the historical timeline for Winchester firearms? Winchester Repeating Arms. winchesterguns.com/support/faq/historical-timeline.html (accessed 2026-10-19); .243 Winchester Super Short Magnum (WSSM). Ballistic Studies. ballisticstudies.com/Knowledgebase/.243+Winchester+Super+Short+Magnum+WSSM.html

6 GT. Ammo Brief: 6mm GT. Gun Digest. gundigest.com/gear-ammo/ammunition/6mm-gt

6mm ARC. Wikipedia. en.wikipedia.org/wiki/6mm_ARC; Hornady Introduces the 6mm ARC. Hornady. press.hornady.com/release/2020/06/03/hornady-introduces-the-6mm-arc/ (accessed 2026-10-19); .22 ARC. Wikipedia. en.wikipedia.org/wiki/.22_ARC

6mm BR. Wikipedia. en.wikipedia.org/wiki/6mm_BR; Norma Precision: Our Heritage Since 1902. Norma Precision. norma-ammunition.com/about-norma/alt-history (accessed 2026-10-19); Tables of Dimensions of Cartridges and Chambers (TDCC). C.I.P. bobp.cip-bobp.org/en/tdcc_public (accessed 2026-10-19)

6mm Creedmoor. Sequel: The 6 mm Creedmoor. American Rifleman. americanrifleman.org/content/sequel-the-6-mm-creedmoor/; 6mm Creedmoor vs 25 Creedmoor: Old Creed or New Creed? Field & Stream. fieldandstream.com/outdoor-gear/guns/ammo/rifle-ammo/6mm-creedmoor-vs-25-creedmoor

6mm Dasher. Wildcat Cartridges: 6mm Dasher. Handloader Magazine. handloadermagazine.com/wildcat-cartridges-36; 6mm BR. Wikipedia. en.wikipedia.org/wiki/6mm_BR; Tables of Dimensions of Cartridges and Chambers (TDCC). C.I.P. bobp.cip-bobp.org/en/tdcc_public (accessed 2026-10-19)

6mm PPC. Wikipedia. en.wikipedia.org/wiki/6mm_PPC; Tables of Dimensions of Cartridges and Chambers (TDCC). C.I.P. bobp.cip-bobp.org/en/tdcc_public (accessed 2026-10-19); 6mm PPC-USA. Chuck Hawks. chuckhawks.com/6mm_PPC.htm

6mm Remington. Wikipedia. en.wikipedia.org/wiki/6mm_Remington; Core-Lokt, 6mm Remington, 100 Grain, Pointed Soft Point Core Lokt. Remington. remington.com/rifle/shop-by-caliber/shop-all-calibers/29-29051.html (accessed 2026-10-19)

6mm XC. Wikipedia. en.wikipedia.org/wiki/6_mm_XC; David Tubb's Recommendations for the 6XC. Superior Shooting Systems. davidtubb.com/image/data/davidtubb/articles/David Tubb's recommendations for 6XC_.pdf (accessed 2026-10-19); 6XC Cartridge Guide. 6mmBR. 6mmbr.com/6xc.html

6mm-284. Wildcat Cartridges: 6mm-284. Handloader. handloadermagazine.com/wildcat-cartridges-29

6x45 (6mm-223). 6×45mm. Wikipedia. en.wikipedia.org/wiki/6×45mm

6x47 Lapua. 6X47 Lapua (6-6.5x47 Lapua) Review. RifleShooter. rifleshooter.com/2014/11/6x47-lapua/; Analysis: 6.5x47 and 6x47 Lapua. MDT. mdttac.com/blogs/read/analysis-65x47-and-6x47-lapua-inside-mdt

25 Creedmoor. Hornady Introduces 25 Creedmoor. American Hunter. americanhunter.org/content/hornady-introduces-25-creedmoor/; Hornady Introduces New 25 Creedmoor SAAMI Cartridge. AccurateShooter Daily Bulletin. bulletin.accurateshooter.com/2025/08/hornady-introduces-new-25-creedmoor-saami-cartridge/; 25 Creedmoor 128 gr ELD-X Precision Hunter. Hornady. hornady.com/ammunition/rifle/25-creedmoor-128-gr-eld-x

.25 WSSM. .25 Winchester Super Short Magnum (WSSM). Ballistic Studies. ballisticstudies.com/Knowledgebase/.25+Winchester+Super+Short+Magnum+WSSM.html; Behind the Bullet: The .25 WSSM. American Hunter. americanhunter.org/content/behind-the-bullet-the-25-wssm/

.25-06 Remington. Wikipedia. en.wikipedia.org/wiki/.25-06_Remington; Core-Lokt, 25-06 Rem, 100 Grain, Pointed Soft Point Core Lokt. Remington Ammunition. remington.com/rifle/shop-by-caliber/shop-all-calibers/29-21507.html (accessed 2026-10-19)

.25-20 Winchester. Wikipedia. en.wikipedia.org/wiki/.25-20_Winchester; Super-X 25-20 Winchester, 86 Grain. Winchester Ammunition. winchester.com/Products/Ammunition/Rifle/Super-X/X25202 (accessed 2026-10-19)

.250 Savage. .250-3000 Savage. Wikipedia. en.wikipedia.org/wiki/.250-3000_Savage; .22-250 Remington. Wikipedia. en.wikipedia.org/wiki/.22-250_Remington; ANSI/SAAMI Z299.4-2025: Voluntary Industry Performance Standards for Pressure and Velocity of Centerfire Rifle Ammunition. SAAMI. saami.org/wp-content/uploads/2026/04/SAAMI-Z299.4-CFR-2025-Centerfire-Rifle-Approved-2-10-2025-2026-04-27.pdf (accessed 2026-10-19)

.256 Winchester Magnum. Wikipedia. en.wikipedia.org/wiki/.256_Winchester_Magnum; Tables of Dimensions of Cartridges and Chambers (TDCC). C.I.P. bobp.cip-bobp.org/en/tdcc_public (accessed 2026-10-19)

.257 Roberts. Wikipedia. en.wikipedia.org/wiki/.257_Roberts; Core-Lokt, 257 Roberts, 117 Grain, Core-Lokt Soft Point. Remington Ammunition. remington.com/rifle/core-lokt/29-28335.html (accessed 2026-10-19); History of the .257 Roberts. Sporting Shooter. sportingshooter.com.au/ask-uncle-nick/history-of-the-257-roberts/

.257 Weatherby Magnum. Wikipedia. en.wikipedia.org/wiki/.257_Weatherby_Magnum; Weatherby. weatherby.com/store/257-weatherby-magnum/ (accessed 2026-10-19); In Praise Of The .257 Weatherby Magnum. Shooting Times. shootingtimes.com/editorial/ammunition_st257weatherbymagnum_031706/100524 (accessed 2026-10-19)

26 Nosler. Wikipedia. en.wikipedia.org/wiki/.26_Nosler; 26 Nosler Rifle Cartridge. Nosler. nosler.com/explore/nosler-cartridges/26-nosler-rifle-cartridge (accessed 2026-10-19); History. Nosler. nosler.com/the-nosler-history.html (accessed 2026-10-19)

.260 Remington. Wikipedia. en.wikipedia.org/wiki/.260_Remington; Premier Match, 260 Rem, 140 Grain, MatchKing Hollow Point. Remington Ammunition. remington.com/rifle/premier-match/29-26852.html (accessed 2026-10-19)

.264 Winchester Magnum. Wikipedia. en.wikipedia.org/wiki/.264_Winchester_Magnum; Historical Timeline 1950-1999. Winchester Repeating Arms. winchesterguns.com/news/historical-timeline/1950-1999.html (accessed 2026-10-19); Behind the Bullet: .264 Winchester Magnum. American Hunter. americanhunter.org/content/behind-the-bullet-264-winchester-magnum/

6.5 Creedmoor. 6.5mm Creedmoor. Wikipedia. en.wikipedia.org/wiki/6.5mm_Creedmoor; Hornady. hornady.com/6.5creedmoor (accessed 2026-10-19)

6.5 Grendel. 6.5mm Grendel. Wikipedia. en.wikipedia.org/wiki/6.5mm_Grendel; Company History. Alexander Arms. alexanderarms.com/our-history/ (accessed 2026-10-19); 6mm ARC. Wikipedia. en.wikipedia.org/wiki/6mm_ARC

6.5 PRC. Behind the Bullet: 6.5 PRC. American Hunter. americanhunter.org/content/behind-the-bullet-6-5-prc/; Why You Should Be a Fan of the New Hornady 6.5 PRC. American Hunter. americanhunter.org/articles/2018/2/21/why-you-should-be-a-fan-of-the-new-hornady-65-prc/

6.5-284 Norma. Wikipedia. en.wikipedia.org/wiki/6.5-284_Norma; Norma Precision: Our Heritage Since 1902. Norma Precision. norma-ammunition.com/about-norma/alt-history (accessed 2026-10-19); Behind the Bullet: 6.5-284 Norma. American Hunter (NRA). americanhunter.org/content/behind-the-bullet-6-5-284-norma/; Tables of Dimensions of Cartridges and Chambers (TDCC). C.I.P. bobp.cip-bobp.org/en/tdcc_public (accessed 2026-10-19)

6.5-300 Weatherby Magnum. Wikipedia. en.wikipedia.org/wiki/6.5-300_Weatherby_Magnum; Weatherby. weatherby.com/store/6-5-300-weatherby-magnum/ (accessed 2026-10-19); The New 6.5-300 Weatherby Magnum and Mark V Rifle. American Rifleman. americanrifleman.org/content/the-new-6-5-300-weatherby-magnum-and-mark-v-rifle/; 6.5-300 Weatherby Magnum (archived 2016 page). Weatherby. web.archive.org/web/20161108133513/http://www.weatherby.com/6-5-300-wby-mag.html (accessed 2026-10-19)

6.5mm BR Remington. 6.5mm BR Remington (Sierra Reloading Manual, 6th ed.). Sierra Bullets. sierrabullets.com/content/load-data/rifle/264-6.5mm/6.5mm-br-remington.pdf

6.5mm Carcano. 6.5×52mm Carcano. Wikipedia. en.wikipedia.org/wiki/6.5×52mm_Carcano; Tables of Dimensions of Cartridges and Chambers (TDCC). C.I.P. bobp.cip-bobp.org/en/tdcc_public (accessed 2026-10-19)

6.5mm Remington Magnum. Wikipedia. en.wikipedia.org/wiki/6.5mm_Remington_Magnum; Tables of Dimensions of Cartridges and Chambers (TDCC). C.I.P. bobp.cip-bobp.org/en/tdcc_public (accessed 2026-10-19)

6.5mm-06. 6.5-06 A-Square. Wikipedia. en.wikipedia.org/wiki/6.5-06_A-Square; The Wonderful 6.5's. American Hunter. americanhunter.org/content/the-wonderful-6-5-s/

6.5x47 Lapua. Wikipedia. en.wikipedia.org/wiki/6.5×47mm_Lapua; Lapua. lapua.com/cartridges/6-5x47-lapua/ (accessed 2026-10-19)

6.5x50 Japanese. 6.5×50mmSR Arisaka. Wikipedia. en.wikipedia.org/wiki/6.5×50mmSR_Arisaka; Tables of Dimensions of Cartridges and Chambers (TDCC). C.I.P. bobp.cip-bobp.org/en/tdcc_public (accessed 2026-10-19); .257 Roberts. Wikipedia. en.wikipedia.org/wiki/.257_Roberts

6.5x55 Swedish. 6.5×55mm Swedish. Wikipedia. en.wikipedia.org/wiki/6.5×55mm_Swedish; ANSI/SAAMI Z299.4-2025: Voluntary Industry Performance Standards for

Pressure and Velocity of Centerfire Rifle Ammunition. SAAMI. saami.org/wp-content/uploads/2026/04/SAAMI-Z299.4-CFR-2025-Centerfire-Rifle-Approved-2-10-2025-2026-04-27.pdf (accessed 2026-10-19)

6.5x57 Mauser. Wikipedia. en.wikipedia.org/wiki/6.5×57mm_Mauser; Tables of Dimensions of Cartridges and Chambers (TDCC). C.I.P. bobp.cip-bobp.org/en/tdcc_public (accessed 2026-10-19)

.270 Weatherby Magnum. Wikipedia. en.wikipedia.org/wiki/.270_Weatherby_Magnum; Weatherby. weatherby.com/store/270-weatherby-magnum/ (accessed 2026-10-19)

.270 Winchester. Wikipedia. en.wikipedia.org/wiki/.270_Winchester; Historical Timeline 1900-1949. Winchester Repeating Arms. winchesterguns.com/news/historical-timeline/1900-1949.html (accessed 2026-10-19)

.270 WSM. .270 Winchester Short Magnum. Wikipedia. en.wikipedia.org/wiki/.270_Winchester_Short_Magnum; What is the historical timeline for Winchester firearms? Winchester Repeating Arms. winchesterguns.com/support/faq/historical-timeline.html (accessed 2026-10-19)

6.8 Western. Wikipedia. en.wikipedia.org/wiki/6.8_Western; Winchester Receives 2021 Ammo of the Year Award from Guns and Ammo. Winchester Ammunition. winchester.com/Support/Media/In-The-News/2021/10/28/Winchester-Receives-2021-Ammo-of-the-Year-Award-from-Guns-and-Ammo (accessed 2026-10-19)

6.8mm Remington SPC. Wikipedia. en.wikipedia.org/wiki/6.8mm_Remington_SPC; Premier Match, 6.8 Rem SPC, 115 Grain, MatchKing Open Tip Match. Remington. remington.com/rifle/premier-match/29-27676.html (accessed 2026-10-19)

28 Nosler. Wikipedia. en.wikipedia.org/wiki/.28_Nosler; 28 Nosler Rifle Cartridges. Nosler. nosler.com/explore/nosler-cartridges/28-nosler-rifle-cartridges (accessed 2026-10-19)

.280 Ackley Improved. Wikipedia. en.wikipedia.org/wiki/.280_Ackley_Improved; Nosler. nosler.com/products/ammunition/cartridge/280-ackley-improved.html (accessed 2026-10-19)

.280 Remington. Wikipedia. en.wikipedia.org/wiki/.280_Remington; Core-Lokt, 280 Rem, 150 Grain, Pointed Soft Point Core Lokt. Remington Ammunition. remington.com/rifle/core-lokt/29-29069.html (accessed 2026-10-19); Core-Lokt, 280 Rem, 140 Grain, Pointed Soft Point Core Lokt. Remington Ammunition. remington.com/rifle/core-lokt/29-28313.html (accessed 2026-10-19); Core-Lokt, 280 Rem, 165 Grain, Core-Lokt Soft Point. Remington Ammunition. remington.com/rifle/core-lokt/29-28417.html (accessed 2026-10-19)

.284 Winchester. Wikipedia. en.wikipedia.org/wiki/.284_Winchester; Super-X 284 Winchester, 150 Grain. Winchester Ammunition. winchester.com/Products/Ammunition/Rifle/Super-X/X2842 (accessed 2026-10-19)

7-30 Waters. Wikipedia. en.wikipedia.org/wiki/7-30_Waters; Tables of Dimensions of Cartridges and Chambers (TDCC). C.I.P. bobp.cip-bobp.org/en/tdcc_public (accessed 2026-10-19)

7mm BR Remington. Wikipedia. en.wikipedia.org/wiki/7mm_BR_Remington; Tables of Dimensions of Cartridges and Chambers (TDCC). C.I.P. bobp.cip-bobp.org/en/tdcc_public (accessed 2026-10-19)

7mm PRC. 7mm PRC: Hornady's New Precision Rifle Cartridge. American Rifleman. americanrifleman.org/content/7-mm-prc-hornady-s-new-precision-rifle-cartridge/; The 7mm PRC: Hornady's New .284-Caliber Cartridge, Tested and Reviewed. Outdoor Life. outdoorlife.com/guns/7mm-prc-tested-and-reviewed/

7mm Remington Magnum. Wikipedia. en.wikipedia.org/wiki/7mm_Remington_Magnum; 7mm Remington Magnum, Explained. Remington. remington.com/big-green-blog/7mm-remington-magnum-explained.html (accessed 2026-10-19); Shop 7mm Rem Magnum Rifle Ammunition. Remington. remington.com/rifle/shop-by-caliber/7mm-rem-magnum/ (accessed 2026-10-19); 7mm Rem Mag 160gr Partition Trophy Grade Ammunition. Nosler. nosler.com/7mm-rem-mag-160gr-partition-trophy-grade-ammunition-1.html (accessed 2026-10-19)

7mm Remington SAUM. 7mm Remington Short Action Ultra Magnum. Wikipedia. en.wikipedia.org/wiki/7mm_Remington_Short_Action_Ultra_Magnum; Core-Lokt, 7mm Rem SAUM, 150 Grain, Pointed Soft Point Core Lokt. Remington. remington.com/rifle/shop-by-caliber/shop-all-calibers/29-27874.html (accessed 2026-10-19); 7mm Remington Short Action Ultra Magnum. Ballistic Studies. ballisticstudies.com/Knowledgebase/7mm+Remington+Short+Action+Ultra+Magnum.html

7mm RUM. 7mm Remington Ultra Magnum. Wikipedia. en.wikipedia.org/wiki/7mm_Remington_Ultra_Magnum; Premier Scirocco, 7mm Remington Ultra Mag, 150 Grain, Swift Scirocco Bonded. Remington. remington.com/rifle/premier-scirocco/29-29335.html (accessed 2026-10-19)

7mm STW. 7mm Shooting Times Westerner. Wikipedia. en.wikipedia.org/wiki/7mm_Shooting_Times_Westerner; Tables of Dimensions of Cartridges and Chambers (TDCC). C.I.P. bobp.cip-bobp.org/en/tdcc_public (accessed 2026-10-19); 25 Years With the 7 mm STW. American Rifleman. americanrifleman.org/articles/2013/4/23/25-years-with-the-7-mm-stw/

7mm Weatherby Magnum. Wikipedia. en.wikipedia.org/wiki/7mm_Weatherby_Magnum; Weatherby. weatherby.com/store/7mm-weatherby-magnum/ (accessed 2026-10-19)

7mm WSM. 7mm Winchester Short Magnum. Wikipedia. en.wikipedia.org/wiki/7mm_Winchester_Short_Magnum; What is the historical timeline for Winchester firearms? Winchester Repeating Arms. winchesterguns.com/support/faq/historical-timeline.html (accessed 2026-10-19); 7mm Winchester Short Magnum. Ballistic Studies. ballisticstudies.com/Knowledgebase/7mm+Winchester+Short+Magnum.html

7mm-08 Remington. Wikipedia. en.wikipedia.org/wiki/7mm-08_Remington; 7mm-08 vs 308: Which Rifle Cartridge is Right for You? Remington. remington.com/big-green-blog/7mm-08-308-which-rifle-cartridge-is-right-for-you.html (accessed 2026-10-19)

7x57 Mauser. 7×57mm Mauser. Wikipedia. en.wikipedia.org/wiki/7×57mm_Mauser; ANSI/SAAMI Z299.4-2025: Voluntary Industry Performance Standards for Pressure and Velocity of Centerfire Rifle Ammunition. SAAMI. saami.org/wp-content/uploads/2026/04/SAAMI-Z299.4-CFR-2025-Centerfire-Rifle-Approved-2-10-2025-2026-04-27.pdf (accessed 2026-10-19)

7x64 Brenneke. 7×64mm. Wikipedia. en.wikipedia.org/wiki/7×64mm; Company History. Brenneke. brenneke-ammunition.de/en/company/brenneke/company-history (accessed 2026-10-19)

7x65R. Chuck Hawks. chuckhawks.com/7x65R.htm; 7×64mm. Wikipedia. en.wikipedia.org/wiki/7×64mm;

Company History. Brenneke. brenneke-ammunition.de/en/company/brenneke/company-history (accessed 2026-10-19); Lapua. lapua.com/cartridges/7x65r/

.30 AR Remington. .30 Remington AR. Wikipedia. en.wikipedia.org/wiki/.30_Remington_AR; Core-Lokt, 30 Rem AR, 150 Grain, Pointed Soft Point Core Lokt. Remington. remington.com/rifle/shop-by-caliber/shop-all-calibers/29-29485.html (accessed 2026-10-19); 2026 Ammunition Catalog. Remington. remington.com/on/demandware.static/-/Library-Sites-RemingtonSharedLibrary/default/contentDocuments/catalog/2026-Catalog-Web.pdf (accessed 2026-10-19)

.30 BR Remington. A Pair of Aces: Greg's Twin 30BRs. AccurateShooter. 6mmbr.com/gunweek082.html; .308×1.5-inch Barnes. Wikipedia. en.wikipedia.org/wiki/.308×1.5-inch_Barnes; Tables of Dimensions of Cartridges and Chambers (TDCC). C.I.P. bobp.cip-bobp.org/en/tdcc_public (accessed 2026-10-19)

30 Nosler. Hardware: 30 Nosler. American Hunter (NRA). americanhunter.org/articles/2016/9/23/hardware-30-nosler/; Nosler cartridges. Wikipedia. en.wikipedia.org/wiki/Nosler_cartridges; 30 Nosler Rifle Cartridges. Nosler. nosler.com/explore/nosler-cartridges/30-nosler-rifle-cartridges (accessed 2026-10-19)

.30 TC. Wikipedia. en.wikipedia.org/wiki/.30_TC; 30 TC 150 gr SST Superformance. Hornady. hornady.com/ammunition/rifle/30-tc-150-gr-sst-superformance (accessed 2026-10-19); 6.5mm Creedmoor. Wikipedia. en.wikipedia.org/wiki/6.5mm_Creedmoor

.30-06 Springfield. Wikipedia. en.wikipedia.org/wiki/.30-06_Springfield; ANSI/SAAMI Z299.4-2025: Voluntary Industry Performance Standards for Pressure and Velocity of Centerfire Rifle Ammunition. SAAMI. saami.org/wp-content/uploads/2026/04/SAAMI-Z299.4-CFR-2025-Centerfire-Rifle-Approved-2-10-2025-2026-04-27.pdf (accessed 2026-10-19)

.30-06 Springfield Ackley Improved. Handloading the .30-06 Ackley Improved. Shooting Times. shootingtimes.com/editorial/handloading-the-30-06-ackley-improved/372483; P. O. Ackley. Wikipedia. en.wikipedia.org/wiki/P._O._Ackley; Tables of Dimensions of Cartridges and Chambers (TDCC). C.I.P. bobp.cip-bobp.org/en/tdcc_public (accessed 2026-10-19)

.30-30 Winchester. Wikipedia. en.wikipedia.org/wiki/.30-30_Winchester; Historical Timeline 1860-1899. Winchester Repeating Arms. winchesterguns.com/news/historical-timeline/1860-1899.html (accessed 2026-10-19)

.30-378 Weatherby Magnum. Wikipedia. en.wikipedia.org/wiki/.30-378_Weatherby_Magnum; Weatherby. weatherby.com/30-378-weatherby-magnum/ (accessed 2026-10-19); Mark V Weathermark. Weatherby. weatherby.com/store/mark-v-weathermark/ (accessed 2026-10-19)

.30-40 Krag. Wikipedia. en.wikipedia.org/wiki/.30-40_Krag; ANSI/SAAMI Z299.4-2025: Voluntary Industry Performance Standards for Pressure and Velocity of Centerfire Rifle Ammunition. SAAMI. saami.org/wp-content/uploads/2026/04/SAAMI-Z299.4-CFR-2025-Centerfire-Rifle-Approved-2-10-2025-2026-04-27.pdf (accessed 2026-10-19)

300 Blackout. .300 AAC Blackout. Wikipedia. en.wikipedia.org/wiki/.300_AAC_Blackout; 300 Blackout Ammo Buyer's Guide: Best Remington Rounds for Hunting & Target Shooting. Remington Ammunition. remington.com/big-green-blog/300-blackout-ammo-buyers-guide.html (accessed 2026-10-19)

.300 H&H Magnum. Wikipedia. en.wikipedia.org/wiki/.300_H&H_Magnum; ANSI/SAAMI Z299.4-2025: Voluntary Industry Performance Standards for Pressure and Velocity of Centerfire Rifle Ammunition. SAAMI. saami.org/wp-content/uploads/2026/04/SAAMI-Z299.4-CFR-2025-Centerfire-Rifle-Approved-2-10-2025-2026-04-27.pdf (accessed 2026-10-19)

.300 Norma Magnum. Wikipedia. en.wikipedia.org/wiki/.300_Norma_Magnum; 300 Norma Mag. Norma Precision. norma-ammunition.com/products/calibers/300-norma-mag (accessed 2026-10-19); Norma Magnum Archives. SAAMI. saami.org/tag/norma-magnum/; Barrett MRAD. Wikipedia. en.wikipedia.org/wiki/Barrett_MRAD

300 PRC. Hardware: Hornady 300 PRC. American Hunter. americanhunter.org/content/hardware-hornady-300-prc/; 300 PRC 225 gr ELD Match. Hornady Manufacturing. hornady.com/ammunition/rifle/300-prc-225-gr-eld-match

.300 Remington SAUM. .300 Remington Short Action Ultra Magnum. Wikipedia. en.wikipedia.org/wiki/.300_Remington_Short_Action_Ultra_Magnum; Core-Lokt, 300 Rem SAUM, 165 Grain, Pointed Soft Point Core Lokt. Remington. remington.com/rifle/shop-by-caliber/shop-all-calibers/29-27954.html (accessed 2026-10-19)

.300 Remington Ultra Magnum. Wikipedia. en.wikipedia.org/wiki/.300_Remington_Ultra_Magnum; Core-Lokt, 300 Rem Ultra Mag, 180 Grain, Pointed Soft Point Core Lokt. Remington. remington.com/rifle/shop-by-caliber/shop-all-calibers/29-27641.html (accessed 2026-10-19); Premier Scirocco, 300 Rem Ultra Mag, 150 Grain, Swift Scirocco Bonded. Remington. remington.com/rifle/shop-by-caliber/shop-all-calibers/29-27950.html (accessed 2026-10-19); Premier Scirocco, 300 Rem Ultra Mag, 180 Grain, Swift Scirocco Bonded. Remington. remington.com/rifle/shop-by-caliber/shop-all-calibers/29-27936.html (accessed 2026-10-19)

.300 Ruger Compact Magnum. Wikipedia. en.wikipedia.org/wiki/.300_Ruger_Compact_Magnum; Hornady Ruger Compact Magnum Cartridge Review. Hornady. press.hornady.com/release/2008/10/03/ruger-compact-magnum-cartridges-review/ (accessed 2026-10-19)

.300 Savage. Wikipedia. en.wikipedia.org/wiki/.300_Savage; ANSI/SAAMI Z299.4-2025: Voluntary Industry Performance Standards for Pressure and Velocity of Centerfire Rifle Ammunition. SAAMI. saami.org/wp-content/uploads/2026/04/SAAMI-Z299.4-CFR-2025-Centerfire-Rifle-Approved-2-10-2025-2026-04-27.pdf (accessed 2026-10-19)

.300 Weatherby Magnum. Wikipedia. en.wikipedia.org/wiki/.300_Weatherby_Magnum; Weatherby. weatherby.com/300-weatherby-magnum/ (accessed 2026-10-19); An Ode to the .300 Weatherby Magnum. American Hunter. americanhunter.org/content/an-ode-to-the-300-weatherby-magnum/

.300 Winchester Magnum. Wikipedia. en.wikipedia.org/wiki/.300_Winchester_Magnum; Historical Timeline 1950-1999. Winchester Repeating Arms. winchesterguns.com/news/historical-timeline/1950-1999.html (accessed 2026-10-19)

.300 WSM. .300 Winchester Short Magnum. Wikipedia. en.wikipedia.org/wiki/.300_Winchester_Short_Magnum; Historical Timeline 2000-Present. Winchester Repeating Arms. winchesterguns.com/news/historical-timeline/2000-present.html (accessed 2026-10-19); Behind the Bullet: .300 Winchester Short Magnum. American Hunter. americanhunter.org/content/behind-the-bullet-300-winchester-short-magnum/

.308 Marlin Express. Wikipedia. en.wikipedia.org/wiki/.308_Marlin_Express; 308 Marlin Express 160 gr FTX LEVERevolution. Hornady. hornady.com/ammunition/rifle/308-marlin-express-160-gr-ftx-leverevolution (accessed 2026-10-19); Core-Lokt, 308 Marlin Express, 150 Grain, Core-Lokt Soft Point. Remington. remington.com/rifle/shop-by-caliber/shop-all-calibers/29-27848.html (accessed 2026-10-19); 2026 Ammunition Catalog. Remington. remington.com/on/demandware.static/-/Library-Sites-RemingtonSharedLibrary/default/contentDocuments/catalog/2026-Catalog-Web.pdf (accessed 2026-10-19)

.308 Norma Magnum. Wikipedia. en.wikipedia.org/wiki/.308_Norma_Magnum; Our Heritage Since 1902. Norma Precision. norma-ammunition.com/about-norma/alt-history (accessed 2026-10-19)

.308 Winchester. Wikipedia. en.wikipedia.org/wiki/.308_Winchester; Historical Timeline 1950-1999. Winchester Repeating Arms. winchesterguns.com/news/historical-timeline/1950-1999.html (accessed 2026-10-19)

7.5x55 Swiss. Wikipedia. en.wikipedia.org/wiki/7.5×55mm_Swiss; Tables of Dimensions of Cartridges and Chambers (TDCC). C.I.P. bobp.cip-bobp.org/en/tdcc_public (accessed 2026-10-19)

.325 WSM. Wikipedia. en.wikipedia.org/wiki/.325_WSM; What is the historical timeline for Winchester firearms? Winchester Repeating Arms. winchesterguns.com/support/faq/historical-timeline.html (accessed 2026-10-19)

8mm Remington Magnum. Wikipedia. en.wikipedia.org/wiki/8mm_Remington_Magnum; Tables of Dimensions of Cartridges and Chambers (TDCC). C.I.P. bobp.cip-bobp.org/en/tdcc_public (accessed 2026-10-19); 8mm Rem. Mag. Chuck Hawks. chuckhawks.com/8mmMag.htm

8mm-06. .30-06 Springfield wildcat cartridges. Wikipedia. en.wikipedia.org/wiki/.30-06_Springfield_wildcat_cartridges; Ballistic Studies. ballisticstudies.com/Knowledgebase/8mm-06.html

8x57 IRS. Lapua. lapua.com/cartridges/8x57-irs/; 8×57mm IS. Wikipedia. en.wikipedia.org/wiki/8×57mm_IS; Tables of Dimensions of Cartridges and Chambers (TDCC). C.I.P. bobp.cip-bobp.org/en/tdcc_public (accessed 2026-10-19)

8x57 IS (8mm Mauser). 7.92×57mm Mauser. Wikipedia. en.wikipedia.org/wiki/7.92×57mm_Mauser; ANSI/SAAMI Z299.4-2025: Voluntary Industry Performance Standards for Pressure and Velocity of Centerfire Rifle Ammunition. SAAMI. saami.org/wp-content/uploads/2026/04/SAAMI-Z299.4-CFR-2025-Centerfire-Rifle-Approved-2-10-2025-2026-04-27.pdf (accessed 2026-10-19)

33 Nosler. Wikipedia. en.wikipedia.org/wiki/.33_Nosler; 33 Nosler Rifle Cartridges. Nosler. nosler.com/explore/nosler-cartridges/33-nosler-rifle-cartridges (accessed 2026-10-19); Introducing the 33 Nosler. American Hunter. americanhunter.org/articles/2017/1/19/introducing-33-nosler/

338 ARC. Introducing Hornady's New 338 ARC. Firearms News. firearmsnews.com/editorial/Introducing-Hornady-New-338-ARC/513584; Hornady Manufacturing Archives. SAAMI. saami.org/tag/hornady-manufacturing/; A Closer Look at 338 ARC. Gun Digest. gundigest.com/gear-ammo/ammunition/338-arc-hornady

.338 Federal. Wikipedia. en.wikipedia.org/wiki/.338_Federal; Great 338 Ammo. Federal Premium Ammunition. federalpremium.com/its-federal-season/the-great-338.html (accessed 2026-10-19); Federal Transforms Rifle Ammunition. Federal Premium Ammunition. federalpremium.com/the-federal-story/federal-transforms-rifle-ammunition.html (accessed 2026-10-19)

.338 Lapua Magnum. Wikipedia. en.wikipedia.org/wiki/.338_Lapua_Magnum; The story of .338 Lapua Magnum, part 2. Lapua. lapua.com/the-story-of-338-lapua-magnum-part-2/ (accessed 2026-10-19); The story of .338 Lapua Magnum, pt 1. Lapua. lapua.com/the-story-of-338-lapua-magnum-pt-1/ (accessed 2026-10-19)

.338 Norma Magnum. Wikipedia. en.wikipedia.org/wiki/.338_Norma_Magnum; 338 Norma Mag. Norma Precision. norma-ammunition.com/products/calibers/338-norma-mag (accessed 2026-10-19)

.338 Remington Ultra Magnum. Wikipedia. en.wikipedia.org/wiki/.338_Remington_Ultra_Magnum; Core-Lokt, 338 Rem Ultra Mag, 250 Grain, Pointed Soft Point Core Lokt. Remington. remington.com/rifle/shop-by-caliber/shop-all-calibers/29-27942.html (accessed 2026-10-19)

.338 Ruger Compact Magnum. Wikipedia. en.wikipedia.org/wiki/.338_Ruger_Compact_Magnum; Hornady Ruger Compact Magnum Cartridge Review. Hornady. press.hornady.com/release/2008/10/03/ruger-compact-magnum-cartridges-review/ (accessed 2026-10-19)

.338 Winchester Magnum. Wikipedia. en.wikipedia.org/wiki/.338_Winchester_Magnum; Historical Timeline 1950-1999. Winchester Repeating Arms. winchesterguns.com/news/historical-timeline/1950-1999.html (accessed 2026-10-19)

.338-06. Wikipedia. en.wikipedia.org/wiki/.338-06; .338 Winchester Magnum. Wikipedia. en.wikipedia.org/wiki/.338_Winchester_Magnum

.338-378 Weatherby Magnum. Wikipedia. en.wikipedia.org/wiki/.338-378_Weatherby_Magnum; Weatherby. weatherby.com/338-378-weatherby-magnum/ (accessed 2026-10-19)

.340 Weatherby Magnum. Wikipedia. en.wikipedia.org/wiki/.340_Weatherby_Magnum; Weatherby. weatherby.com/340-weatherby-magnum

.35 Remington. Wikipedia. en.wikipedia.org/wiki/.35_Remington; 360 Buckhammer VS 30-30, 400 Legend and 35 Remington. Remington. remington.com/big-green-blog/360-buckhammer-vs-3030-400legend-35remington.html (accessed 2026-10-19)

.35 Whelen. Wikipedia. en.wikipedia.org/wiki/.35_Whelen; Core-Lokt, 35 Whelen, 200 Grain, Pointed Soft Point Core Lokt. Remington. remington.com/rifle/shop-by-caliber/shop-all-calibers/29-21495.html (accessed 2026-10-19); High Performance Rifle, 35 Whelen, 250 Grain, Pointed Soft Point. Remington. remington.com/rifle/shop-by-caliber/shop-all-calibers/29-21499.html (accessed 2026-10-19)

.350 Remington Magnum. Wikipedia. en.wikipedia.org/wiki/.350_Remington_Magnum; Unprimed Rifle Brass, .350 Rem. Magnum. Remington. remington.com/handloading/brass/29-22902.html (accessed 2026-10-19); Wolfe Publishing. loaddata.com/Article/BenchTopics/350-Remington-Magnum/167

.356 Winchester. Wikipedia. en.wikipedia.org/wiki/.356_Winchester; 356 Winchester, 200 Grain. Winchester Ammunition. winchester.com/Products/Ammunition/Rifle/Super-X/X3561 (accessed 2026-10-19)

.358 Norma Magnum. Wikipedia. en.wikipedia.org/wiki/.358_Norma_Magnum; Our Heritage Since 1902. Norma Precision. norma-ammunition.com/about-norma/alt-history (accessed 2026-10-19); Behind the Bullet: .358 Norma Magnum. American Hunter.

americanhunter.org/content/behind-the-bullet-358-norma-magnum/

.358 Winchester. Wikipedia. en.wikipedia.org/wiki/.358_Winchester; 358 Winchester, 200 Grain. Winchester Ammunition. winchester.com/Products/Ammunition/Rifle/Power-Point/X3582 (accessed 2026-10-19)

.375 Holland & Holland Magnum. .375 H&H Magnum. Wikipedia. en.wikipedia.org/wiki/.375_H&H_Magnum; ANSI/SAAMI Z299.4-2025: Voluntary Industry Performance Standards for Pressure and Velocity of Centerfire Rifle Ammunition. SAAMI. saami.org/wp-content/uploads/2026/04/SAAMI-Z299.4-CFR-2025-Centerfire-Rifle-Approved-2-10-2025-2026-04-27.pdf (accessed 2026-10-19)

.375 Remington Ultra Magnum. Wikipedia. en.wikipedia.org/wiki/.375_Remington_Ultra_Magnum; High Performance Rifle, 375 Rem Ultra Magnum, 270 Grain, Soft Point. Remington. remington.com/rifle/high-performance-rifle/29-29340.html (accessed 2026-10-19)

.375 Ruger. Wikipedia. en.wikipedia.org/wiki/.375_Ruger; Ruger Announces M77 Hawkeye Rifles Chambered in the New .375 Ruger Caliber. Ruger. ruger.com/news/2006-11-07f.html (accessed 2026-10-19)

.375 Weatherby Magnum. Wikipedia. en.wikipedia.org/wiki/.375_Weatherby_Magnum; Weatherby. weatherby.com/375-weatherby-magnum/ (accessed 2026-10-19); Which .375 Should You Choose? Sports Afield. sportsafield.com/2017/which-375-should-you-choose/

.378 Weatherby Magnum. Wikipedia. en.wikipedia.org/wiki/.378_Weatherby_Magnum; Weatherby. weatherby.com/store/378-weatherby-magnum/ (accessed 2026-10-19); The .378 Weatherby Magnum. Shooting Times. shootingtimes.com/editorial/378-weatherby-magnum/390467

.460 Weatherby Magnum. Wikipedia. en.wikipedia.org/wiki/.460_Weatherby_Magnum; Weatherby. weatherby.com/store/460-weatherby-magnum/ (accessed 2026-10-19)

Index

A

Ackley Improved 80, 83–84, 175
Annealing 10, 33, 40–41, 58, 86–87, 109–112

B

Backups 148
Ball powder 46, 60, 64, 81, 170
Ballistic coefficient 71–72, 75, 171, 677
Ballistic solver 52, 154
Barrel contour 14–16, 19, 24
Barrel length 9, 14, 20–21, 24, 79–81
Barrel tuner 155, 158–159
Barrel wear 14, 16–17, 74, 122, 141, 160, 163
Baseline 14, 18, 24, 32, 52, 59, 144, 165
Base-to-shoulder comparator 27, 32, 48, 87–88, 96, 112, 144
BC *see* Ballistic coefficient
Beam scale 45, 118
Bearing surface 10, 15, 25–26, 37, 71, 73–74
Berdan primer 86, 91–92, 113, 135
Block 33, 38, 96, 112, 115, 119, 121, 145
Boat tail 26, 66, 71–73
Book maximum 82–83, 145, 149–151, 154, 175
Boxer primer 92
Brass batch 89–90, 108, 110, 112, 143–144
Bullet comparator 48–49, 75, 88, 122–123, 132, 143
Bullet puller 32, 38, 131
Bump *see* Shoulder bump
Burn rate 9, 63–65, 69, 78, 81, 120
Bushing die 33, 36, 95, 99

C

Caliper 22, 27, 32, 48, 73, 81, 96, 123
Cant 32, 52, 172
Case capacity 25, 54–55, 57–58, 66, 82, 84
Case fill 66–68, 81, 118, 121, 170
Case gauge 32, 48–49, 98, 124, 130–131, 135
Case lube 34, 38–39, 86, 97, 104, 110, 167
Case trimming 32–33, 39, 41–42, 86–87, 103–108
Case-head expansion 152
CBTO 26, 48, 122–124, 127–128, 168
Chamber 26–27, 49, 95, 101, 136–137, 139
Chamfer 41–42, 87–89, 94, 106, 108
Check weight 8, 32, 46–47, 55, 119, 168, 678
Chronograph 50–51, 142, 145–146, 150, 170, 678
C.I.P. 25, 28–30, 49, 78–79, 676
COAL 122–123, 125, 128, 132, 168, 175, 678
Common questions 175
Composite group 96, 147, 171–175, 676
Compressed load 66–68, 81, 118, 121, 133, 168
Concentricity gauge *see* Runout
Confidence interval 158
Conversions 46, 676
Correlation 171–173
Cratered primer 10, 150–152, 169, 678
Crimp, bullet 37–38, 87, 92, 127, 129, 137, 168
Crimp, primer pocket 41–42, 44, 61, 86, 88, 113–114
Crown 14–15, 17–18, 20
CUP 25, 30, 77–78, 676

D

Datum 26–27, 32, 41, 48–49
Degrees of freedom 676
Deprime 10, 39, 86–91
DOPE card 81, 147, 154
Doppler 32, 50–52, 150, 170
Double charge 8–9, 13, 63, 67–68, 118, 121
Drag model 73, 171
Drop chart 6–7, 22, 52, 75, 147, 161–162
Dummy round 23, 82, 87–88, 121, 123, 125, 127

E

Ejector mark 10, 91, 135, 151–152, 169, 678
Electronic scale 45, 47, 118
Expander mandrel 19, 32–33, 36–37, 99–100, 104
Extruded powder 45–46, 60, 63–64, 68, 120, 168

F

Fire-forming 83–84
Firing pin 10–11, 25, 27, 59–60, 134, 136
Flash hole 39–40, 42, 60, 91, 113–115
Flat base 37, 49, 73, 87, 106, 108, 129
Flattened primer 10, 149–152, 169, 678
Flyer 2, 4, 169–170, 173–174
Form factor 677
Fouler 81, 142, 144–147, 150

Freebore 26–28, 84, 122, 125
F-test 112, 172
Full-case load 67–68, 81, 175
Full-length sizing 36, 83, 95–98, 135–136

G

G1 and G7 73, 75
Gas gun *see* Semi-automatic rifle
Gas port 134, 138–139, 175
Group size 3, 5, 18, 33, 51, 100, 102, 157

H

Head separation 10, 33, 48–49, 90, 92–93, 166
Headspace 25–27, 83, 95, 130, 136, 152
Headstamp 55, 86, 88, 90–91, 114
Hit probability 6–7
Humidity 70, 130, 133, 171
Hybrid ogive 37, 127

I

Instrument error 50
Interference *see* Neck tension
Interleaving 33, 51, 96, 112, 115, 129, 154, 161

J

Jump 74, 122, 124–127, 158, 163

K

Keyhole 171
Kit list 32

L

Ladder test 5, 155–159
Lands 14, 26, 49, 122, 124–126, 163
Law of Large Numbers 2, 4
Lead safety 11, 37, 39–40, 91
Line of sight 22
Load data *see* Published data
Loading block 9, 32, 34, 38, 97, 137
Lots 9, 55, 61, 69, 75, 132, 143, 162
Lube dent 92, 97, 167

M

Mach 80, 677
Magazine length 14, 22–23, 82, 125, 127, 136, 143
Mandrel *see* Expander mandrel
MAP *see* Maximum average pressure
Maximum average pressure 30, 83
Mean point of impact 676
Mean radius 5–6, 18, 33, 112, 157, 171, 676
Meplat 37, 71–72, 75
Mil 676
Miller twist rule 80
MOA 15, 18, 22, 157, 676
Molten salt 10, 43, 110
Monolithic bullet 10, 71–74, 122, 127, 158
Mouth flare 37–38, 73, 87, 106–108, 129
MPI *see* Mean point of impact
MR *see* Mean radius
Muzzle velocity 20, 73, 100, 147, 171, 173

N

Neck sizing 35–36, 95–96, 135
Neck tension 33, 36–37, 95, 98, 100, 168, 173
Node 128, 155–158

O

Ogive 26, 37, 48, 71–72, 122–123, 127
Optimal charge weight 155–157

P

Parallax 45
Pierced primer 10, 150–152, 169–170, 678
Pmax 30
Powder measure 9, 32, 45–47, 678
Powder storage 8, 12–13, 61, 63, 69–70, 130
Pressure signs 8, 59, 91, 149–151, 168–169
Pressure testing 29–30, 79–80, 84, 175
Primer change 59, 61–62, 68, 136, 151, 153–154
Primer pocket 10, 25–26, 42, 54, 59, 113–117, 152
Primer seating 10, 44, 49, 113, 116–117, 130–131
psi 8, 17, 25, 30, 78, 83, 138, 676
Published data 8, 13, 54, 65, 77–81, 83
p-value 112, 676

R

Record keeping 2, 6, 9, 24, 89, 141–148, 162, 170
Reloading press 19, 34–38, 42–44, 88–89, 116
Rifling 14–15, 18–21, 26, 28
Rounds' worth 33
Runout 32, 37, 48–49, 100–102, 168

S

SAAMI 8, 25, 28–30, 49, 78, 125
Safety glasses 8, 13, 44, 113, 678
Sample size 33, 109, 158, 175
SD *see* Standard deviation
Seating depth 2, 25, 37–38, 49, 72, 128, 158
Seating die 23, 32, 34–35, 37, 88, 102, 129
Sectional density 677
Semi-automatic rifle 10, 23, 36, 60–61, 98, 134–139, 169
Session 8, 142–143, 145–147, 162, 164
Setback 129, 136–137
Sg *see* Stability
Shell holder 34–36, 38, 41, 43–44, 97
Shoulder bump 58, 87, 93, 95–103, 108, 135, 167
Sight height 14, 22, 24, 143–144
Sighter 142, 144–147
Slam fire 60, 136–137, 167
Speed of sound 80
Spin drift 21
Squib 11, 139, 150, 168–169, 678
Stability 6, 21, 25, 73–75, 80–81
Standard deviation 51, 112, 120, 158, 161, 170–172
Start load 9, 54, 74, 77–79, 150, 678
Static charge 8, 44–45, 47
Station pressure 32, 50, 52, 145
Stringing 166, 170–171, 173

T

Temperature sensitivity 50, 52, 69, 143, 145, 147, 160, 162
Throat 14, 16–17, 26, 78, 103, 130, 163
Throat erosion *see* Barrel wear
Time of flight 172
Trickler 32, 45–47, 119
Trim *see* Case trimming
Tumbler 11, 39, 91
Turret press 34, 36
Twist rate 19, 21, 24

U

Ultrasonic cleaner 39–40

V

Velocity ceiling 9, 20, 83–84, 149, 151, 153, 163
Velocity goal 80, 151, 153, 157
Velocity SD *see* Standard deviation

W

Water capacity *see* Case capacity
Wildcat 80, 83–84, 175
Wind drift 71
Work-up 9, 50, 81–82, 142, 153–154, 678

Y
Yaw 17–18

Z
Zero distance 22, 154

Cartridges (Part X pages in bold)

5.56x45mm NATO **275**, 206
6 GT **299**, 206
6mm ARC **305**, 206
6mm BR **310**, 206
6mm Creedmoor **316**, 206
6mm Dasher **322**, 206
6mm PPC **326**, 206
6mm Remington **331**, 206
6mm XC **337**, 206
6mm-284 **342**, 206
6x45 (6mm-223) **348**, 206
6x47 Lapua **354**, 206
6.5 Creedmoor **389**, 207
6.5 Grendel **392**, 207
6.5 PRC **395**, 207
6.5-284 Norma **397**, 207
6.5-300 Weatherby Magnum **400**, 207
6.5mm BR Remington **401**, 207
6.5mm Carcano **404**, 207
6.5mm Remington Magnum **407**, 207
6.5mm-06 **409**, 207
6.5x47 Lapua **412**, 207
6.5x50 Japanese **415**, 207
6.5x55 Swedish **418**, 207
6.5x57 Mauser **421**, 207
6.8 Western **432**, 207
6.8mm Remington SPC **434**, 207
7-30 Waters **452**, 207
7mm BR Remington **456**, 207
7mm PRC **460**, 207
7mm Remington Magnum **463**, 207
7mm Remington SAUM **468**, 207
7mm RUM **472**, 207
7mm STW **476**, 207
7mm Weatherby Magnum **480**, 207
7mm WSM **484**, 207
7mm-08 Remington **488**, 207
7x57 Mauser **492**, 207
7x64 Brenneke **496**, 207
7x65R **499**, 207
7.5x55 Swiss **595**, 208
8mm Remington Magnum **601**, 208
8mm-06 **604**, 208
8x57 IRS **606**, 208
8x57 IS (8mm Mauser) **608**, 208
22 ARC **215**, 206
.22 BR Remington **219**, 206
22 Creedmoor **224**, 206
.22 Hornet **228**, 206
22 Nosler **230**, 206
.22 PPC USA **236**, 206
.22-250 Remington **238**, 206
24 Nosler **278**, 206
25 Creedmoor **359**, 206
.25 WSSM **362**, 206
.25-06 Remington **364**, 206
.25-20 Winchester **367**, 206
26 Nosler **379**, 207
28 Nosler **437**, 207
.30 AR Remington **501**, 207
.30 BR Remington **503**, 207
30 Nosler **506**, 207
.30 TC **510**, 207
.30-06 Springfield **513**, 207
.30-06 Springfield Ackley Improved **518**, 207
.30-30 Winchester **522**, 207
.30-378 Weatherby Magnum **525**, 207
.30-40 Krag **529**, 207
33 Nosler **611**, 208
.35 Remington **649**, 208
.35 Whelen **651**, 208
.218 Bee **210**, 206
.219 Zipper **213**, 206
.220 Swift **244**, 206
.222 Remington **249**, 206
.222 Remington Magnum **252**, 206
.223 Remington **255**, 206
.223 WSSM **260**, 206
.224 Valkyrie **265**, 206
.224 Weatherby Magnum **269**, 206
.225 Winchester **272**, 206
.240 Weatherby Magnum **281**, 206
.243 Winchester **286**, 206
.243 WSSM **292**, 206
.250 Savage **368**, 206
.256 Winchester Magnum **371**, 206
.257 Roberts **373**, 206
.257 Weatherby Magnum **376**, 206
.260 Remington **382**, 207
.264 Winchester Magnum **385**, 207
.270 Weatherby Magnum **424**, 207
.270 Winchester **427**, 207
.270 WSM **430**, 207
.280 Ackley Improved **442**, 207
.280 Remington **445**, 207
.284 Winchester **449**, 207
300 Blackout **533**, 207
.300 H&H Magnum **537**, 207
.300 Norma Magnum **542**, 207
300 PRC **546**, 208
.300 Remington SAUM **550**, 208
.300 Remington Ultra Magnum **555**, 208
.300 Ruger Compact Magnum **560**, 208
.300 Savage **564**, 208
.300 Weatherby Magnum **567**, 208
.300 Winchester Magnum **572**, 208
.300 WSM **577**, 208
.308 Marlin Express **582**, 208
.308 Norma Magnum **585**, 208
.308 Winchester **590**, 208
.325 WSM **598**, 208
338 ARC **615**, 208
.338 Federal **617**, 208
.338 Lapua Magnum **620**, 208
.338 Norma Magnum **624**, 208
.338 Remington Ultra Magnum **627**, 208
.338 Ruger Compact Magnum **631**, 208
.338 Winchester Magnum **634**, 208
.338-06 **638**, 208
.338-378 Weatherby Magnum **641**, 208
.340 Weatherby Magnum **645**, 208
.350 Remington Magnum **653**, 208
.356 Winchester **655**, 208
.358 Norma Magnum **657**, 208
.358 Winchester **659**, 208
.375 Holland & Holland Magnum **661**, 208
.375 Remington Ultra Magnum **664**, 208
.375 Ruger **667**, 208
.375 Weatherby Magnum **670**, 208
.378 Weatherby Magnum **672**, 208
.460 Weatherby Magnum **674**, 208

Bullet Weights (simulated tables by caliber)

.224 Caliber (5.56mm) 35 gr 176, 210, 230, 238, 244, 249, 255, 260; **40 gr** 176, 211, 215, 219, 228, 231, 236, 239, 245, 250, 252, 256, 261, 269, 272; **45 gr** 176, 211, 213, 220, 231, 239, 245, 253, 256, 261, 273; **50 gr** 176, 177, 212, 214, 216, 220, 229, 232, 237, 240, 246, 250, 253, 257, 262, 270, 273; **52 gr** 177, 224, 265; **55 gr** 177, 178, 212, 214, 216, 221, 225, 229, 232, 237, 240, 246, 251, 254, 257, 262, 266, 270, 274, 275; **60 gr** 178, 221, 233, 241, 247, 251, 254, 258, 263, 266, 271, 274, 276; **62 gr** 178, 217, 225; **63 gr** 178, 222, 271; **64 gr** 178, 233, 241, 263; **65 gr** 178, 267; **69 gr** 178, 217, 222, 226, 234, 242, 247, 258, 267; **70 gr** 178, 264, 276; **75 gr** 178, 179, 226, 242, 277; **77 gr** 179, 218, 223, 234, 248, 259, 264, 268; **80 gr** 179, 227, 243, 277; **85 gr** 179, 235; **90 gr** 179, 218, 223, 227, 235, 243, 248, 259, 268.

.243 Caliber (6mm) 55 gr 179, 286, 293, 310, 316, 326, 331, 342; **58 gr** 179, 281, 287, 293, 305; **60 gr** 179, 311, 322, 327, 332, 337, 343, 349; **65 gr** 179, 299, 327, 332; **70 gr** 180, 278, 282, 287, 294, 300, 306, 311, 317, 323, 328, 333, 338, 343, 349, 354; **75 gr** 180, 282, 288, 294, 300, 312, 317, 328, 333, 344, 350, 355; **80 gr** 180, 279, 283, 288, 295, 301, 306, 312, 318, 329, 334, 338, 344, 350, 355; **85 gr** 180, 279, 283, 289, 295, 301, 307, 313, 318, 329, 334, 339, 345, 351, 356; **90 gr** 180, 181, 280, 284, 289, 296, 302, 307, 313, 319, 323, 330, 335, 339, 345, 351, 356; **95 gr** 181, 284, 290, 296, 302, 308, 314, 319, 324, 335, 340, 346, 352, 357; **100 gr** 181, 285, 290, 297, 303, 308, 314, 320, 324, 330, 336, 340, 346, 352, 357; **105 gr** 181, 280, 285, 291, 297, 303, 309, 315, 320, 325, 336, 341, 347, 353, 358; **110 gr** 181, 182, 304, 309, 321; **115 gr** 182, 291, 298, 304, 315, 321, 325, 341, 347, 358.

.257 Caliber (6.35mm) 60 gr 182, 367, 371; **75 gr** 182, 362, 364, 368, 372, 373, 376; **87 gr** 182, 365, 372, 374, 377; **90 gr** 182, 359, 369; **100 gr** 182, 360, 363, 365, 369, 374, 377; **110 gr** 182, 360, 366, 370, 375; **115 gr** 182, 183, 378; **117 gr** 183, 361, 363, 366, 370, 375; **120 gr** 183, 378; **134 gr** 183, 361.

.264 Caliber (6.5mm) 85 gr 183, 401, 404, 421; **90 gr** 183, 392; **100 gr** 183, 379, 382, 385, 389, 393, 397, 402, 405, 407, 409, 415, 418, 422; **107 gr** 183, 386, 402, 412, 422; **120 gr** 184, 380, 383, 386, 390, 393, 395, 398, 403, 405, 410, 413, 416, 419, 423; **129 gr** 184, 380, 408, 416; **130 gr** 184, 383, 387, 390, 394, 398, 410, 413, 419; **140 gr** 185, 381, 384, 387, 391, 394, 396, 399, 400, 403, 406, 408, 411, 414, 417, 420, 423; **150 gr** 185, 384, 388, 391, 396, 399, 411, 414; **153 gr** 185, 381; **160 gr** 186, 388, 406, 417, 420.

.277 Caliber (6.8mm) 85 gr 186, 434; **90 gr** 186, 435; **100 gr** 186, 424, 427, 435; **110 gr** 186, 425, 428, 430, 436; **130 gr** 186, 187, 425, 428, 431, 432, 436; **140 gr** 187, 426, 429, 433; **150 gr** 187, 426, 429, 431; **175 gr** 187, 433.

.284 Caliber (7mm) 100 gr 188, 456; **110 gr** 188, 484, 492; **120 gr** 188, 437, 442, 445, 449, 452, 457, 463, 468, 472, 476, 480, 485, 488, 493, 496; **130 gr** 188, 438, 446, 453, 457, 464, 469, 473, 481, 489; **139 gr** 188, 450, 453, 460, 473, 499; **140 gr** 188, 438, 443, 446, 458, 464, 469, 477, 481, 485, 489, 493, 497; **145 gr** 188, 454; **150 gr** 188, 189, 439, 443, 447, 450, 458, 461, 465, 470, 474, 477, 482, 486, 490, 494, 497, 500; **154 gr** 189, 454; **160 gr** 189, 439, 447, 459, 461, 465, 474, 478, 482, 486, 490, 494, 498; **162 gr** 189, 444, 451, 455, 470; **168 gr** 189, 190, 440, 448, 466, 475, 478, 483, 487, 491, 495; **175 gr** 190, 440, 444, 448, 451, 455, 459, 462, 466, 471, 475, 479, 483, 487, 491, 495, 498, 500; **183 gr** 190, 441, 467, 471, 479; **190 gr** 190, 462; **197 gr** 190, 441, 467.

.308 Caliber (7.62mm) 100 gr 190, 522; **110 gr** 190, 191, 501, 503, 510, 513, 518, 523, 529, 533, 537, 550, 560, 564, 572, 577, 585, 591, 595; **125 gr** 191, 511, 514, 519, 533, 538, 551, 555, 561, 565, 567, 573, 578, 582, 586, 591; **130 gr** 191, 523, 530; **135 gr** 191, 534; **140 gr** 191, 583; **150 gr** 191, 192, 502, 504, 506, 511, 514, 519, 524, 530, 534, 538, 551, 556, 561, 565, 568, 573, 578, 583, 586, 592, 596; **155 gr** 192, 193, 525, 546; **160 gr** 193, 502, 584; **165 gr** 193, 504, 507, 512, 515, 520, 526, 531, 534, 539, 547, 552, 556, 562, 566, 568, 574, 579, 587, 592, 596; **170 gr** 193, 194, 524, 584; **175 gr** 194, 542; **180 gr** 194, 195, 505, 507, 512, 515, 520, 526, 531, 535, 539, 547, 552, 557, 562, 566, 569, 574, 579, 587, 593, 597; **190 gr** 195, 516, 527, 535, 540, 543, 548, 557, 569, 588; **200 gr** 195, 196, 505, 508, 516, 521, 527, 532, 535, 540, 543, 548, 553, 558, 563, 570, 575, 580, 588, 593; **210 gr** 196, 508, 517, 536, 541, 544, 553, 558, 570, 575, 580, 594, 597; **220 gr** 196, 509, 517, 521, 528, 532, 536, 541, 544, 549, 554, 559, 563, 571, 576, 581, 589; **230 gr** 196, 509, 528, 536, 545, 549, 554, 559, 571, 576, 581, 589; **250 gr** 196, 545.

.323 Caliber (8.2mm) 150 gr 196, 598, 601, 604, 608; **170 gr** 197, 599, 602, 609; **180 gr** 197, 599, 602, 606, 609; **196 gr** 197, 607; **200 gr** 197, 600, 603, 605, 610; **220 gr** 197, 600, 603, 605, 607, 610.

.338 Caliber (8.6mm) 180 gr 197, 611; **185 gr** 197, 617, 620, 627, 631, 634, 638, 641, 645; **200 gr** 197, 612, 615, 618, 621, 628, 632, 635, 639, 642, 646; **210 gr** 197, 612, 618, 621, 628, 632, 635, 639, 642; **215 gr** 197, 624, 646; **225 gr** 198, 613, 615, 619, 622, 625, 629, 633, 636, 640, 643, 647; **250 gr** 198, 613, 616, 619, 622, 625, 629, 633, 636, 640, 643, 647; **265 gr** 198, 614, 630, 637, 648; **270 gr** 198, 616; **275 gr** 198, 644; **280 gr** 198, 626; **285 gr** 198, 623; **300 gr** 198, 614, 616, 623, 626, 630, 637, 644, 648.

.358 Caliber (9.1mm) 158 gr 199, 649; **180 gr** 199, 651, 653, 655, 657, 659; **200 gr** 199, 650, 652, 654, 656; **220 gr** 199, 650, 656; **225 gr** 199, 658, 660; **250 gr** 199, 652, 654, 658, 660.

.375 Caliber (9.5mm) 220 gr 199, 661; **225 gr** 199, 670; **235 gr** 199, 662, 664, 667, 671, 672; **250 gr** 199, 662, 668; **260 gr** 199, 665; **270 gr** 199, 663, 668, 673; **285 gr** 200, 665; **300 gr** 200, 663, 666, 669, 671, 673; **350 gr** 200, 666, 669.

.458 Caliber (11.63mm) 350 gr 200, 674; **450 gr** 200, 675; **500 gr** 201, 675.

Powders

Accurate 1680 202; 2015 203; 2200 202; 2230 203; 2460 203; 2495 203; 2520 203; 2700 204; 3100 204; 4064 203; 4100 202; 4350 204; 5744 202; LT-30 202; LT-32 202; MagPro 204; No. 9 202; No. 11FS 202.

Alliant 2400 202; AR-Comp 203; Power Pro 300-MP 202; Power Pro 1200-R 202; Power Pro 2000-MR 203; Power Pro 4000-MR 204; Power Pro Varmint 203; Reloder 7 202; Reloder 10x 202; Reloder 15 203; Reloder 16 204; Reloder 17 204; Reloder 19 204; Reloder 22 204; Reloder 23 204; Reloder 25 204; Reloder 26 204; Reloder 33 205; Reloder 50 205; Reloder TS 15.5 203.

Hodgdon Benchmark 203; BL-C(2) 203; CFE 223 203; CFE BLK 202; H50BMG 205; H110 202; H322 203; H335 203; H380 203; H414 204; H1000 204; H4198 202; H4227 202; H4350 204; H4831 204; H4831SC 204; H4895 203; Hybrid 100V 204; Leverevolution 203; Lil'Gun 202; Retumbo 204; SUPERFORMANCE 204; Trail Boss 202; US 869 205; Varget 203.

IMR 3031 203; 4007 SSC 204; 4064 203; 4166 203; 4198 202; 4227 202; 4320 203; 4350 204; 4451 204; 4831 204; 4895 203; 4955 204; 7828 204; 7828SSC 204; 7977 204; 8133 205; 8208 XBR 203.

Norma 200 202; 201 203; 202 203; 203B 203; 204 204; 217 204; MRP 204; R123 202; URP 204.

Ramshot Big Game 204; Grand 204; Hunter 204; LRT 205; Magnum 204; TAC 203; X-Terminator 203.

Reload Swiss RS30 202; RS36 202; RS40 203; RS50 203; RS52 203; RS60 203; RS62 204; RS70 204; RS76 204; RS80 204.

Shooters World AR Plus 203; Blackout 202; Long Rifle 203; Match Rifle 203; Precision Rifle 203; SBR-SOCOM 202; SW4350 204; Tactical Rifle 203; The Creed 203; The Patriot 203.

Vihtavuori 20N29 205; 24N41 205; N105 202; N110 202; N120 202; N130 202; N133 202; N135 203; N140 203; N150 203; N160 204; N165 204; N170 204; N530 203; N540 203; N550 203; N555 204; N560 204; N565 204; N568 205; N570 205.

Winchester 748 203; 760 204; StaBALL 6.5 204; StaBALL HD 205; StaBALL Match 203; Supreme 780 204.

Reference Sections

Burn rate order 202; Cartridge dimensions 206; Conversions 676; Glossary 688; Manufacturer directory 679; Notes 680; Powder specifications 202; Projectile directory 176; Safety card 678; Simulated load ladders 209; Sources 690; Statistics and formulas 676.